Z.ONE.DATSUN

GENERAL INFORMATION

SECTION GI

CONTENTS

PRECAUTIONS ..... GI- 2
HOW TO USE THIS MANUAL ..... GI- 6
HOW TO READ WIRING DIAGRAMS ..... GI- 8
HOW TO FOLLOW FLOW CHART IN TROUBLE DIAGNOSES GI-12
CONSULT CHECKING SYSTEM GI-16
IDENTIFICATION INFORMATION GI-18
LIFTING POINTS AND TOW TRUCK TOWING GI-22
TIGHTENING TORQUE OF STANDARD BOLTS GI-25

Z.ONE.DATSUN

PRECAUTIONS

Observe the following precautions to ensure safe and proper servicing. These precautions are not described in each individual section.

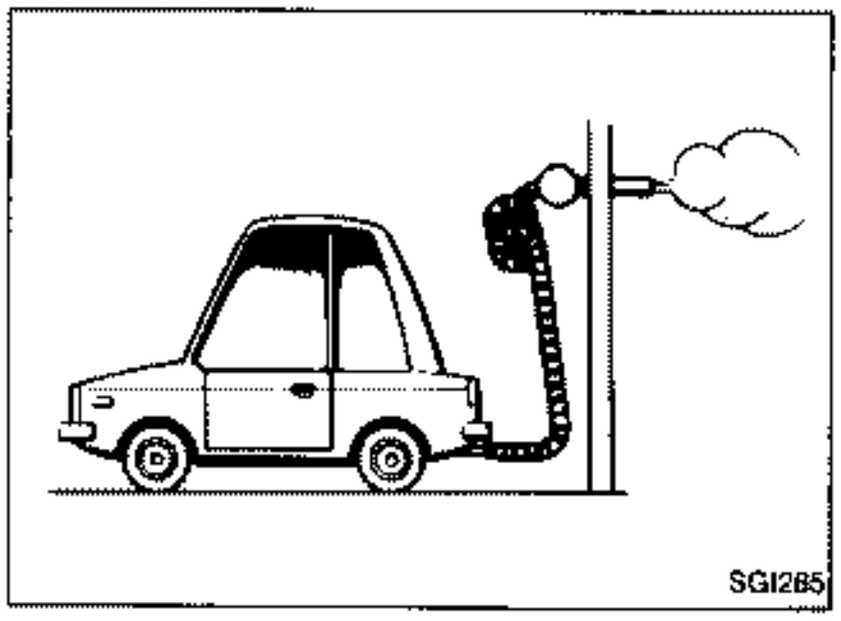
SGI265

1. Do not operate the engine for an extended period of time without proper exhaust ventilation.
   Keep the work area well ventilated and free of any inflammable materials. Special care should be taken when handling any inflammable or poisonous materials, such as gasoline, refrigerant gas, etc. When working in a pit or other enclosed area, be sure to properly ventilate the area before working with hazardous materials.
   Do not smoke while working on the vehicle.

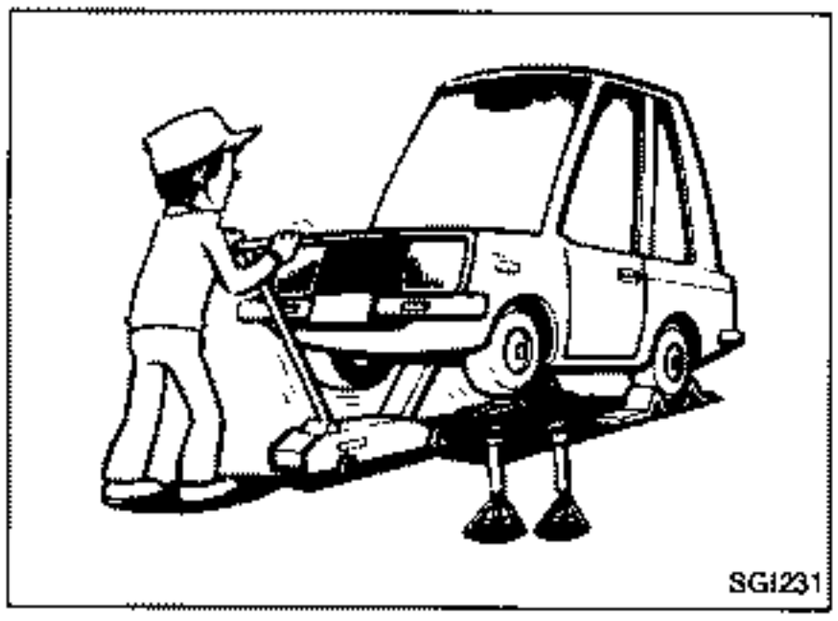
SGI231

2. Before jacking up the vehicle, apply wheel chocks or other tire blocks to the wheels to prevent the vehicle from moving. After jacking up the vehicle, support the vehicle weight with safety stands at the points designated for proper lifting and towing before working on the vehicle.
   These operations should be done on a level surface.
3. When removing a heavy component such as the engine or transaxle/transmission, be careful not to lose your balance and drop them. Also, do not allow them to strike adjacent parts, especially the brake tubes and master cylinder.

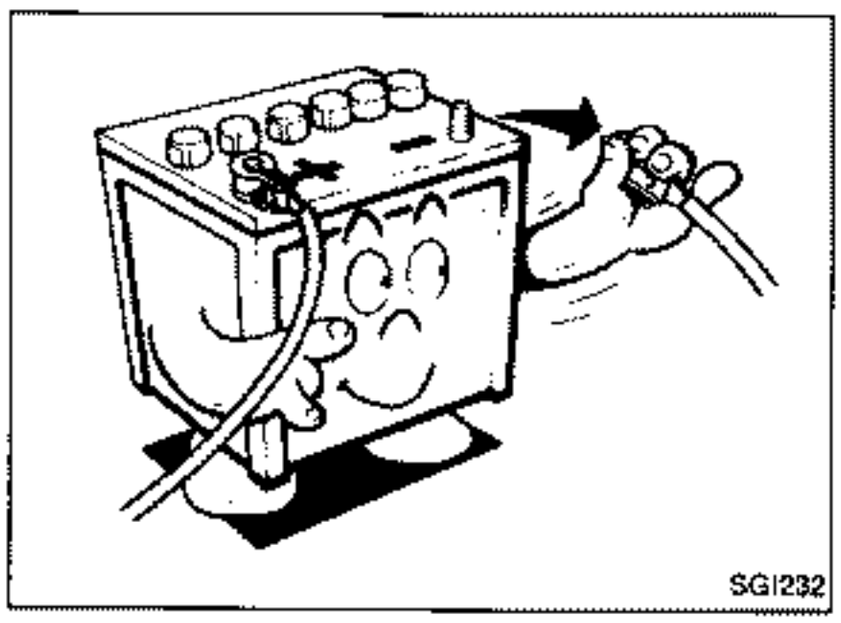
SGI232

4. Before starting repairs which do not require battery power, always turn off the ignition switch, then disconnect the ground cable from the battery to prevent accidental short circuit.

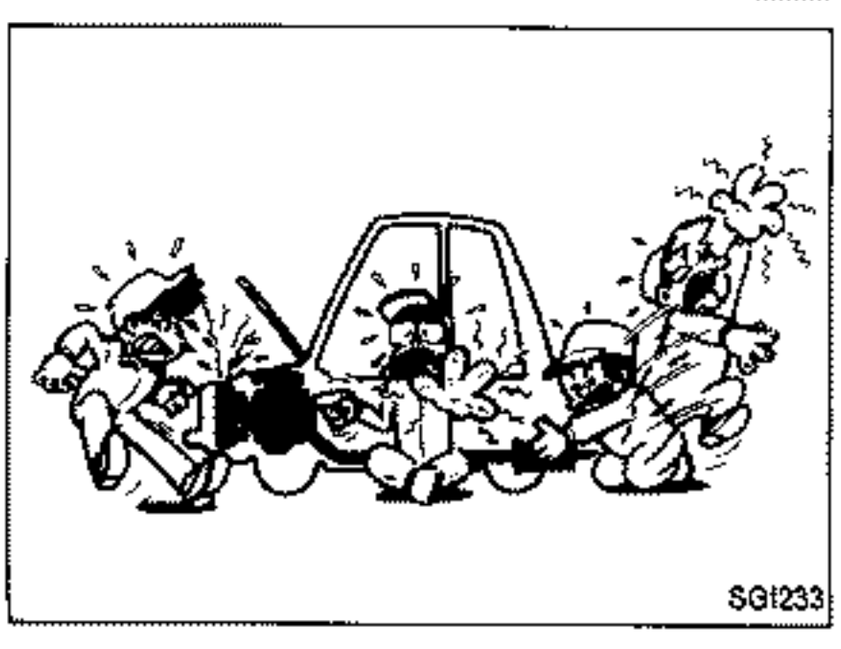
SGI233

5. To prevent serious burns, avoid contact with hot metal parts such as the radiator, exhaust manifold, tail pipe and muffler. Do not remove the radiator cap when the engine is hot.

Z.ONE.DATSUN

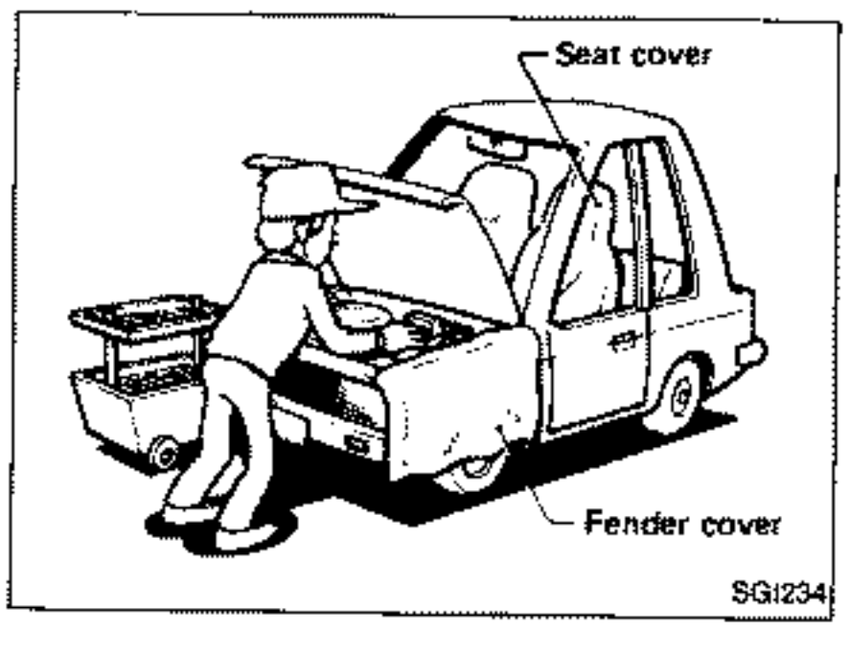

6. Before servicing the vehicle, protect fenders, upholstery and carpeting with appropriate covers.
   Take caution that keys, buckles or buttons on your person do not scratch the paint.
7. Clean all disassembled parts in the designated liquid or solvent prior to inspection or assembly.
8. Replace oil seals, gaskets, packings, O-rings, locking washers, cotter pins, self-locking nuts, etc. with new ones.
9. Replace inner and outer races of tapered roller bearings and needle bearings as a set.
10. Arrange the disassembled parts in accordance with their assembled locations and sequence.
11. Do not touch the terminals of electrical components which use microcomputers (such as electronic control units). Static electricity may damage internal electronic components.
12. After disconnecting vacuum or air hoses, attach a tag to indicate the proper connection.
13. Use only the lubricants specified in MA section.
14. Use approved bonding agent, sealants or their equivalents when required.
15. Use tools and recommended special tools where specified for safe and efficient service repairs.
16. When repairing the fuel, oil, water, vacuum or exhaust systems, check all affected lines for leaks.
17. Dispose of drained oil or the solvent used for cleaning parts in an appropriate manner.

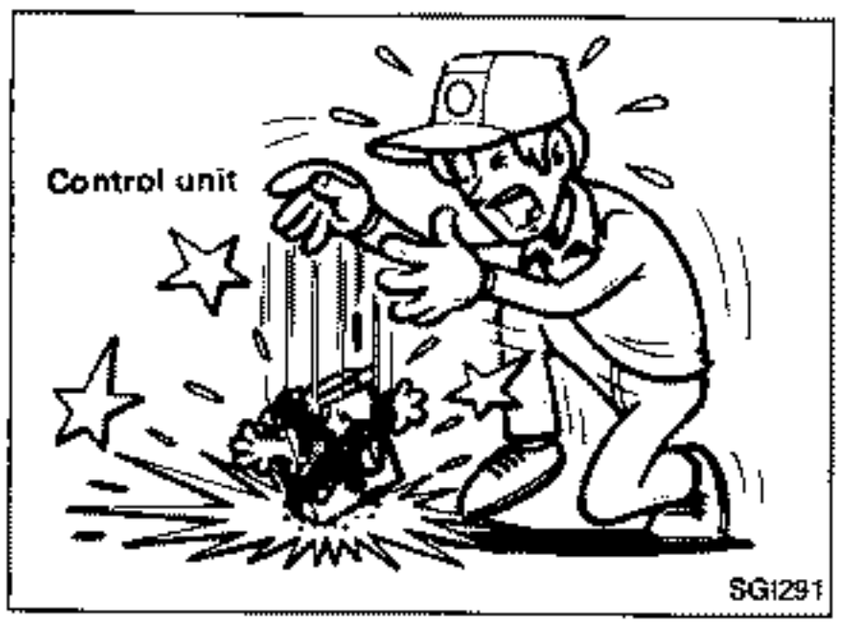

Precautions for E.F.I. or E.C.C.S. Engine

1. Before connecting or disconnecting E.F.I. or E.C.C.S. harness connector to or from any E.F.I. or E.C.C.S. control unit, be sure to turn the ignition switch to the "OFF" position and disconnect the negative battery terminal.
   Otherwise, there may be damage to control unit.
2. Before disconnecting pressurized fuel line from fuel pump to injectors, be sure to release fuel pressure to eliminate danger.
3. Be careful not to jar components such as control unit and air flow meter.

Z.ONE.DATSUN

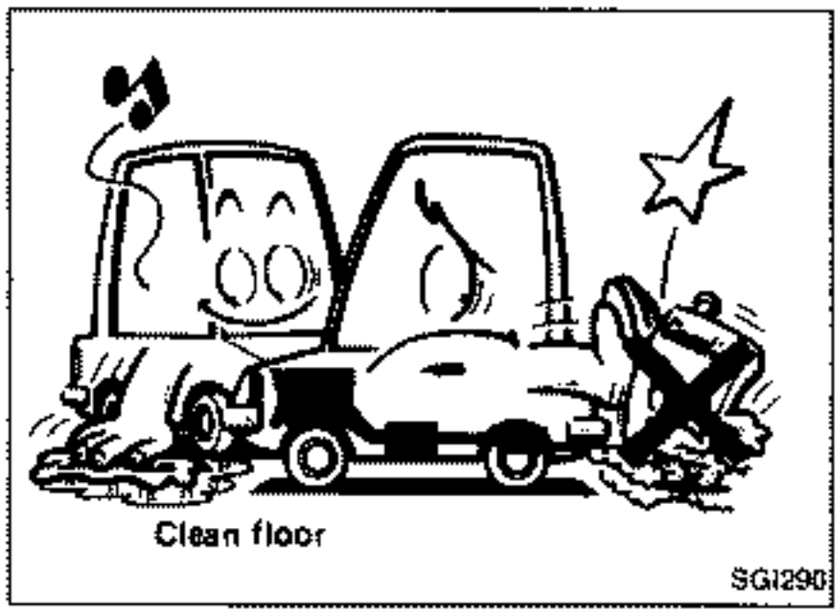

Precautions for Catalyst

If a large amount of unburned fuel flows into the converter, the converter temperature will be excessively high. To prevent this, follow the procedure below:

1. Use unleaded gasoline only. Leaded gasoline will seriously damage the catalytic converter.
2. When checking for ignition spark or measuring engine compression, make tests quickly and only when necessary.
3. Do not run engine when the fuel tank level is low, otherwise the engine may misfire causing damage to the converter.
4. Do not place the vehicle on inflammable material. Keep inflammable material off the exhaust pipe.

Precautions for Turbocharger

The turbocharger turbine revolves at extremely high speeds and becomes very hot. Therefore, it is essential to maintain a clean supply of oil flowing through the turbocharger and to follow all required maintenance instructions and operating procedures.

For proper operation of the system, follow the procedure below.

1. Always use the recommended oil. Follow the instructions for proper time to change the oil and proper oil level.
2. Avoid accelerating engine to a high rpm immediately after starting.
3. If engine had been operating at high rpm for an extended period of time, let it idle for a few minutes prior to shutting it off.

Asbestos Safety Instructions (Based on United Kingdom and Republic of Ireland regulations)

This vehicle uses parts containing asbestos. Most are not hazardous but Brake and Clutch linings can be. Consult the manufacturer or his agent for further details. When working with these please observe the "Garage Workers' Asbestos Code" available through your Nissan Dealer, Local Authority or Health and Safety Executive. In particular, work in a well-ventilated place using, where possible, appropriate dust extraction equipment, and avoid creating dust. Dampen all asbestos/dust where possible prior to machining, cutting, cleaning, etc. Use only hand or low speed tools.

Dispose of all asbestos waste, wet rags, etc., in a closed container as directed by your local waste disposal authority.

Z.ONE.DATSUN

Precautions for Fuel

For Australia

Unleaded gasoline of at least 91 octane (RON)

For optimum engine performance, Nissan recommends the use of premium unleaded petrol above 95 octane (RON). However if this petrol is not available, your Nissan vehicle will also operate with 91 to 93 octane (RON) fuel.

CAUTION:

Do not use leaded gasoline. Using leaded gasoline will damage the catalytic converter.

For Europe

Unleaded premium gasoline with an octane rating of at least 95 (RON) must be used.

If premium gasoline is not available, unleaded regular gasoline with an octane rating of 91 (RON) may be temporarily used, but only under the following precautions:

- Have the fuel tank filled only partially with unleaded regular gasoline, and fill up with premium unleaded gasoline as soon as possible.
- Avoid full throttle driving and abrupt acceleration.

CAUTION:

Do not use leaded gasoline. Using leaded gasoline will damage the catalytic converter.

Z.ONE.DATSUN

1. **A QUICK REFERENCE INDEX,** a black tab (e.g. BR) is provided on the first page. You can quickly find the first page of each section by mating it to the section's black tab.
2. **THE CONTENTS** are listed on the first page of each section.
3. **THE TITLE** is indicated on the upper portion of each page and shows the part or system.
4. **THE PAGE NUMBER** of each section consists of two letters, which designate the particular section, and a number (e.g. "BR-5").
5. **THE LARGE ILLUSTRATIONS** are exploded views (See below.) and contain tightening torques, lubrication points and other information necessary to perform repairs.
   The illustrations should be used in reference to service matters only. When ordering parts, refer to the appropriate **PARTS CATALOG**.

Example

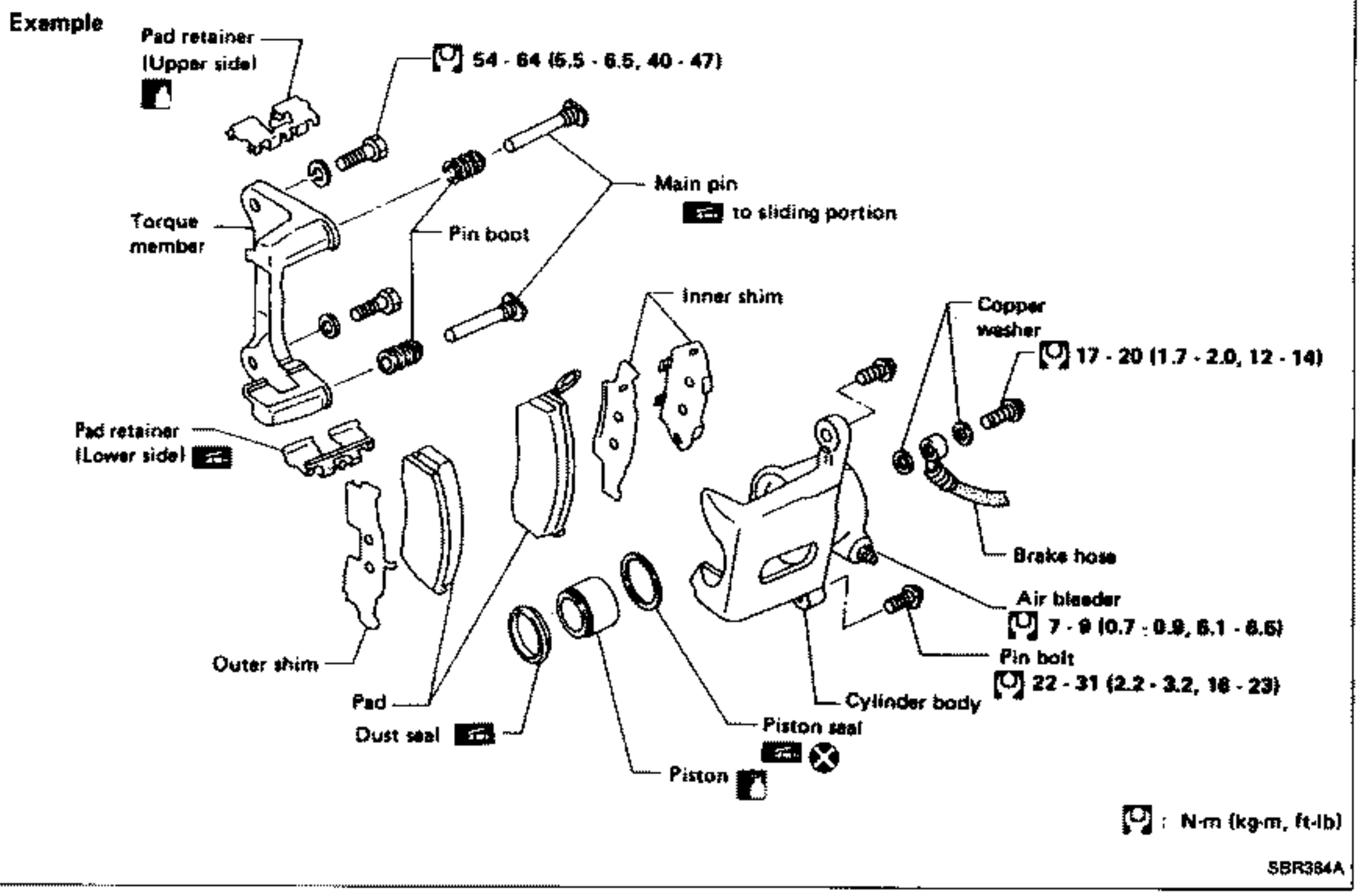

6. **THE SMALL ILLUSTRATIONS** show the important steps such as inspection, use of special tools, knacks of work and hidden or tricky steps which are not shown in the previous large illustrations. Assembly, inspection and adjustment procedures for the complicated units such as the automatic transaxle or transmission, etc. are presented in a step-by-step format where necessary.

Z.ONE.DATSUN

7. The following **SYMBOLS AND ABBREVIATIONS** are used:


: Tightening torque


: Should be lubricated with grease. Unless otherwise indicated, use recommended multi-purpose grease.


: Should be lubricated with oil.


: Sealing point


: Checking point


: Always replace after every disassembly.

L.H., R.H. : Left-Hand, Right-Hand
FR, RR : Front, Rear
2WD : 2-Wheel Drive


: Apply petroleum jelly.


: Apply A.T.F.

★ : Select with proper thickness.
☆ : Adjustment is required.
M/T : Manual Transaxle/Transmission
A/T : Automatic Transaxle/Transmission
A/C : Air Conditioner
P/S : Power Steering
S.S.T. : Special Service Tools
S.D.S. : Service Data and Specifications
SAE : Society of Automotive Engineers, Inc.
G.C.C. : Gulf Cooperation Council
L.H.D. : Left-Hand Drive
R.H.D. : Right-Hand Drive
A.T.F. : Automatic Transmission Fluid
D_1 : Drive range 1st gear
D_2 : Drive range 2nd gear
D_3 : Drive range 3rd gear
D_4 : Drive range 4th gear
O.D. : Overdrive
2_2 : 2nd range 2nd gear
2_1 : 2nd range 1st gear
1_2 : 1st range 2nd gear
1_1 : 1st range 1st gear

8. The **UNITS** given in this manual are primarily expressed as the SI UNIT (International System of Unit), and alternatively expressed in the metric system and in the yard/pound system.
   "Example"
   Tightening torque:
   59 - 78 N·m (6.0 - 8.0 kg-m, 43 - 58 ft-lb)
9. **TROUBLE DIAGNOSES** are included in sections dealing with complicated components.
10. **SERVICE DATA AND SPECIFICATIONS** are contained at the end of each section for quick reference of data.
11. The captions **WARNING** and **CAUTION** warn you of steps that must be followed to prevent personal injury and/or damage to some part of the vehicle.

- **WARNING** indicates the possibility of personal injury if instructions are not followed.
- **CAUTION** indicates the possibility of component damage if instructions are not followed.
- **BOLD TYPED STATEMENTS** except **WARNING** and **CAUTION** give you helpful information.

Z.ONE.DATSUN

WIRING DIAGRAM

Symbols used in WIRING DIAGRAM are shown below:

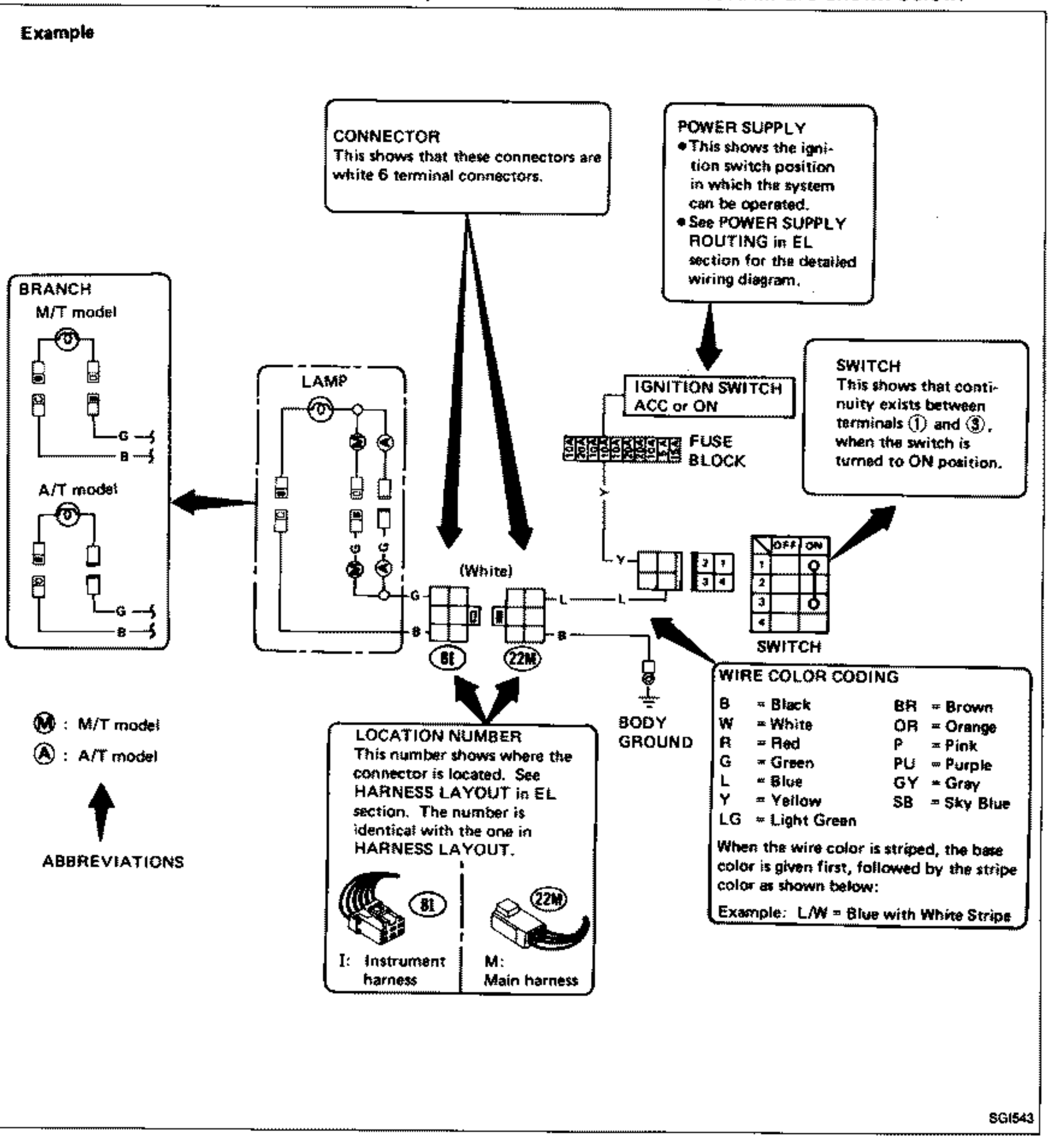

Z.ONE.DATSUN

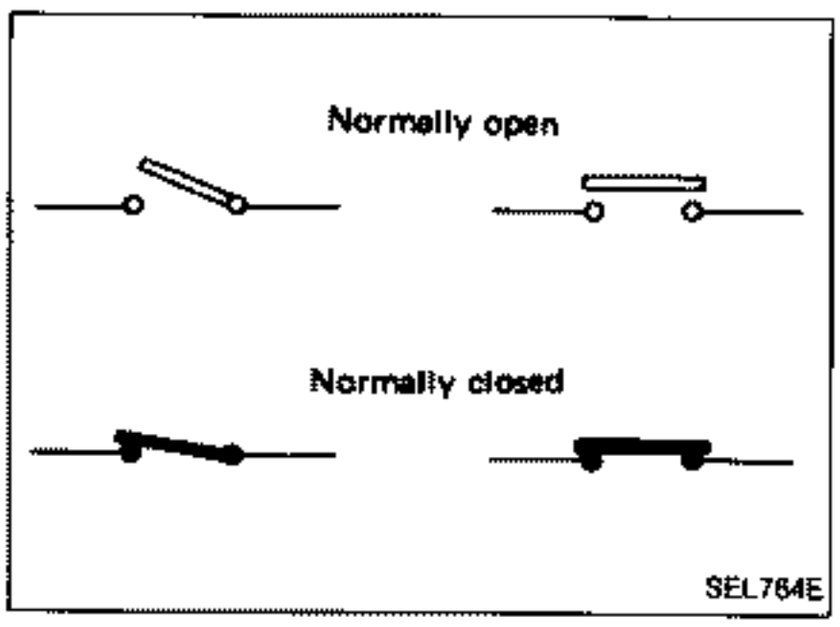

SWITCH POSITIONS

Wiring diagram switches are shown with the vehicle in the following condition.

- Ignition switch "OFF".
- Doors, hood and trunk lid/back door closed.
- Pedals are not depressed and parking brake is released.

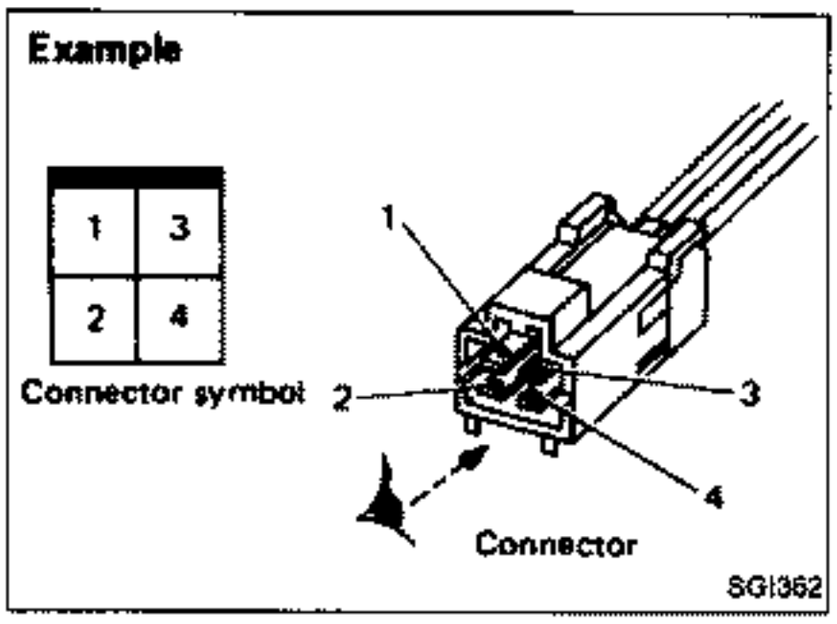

CONNECTOR SYMBOLS

- All connector symbols in wiring diagrams are shown from the terminal side.

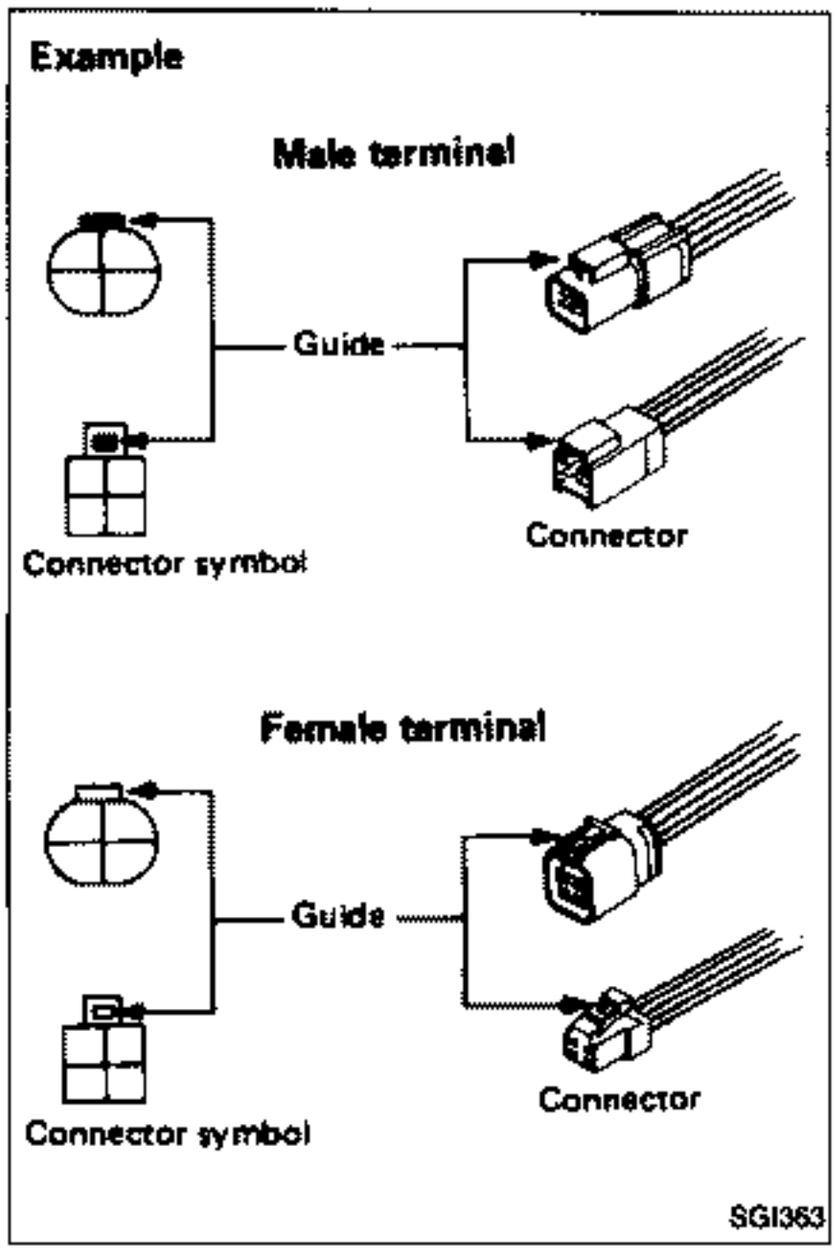

- Male and female terminals
  Connector guides for male terminals are shown in black and female terminals in white in wiring diagrams.

Z.ONE.DATSUN

MULTIPLE SWITCH

The continuity of the multiple switch is identified in the switch chart in wiring diagrams.

Example

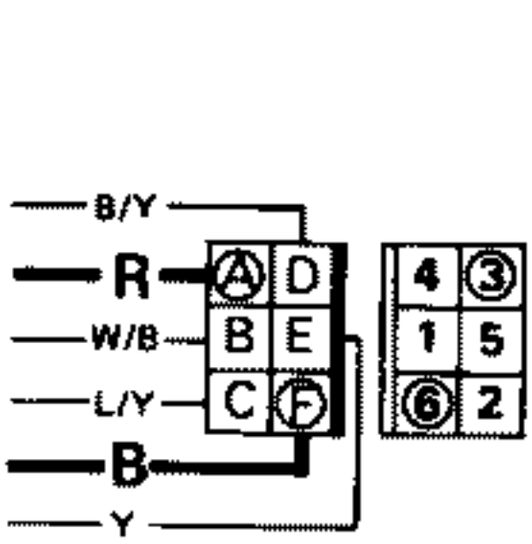

WIPER SWITCH

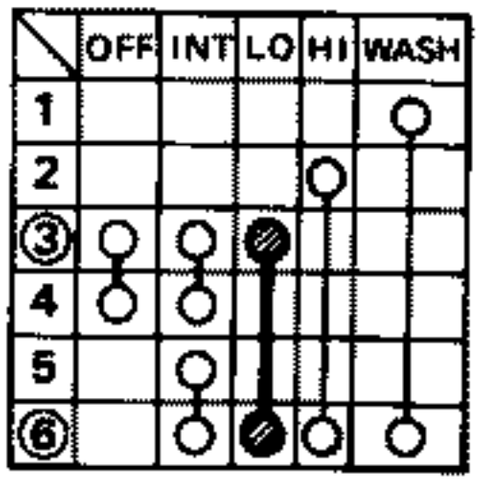

Continuity circuit of wiper switch

SWITCH POSITION	CONTINUITY CIRCUIT
OFF	3 - 4
INT	3 - 4, 5 - 6
LO	3 - 6
HI	2 - 6
WASH	1 - 6

Example: Wiper switch in LO position

Continuity circuit: Red wire — Ⓐ terminal — ③ terminal — Wiper switch (● — ●: LO) — ⑥ terminal — Ⓕ terminal — Black wire

SGI365

Z.ONE.DATSUN

SUPER MULTIPLE JUNCTION (S.M.J.)

- The "S.M.J." indicated in wiring diagrams is shown in a simplified form. The terminal arrangement should therefore be referred to in the foldout at the end of the Service Manual.
- The foldout should be spread to read the entire wiring diagram.

Example

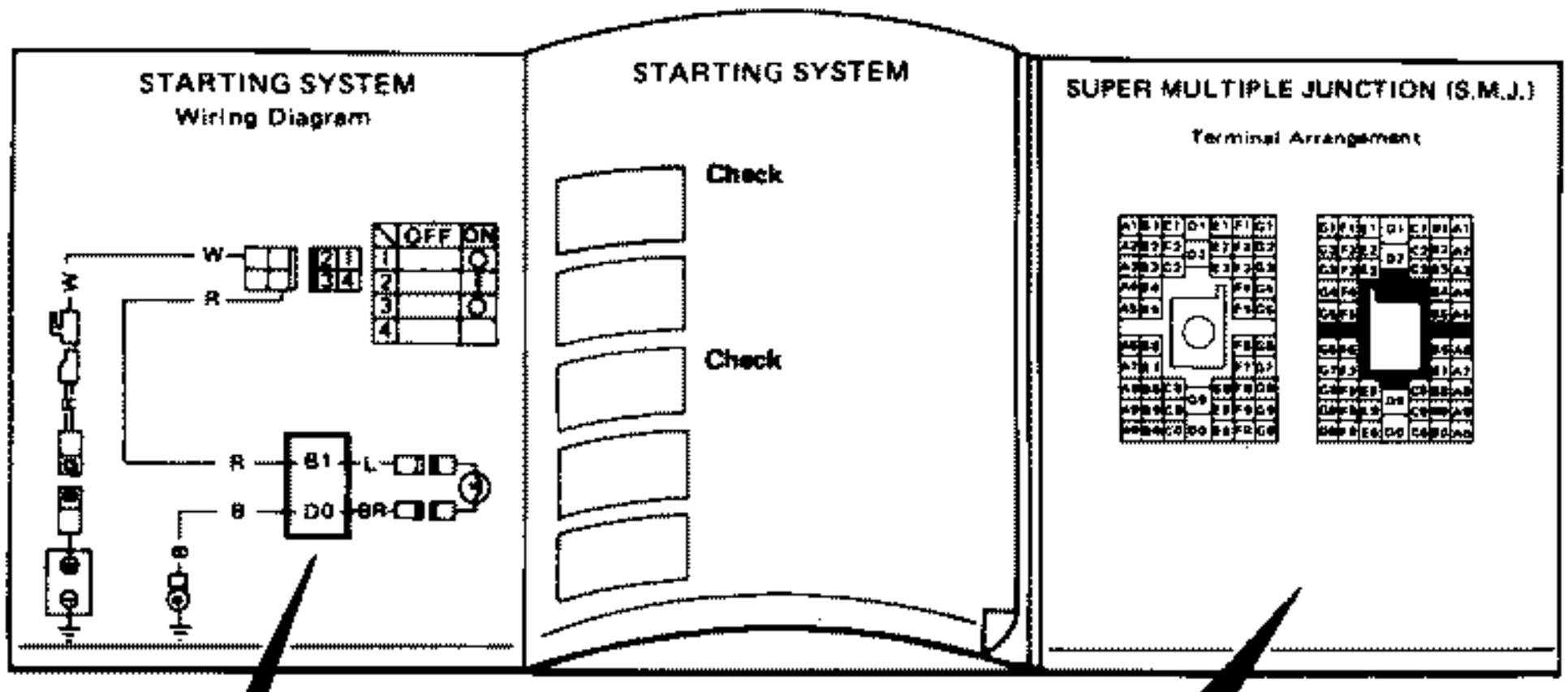

SEL653F

Z.ONE.DATSUN

Example

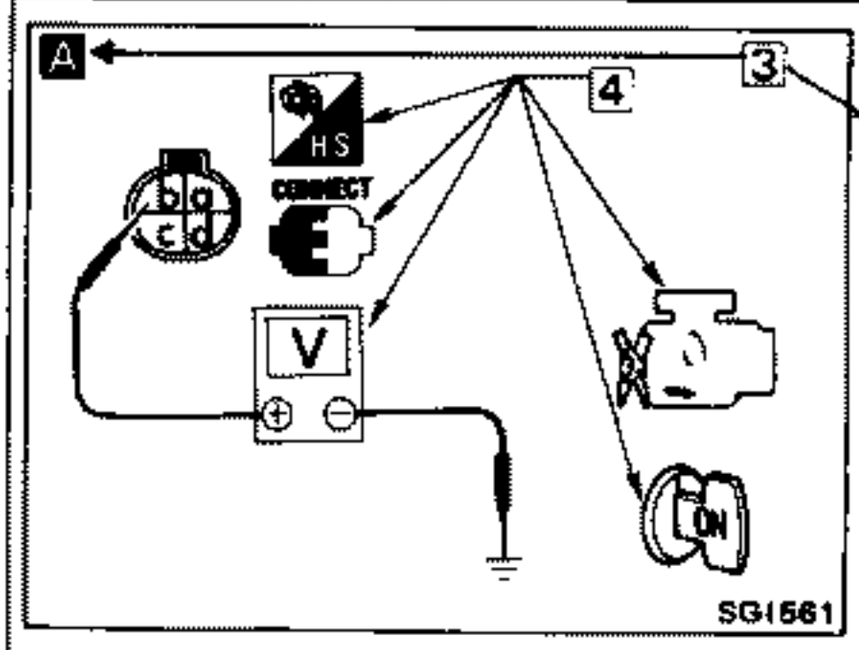

INSPECTION START

A

CHECK POWER SUPPLY.
1) Turn ignition switch "ON".
2) Check voltage between terminal ⓑ and ground.
→**Battery voltage should exist.**

N.G. → 1

Check the following items.
1) Harness continuity between crank angle sensor and battery
2) E.C.C.S. relay-1 (See page EF & EC-106.)
3) "BR" fusible link
4) Power source for E.C.U. (See page EF & EC-104.)
5) Ignition switch

O.K.

2

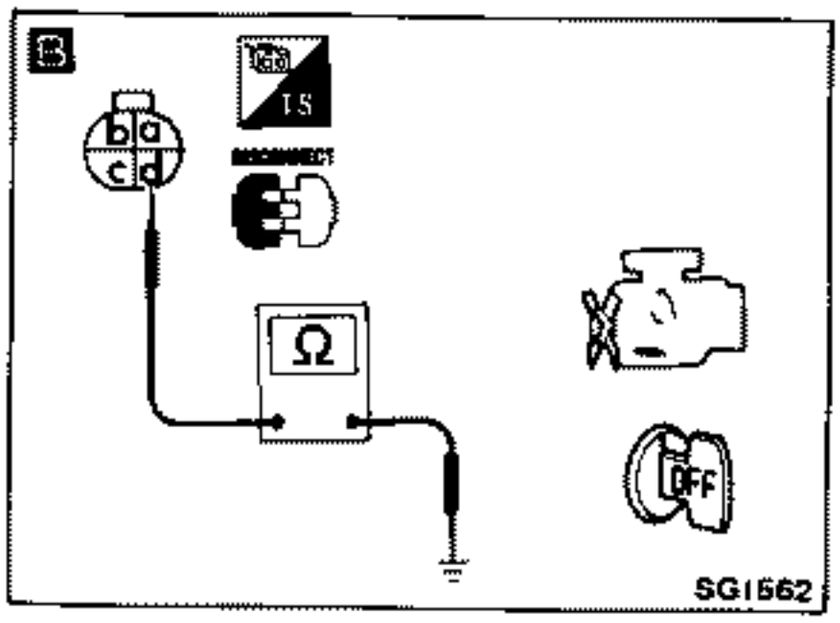

B

CHECK GROUND CIRCUIT.
1) Turn ignition switch "OFF".
2) Disconnect crank angle sensor harness connector.
3) Check resistance between terminal ⓓ and ground.
Resistance:
Approximately 0Ω

N.G. →

Check the following items.
1) Harness continuity between crank angle sensor and ground
2) Ground circuit for E.C.U. (See page EF &EC-104.)

O.K.

NOTICE

The flow chart indicates work procedures required to diagnose problems effectively. Observe the following instructions before diagnosing.

1) **Use the flow chart after locating probable causes of a problem following the "Preliminary Check" or the "Symptom Chart".**
2) **After repairs, re-check that the problem has been completely eliminated.**
3) **Refer to Component Parts Location and Harness Layout for the Systems described in each section for identification/location of components and harness connectors.**
4) **Refer to the Circuit Diagram for Quick Pinpoint Check. If you must perform circuit continuity between harness connectors more detail, such as in case of sub-harness is used, refer to Wiring Diagram and Harness Layout in EL section for identification of harness connectors.**
5) **When checking circuit continuity, ignition switch should be "OFF".**
6) **Before checking voltage at connectors, check battery voltage.**
7) **After accomplishing the Diagnostic Procedures and Electrical Components Inspection, make sure that all harness connectors are reconnected as it was.**

Z.ONE.DATSUN

HOW TO FOLLOW THIS FLOW CHART

1 Work and diagnostic procedure

Start to diagnose a problem using procedures indicated in enclosed blocks, as shown in the following example.

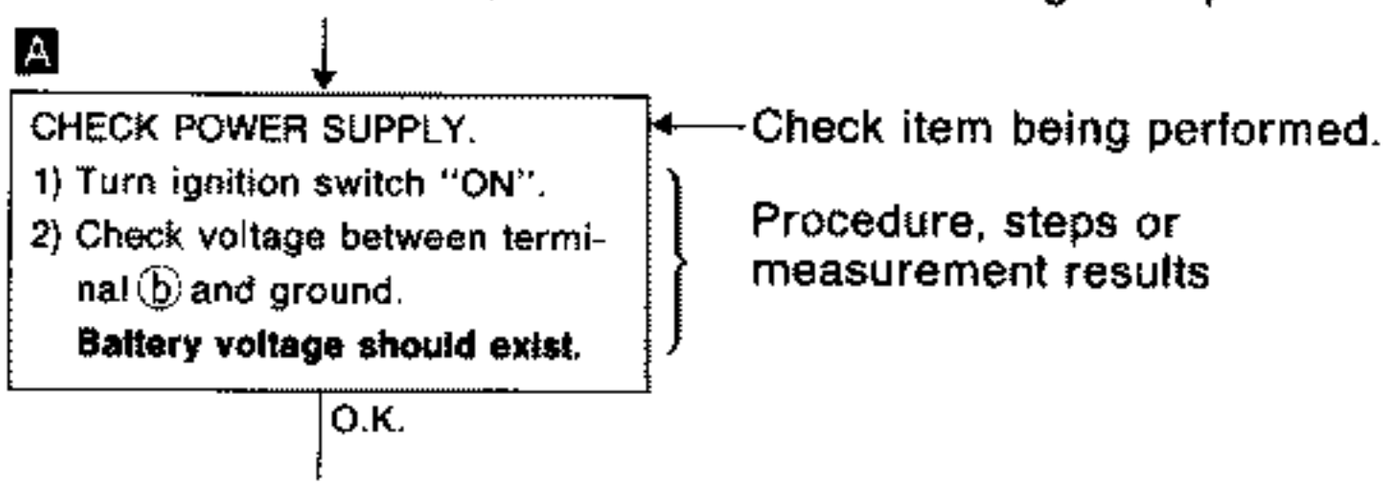

2 Measurement results

Required results are indicated in bold type in the corresponding block, as shown below:
These have the following meanings:

Battery voltage → 11 - 14V or approximately 12V
Voltage: Approximately 0V → Less than 1V

3 Cross reference of work symbols in the text and illustrations

Illustrations are provided as visual aids for work procedures. For example, symbol A indicated in the left upper portion of each illustration corresponds with the symbol in the flowchart for easy identification. More precisely, the procedure under the "CHECK POWER SUPPLY" outlined previously is indicated by an illustration A.

4 Symbols used in illustrations

Symbols included in illustrations refer to measurements or procedures. Before diagnosing a problem, familiarize yourself with each symbol.

Z.ONE.DATSUN

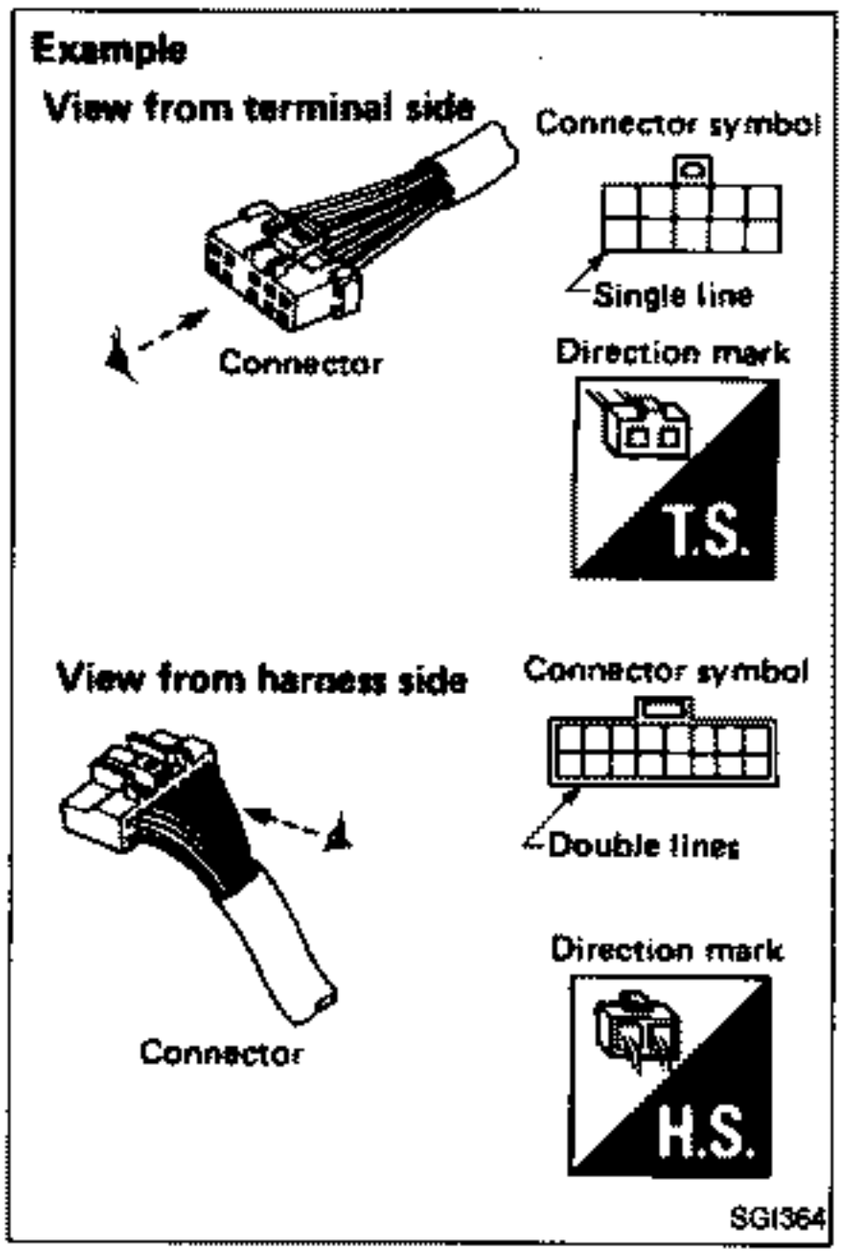

Direction mark

A direction mark is shown to clarify the side of connector (terminal side or harness side).
Direction marks are mainly used in the illustrations indicating terminal inspection.

T.S. : **View from terminal side ... T.S.**

- **All connector symbols shown from the terminal side are enclosed by a single line.**

H.S. : **View from harness side ... H.S.**

- **All connector symbols shown from the harness side are enclosed by a double line.**

Z.ONE.DATSUN

Key to symbols signifying measurements or procedures

Symbol	Symbol explanation
	Check after disconnecting the connector to be measured.
	Check after connecting the connector to be measured.
	Insert key into ignition switch.
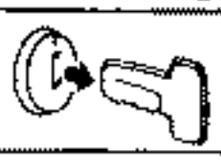	Remove key from ignition switch.
	Turn ignition switch to "OFF" position.
	Turn ignition switch to "ON" position.
	Turn ignition switch to "START" position.
	Turn ignition switch from "OFF" to "ACC" position.
	Turn ignition switch from "ACC" to "OFF" position.
	Turn ignition switch from "OFF" to "ON" position.
	Turn ignition switch from "ON" to "OFF" position.
	Do not start engine, or check with engine stopped.
	Start engine, or check with engine running.
	Apply parking brake.
	Release parking brake.
	Check after engine is warmed up sufficiently.
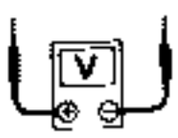	Voltage should be measured with a voltmeter.
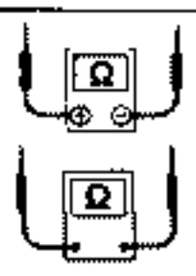	Circuit resistance should be measured with an ohmmeter.

Symbol	Symbol explanation
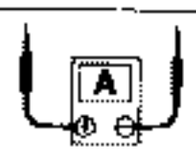	Current should be measured with an ammeter.
	Procedure with CONSULT
	Procedure without CONSULT
	A/C switch is "OFF".
	A/C switch is "ON".
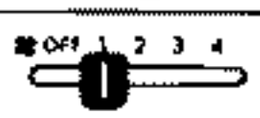	Fan switch is "ON". (At any position except for "OFF" position)
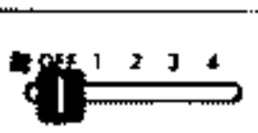	Fan switch is "OFF".
	Apply battery voltage directly to components.
	Drive vehicle.
	Disconnect battery negative cable.
	Depress brake pedal.
	Release brake pedal.
	Depress accelerator pedal.
	Release accelerator pedal.
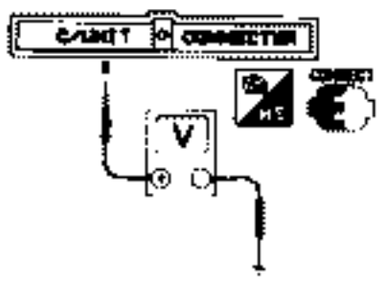	Pin terminal check for S.M.J. type E.C.U. and A/T control unit connectors. **For details regarding the terminal arrangement, refer to the foldout page.**

Z.ONE.DATSUN

Outside View

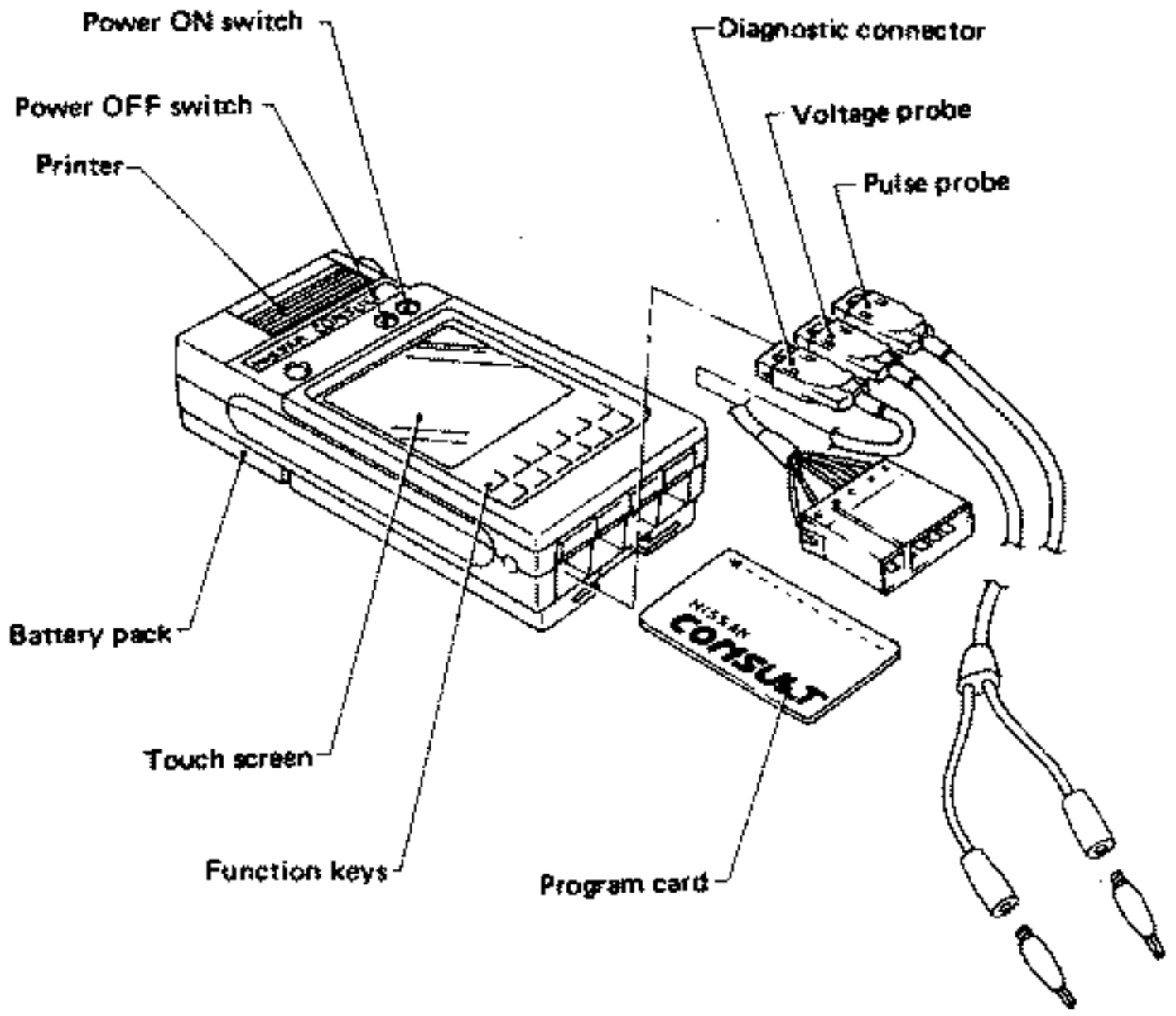

SGI619

System Application

Diagnostic mode \ System	E.C.C.S.	Auto A/C*	A/T	HICAS*
Work support	X	X	—	—
Self-diagnostic results	X	X	X	X
Data monitor	X	X	X	X
Active test	X	X	—	X
E.C.U. part number	X	—	X	X

X: Applicable
*: For Europe

Z.ONE.DATSUN

Function

Diagnostic mode	Function
Work support	This mode enables a technician to adjust some devices faster and more accurately by following the indications on CONSULT.
Self-diagnostic results	Self-diagnostic results can be read and erased quickly.
Data monitor	Input/Output data in the control unit can be read.
Active test	Mode in which CONSULT drives some actuators apart from the control units and also shifts some parameters in a specified range.
E.C.U. part number	E.C.U. part number can be read.

Checking Equipment

Tool name	Description
NISSAN CONSULT kit ① CONSULT unit and accessories ② Program card ③ Operation manuals ④ Binder ⑤ Carrying case ⑥ Thermal paper (Rolls)	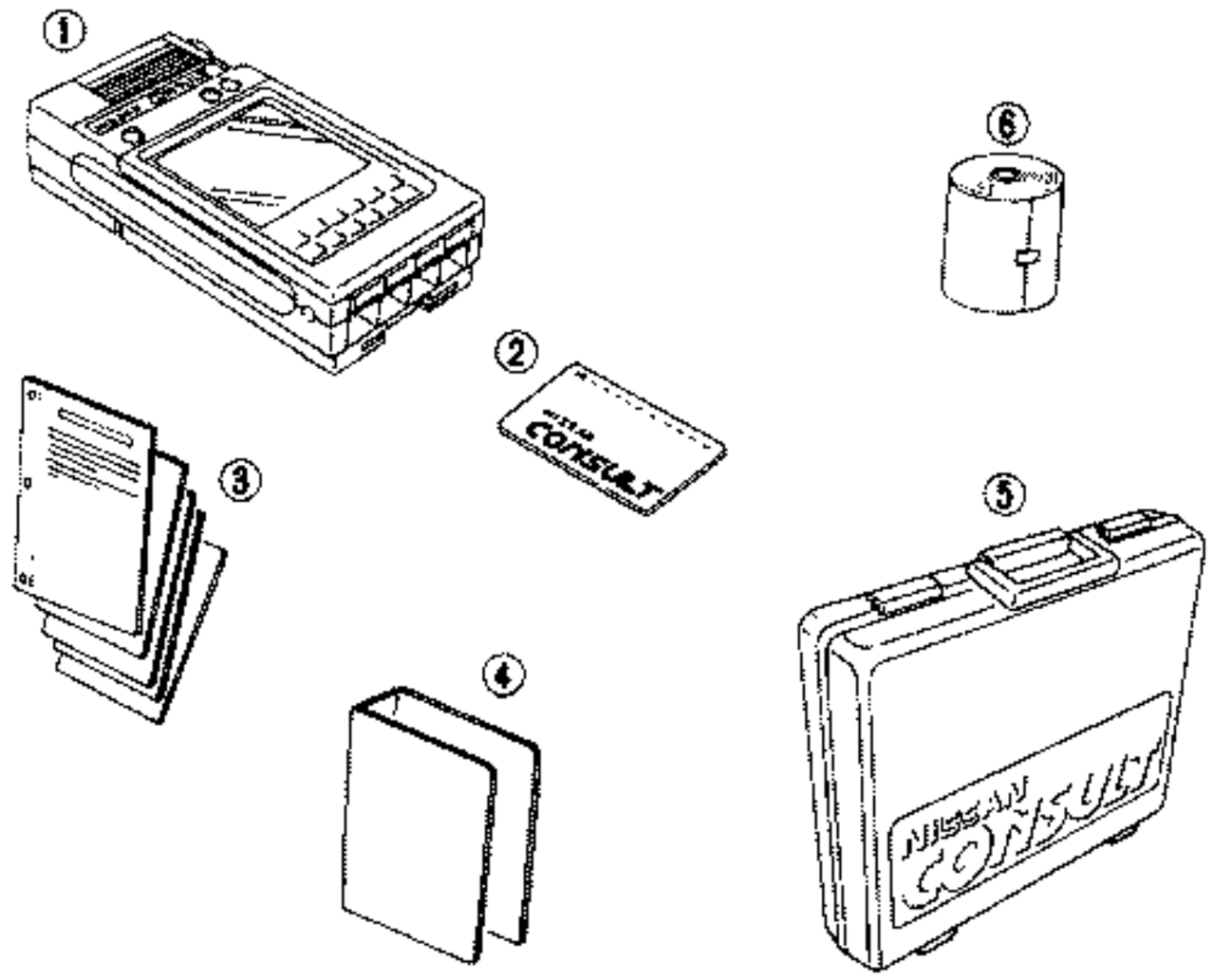

When ordering the above equipment, contact your NISSAN distributor.

Z.ONE.DATSUN

Model Variation

Body	Destination	Model		Engine	Transmission	Differential carrier
T-bar roof	Europe	2+2	KRG-JSQ	VG30DETT	RS5R30A	R230V
			KRG-JASQ		RE4R03A	
			KRLG-JSQ		RS5R30A	
			KRLG-JASQ		RE4R03A	
T-bar roof	Australia	2+2	KRG-JM	VG30DE	RS5R30A	R200V
			KRG-JAM		RE4R01A	

Prefix and suffix designations:

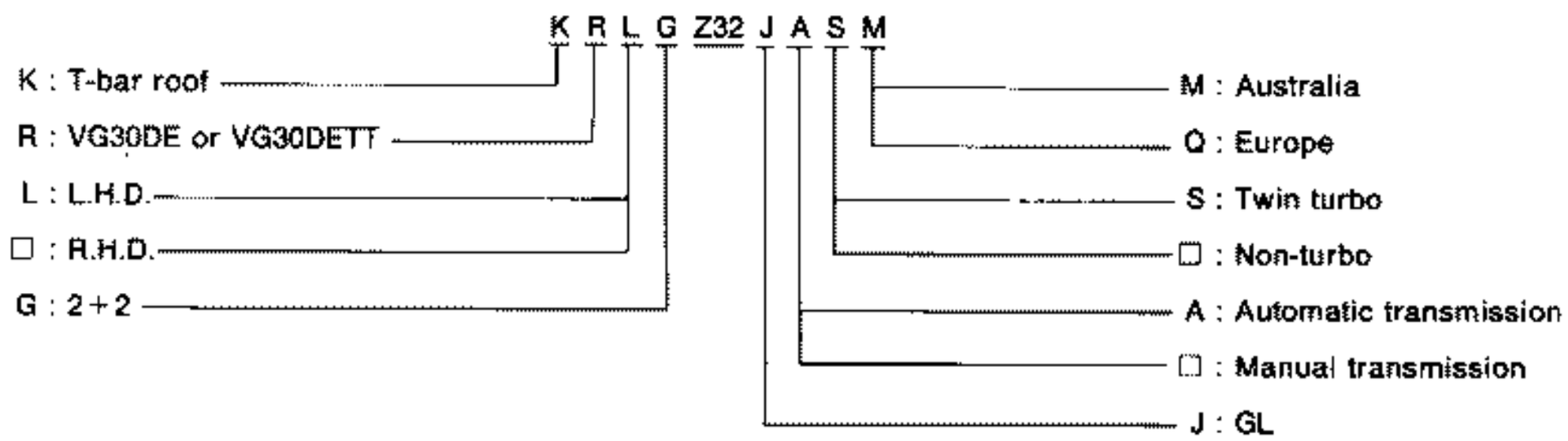

□ : means no indication

Z.ONE.DATSUN

Identification Number

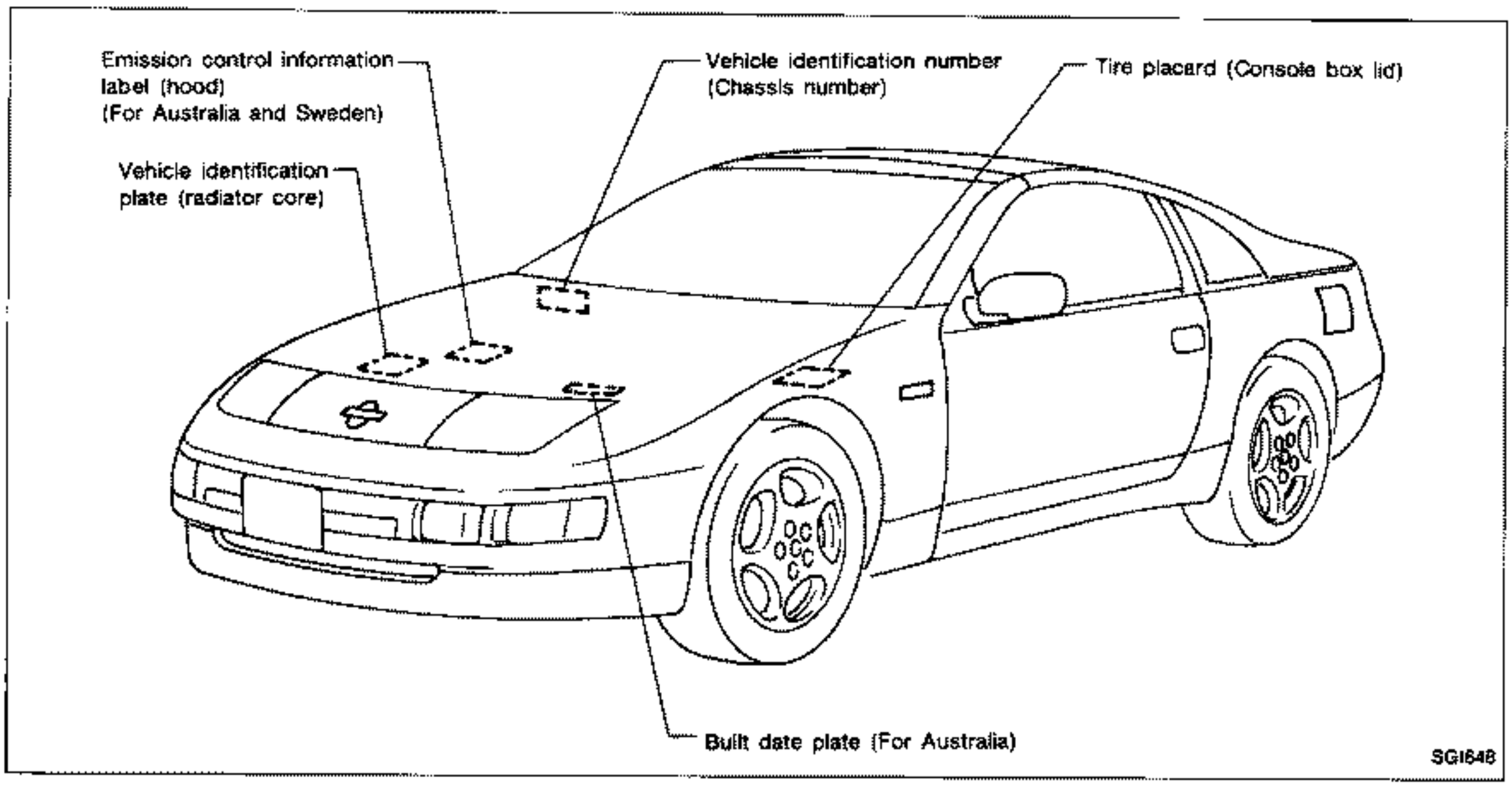

VEHICLE IDENTIFICATION NUMBER ARRANGEMENT

JN1 0 R G Z32 A 0 XXXXXX

Manufacturer
JN1: Nissan, Passenger vehicle

Stopgap
(no meaning)

Engine type
R : VG30DE or VG30DETT

Body type
G : 2+2 seater

Vehicle serial number

Stopgap (no meaning)

Destination
A : For Australia
U : For Europe

Model

Z.ONE.DATSUN

Identification Number (Cont'd)

IDENTIFICATION PLATE

Europe

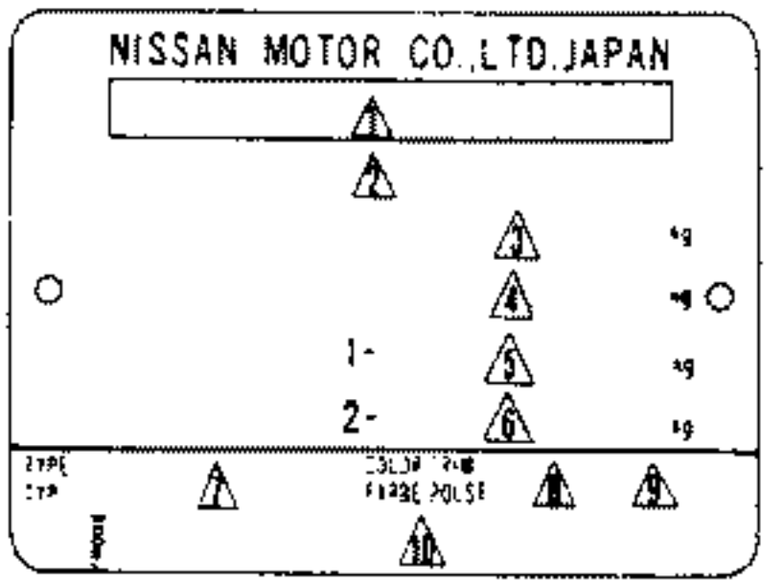

SGI025

Except Europe

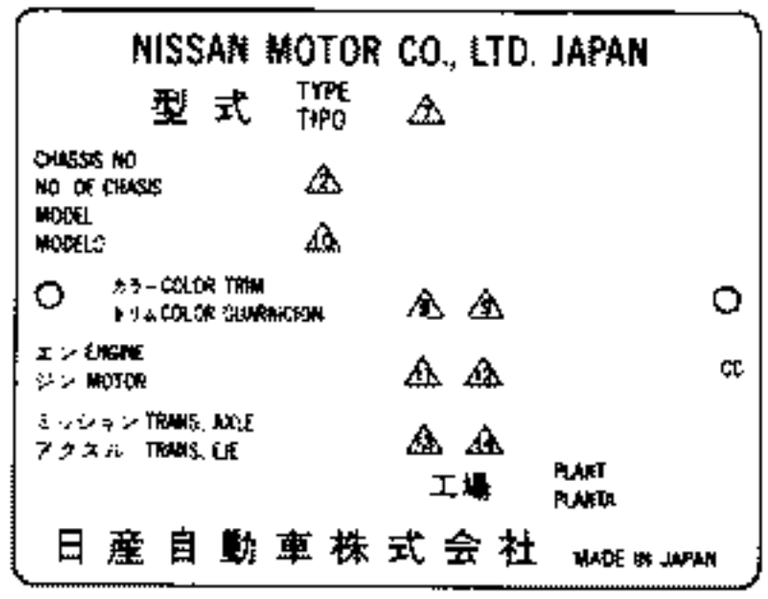

SGI316

1 Type approval number
2 Vehicle identification number (Chassis number)
3 Gross vehicle weight
4 Gross combination weight
Gross vehicle weight
+ Gross trailing capacity (Weight)
5 Gross axle weight (Front)
6 Gross axle weight (Rear)
7 Type
8 Body color code
9 Trim color code
10 Model
11 Engine model
12 Engine displacement
13 Transmission model
14 Axle model

ENGINE SERIAL NUMBER

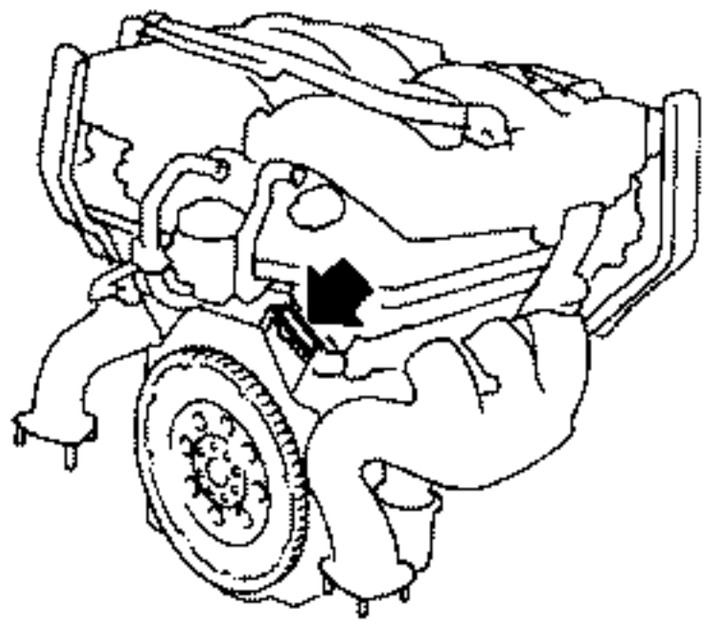

SGI612

MANUAL TRANSMISSION NUMBER

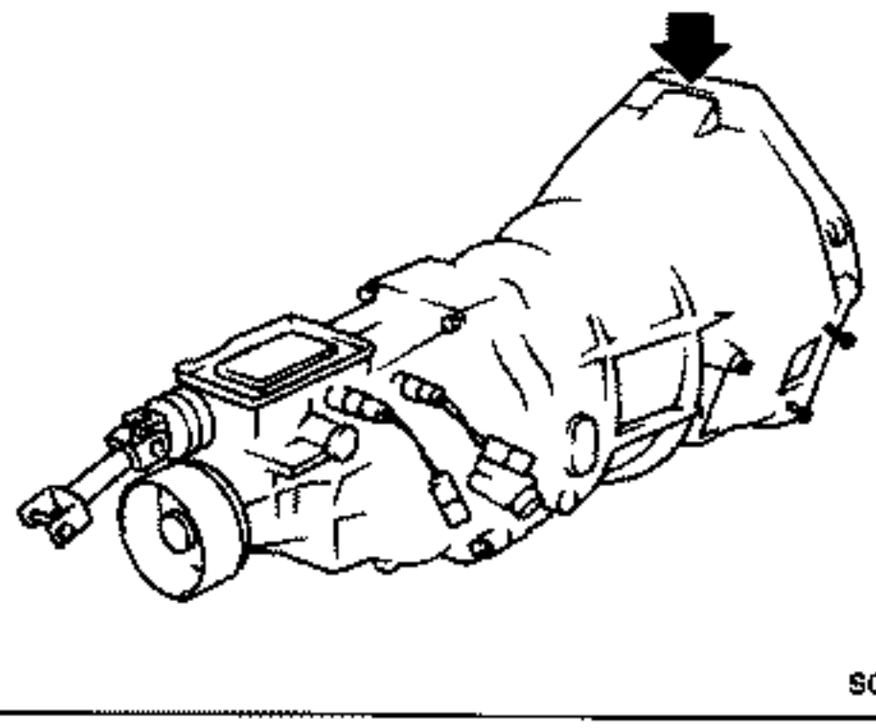

SGI611

AUTOMATIC TRANSMISSION NUMBER

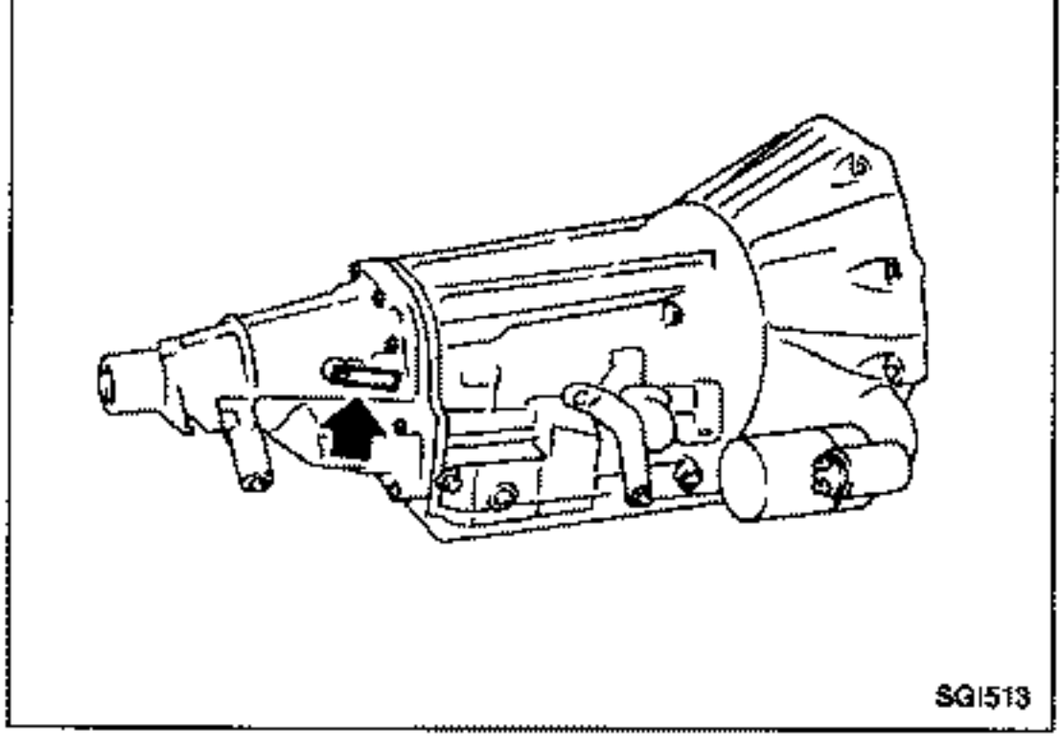

SGI513

Z.ONE.DATSUN

Dimensions

Unit: mm (in)

	2+2
Overall length	4,525 (178.1)
Overall width	1,800 (70.9)
Overall height (T-bar roof)	1,255 (49.4)
Front tread	1,495 (58.9)
Rear tread	1,535 (60.4)*1 1,555 (61.2)*2
Wheelbase	2,570 (101.2)

*1: For Australia
*2: For Europe

Wheels and Tires

Road wheel

	Aluminum	Steel	Offset mm (in)
Conventional	16 x 7.5JJ*1	—	45 (1.77)
	16 x 8.5JJ*2	—	35 (1.38)*1
Spare T-type	—	16 x 4T	30 (1.18)

Tire size

Conventional	P225/50R16 91V*3 225/50ZR16*4 245/45ZR16*5
Spare T-type	T125/90D16

*1: For Australia and front wheel for Europe
*2: Rear wheel for Europe
*3: For Australia
*4: Front tire for Europe
*5: Rear tire for Europe

Z.ONE.DATSUN

Garage Jack and Safety Stand

WARNING:

- **Never get under the vehicle while it is supported only by the jack. Always use safety stands to support the frame when you have to get under the vehicle.**
- **Place wheel chocks at both the front and rear of the wheels on the ground.**

CAUTION:

Place a wooden or rubber block between safety stand and vehicle body when the supporting body is flat.

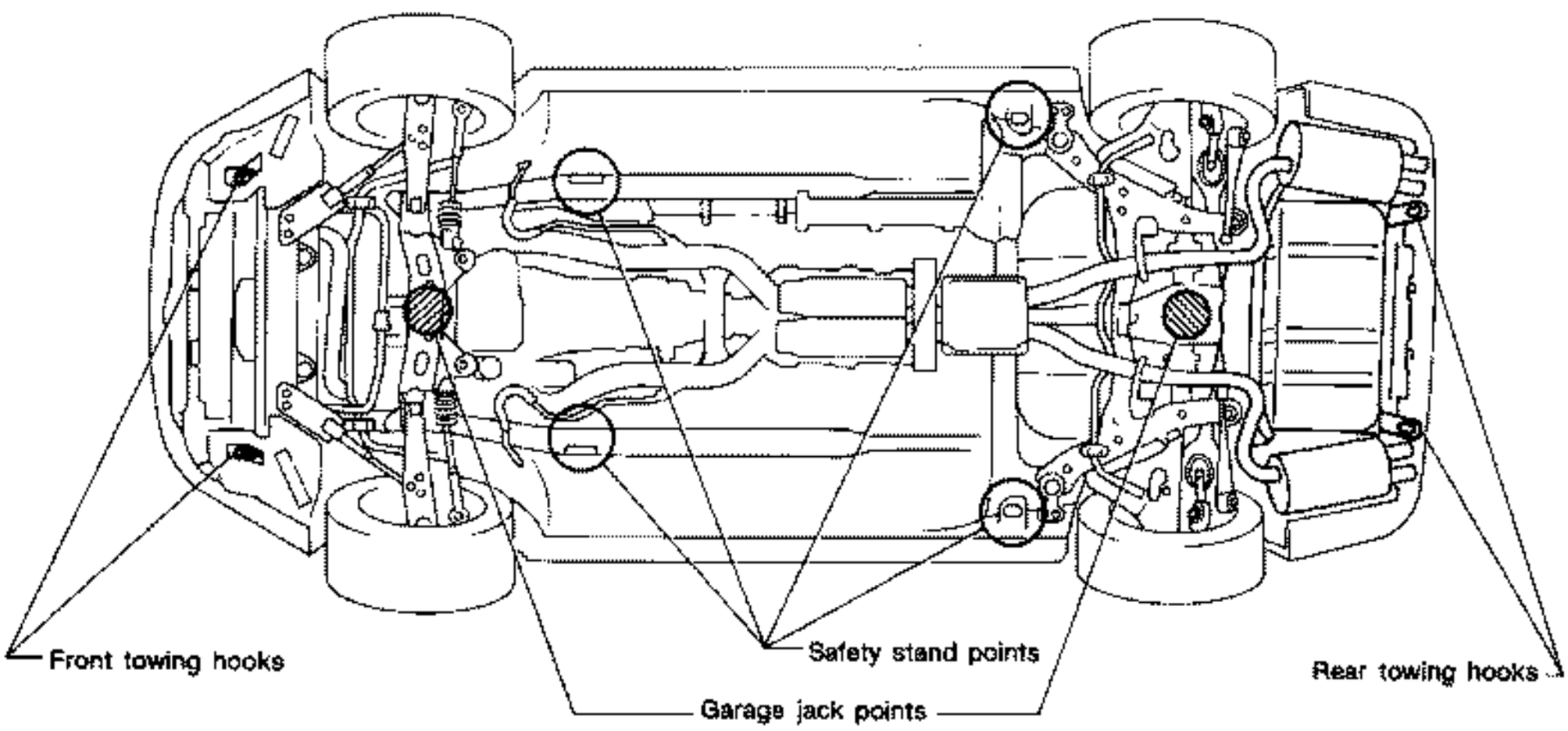

SGI649

Z.ONE.DATSUN

2-pole Lift

WARNING:
When lifting the vehicle, open the lift arms as wide as possible and ensure that the front and rear of the vehicle are well balanced.
When setting the lift arm, do not allow the arm to contact the brake tubes and fuel lines.

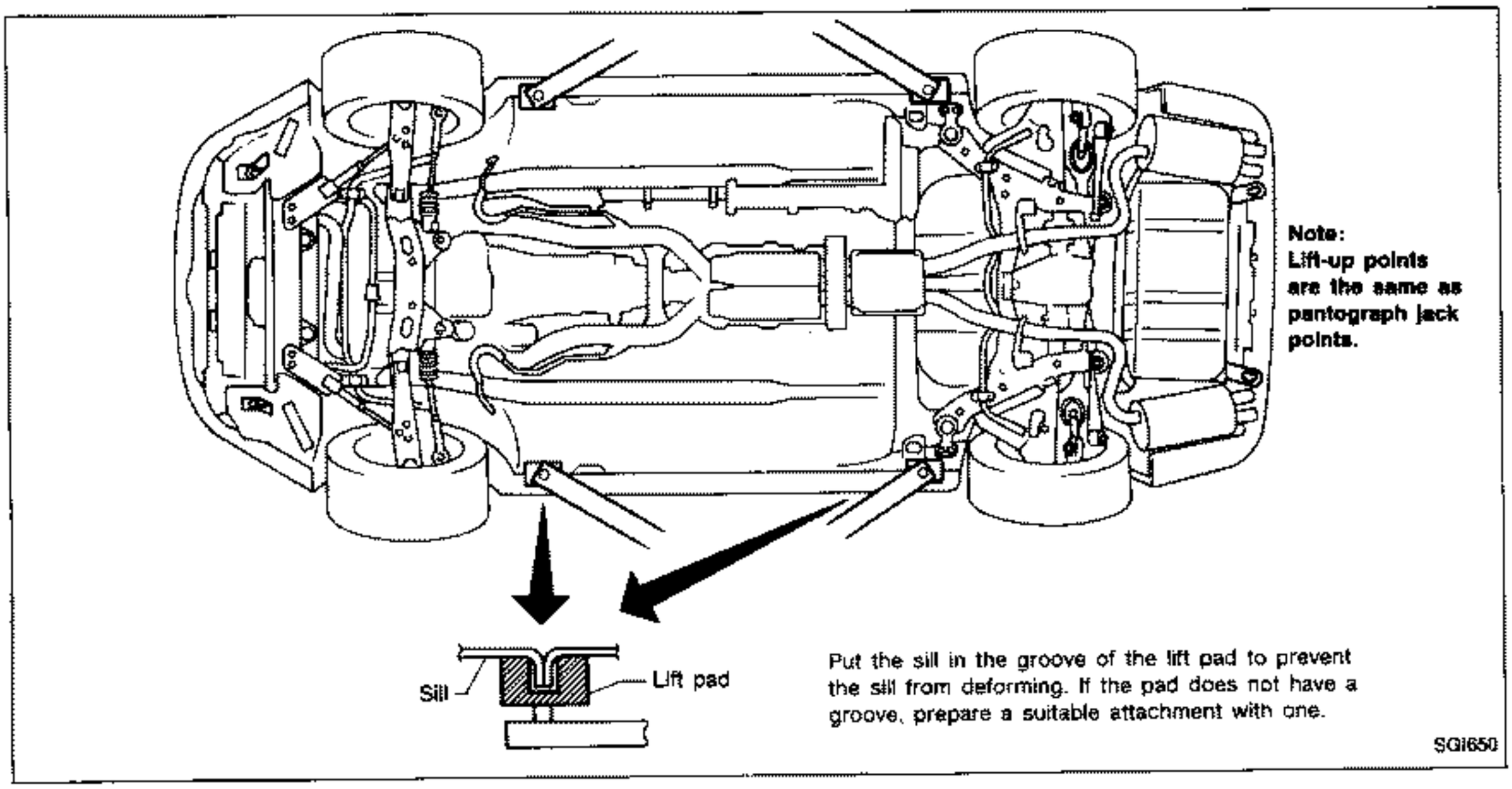

Note:
Lift-up points are the same as pantograph jack points.

Put the sill in the groove of the lift pad to prevent the sill from deforming. If the pad does not have a groove, prepare a suitable attachment with one.

SGI650

Tow Truck Towing

CAUTION:
- **All applicable local laws regarding the towing operation must be obeyed.**
- **It is necessary to use proper towing equipment to avoid possible damage to the vehicle during towing operation. Towing is in accordance with Towing Procedure Manual at dealer.**
- **When towing with the rear wheels on the ground, release the parking brake and move the gearshift lever to neutral ("N" position).**

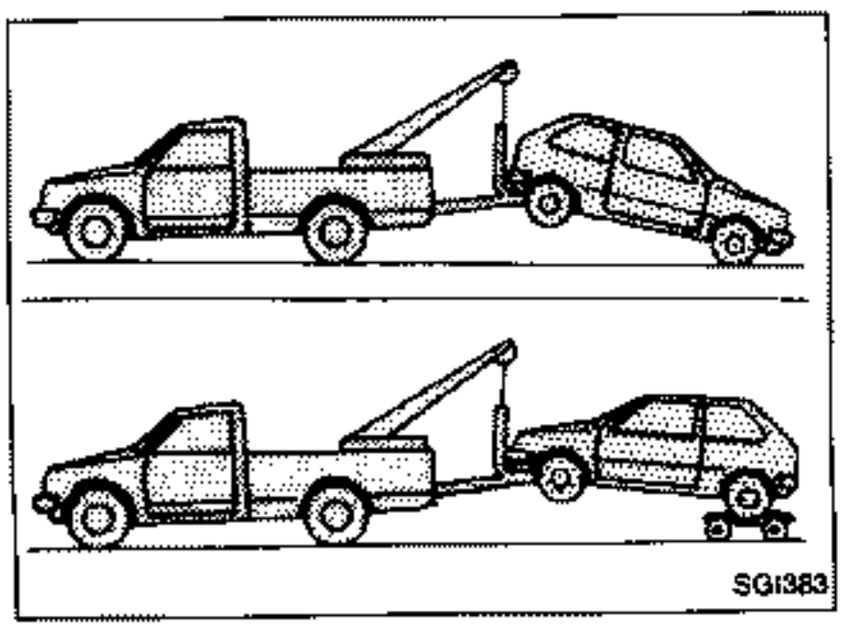

NISSAN recommends that vehicle be towed with the driving (rear) wheels off the ground as illustrated.

Z.ONE.DATSUN

Tow Truck Towing (Cont'd)

TOWING AN AUTOMATIC TRANSMISSION MODEL WITH FOUR WHEELS ON GROUND OR TOWING WITH FRONT WHEELS RAISED (With rear wheels on ground)

Observe the following restricted towing speeds and distances.

Speed:

Below 50 km/h (30 MPH)

Distance:

Less than 65 km (40 miles)

If the speed or distance must necessarily be greater, remove the propeller shaft beforehand to prevent damage to the transmission.

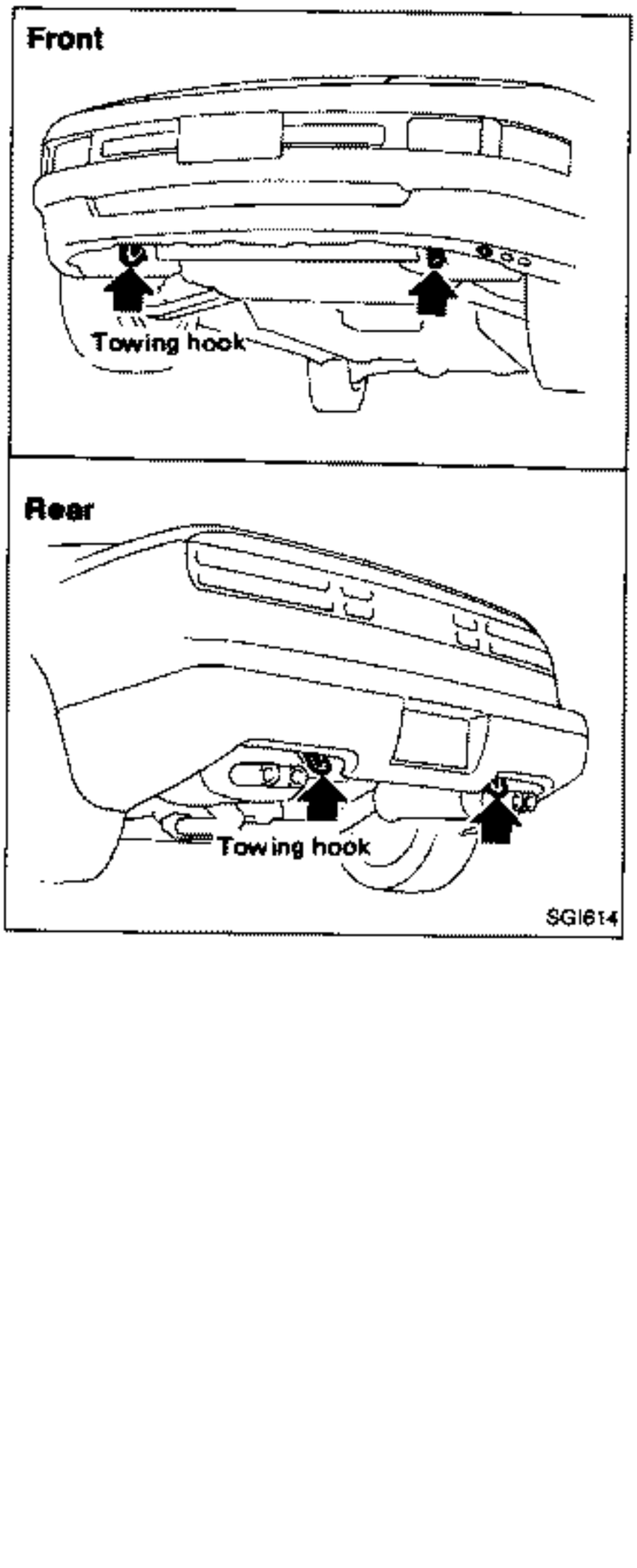

TOWING POINT

- **Always pull the cable straight out from the vehicle. Never pull on the hook at a sideways angle.**
- **Remove the first bolt under the front fender protector when using the front towing hooks.**

Z.ONE.DATSUN

TIGHTENING TORQUE OF STANDARD BOLTS

Grade	Bolt size	Bolt diameter* mm	Pitch mm	Tightening torque (Without lubricant)					
				Hexagon head bolt			Hexagon flange bolt		
				N·m	kg-m	ft-lb	N·m	kg-m	ft-lb
4T	M6	6.0	1.0	5.1	0.52	3.8	6.1	0.62	4.5
	M8	8.0	1.25	13	1.3	9	15	1.5	11
			1.0	13	1.3	9	16	1.6	12
	M10	10.0	1.5	25	2.5	18	29	3.0	22
			1.25	25	2.6	19	30	3.1	22
	M12	12.0	1.75	42	4.3	31	51	5.2	38
			1.25	46	4.7	34	56	5.7	41
	M14	14.0	1.5	74	7.5	54	88	9.0	65
7T	M6	6.0	1.0	8.4	0.86	6.2	10	1.0	7
	M8	8.0	1.25	21	2.1	15	25	2.5	18
			1.0	22	2.2	16	26	2.7	20
	M10	10.0	1.5	41	4.2	30	48	4.9	35
			1.25	43	4.4	32	51	5.2	38
	M12	12.0	1.75	71	7.2	52	84	8.6	62
			1.25	77	7.9	57	92	9.4	68
	M14	14.0	1.5	127	13.0	94	147	15.0	108
9T	M6	6.0	1.0	12	1.2	9	15	1.5	11
	M8	8.0	1.25	29	3.0	22	35	3.6	26
			1.0	31	3.2	23	37	3.8	27
	M10	10.0	1.5	59	6.0	43	70	7.1	51
			1.25	62	6.3	46	74	7.5	54
	M12	12.0	1.75	98	10.0	72	118	12.0	87
			1.25	108	11.0	80	137	14.0	101
	M14	14.0	1.5	177	18.0	130	206	21.0	152

1. **Special parts are excluded.**
2. **This standard is applicable to bolts having the following marks embossed on the bolt head.**

* : Nominal diameter

Grade	Mark
4T	4
7T	7
9T	9

M 6

- Nominal diameter of bolt threads (Unit: mm)
- Metric screw threads

Z.ONE.DATSUN

MAINTENANCE

SECTION MA

CONTENTS

PRE-DELIVERY INSPECTION ITEMS .....MA- 2
GENERAL MAINTENANCE .....MA- 3
PERIODIC MAINTENANCE (Except for Europe) .....MA- 4
PERIODIC MAINTENANCE (For Europe except U.K.) .....MA- 6
PERIODIC MAINTENANCE (For U.K.) .....MA- 8
RECOMMENDED FLUIDS AND LUBRICANTS MA-10
ENGINE MAINTENANCE MA-12
CHASSIS AND BODY MAINTENANCE MA-21
SERVICE DATA AND SPECIFICATIONS (S.D.S.) MA-31

Z.ONE.DATSUN

PRE-DELIVERY INSPECTION ITEMS

Shown below are Pre-delivery Inspection Items required for the new vehicle. It is recommended that necessary items other than those listed here be added, paying due regard to the conditions in each country.

Perform applicable items on each model. Consult text of this section for specifications.

UNDER HOOD — engine off

- ☐ Radiator coolant level and coolant hose connections for leaks
- ☐ Battery fluid level, specific gravity and conditions of battery terminals
- ☐ Drive belts tension
- ☐ Fuel filter for water or dusts, and fuel lines and connections for leaks
- ☐ Engine oil level and oil leaks
- ☐ Clutch and brake reservoir fluid level and fluid lines for leaks
- ☐ Windshield and rear window washer and headlamp cleaner reservoir fluid level
- ☐ Power steering reservoir fluid level and hose connections for leaks

ON INSIDE AND OUTSIDE

- ☐ Remove front spring/strut spacer (If applicable)
- ☐ Operation of all instruments, gauges, lights and accessories
- ☐ Operation of horn(s), wiper and washer
- ☐ Steering lock for operation
- ☐ Check air conditioner for gas leaks
- ☐ Front and rear seats, and seat belts for operation
- ☐ All moldings, trims and fittings for fit and alignment
- ☐ All windows for operation and alignment
- ☐ Hood, trunk lid, door panels for fit and alignment
- ☐ Latches, keys and locks for operation
- ☐ Weatherstrips for adhesion and fit
- ☐ Headlamp aiming
- ☐ Tighten wheel nuts (Inc. inner nuts if applicable)
- ☐ Tire pressure (Inc. spare tire)
- ☐ Check front wheels for toe-in
- ☐ Install clock/voltmeter/room lamp fuse (If applicable)
- ☒ Install deodorizing filter to air purifier (If applicable)
- ☒ Remove wiper blade protectors (If applicable)

UNDER BODY

- ☐ Manual transmission/transaxle, transfer and differential gear oil level
- ☐ Brake and fuel lines and oil/fluid reservoirs for leaks
- ☐ Tighten bolts and nuts of steering linkage and gear box, suspension, propeller shafts and drive shafts
- ☒ Tighten rear body bolts and nuts (Models with wooden bed only)

ROAD TEST

- ☐ Clutch operation
- ☐ Parking brake operation
- ☐ Service brake operation
- ☐ Automatic transmission/transaxle shift timing and kickdown
- ☐ Steering control and returnability
- ☐ Engine performance
- ☐ Squeaks and rattles

ENGINE OPERATING AND HOT

- ☐ Adjust idle mixture and speed (and ignition timing*1)
- ☐ Automatic transmission/transaxle fluid level
- ☒ Engine idling and stop knob operation (Diesel only)

FINAL INSPECTION

- ☐ Install necessary parts (outside mirror, wheel covers, seat belts, mat, carpet or mud flaps)
- ☐ Inspect for interior and exterior metal and paint damage
- ☐ Check for spare tire, jack, tools (wheel chock), and literature
- ☐ Wash, clean interior and exterior

*1: Not required on models with a direct ignition system

[x] Not applicable to this model.

General maintenance includes those items which should be checked during the normal day-to-day operation of the vehicle. They are essential if the vehicle is to continue operating properly. The owners can perform the checks and inspections themselves or they can have their NISSAN dealers do them for a nominal charge.

Item	Reference pages
OUTSIDE THE VEHICLE The maintenance items listed here should be performed from time to time, unless otherwise specified.	
Tires Check the pressure with a gauge periodically when at a service station, including the spare, and adjust to the specified pressure if necessary. Check carefully for damage, cuts or excessive wear.	—
Windshield wiper blades Check for cracks or wear if they do not wipe properly.	—
Doors and engine hood Check that all doors , the engine hood, the trunk lid and back door operate properly. Also ensure that all latches lock securely. Lubricate if necessary. Make sure that the secondary latch keeps the hood from opening when the primary latch is released. When driving in areas using road salt or other corrosive materials, check for lubrication frequently.	MA-29
Tire rotation Tires should be rotated every 10,000 km (6,000 miles) for non-turbo models.	MA-26
INSIDE THE VEHICLE The maintenance items listed here should be checked on a regular basis, such as when performing periodic maintenance, cleaning the vehicle, etc.	
Lights Make sure that the headlights, stop lights, tail lights, turn signal lights, and other lights are all operating properly and installed securely. Also check headlight aim.	—
Warning lights and chimes Make sure that all warning lights and chimes are operating properly.	—
Steering wheel Check for change in the steering conditions, such as excessive free play, hard steering or strange noises. **Free play: Less than 35 mm (1.38 in)**	—
UNDER THE HOOD AND VEHICLE The maintenance items listed here should be checked periodically e.g. each time you check the engine oil or refuel.	
Windshield washer fluid Check that there is adequate fluid in the tank.	—
Engine coolant level Check the coolant level when the engine is cold.	MA-14
Engine oil level Check the level after parking the vehicle on a level spot and turning off the engine.	MA-17
Brake and clutch fluid level Make sure that the brake and clutch fluid level is between the "MAX" and "MIN" lines on the reservoir.	MA-21, 24
Battery Check the fluid level in each cell. It should be between the "MAX" and "MIN" lines.	—

PERIODIC MAINTENANCE (Except for Europe)

The following tables show the normal maintenance schedule. Depending upon weather and atmospheric conditions, varying road surfaces, individual driving habits and vehicle usage, additional or more frequent maintenance may be required.

Periodic maintenance beyond the last period shown on the tables requires similar maintenance.

MAINTENANCE OPERATION Perform either at number of kilometers (miles) or months, whichever comes first		MAINTENANCE INTERVAL									Reference page
	km x 1,000	1	10	20	30	40	50	60	70	80	
	(Miles x 1,000)	(0.6)	(6)	(12)	(18)	(24)	(30)	(36)	(42)	(48)	
	Months	—	6	12	18	24	30	36	42	48	
ENGINE AND EMISSION CONTROL	**Underhood and under vehicle**										
Check drive belts for cracks, fraying, wear & tension						X				X	MA-12
Change engine anti-freeze coolant (Ethylene glycol base, LLC)						X				X	MA-13
Check cooling system			X		X		X			X	MA-14
Check fuel lines						X				X	MA-15
Replace air cleaner filter (Viscous paper type)★						X				X	MA-16
Change engine oil (Use API SF or SG oil)★		X	X	X	X	X	X	X	X	X	MA-16
Change engine oil filter★		X	X	X	X	X	X	X	X	X	MA-17
Replace fuel filter★						X				X	MA-18
Replace spark plugs (PLATINUM-TIPPED type)					Every 100,000 km (60,000 miles)						MA-18
Check exhaust gas sensor						X				X	MA-20
Check vapor lines						X				X	MA-19
Replace timing belt					Every 100,000 km (60,000 miles)						EM-13
CHASSIS AND BODY	**Underhood**										
Check brake, clutch & automatic transmission fluid level & leaks★		X	X	X	X	X	X	X	X	X	MA-21, 22, 24
Change brake fluid★						X				X	MA-25
Check brake booster vacuum hoses, connections & check valve						X				X	MA-25
Check power steering fluid & lines			X		X		X			X	MA-27
	Under vehicle										
Check brake, clutch & exhaust systems for proper attachment, leaks, cracks, chafing, abrasion, deterioration, etc.		X	X	X	X	X	X	X	X	X	MA-21, 24, 28
Check oil level in manual transmission & differential gear★			X		X		X			X	MA-21, 24
Check steering gear & linkage, axle & suspension parts & propeller shaft for damage, loose & missing parts & lubrication★		X		X		X		X		X	MA-23, 27 FA-6, RA-5
	Outside and inside										
Check wheel alignment, if necessary, rotate & balance wheels			X		X		X			X	MA-26, FA-7
Check brake pads, discs & other brake components for wear, deterioration & leaks★		X	X	X	X	X	X	X	X	X	MA-25
Lubricate locks, hinges & hood latch			X		X		X			X	MA-28
Check seat belts, buckles, retractors, anchors & adjuster			X		X		X			X	MA-28
Check foot brake, parking brake & clutch for free play, stroke & operation		X		X		X		X		X	CL-7, BR-7, 22

NOTE: Maintenance items with "★" should be performed more frequently according to "Maintenance under Severe Driving Conditions".

Check: Check. Correct or replace if necessary.

Maintenance under Severe Driving Conditions

The maintenance intervals shown on the preceding page are for normal operating conditions. If the vehicle is mainly operated under severe driving conditions as shown below, more frequent maintenance must be performed on the following items as shown in the table.

SEVERE DRIVING CONDITIONS

A — Driving under dusty conditions
B — Driving repeatedly short distances
C — Towing a trailer
D — Extensive idling
E — Driving in extremely adverse weather conditions or in areas where ambient temperatures are either extremely low or extremely high
F — Driving in high humidity areas or in mountainous areas
G — Driving in areas using salt or other corrosive materials
H — Driving on rough and/or muddy roads or in the desert
I — Driving with frequent use of braking or in mountainous areas

Driving condition	Maintenance item	Maintenance operation	Maintenance interval	Reference page
A	Air cleaner filter	Replace	More frequently	MA-16
A B C D	Engine oil & oil filter	Replace	Every 5,000 km (3,000 miles) or 3 months	MA-16, 17
A E	Fuel filter	Replace	Every 20,000 km (12,000 miles) or 12 months	MA-16
F	Brake fluid	Replace		MA-25
C H	Automatic & manual transmission oil, & differential gear oil	Replace	Every 40,000 km (24,000 miles) or 24 months	MA-22, 23, 24
G H	Steering gear & linkage, axle & suspension parts & propeller shaft	Check	Every 10,000 km (6,000 miles) or 6 months	MA-23, 27 FA-6, RA-5
G	Locks, hinges & hood latch	Lubricate		MA-29
A C G H I	Brake pads, discs & other brake components	Check	Every 5,000 km (3,000 miles) or 3 months	MA-25

Maintenance operation: Check = Check. Correct or replace if necessary.

PERIODIC MAINTENANCE (For Europe except U.K.)

The following tables show the normal maintenance schedule. Depending upon weather and atmospheric conditions, varying road surfaces, individual driving habits and vehicle usage, additional or more frequent maintenance will be required.
Periodic maintenance beyond the last period shown on the tables requires similar maintenance.

STANDARD & THE FIRST FREE SERVICES

MAINTENANCE OPERATION		MAINTENANCE INTERVAL					
Perform the standard service on a yearly basis, but on a mileage basis when driving more than 20,000 km (12,000 miles) a year.	**Months**	**—**	**12**	**24**	**36**	**48**	Reference page
	km x 1,000	1	20	40	60	80	
	(Miles x 1,000)	(0.6)	(12)	(24)	(36)	(48)	
Engine	**Underhood and under vehicle**						
Check drive belts for cracks, fraying, wear & tension				X		X	MA-12
Change engine anti-freeze coolant (Ethylene glycol base)				X		X	MA-13
Check cooling system		X	X	X	X	X	MA-14
Check fuel lines				X		X	MA-15
Replace air cleaner filter (Viscous paper type)★				X		X	MA-16
Replace timing belt		Every 100,000 km (60,000 miles)					EM-13
Replace fue filter★				X		X	MA-16
Replace spark plugs (Use PLATINUM-TIPPED type.)		Every 100,000 km (60,000 miles)					MA-18
Check exhaust gas sensor (Except models for Sweden)				X		X	MA-20
Check vapor lines	See NOTE (1)			X		X	MA-19
Chassis and body	**Underhood**						
Check brake & clutch fluid level & leaks		X	X	X	X	X	MA-21, 24
Check automatic transmission fluid level & leaks★				X		X	MA-22
Change brake fluid★				X		X	MA-25
Check brake booster vacuum hoses, connections & check valve				X		X	MA-25
Check power steering fluid & lines		X	X	X	X	X	MA-26
Check A.S.C.D. vacuum hoses		X	X	X	X	X	MA-21
	Under vehicle						
Check brake & clutch for proper attachment, leaks, cracks, chafing, abrasion, deterioration, etc.		X	X	X	X	X	MA-21, 24
Check oil level in manual transmission & differential gear★				X		X	MA-21, 24
Check steering gear & linkage, axle & suspension parts, propeller shaft, drive shafts & exhaust system for damage, loose & missing parts, lubrication & leaks★		X		X		X	MA-23, 26, 27, 28 FA-6, RA-5, 7
Check SUPER HICAS linkage★				X		X	MA-27
	Outside and inside						
Check wheel alignment. If necessary balance wheels			X	X	X	X	MA-26 FA-7
Check brake pads, discs & other brake components for wear, deterioration & leaks★			X	X	X	X	MA-25
Check seat belts, buckles, retractors, anchors & adjuster				X		X	MA-29
Check foot brake, parking brake & clutch for free play, stroke & operation			X	X	X	X	CL-7, BR-7, 22
Check body corrosion				Annually			MA-30

NOTE: (1) For models for Sweden perform at the first 80,000 km (48,000 miles), and then every 40,000 km (24,000 miles) or 24 months, whichever comes first.
(2) Maintenance items with "★" should be performed more frequently according to "Maintenance under severe driving conditions".

Check: Check. Correct or replace if necessary.

ENGINE OIL SERVICE

MAINTENANCE OPERATION		MAINTENANCE INTERVAL								
Perform at the specified time generally, but perform at the specified mileage when driving more than 10,000 km (6,000 miles) a year.	**Months**	**12**	**24**	**36**	**48**	**60**	**72**	**84**	**96**	Reference page
	km x 1,000	10	20	30	40	50	60	70	80	
	(Miles x 1,000)	(6)	(12)	(18)	(24)	(30)	(36)	(42)	(48)	
Underhood										
Change engine oil (Use API SG oil only)★		X	X	X	X	X	X	X	X	MA-16
Change engine oil filter (Use Nissan PREMIUM type or equivalent.)★		X	X	X	X	X	X	X	X	MA-17

NOTE: Maintenance items with "★" should be performed more frequently according to "Maintenance under severe driving conditions".

MAINTENANCE UNDER SEVERE DRIVING CONDITIONS

The maintenance intervals shown on the preceding pages are for normal operating conditions. If the vehicle is mainly operated under severe driving conditions as shown below, more frequent maintenance must be performed on the following items as shown in the table.

Severe driving conditions

A — Driving under dusty conditions
B — Driving repeatedly short distances
C — Towing a trailer
D — Extensive idling
E — Driving in extremely adverse weather conditions or in areas where ambient temperatures are either extremely low or extremely high
F — Driving in high humidity areas or in mountainous areas
G — Driving in areas using salt or other corrosive materials
H — Driving on rough and/or muddy roads or in the desert
I — Driving with frequent use of braking or in mountainous areas

Driving condition	Maintenance item	Maintenance operation	Maintenance interval	Reference page
Standard service				
A	Air cleaner filter	Replace	Every 12 months or 20,000 km (12,000 miles)	MA-16
A . . . E	Fuel filter	Replace		MA-16
. . . . . F . . .	Brake fluid	Replace		MA-25
. . . . . G H .	Steering gear & linkage, axle & suspension parts, propeller shaft, drive shafts, exhaust system & SUPER HICAS linkage	Check		MA-23, 26, 27, 28 FA-6, RA-5, 7
. . C . . . . H .	Automatic & manual transmission oil, & differential gear oil	Replace	Every 24 months or 40,000 km (24,000 miles)	MA-22, 23, 24
A . C . . . G H I	Brake pads, discs & other brake components	Check	Every 6 months or 10,000 km (6,000 miles)	MA-25
Engine oil service				
A B C D	Engine oil	Replace	Every 6 months or 5,000 km (3,000 miles)	MA-16
A B C D	Engine oil filter	Replace		MA-17

Maintenance operation: Check = Check. Correct or replace if necessary.

PERIODIC MAINTENANCE (For U.K.)

The following tables show the normal maintenance schedule. Depending upon weather and atmospheric conditions, varying road surface, individual driving habits and vehicle usage, additional or more frequent maintenance will be required.

Periodic maintenance beyond the last period shown on the tables requires similar maintenance.

MAINTENANCE OPERATION Perform either at number of miles (kilometers) or months, whichever comes first.	Miles x 1,000	0.6	9	18	27	36	45	54	63	72	Reference page
	(km x 1,000)	(1)	(15)	(30)	(45)	(60)	(75)	(90)	(105)	(120)	
	Months	—	6	12	18	24	30	36	42	48	
ENGINE MAINTENANCE	**Under bonnet and under vehicle**										
Replace timing belt				Every 60,000 miles (100,000 km)							EM-13
Change engine anti-freeze coolant (Ethylene glycol base)						X				X	MA-13
Check cooling system				X		X		X		X	MA-14
Check fuel lines						X				X	MA-15
Check drive belts for cracks, fraying, wear & tension				X		X		X		X	MA-12
Replace air cleaner filter (Viscous paper type)★						X				X	MA-16
Change engine oil (Use API SG oil only)★		Every 6,000 miles (10,000 km) or 12 months									MA-16
Change engine oil filter (Use Nissan PREMIUM type or equivalent)★		Every 6,000 miles (10,000 km) or 12 months									MA-17
Replace fuel filter				X		X		X		X	MA-16
Replace spark plugs (Use PLATINUM-TIPPED type)				Every 60,000 miles (100,000 km)							MA-18
CHASSIS AND BODY MAINTENANCE	**Under bonnet**										
Check brake & clutch fluid level & leaks★		X	X	X	X	X	X	X	X	X	MA-21, 24
Check automatic transmission fluid level & leaks★			X		X		X		X		MA-22
Change brake fluid			X		X		X		X		MA-25
Check brake booster vacuum hoses, connections & check valve						X				X	MA-25
Check power steering fluid & lines		X	X	X	X	X	X	X	X	X	MA-26
Check A.S.C.D. hoses			X		X		X		X		MA-21
	Under vehicle										
Check brake & clutch for proper attachment, leaks, cracks, chafing, abrasion, deterioration, etc.		X	X	X	X	X	X	X	X	X	MA-21, 24
Check oil level in manual transmission & differential gear★			X		X		X		X		MA-21, 24
Check steering gear & linkage, axle & suspension parts, propeller shaft, drive shafts & exhaust system for damaged, loose & missing parts, lubrication & leaks★		X	X		X		X		X		MA-23, 26, 27, 28 FA-6, RA-5, 7
Check SUPER HICAS linkage★			X		X		X		X		MA-27
	Outside and inside										
Check wheel alignment, if necessary balance wheels			X		X		X		X		MA-26 FA-7
Check brake pads, disc & other brake components for wear, deterioration & leaks★		X	X	X	X	X	X	X	X		MA-25
Check seat belts, buckles, retractors & adjuster			X		X		X		X		MA-29
Check foot brake, hand brake & clutch for free play, stroke & operation		X	X	X	X	X	X	X	X		CL-7, BR-7, 22
Check body corrosion					Annually						MA-30

NOTE: Maintenance items with "★" should be performed more frequently according to "Maintenance under severe driving conditions".

Check: Check. Correct or replace if necessary.

MAINTENANCE UNDER SEVERE DRIVING CONDITIONS

The maintenance intervals shown on the preceding page are for normal operating conditions. If the vehicle is mainly operated under severe driving conditions as shown below, more frequent maintenance must be performed on the following items as shown in the table.

Severe driving conditions

A — Driving under dusty conditions
B — Driving repeatedly short distances
C — Towing a trailer
D — Extensive idling
E — Driving in areas using salt or other corrosive materials
F — Driving on rough and/or muddy roads or in the desert
G — Driving with frequent use of braking or in mountainous areas

Driving condition	Maintenance item	Maintenance operation	Maintenance interval	Reference page
A	Air cleaner filter	Replace	More frequently	MA-16
A B C D . . .	Engine oil & oil filter	Replace	Every 3,000 miles (5,000 km) or 6 months	MA-16, 17
. . C . . F .	Automatic & manual transmission oil, differential gear oil	Replace	Every 36,000 miles (60,000 km) or 24 months	MA-22, 23, 24
. . . . E F .	Steering gear & linkage, axle & suspension parts, propeller shaft, drive shafts, exhaust system & SUPER HICAS linkage	Check	Every 9,000 miles (15,000 km) or 6 months	MA-23, 26, 27, 28 FA-6, RA-5, 7
A . C . E F G	Brake pads, discs & other brake components	Check	Every 4,500 miles (7,500 km) or 3 months	MA-25

Maintenance operation: Check = Check. Correct or replace if necessary.

Fluids and Lubricants

		Capacity (Approximate)		Recommended fluids and lubricants
		Liter	Imp measure	
Engine oil (Refill)				
With oil filter		3.4	3 qt	For models for Europe: API SG*
Without oil filter		3.0	2-5/8 qt	Except for models for Europe: API SF or SG*
Cooling system (With reservoir)		10.0	8-3/4 qt	Anti-freeze coolant (Ethylene glycol base)
Manual transmission gear oil		2.8	4-7/8 pt	API GL-4*
	Europe model	3.1	5-1/2 pt	
Differential gear oil		1.5	2-5/8 pt	API GL-5*
	Europe model	2.1	3-3/4 pt	
Automatic transmission fluid		7.7	6-3/4 qt	Type DEXRON™
	Europe model	8.7	7-5/8 qt	
Power steering fluid		1.3	1-1/8 qt	Type DEXRON™
	With SUPER HICAS	2.0	1-3/4 qt	
Brake and clutch fluid		—	—	DOT 3 (US FMVSS No. 116)
Multi-purpose grease		—	—	NLGI No. 2 (Lithium soap base)

*For further details, see "Recommended SAE viscosity number".

SAE Viscosity Number

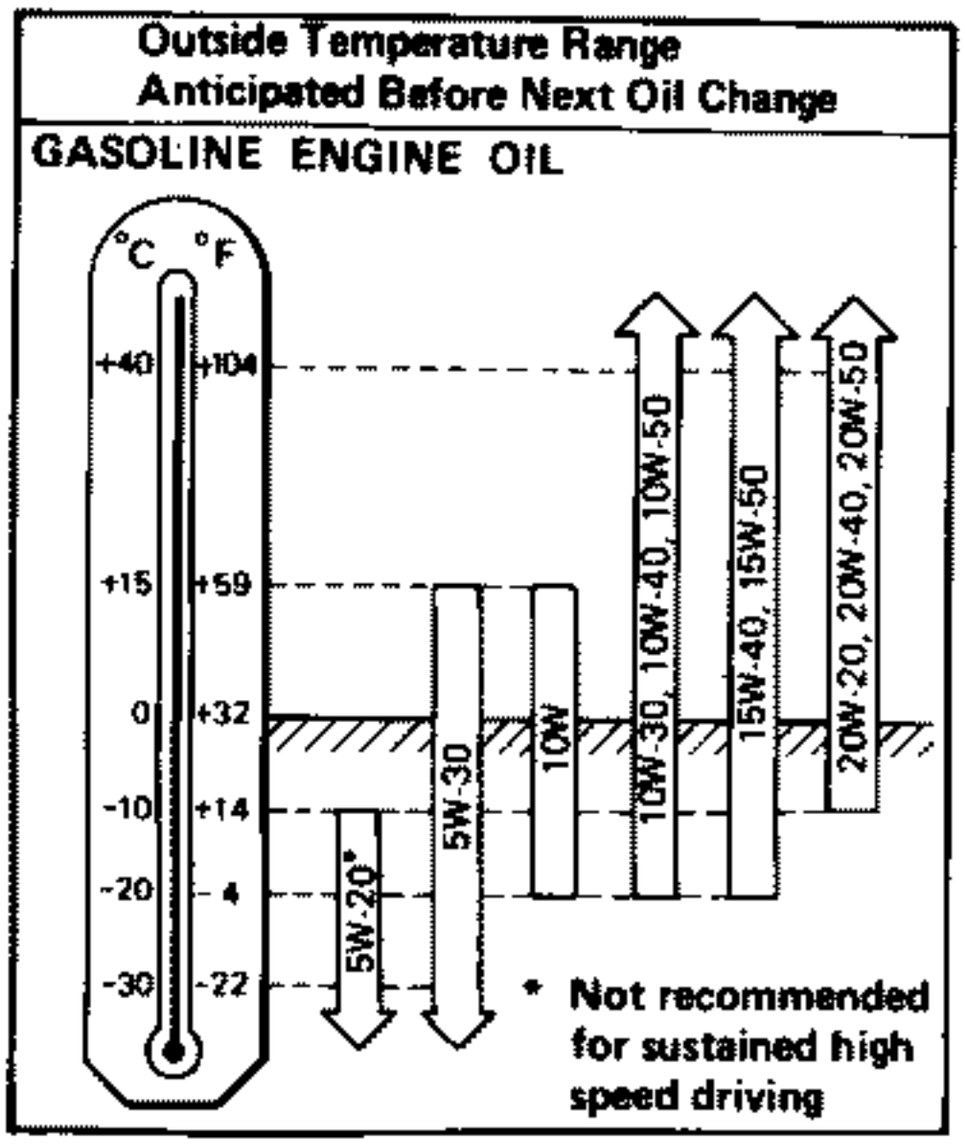

TI0005

- For warm and cold areas: 10W-30 is preferable for ambient temperatures above –20°C (–4°F).
- For hot areas: 20W-40 and 20W-50 are suitable.
- On turbo engines, 5W-20 is not recommended. 5W-30 should be used only under extremely cold conditions.

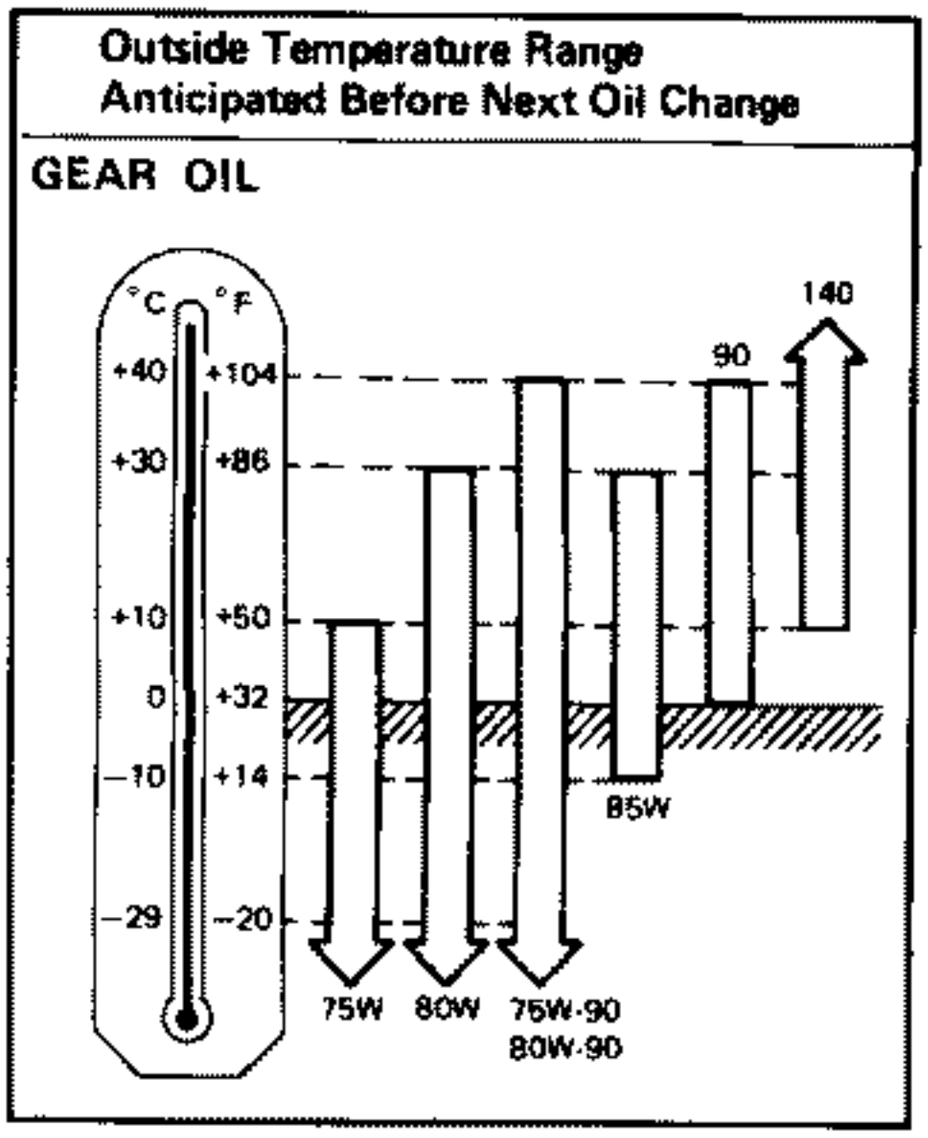

TI0003

- For warm and cold areas: 75W-90 for the transmission and 80W-90 for the differential gear are preferable.
- For hot areas: 90 is suitable for ambient temperatures below 40°C (104°F).

Checking Drive Belts

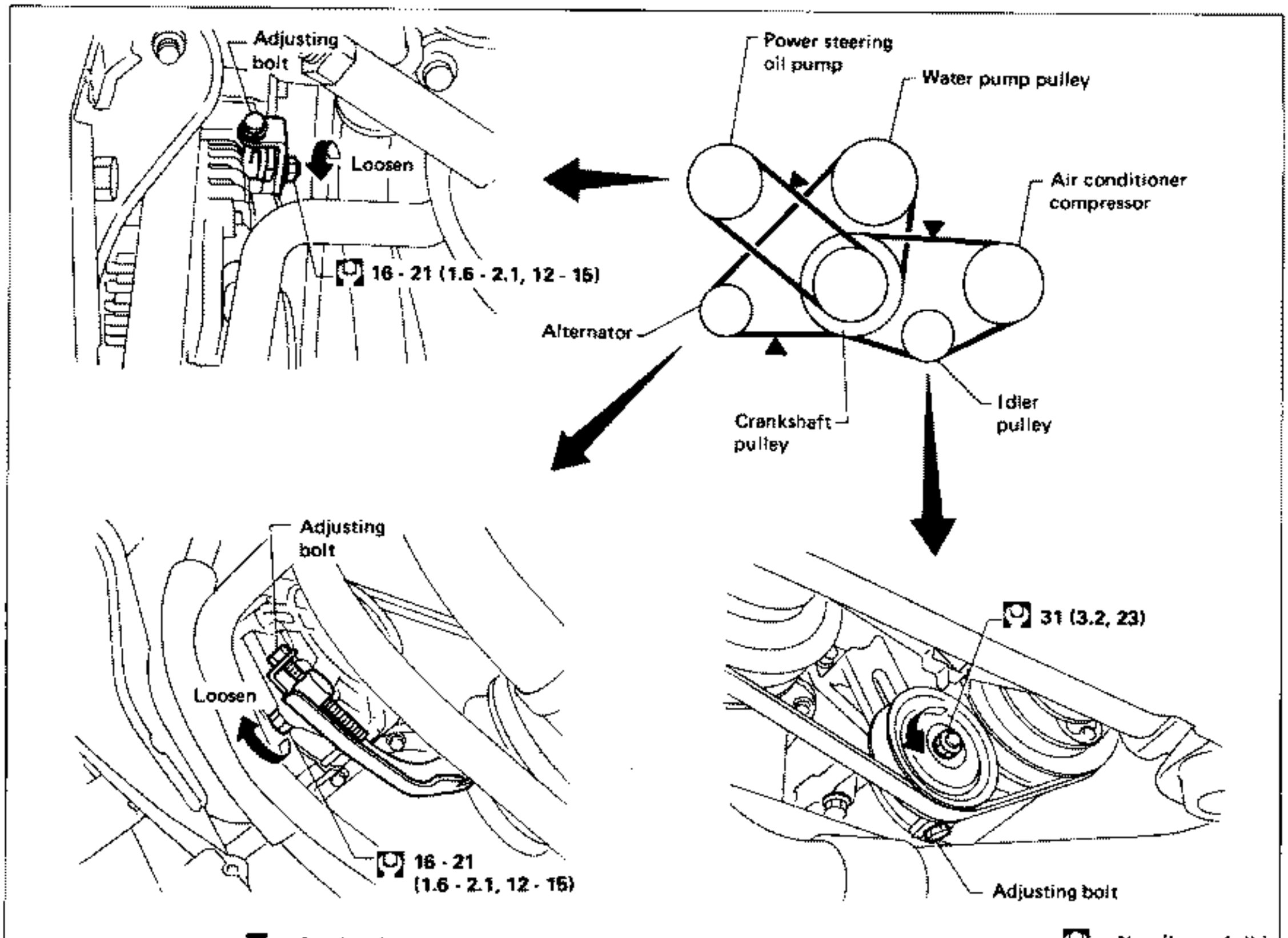

1. Inspect for cracks, fraying, wear or oil adhesion. If necessary, replace with a new one.
2. Inspect drive belt deflection by pushing on the belt midway between pulleys.

Adjust if belt deflection exceed the limit.

Belt deflection:

Unit: mm (in)

	Used belt deflection		Deflection of new belt
	Limit	Deflection after adjustment	
Alternator	11.5 (0.453)	7 - 8 (0.28 - 0.31)	6.5 - 7.5 (0.256 - 0.295)
Air conditioner compressor	12.5 (0.492)	8 - 9 (0.31- 0.35)	7 - 8 (0.28 - 0.31)
Power steering oil pump	19 (0.75)	12 - 13.5 (0.472 - 0.531)	10.5 - 11.5 (0.413 -0.453)
Applied pushing force	98 N (10 kg, 22 lb)		

Inspect drive belt deflection when engine is cold.

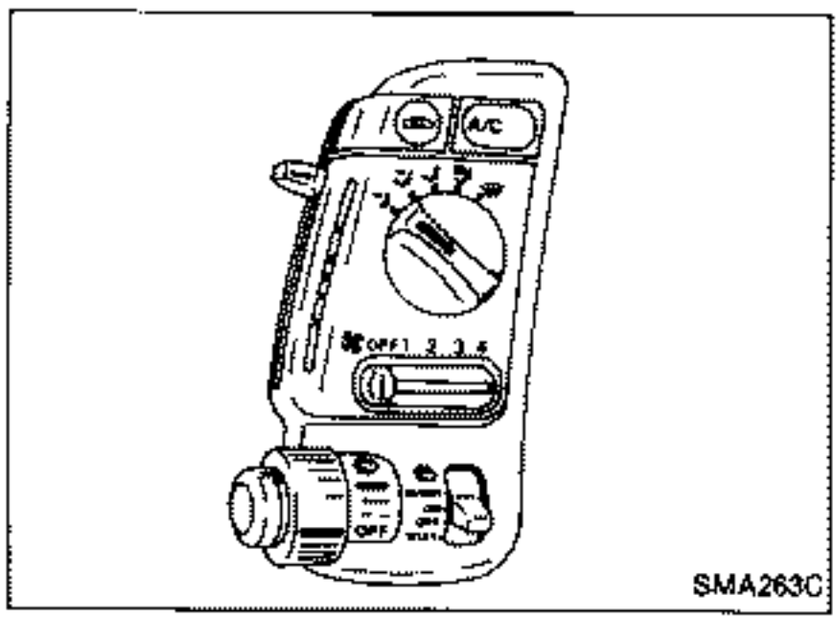

SMA263C

Changing Engine Coolant

WARNING:
To avoid the danger of being scalded, never change the coolant when the engine is hot.

MANUAL CONTROL

1. Turn ignition switch "ON" and set temperature control lever of manual air conditioner to maximum hot position.

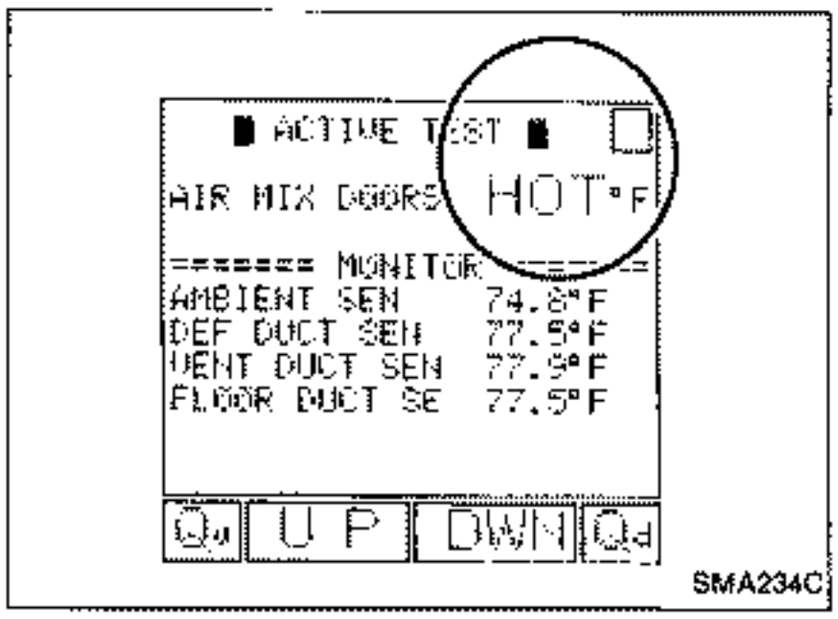

SMA234C

AUTOMATIC CONTROL

1. Perform "AIR MIX DOORS" test in "ACTIVE TEST" mode of "AUTO A/C" (Automatic Air Conditioner) system.
   Set "AIR MIX DOORS" at (full) HOT and wait 10 seconds before turning ignition switch off.

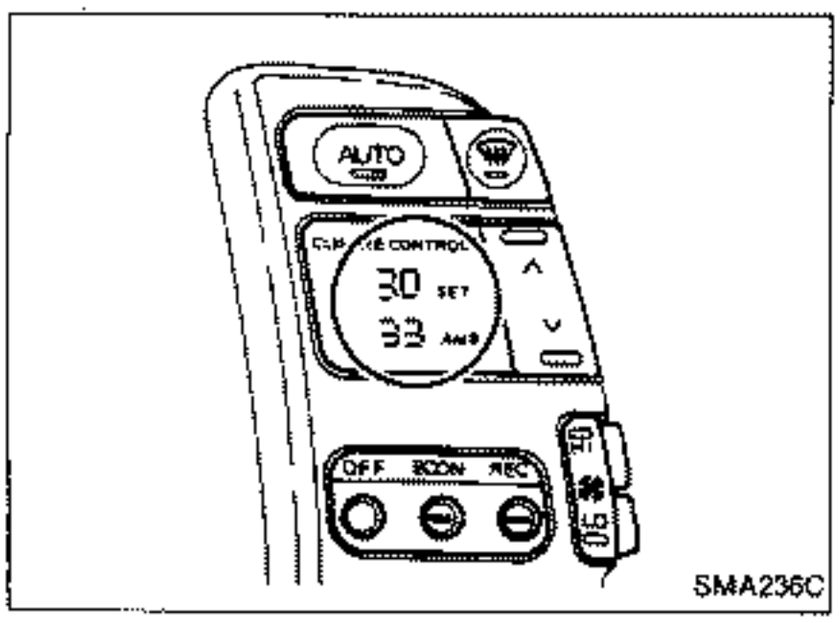

SMA236C

1. Perform self-diagnosis step 2 of Automatic Air Conditioner system, referring to the following notes:
   1) Turn ignition switch from "OFF" to "ON".
   2) Press both "AUTO" and "OFF" switches for at least 5 seconds.
   3) Press "AUTO" switch 2 times.
   4) Confirm indication of the A/C display shown at left.
   5) Wait 10 seconds before turning ignition switch off.

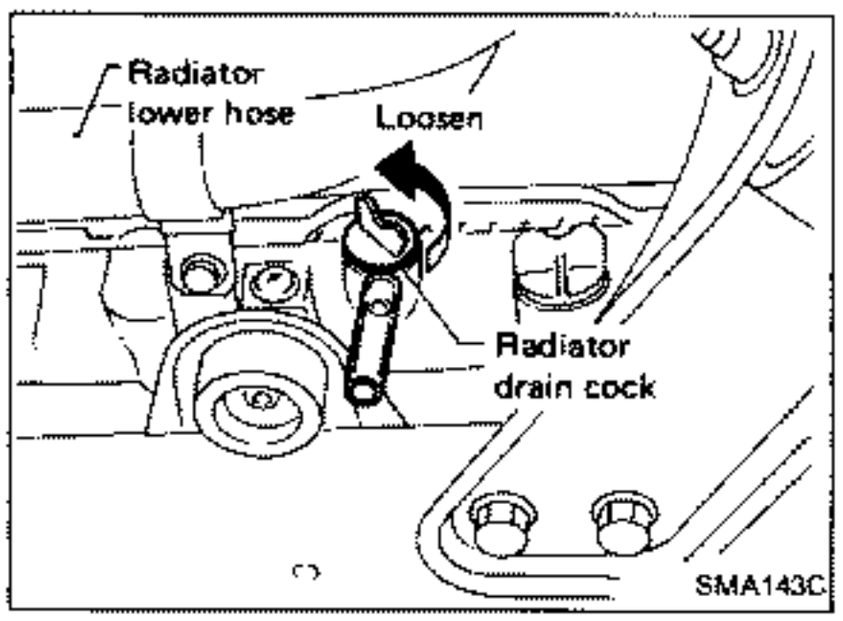

SMA143C

2. Open drain cock at the bottom of radiator, and remove radiator cap.

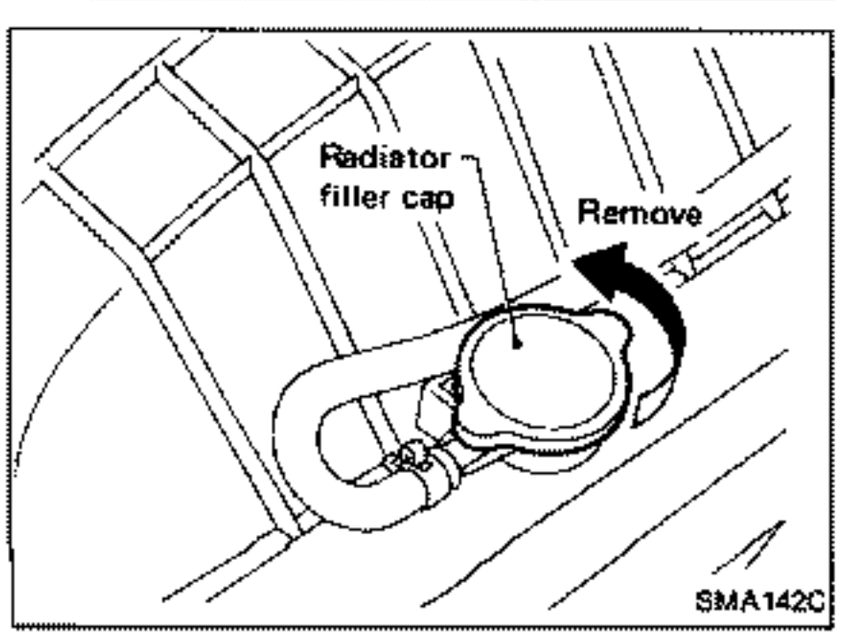

SMA142C

Changing Engine Coolant (Cont'd)

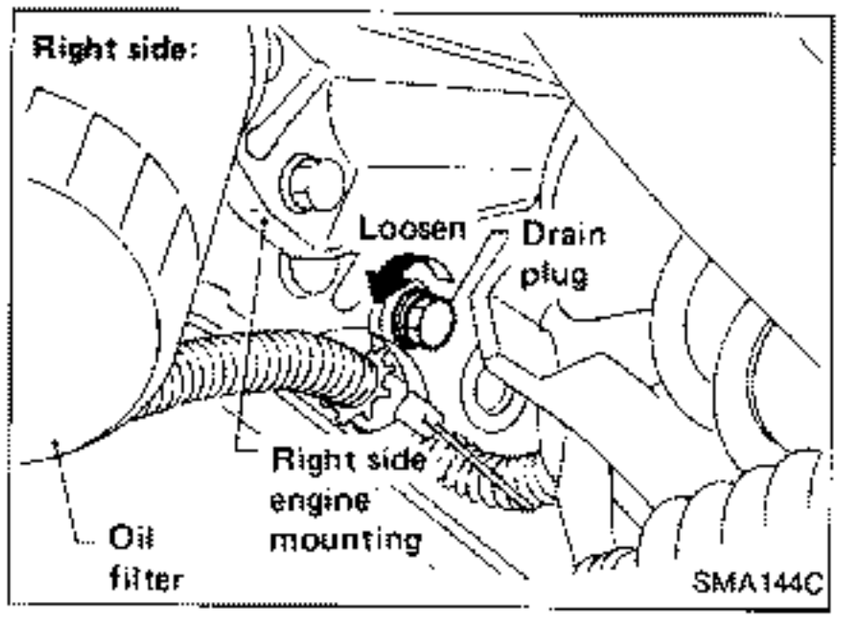

3. Open drain plugs on both sides of cylinder block.

- **Left side drain plug is located beside the left side engine mounting.**

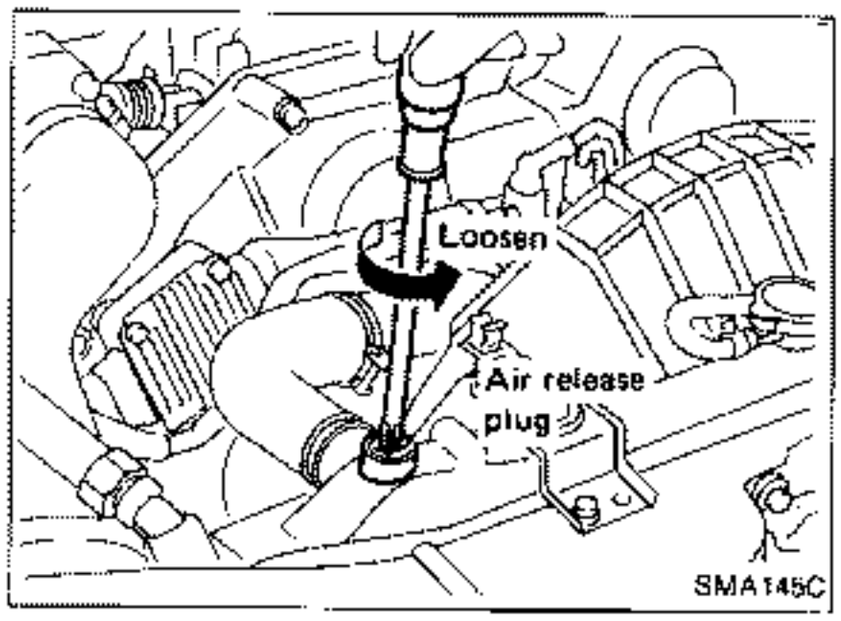

4. Open air release plug to drain coolant.
5. Flush cooling system by running fresh water through radiator.
6. Close drain cock and tighten drain plugs securely.

- **Apply sealant to the drain plug thread.**
  : 34 - 44 N·m
  (3.5 - 4.5 kg-m, 25 - 33 ft-lb)

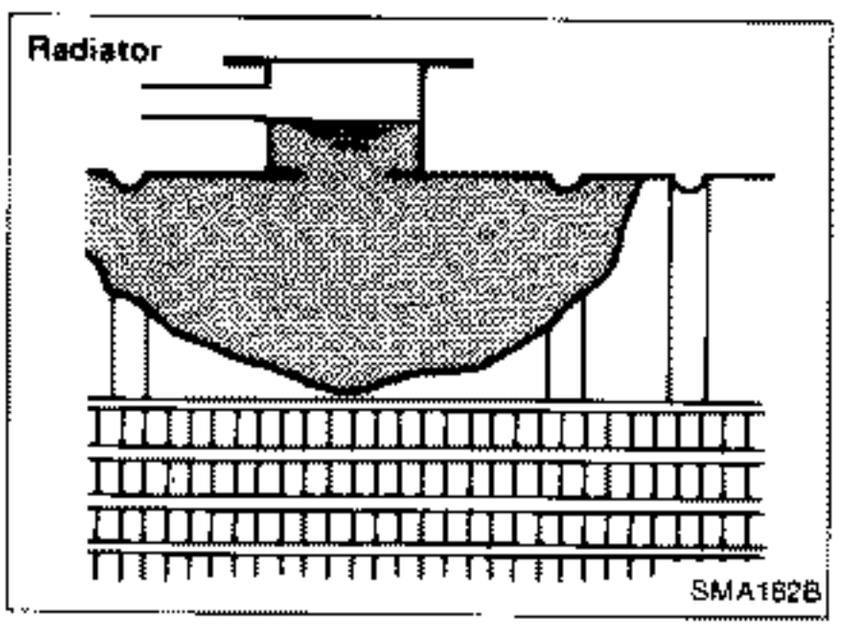

7. Fill radiator slowly with proper mixture of coolant and water. Fill reservoir tank up to the "H" level. Then install radiator cap and close air release plug.
   Coolant capacity (With reservoir tank):
   10.0ℓ (8-3/4 Imp qt)
   Reservoir tank:
   0.6ℓ (1/2 Imp qt)

Pour coolant through coolant filler neck slowly to allow air in system to escape.

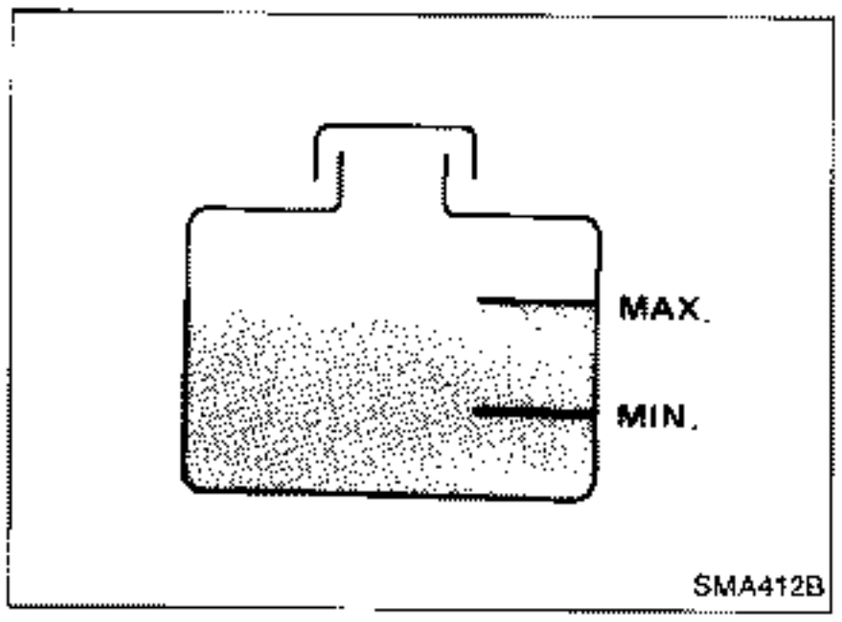

8. Start engine and warm it up until it reaches normal operating temperature. Then race engine 2 or 3 times under no-load. Watch coolant temperature gauge for signs of overheating.
9. Stop engine. After it completely cools down, refill radiator up to filler opening. Fill reservoir tank up to the "H" level.
10. Check drain cock and drain plug for any sign of leakage.

Checking Cooling System

CHECKING HOSES

Check hoses for improper attachment and for leaks, cracks, damage, loose connections, chafing and deterioration.

Checking Cooling System (Cont'd)

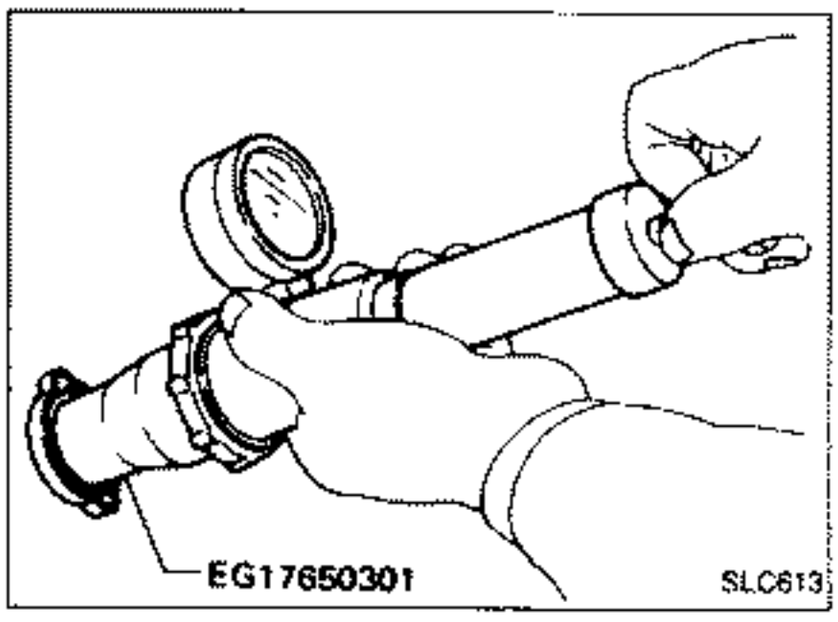

CHECKING RADIATOR CAP

Apply pressure to radiator cap with cap tester to see if it is satisfactory.

Radiator cap relief pressure:
78 - 98 kPa
(0.78 - 0.98 bar, 0.8 - 1.0 kg/cm^2, 11 - 14 psi)

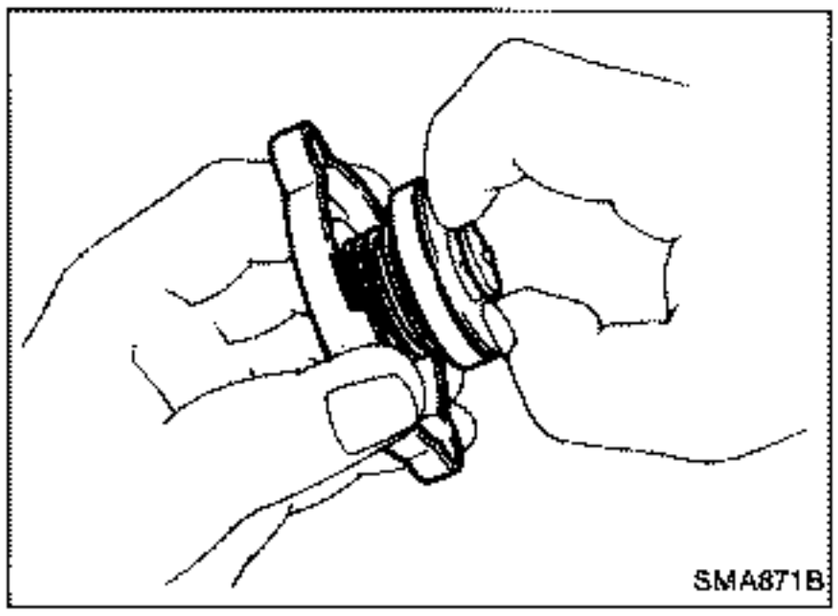

Pull the negative-pressure valve to open it. Check that it closes completely when released.

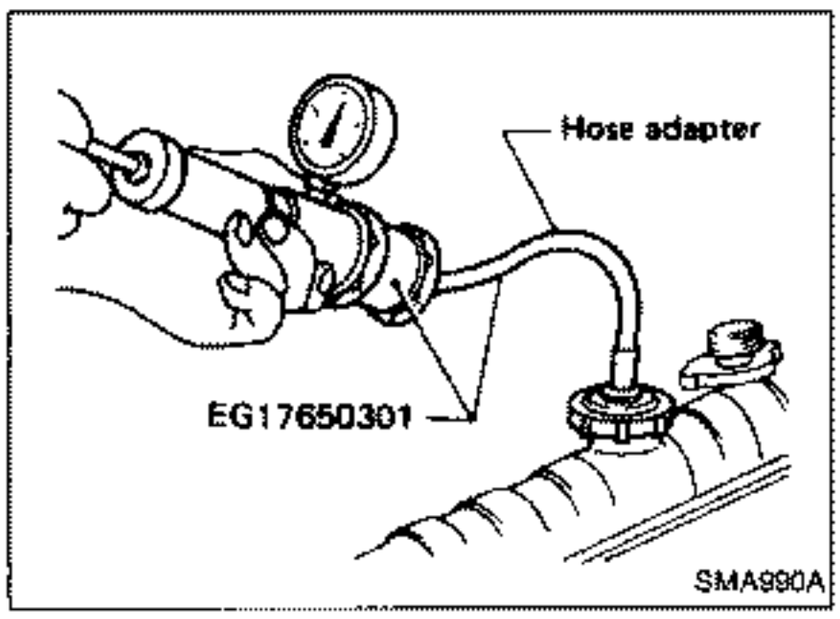

CHECKING COOLING SYSTEM FOR LEAKS

Apply pressure to the cooling system with cap tester to check for leakage.

Testing pressure:
98 kPa (0.98 bar, 1.0 kg/cm^2, 14 psi)

CAUTION:
Higher pressure than the specified value may cause damage to radiator.

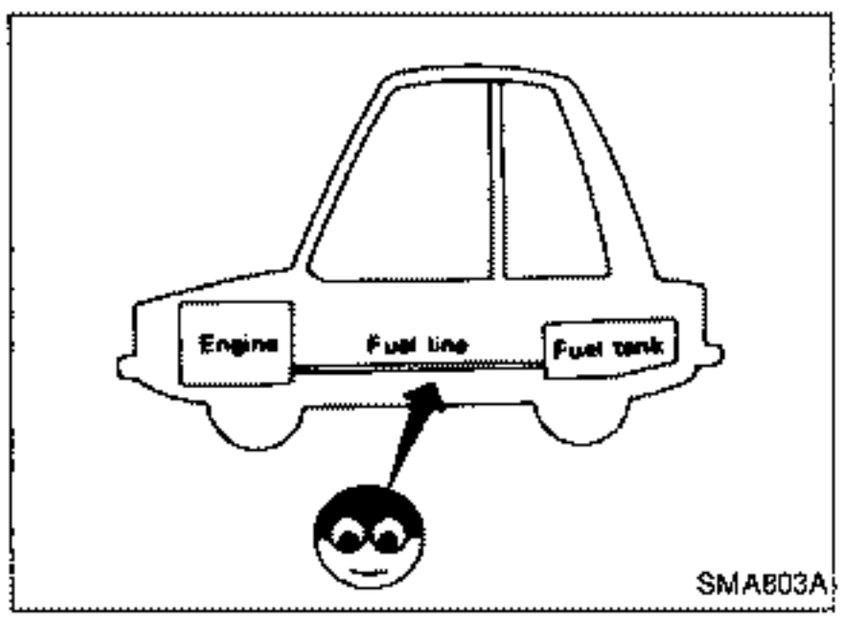

Checking Fuel Lines

Inspect fuel lines and tank for improper attachment and for leaks, cracks, damage, loose connections, chafing and deterioration.
If necessary, repair or replace faulty parts.

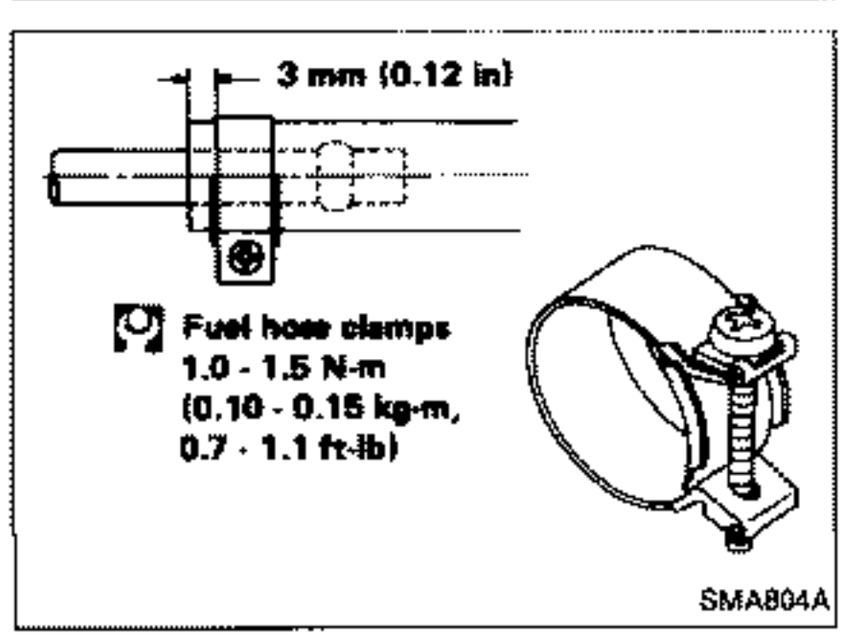

CAUTION:
Tighten high-pressure rubber hose clamp so that clamp end is 3 mm (0.12 in) from hose end.
Tightening torque specifications are the same for all rubber hose clamps.
Ensure that screw does not contact adjacent parts.

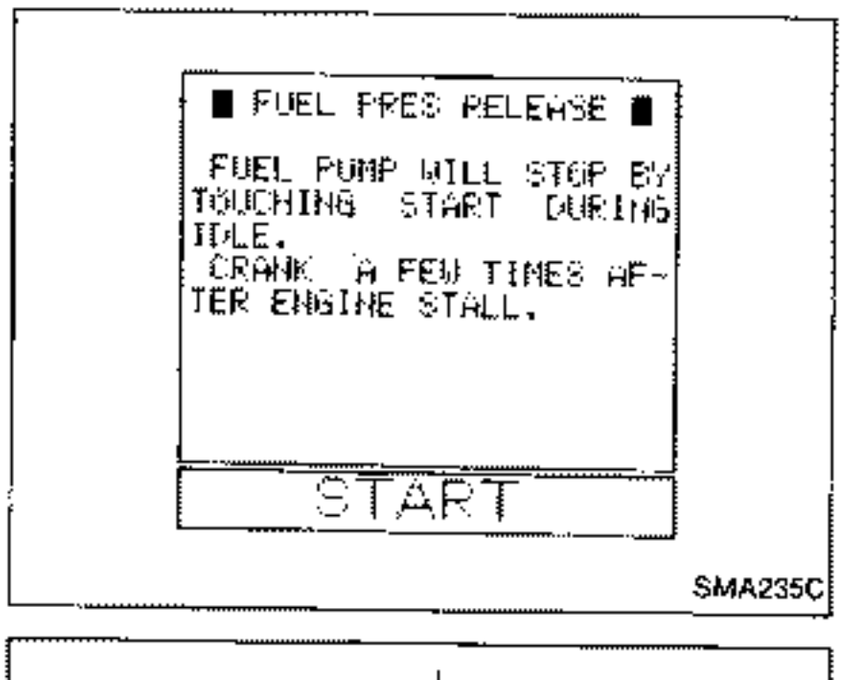

SMA235C

Changing Fuel Filter

WARNING:

Before removing fuel filter, release fuel pressure from fuel line to eliminate danger.

1. Perform "FUEL PRESSURE RELEASE" in "WORK SUPPORT" mode and release fuel pressure to zero.
2. Turn ignition switch off.
3. Disconnect fuel pump relay or fuel pump connector.
4. Start engine.
5. After engine stalls, crank engine two or three times to make sure that fuel pressure is released. Then turn ignition switch off and reconnect fuel pump relay or fuel pump connector.

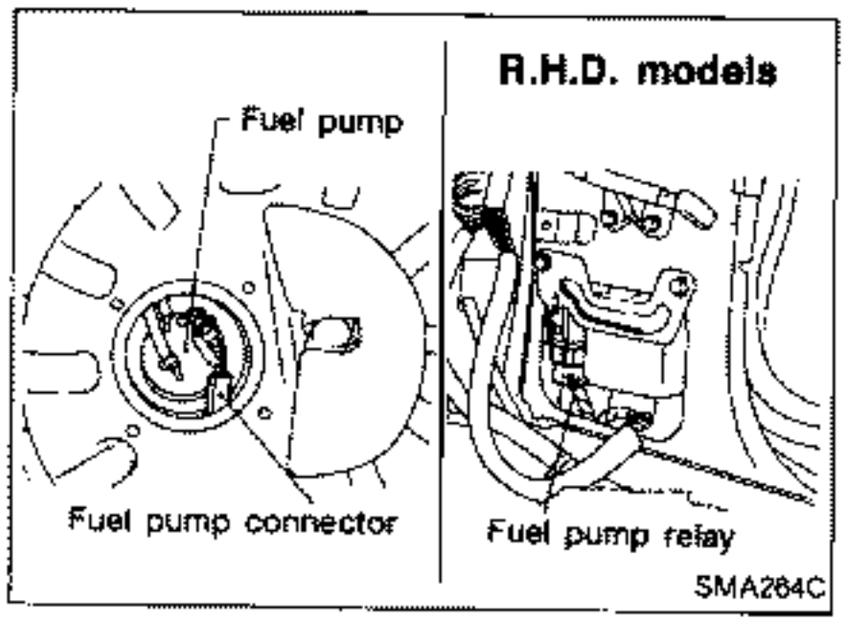

SMA264C

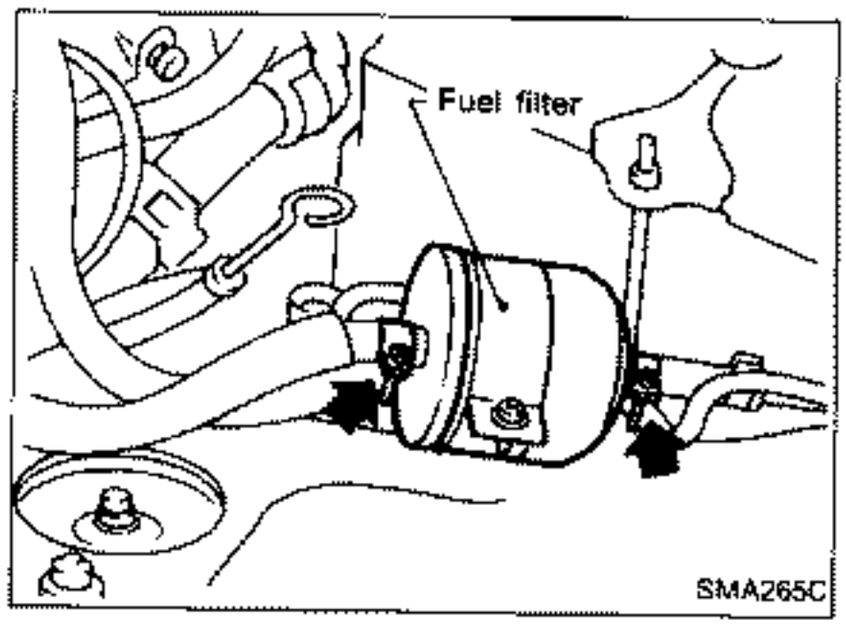

SMA265C

6. Loosen fuel hose clamps.
7. Replace fuel filter.

- **Be careful not to spill fuel over engine compartment. Place a shop towel to absorb fuel.**
- **Use a high-pressure type fuel filter. Do not use a synthetic resinous fuel filter.**
- **When tightening fuel hose clamps, refer to "Checking Fuel Lines".**

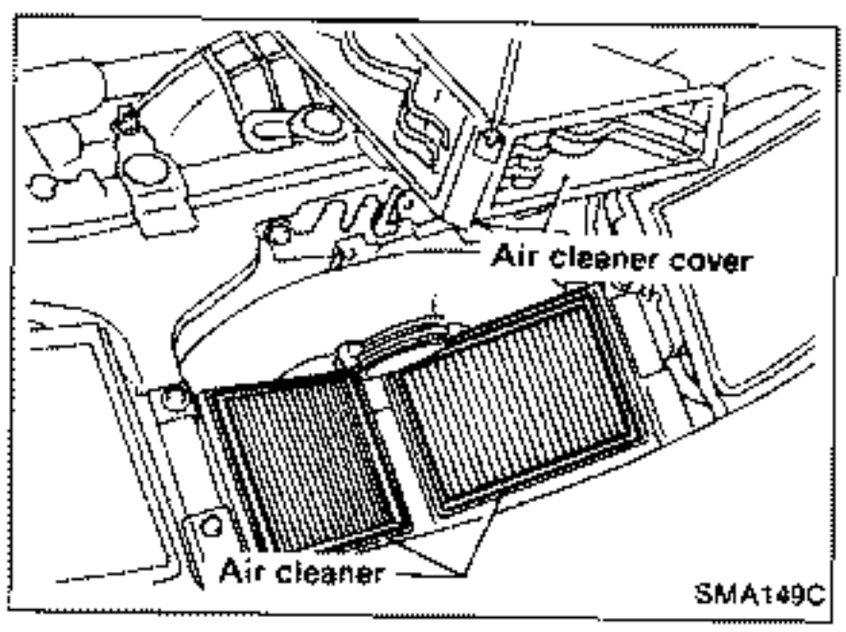

SMA149C

Changing Air Cleaner Filter

The viscous paper type filter does not need cleaning between renewals.

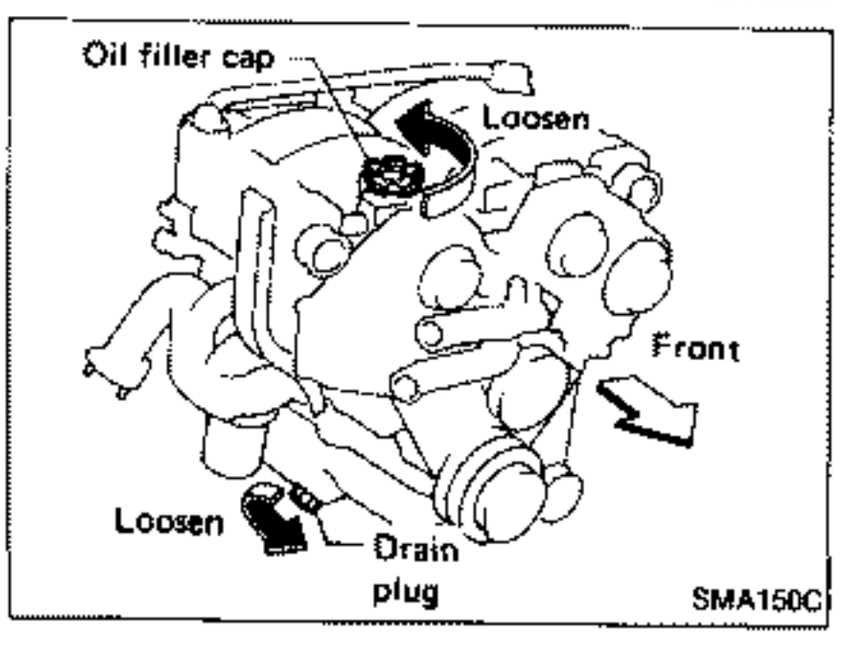

SMA150C

Changing Engine Oil

WARNING:

Be careful not to burn yourself, as the engine oil is hot.

1. Warm up engine, and check for oil leakage from engine components.
2. Remove drain plug and oil filler cap.

Changing Engine Oil (Cont'd)

3. Drain oil and refill with new engine oil.

Oil capacity (Refill): ℓ (Imp qt)

Non-Turbo

With oil filter

3.4 (3)

Without oil filter

3.0 (2-5/8)

Turbo (Without oil cooler)

With oil filter

3.4 (3)

Without oil filter

3.0 (2-5/8)

CAUTION:

- **Be sure to clean drain plug and install with new washer.**
  Oil pan drain plug:
  : 29 - 39 N·m
  (3.0 - 4.0 kg-m, 22 - 29 ft-lb)
- **Use recommended engine oil "API SG".**
- **Since the oil refill capacity changes depending on the oil temperature and drain time (more than 2 minutes is recommended), use these values as a reference and be certain to check with the dipstick when changing the oil.**

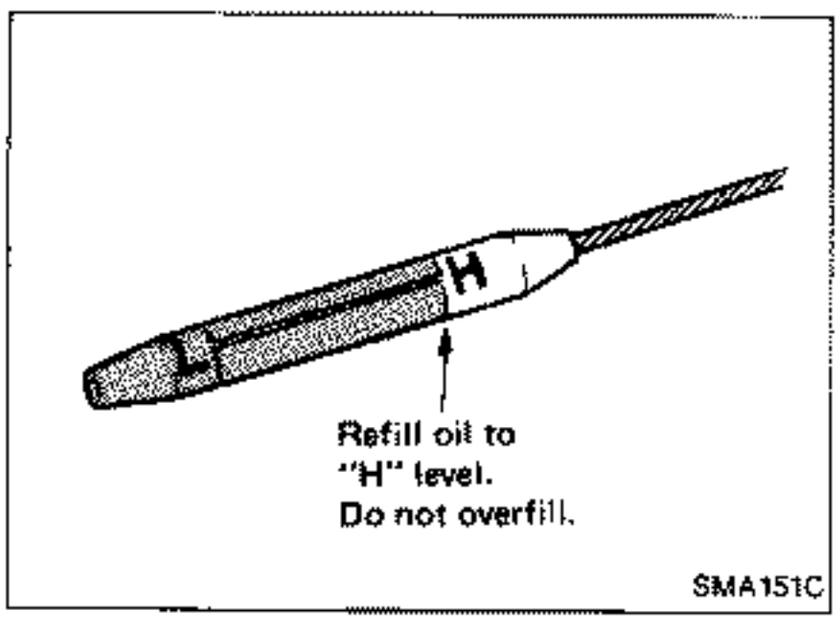

4. Check oil level.
5. Start engine and check area around drain plug and oil filter for oil leakage.
6. Run engine for a few minutes, then turn it off. After several minutes, confirm oil level again.

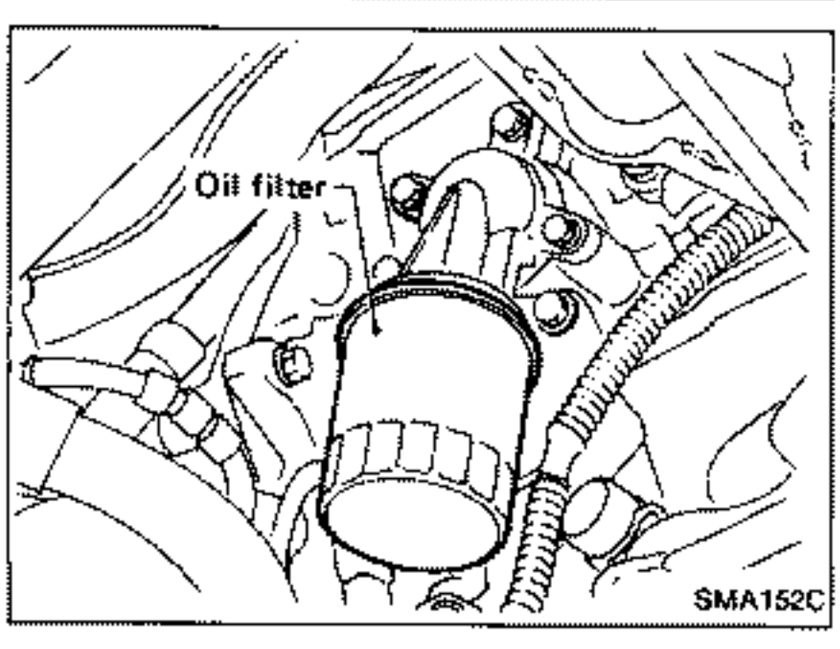

Changing Oil Filter

1. Remove oil filter with a suitable tool.

WARNING:

Be careful not to burn yourself, as the engine and engine oil are hot.

Changing Oil Filter (Cont'd)

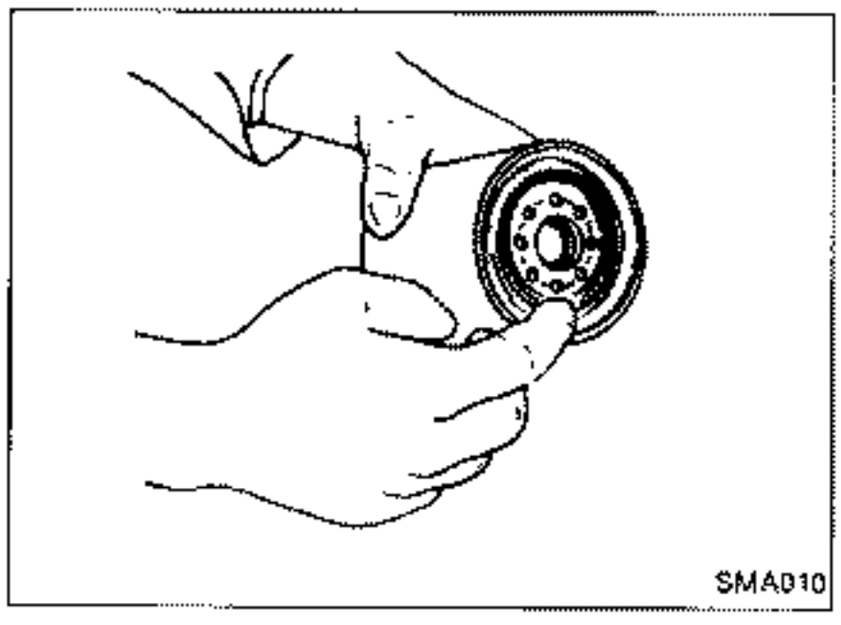
SMA010

2. Before installing a new oil filter, clean the oil filter mounting surface on cylinder block, and coat the oil filter rubber seal with a little engine oil.

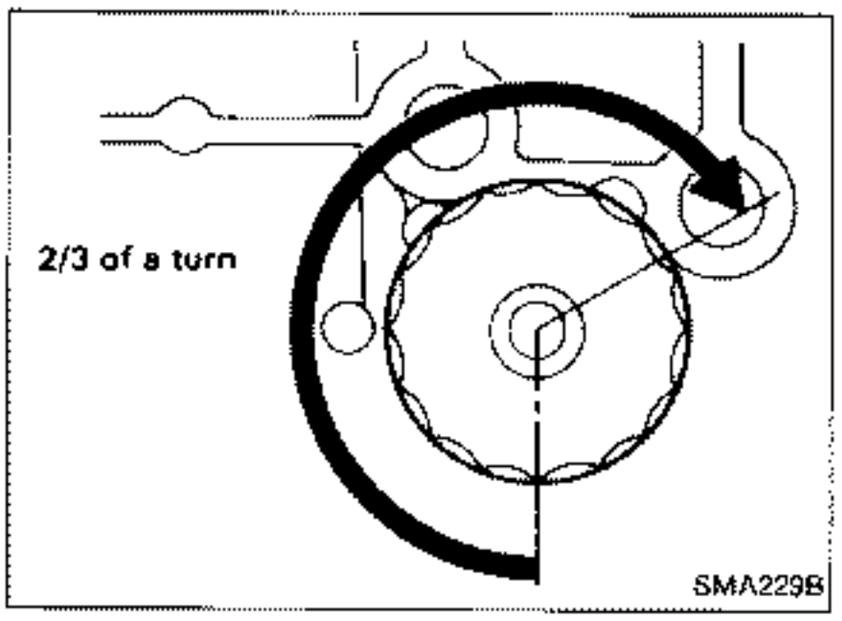

SMA229B

3. Screw in the oil filter until a slight resistance is felt, then tighten an additional 2/3 turn.
4. Add engine oil.

Refer to Changing Engine Oil.

Changing Spark Plugs

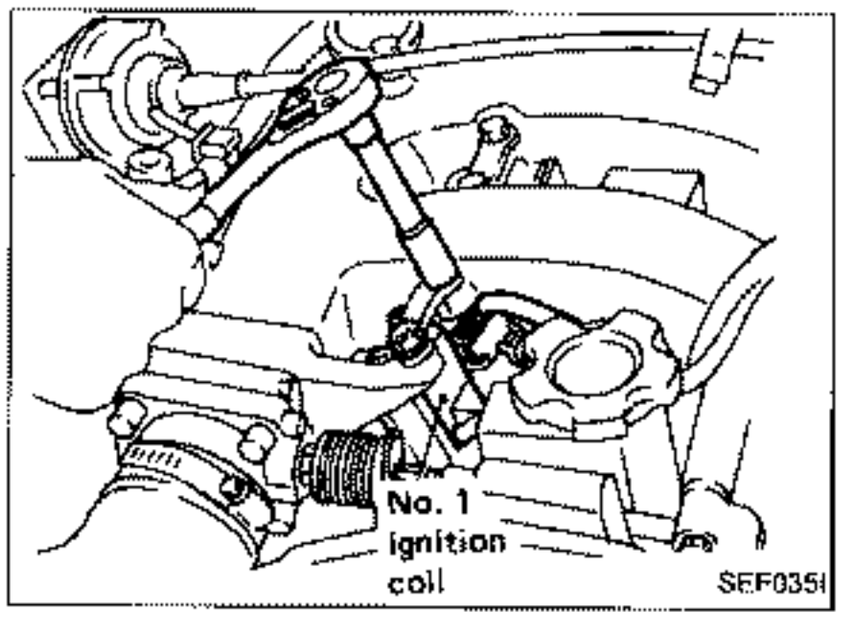

SEF035I

1. Disconnect ignition coil harness connector.
2. Loosen ignition coil fixing bolts and pull out coil from intake manifold collector.

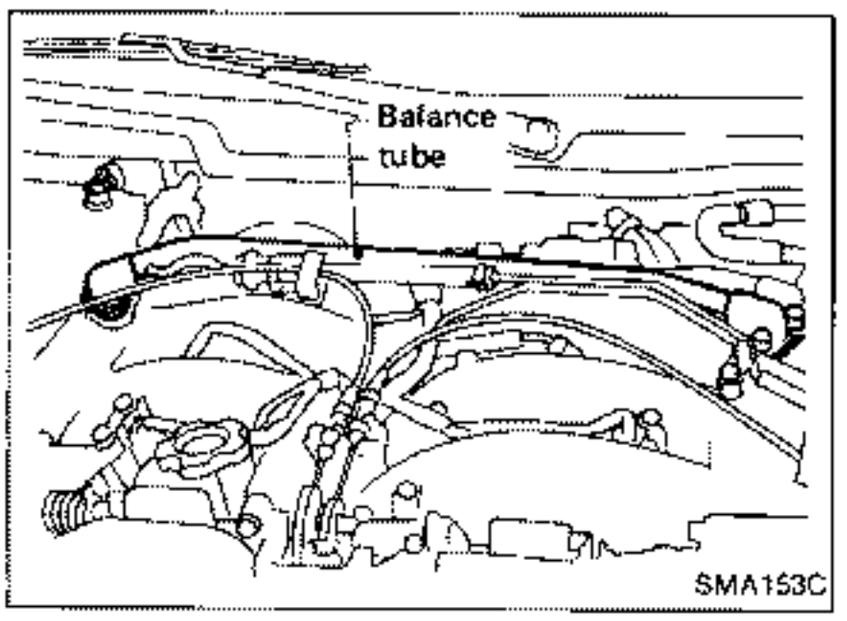

SMA153C

- When changing No. 5 and No. 6 cylinder spark plugs, remove balance tube first. (O-rings of balance tube may be reused, if they are not worn.)

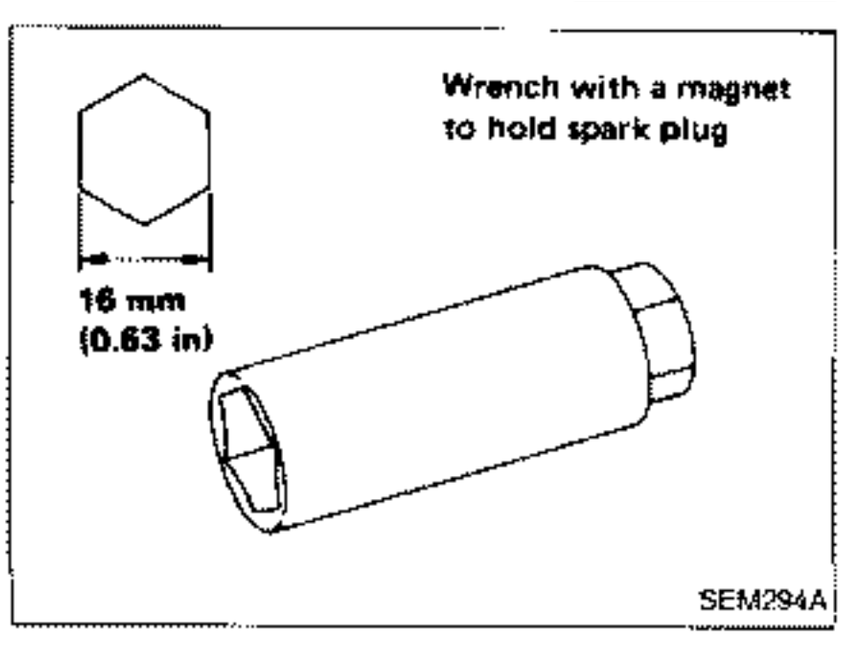

SEM294A

3. Remove spark plugs with suitable spark plug wrench.

Spark plug (Platinum-tipped type):

	Non-turbo	Turbo
Standard type	PFR6B-11	PFR6B-11C
Hot type	PFR5B-11	PFR5B-11C
Cold type	PFR7B-11	PFR7B-11C

: 20 - 29 N·m (2 - 3 kg-m, 14 - 22 ft-lb)

Changing Spark Plugs (Cont'd)

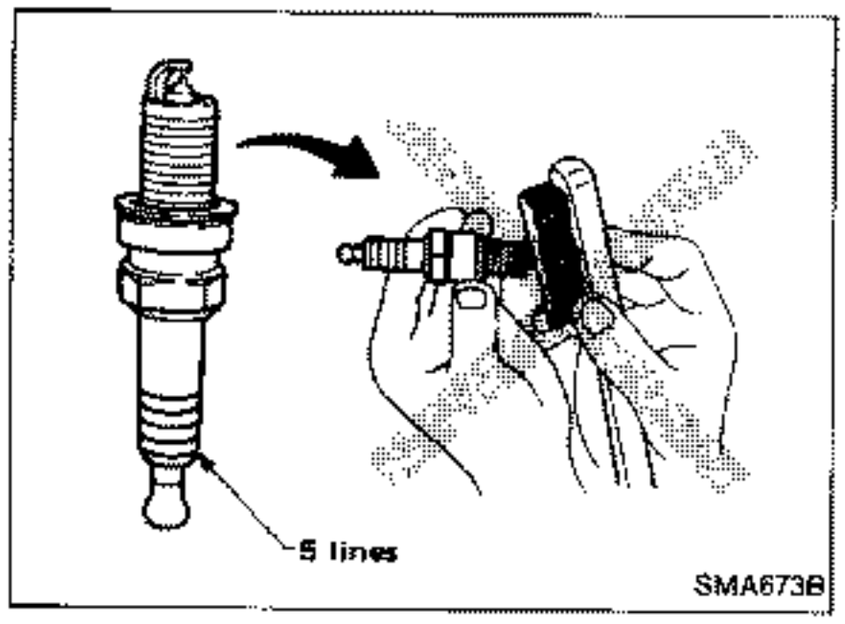

- **Checking and adjusting plug gap are not required between renewals.**
- **Do not use a wire brush for cleaning.**
- **If plug tip is covered with carbon, spark plug cleaner may be used.**

  Cleaner air pressure:

  Less than 588 kPa (5.9 bar, 6 kg/cm^2, 85 psi)

  Cleaning time:

  Less than 20 seconds

Checking Vapor Lines

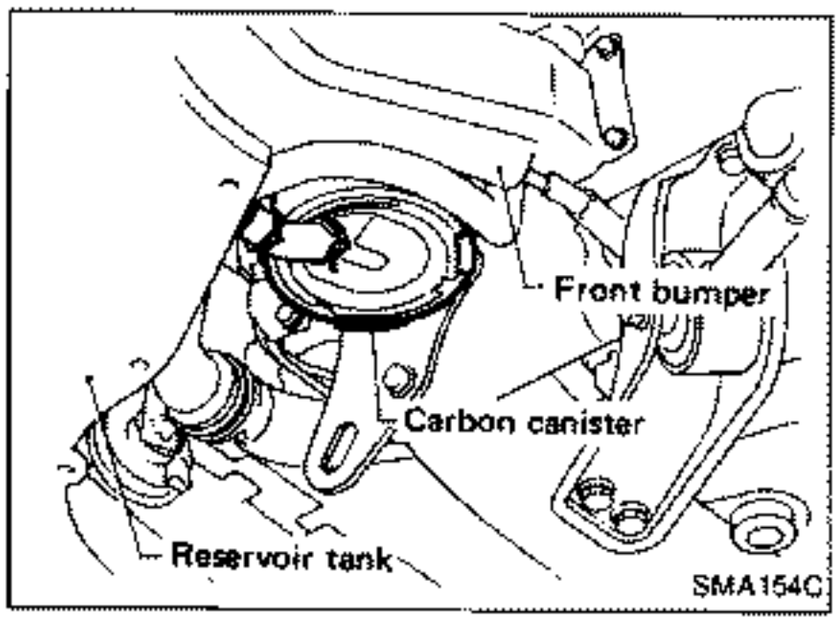

1. Visually inspect vapor lines for improper attachment and for cracks, damage, loose connections, chafing and deterioration.
2. Inspect vacuum relief valve of fuel tank filler cap for clogging, sticking, etc.

Refer to "EVAPORATIVE EMISSION CONTROL SYSTEM" in EF & EC section.

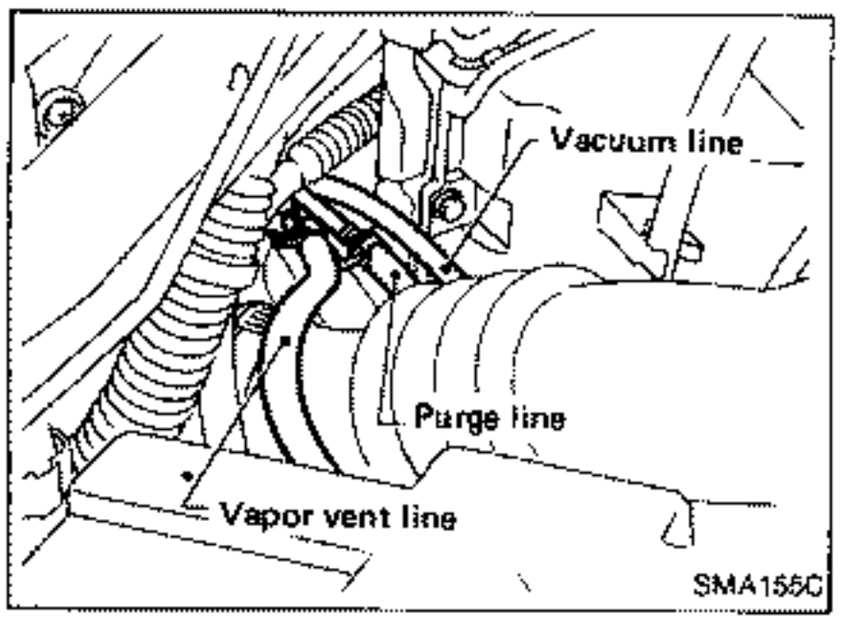

Checking Exhaust Gas Sensor

Checking procedure

- The check engine light normally blinks 5 times at 0.4 second intervals and 5 times at 0.2 second intervals.
  (No malfunction in Self-diagnostic results mode)
  Refer to Self-diagnosis in EF & EC section.

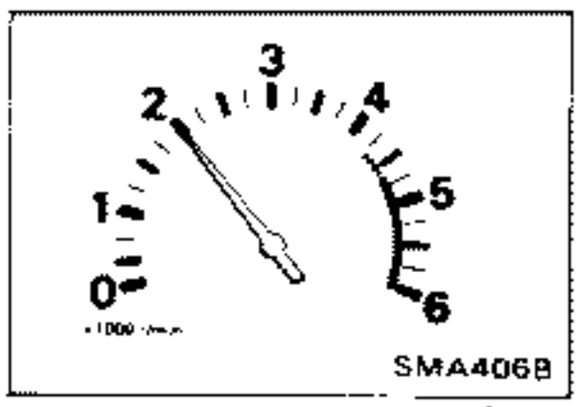

- The light normally indicates left side exhaust gas sensor operation.
- The check engine light blinks twice, then indicates right side exhaust gas sensor operation.
  Refer to Self-diagnosis in EF & EC section.

R.H.D. models

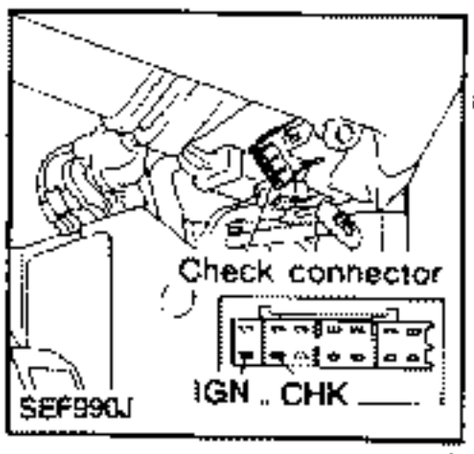

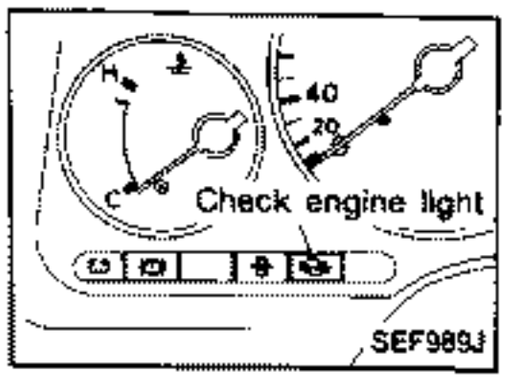

INSPECTION START

Turn ignition switch to "ON".

Switch to Mode II.
* Connect "CHK" and "IGN" terminals with a suitable harness for more than 2 seconds; the mode will change to the self-diagnosis mode.

Start engine and warm it up until water temperature indicator points to the middle of the gauge.

Run engine at about 2,000 rpm for about 2 minutes under no-load.

Make sure that the check engine light goes on and off at 2,000 rpm under no-load. — N.G.

O.K.

Return to idle speed and switch to monitor right side exhaust gas sensor operation.
* Connect "CHK" and "IGN" terminals with a suitable harness for more than 2 seconds.

Make sure that the check engine light goes on and off at 2,000 rpm under no-load. — N.G.

O.K.

INSPECTION END.

Check and adjustment should be made by referring to TROUBLE DIAGNOSES-EXHAUST GAS SENSOR and IDLE SPEED/IGNITION TIMING/IDLE MIXTURE RATIO INSPECTION in EF & EC section.

L.H.D. models

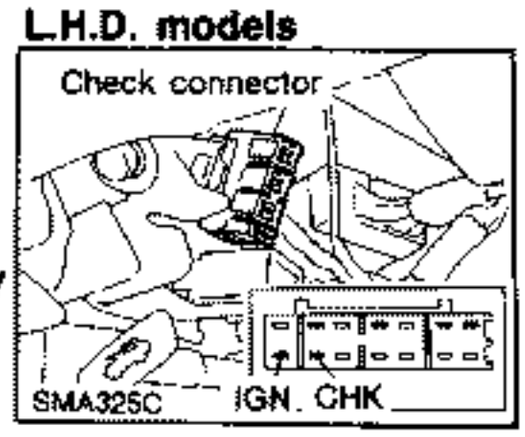

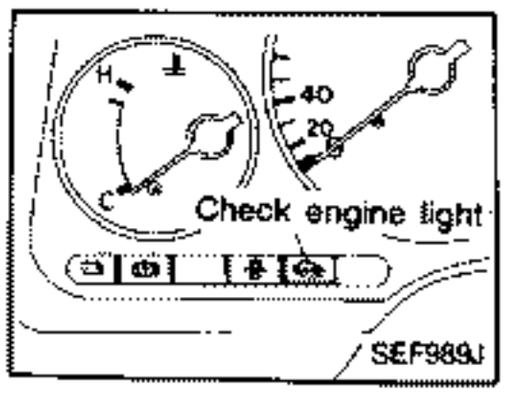

- **For help in the checking procedure, refor to Self-diagnosis in EF & EC section.**

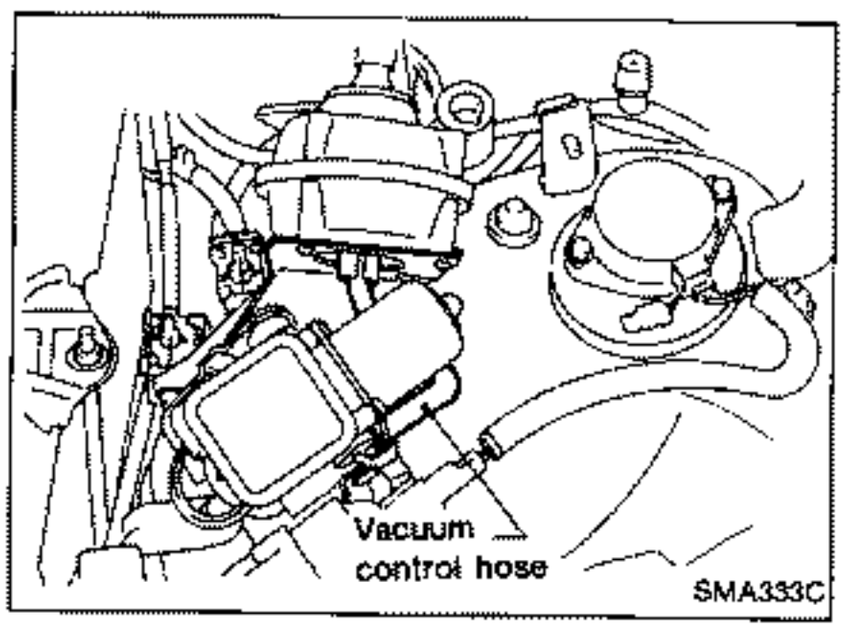

Checking A.S.C.D. Vacuum Line

Check vacuum control hose and connections for airtightness, improper attachment, breakage, chafing, cracks, clogging, deformation and deterioration.
If necessary, replace A.S.C.D. actuator assembly.

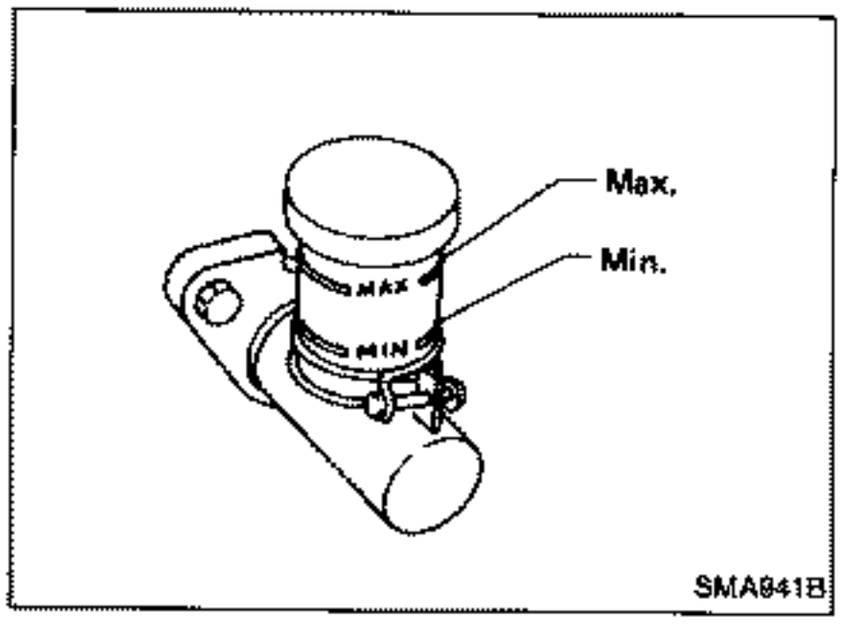

Checking Clutch Fluid Level and Leaks

If fluid level is extremely low, check clutch system for leaks.

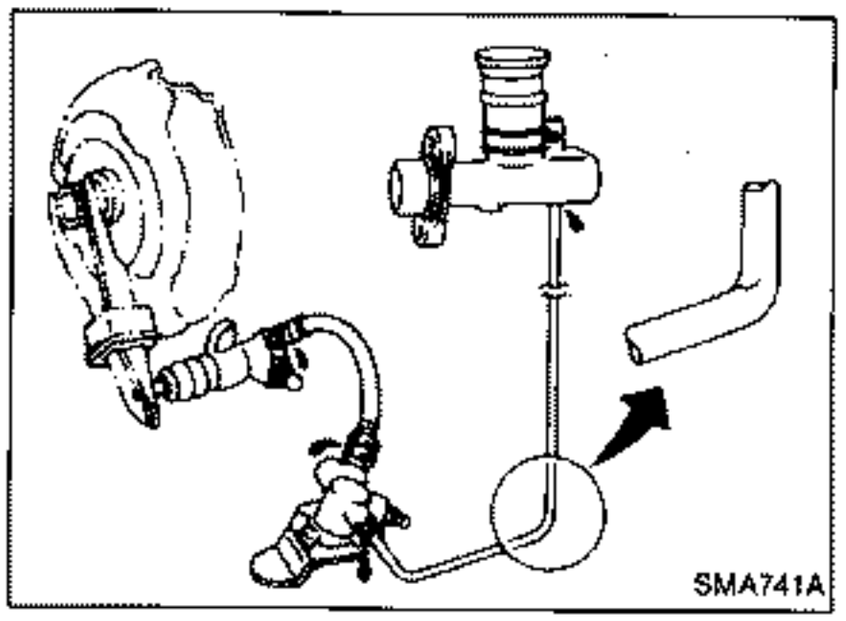

Checking Clutch System

HYDRAULIC TYPE

Check fluid lines and operating cylinder for improper attachment, cracks, damage, loose connections, chafing and deterioration.

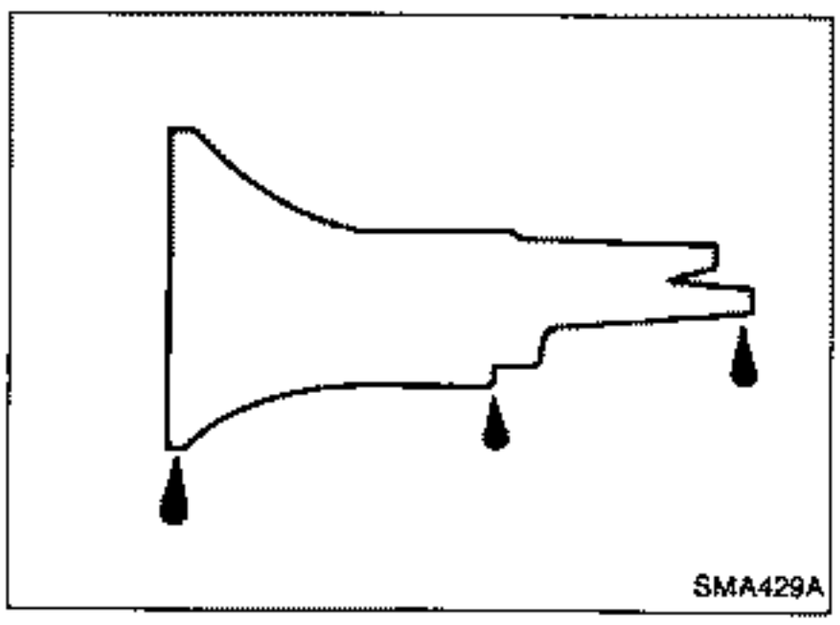

Checking M/T Oil

1. Check for oil leakage.

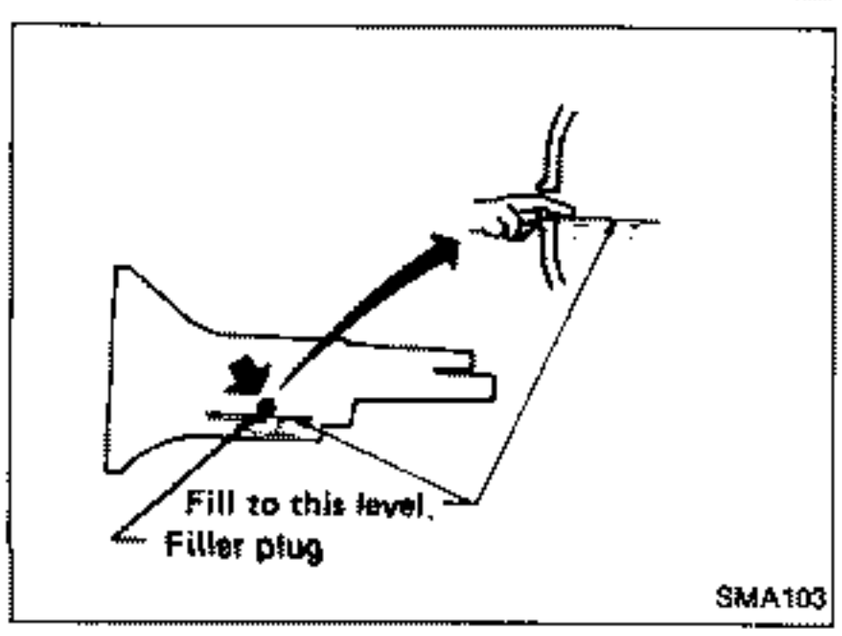

2. If leakage is found, check oil level.

Never start engine while checking oil level.

Filler plug:

: 25 - 34 N·m (2.5 - 3.5 kg-m, 18 - 25 ft-lb)

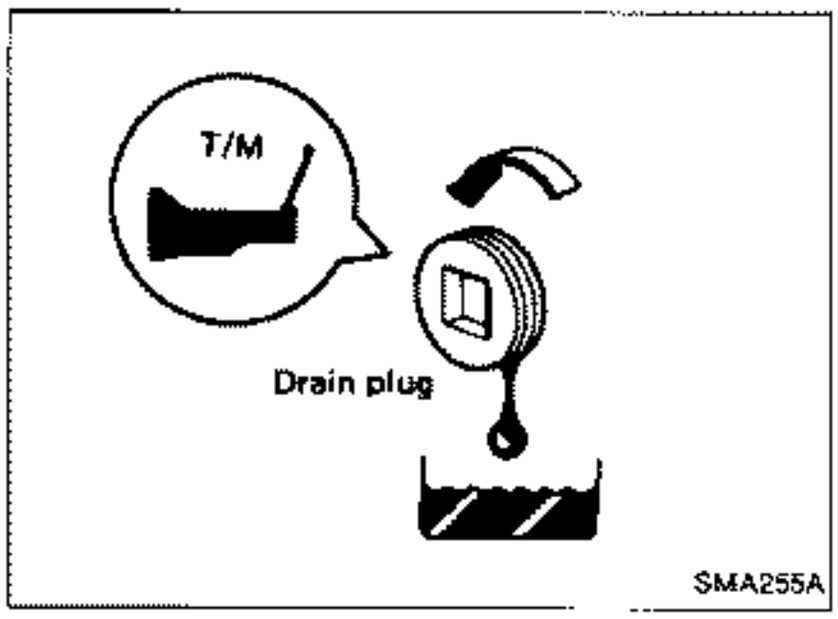

Changing M/T Oil

1. Drain oil.

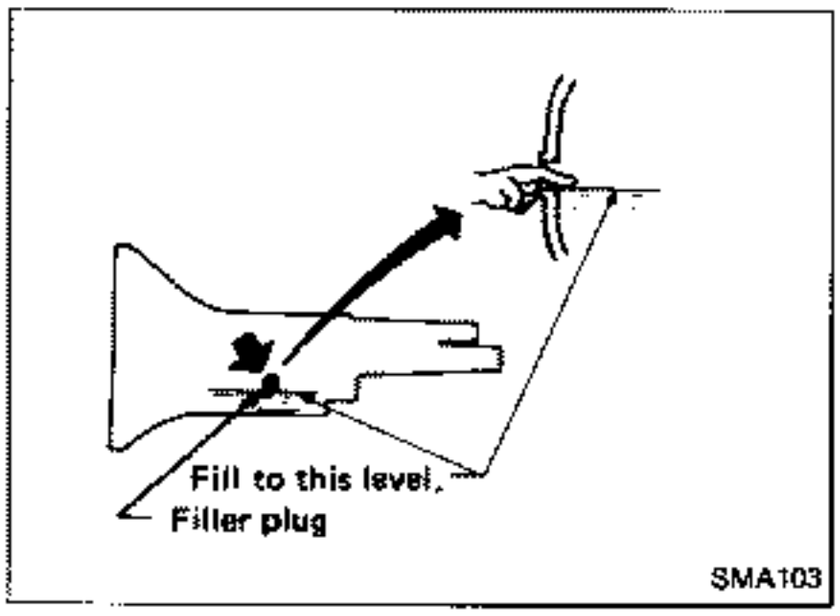

2. Refill with recommended new gear oil and check oil level.

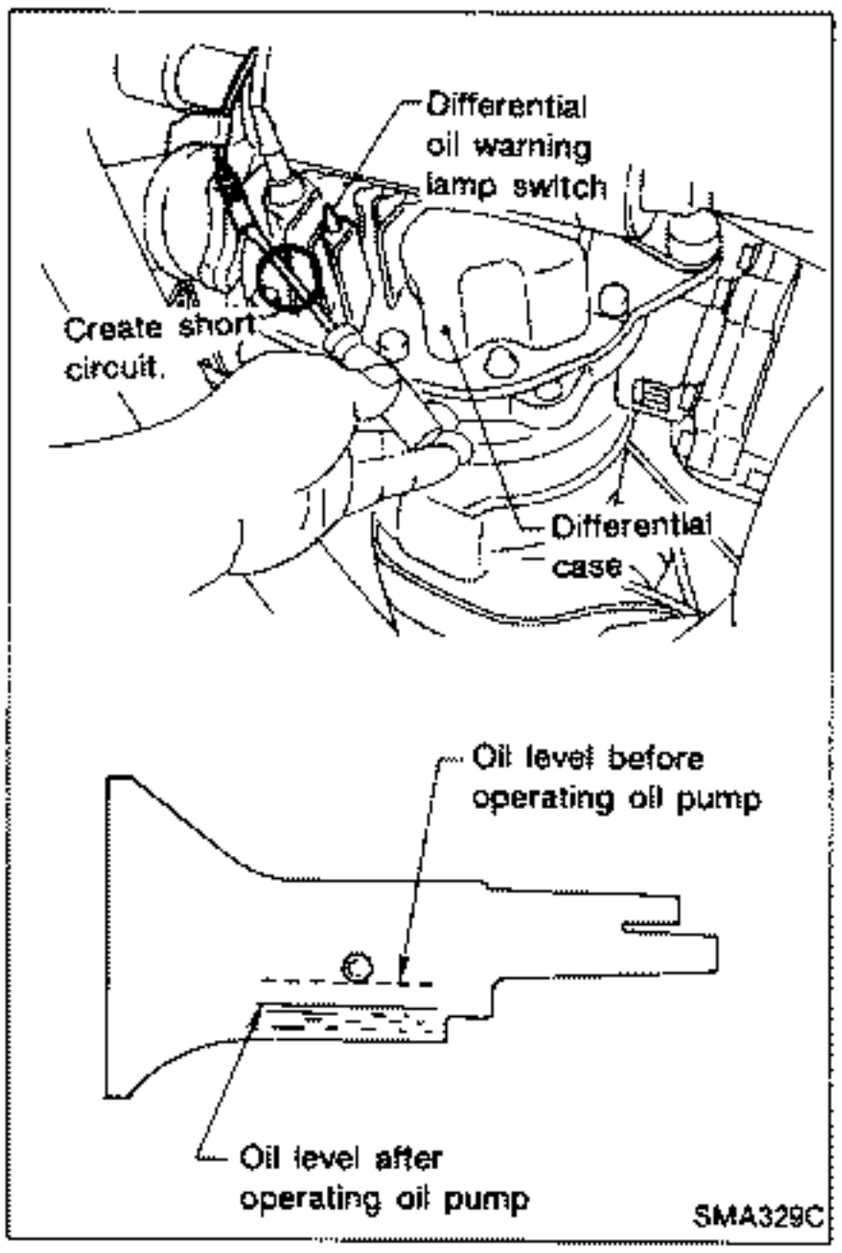

For turbo models

3. Turn ignition switch ON and short the circuit between the terminals for differential oil warning lamp switch on differential case.

Keep oil pump operating for 1 minute to circulate oil in transmission oil cooler system. (Oil pump for differential oil cooling system operates at the same time.)

4. Top up with recommended new gear oil.
5. Check oil level.

Oil capacity:

For turbo

3.1 ℓ (5-1/2 Imp pt)

For non-turbo

2.8 ℓ (4-7/8 Imp pt)

Filler and drain plugs:

(🔧): 25 - 34 N·m (2.5 - 3.5 kg-m, 18 - 25 ft-lb)

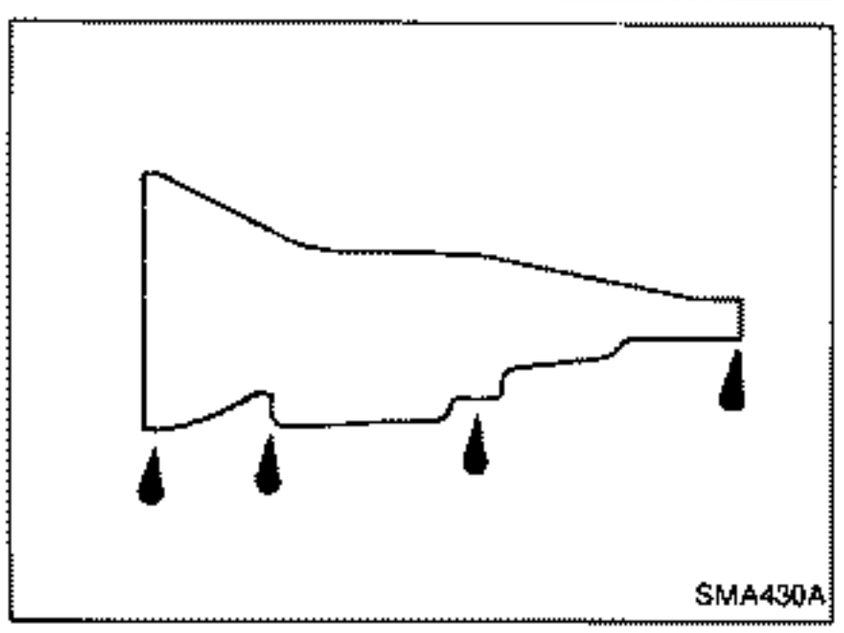

Checking A/T Fluid

1. Check for fluid leakage.

Checking A/T Fluid (Cont'd)

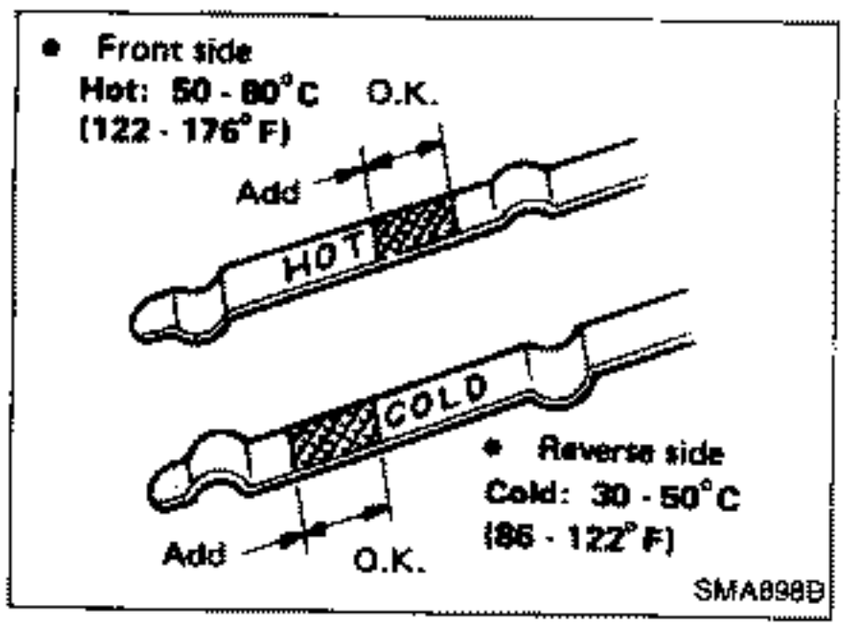

2. If leakage is found, check fluid level.
   Fluid level should be checked using "HOT" range on dipstick at fluid temperatures of 50 to 80°C (122 to 176°F) after vehicle has been driven approximately 5 minutes in urban areas after engine is warmed up. But it can be checked at fluid temperatures of 30 to 50°C (86 to 122°F) using "COLD" range on dipstick for reference after engine is warmed up and before driving. However, fluid level must be rechecked using "HOT" range.
   1) Park vehicle on level surface and set parking brake.
   2) Start engine and then move selector lever through each gear range, ending in "P".
   3) Check fluid level with engine idling.
   4) Remove dipstick and wipe it clean with lint-free paper.
   5) Reinsert dipstick into charging pipe as far as it will go.
   6) Remove dipstick and note reading. If level is at low side of either range, add fluid to the charging pipe.

Do not overfill.

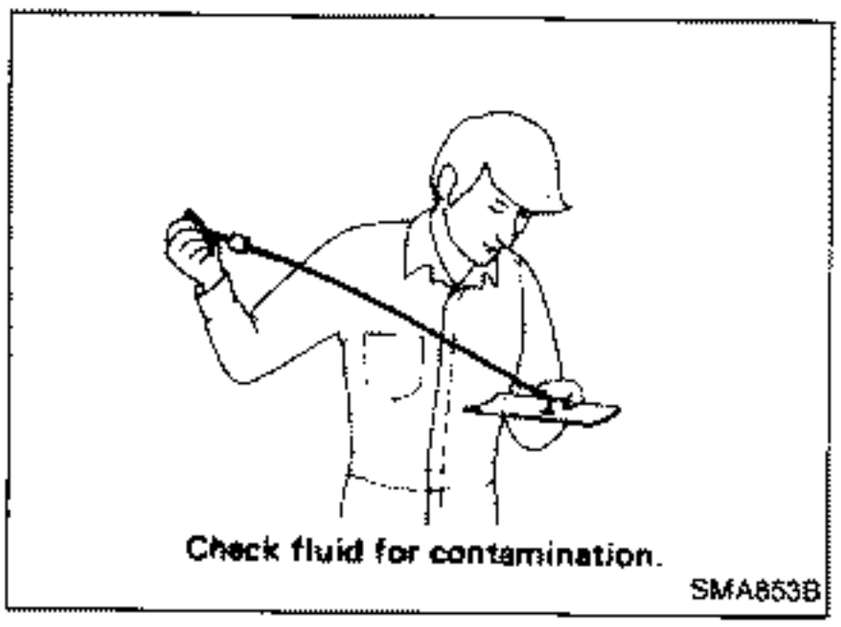
Check fluid for contamination.
SMA853B

3. Check fluid condition.
   Check fluid for contamination. If fluid is very dark or smells burned, or contains frictional material (clutches, band, etc.), check operation of A/T.
   Refer to section AT for checking operation of A/T.

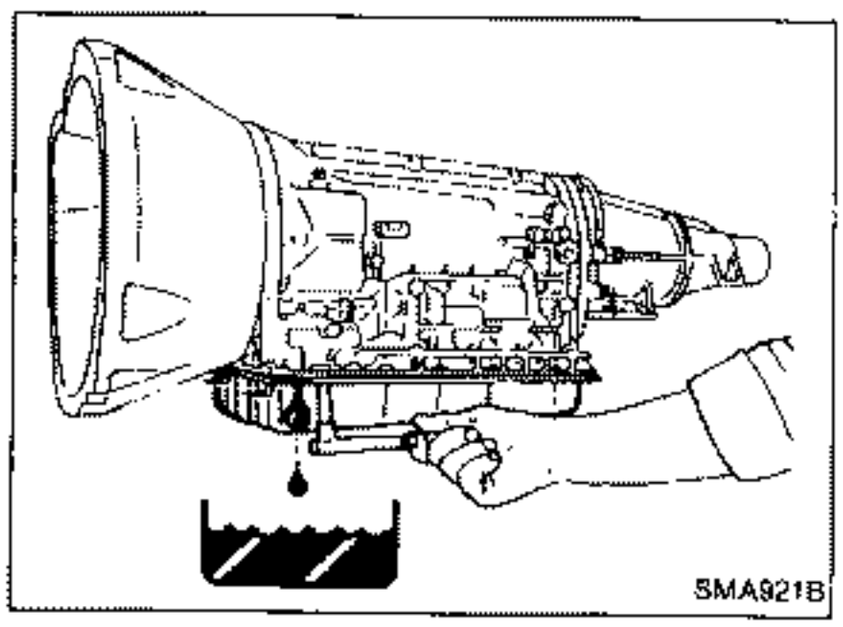
SMA921B

Changing A/T Fluid

1. Drain fluid by removing oil pan.
2. Replace gasket with a new one.
3. Refill with recommended A/T fluid and then check fluid level.

Oil capacity (With torque converter):

VG30DE

8.3 ℓ (7-1/4 Imp qt)

VG30DETT

8.7 ℓ (7-5/8 Imp qt)

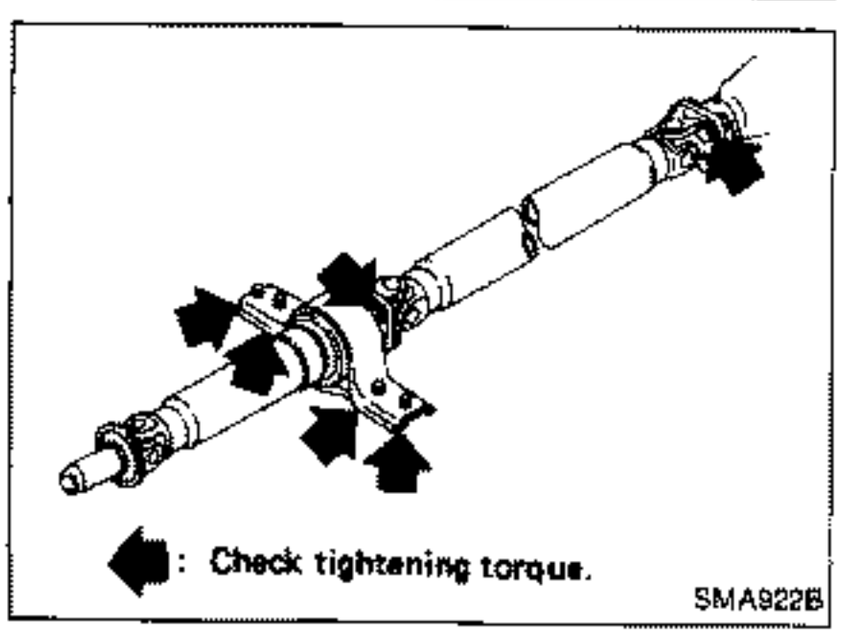
: Check tightening torque.
SMA922B

Checking Propeller Shaft

Check propeller shaft and center bearing for damage, looseness or grease leakage.
If greasing points are provided, supply grease as necessary.
Refer to section PD.

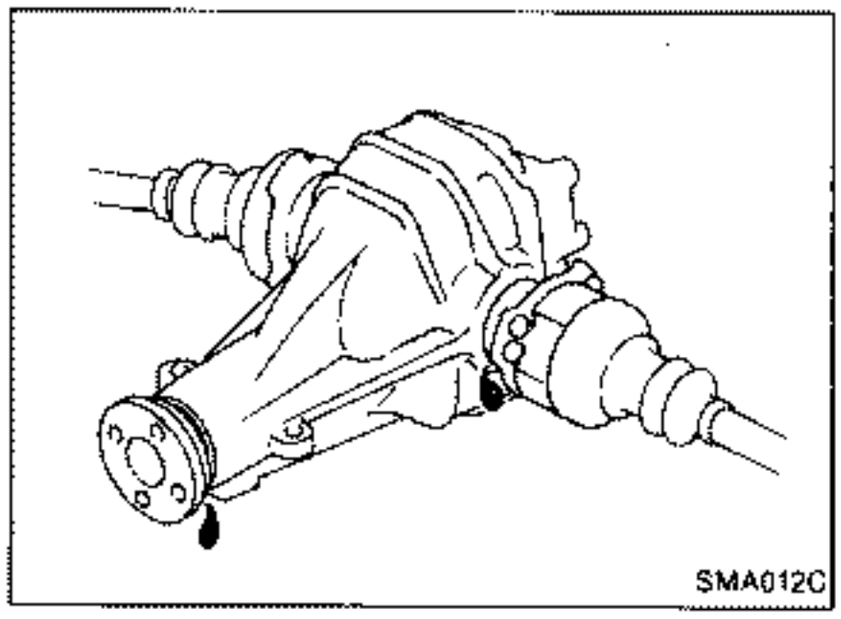
SMA012C

Checking Differential Gear Oil

1. Check differential carrier for oil leakage.
2. If leakage is found, check oil level.
   Filler plug:
   : 39 - 59 N·m (4 - 6 kg-m, 29 - 43 ft-lb)

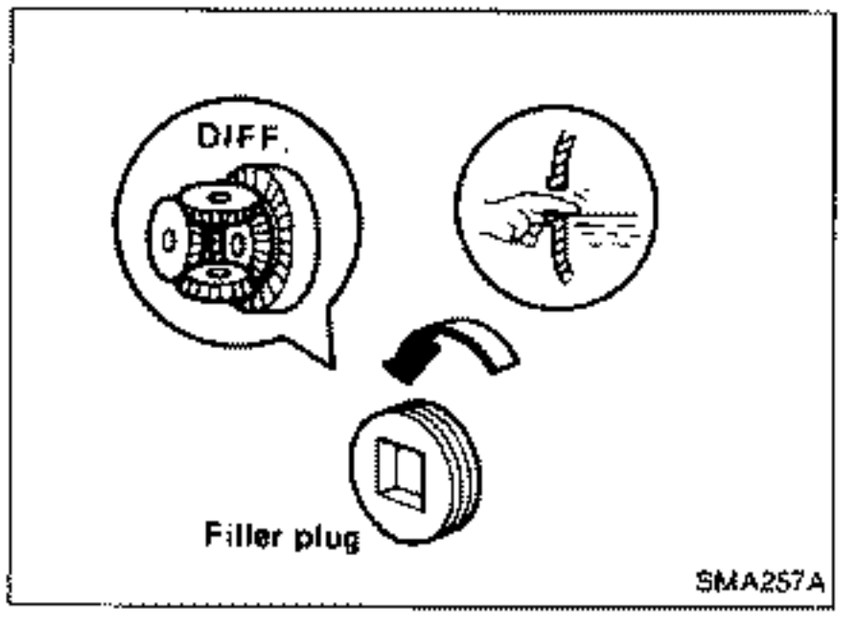

SMA257A

Changing Differential Gear Oil

1. Drain oil and refill with recommended new gear oil.
2. Check oil level.
   Oil capacity:
   For non-turbo
   1.5 ℓ (2-5/8 Imp pt)
   For turbo
   2.1 ℓ (3-3/4 Imp pt)
   Drain plug:
   : 39 - 59 N·m (4 - 6 kg-m, 29 - 43 ft-lb)

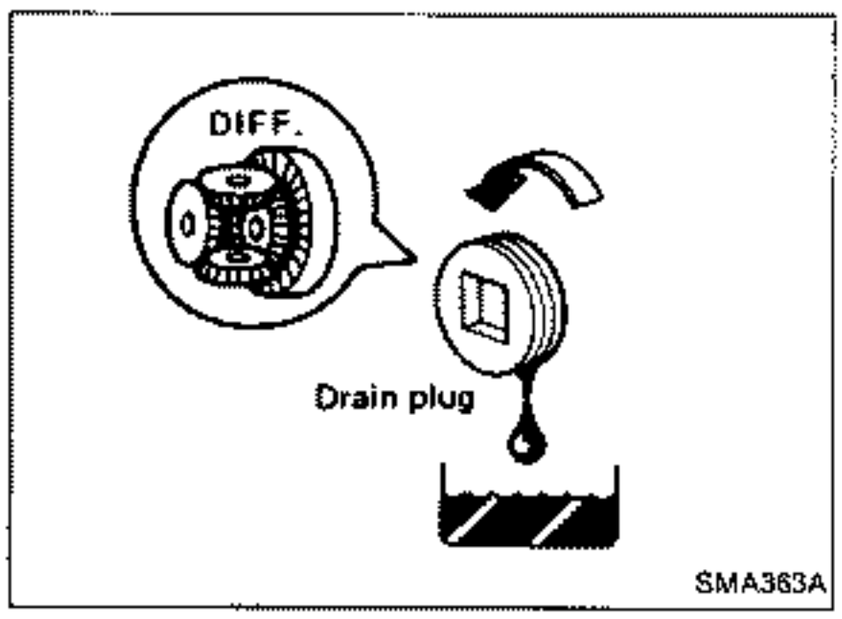

SMA363A

Checking Brake Fluid Level and Leaks

- If fluid level is extremely low, check brake system for leaks.

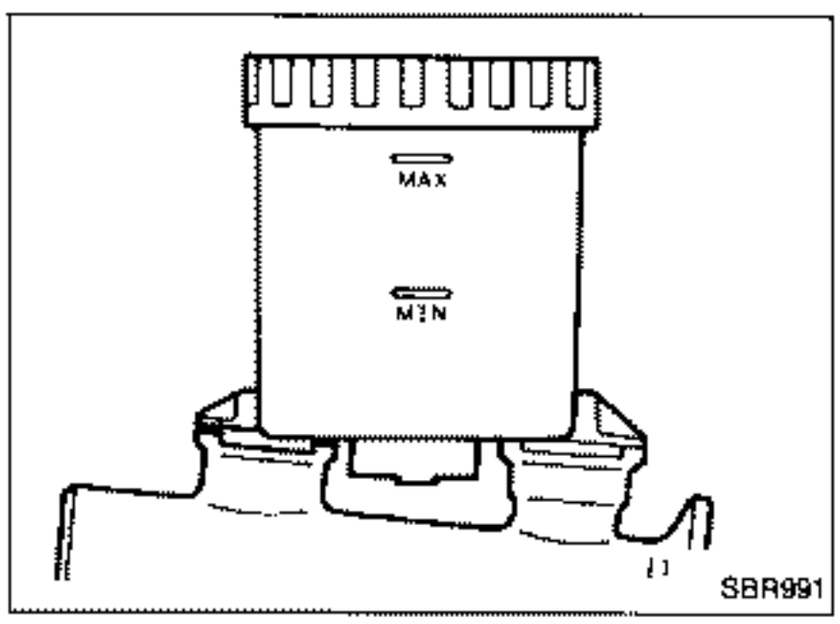

SBR991

Checking Brake Lines and Cables

- Check brake fluid lines and parking brake cables for improper attachment and for leaks, chafing, abrasions, deterioration, etc.

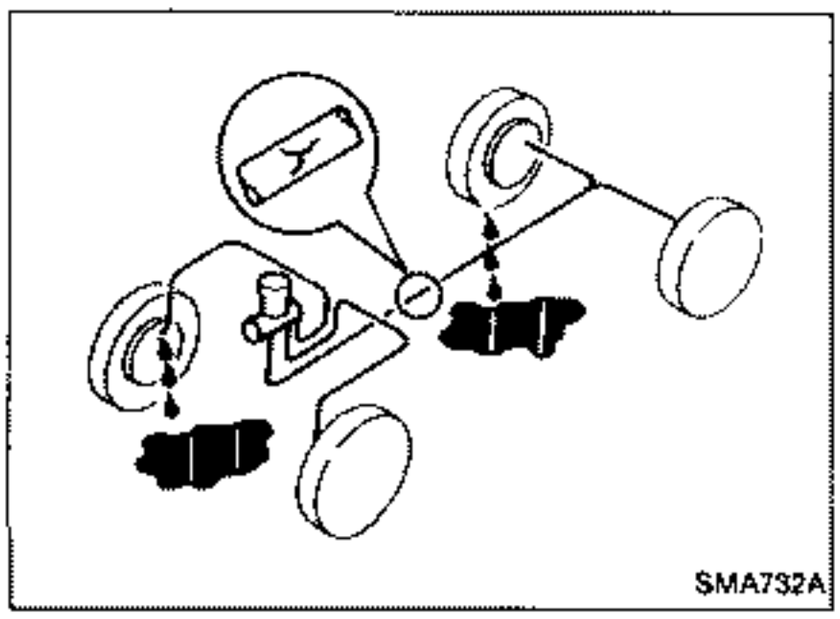
SMA732A

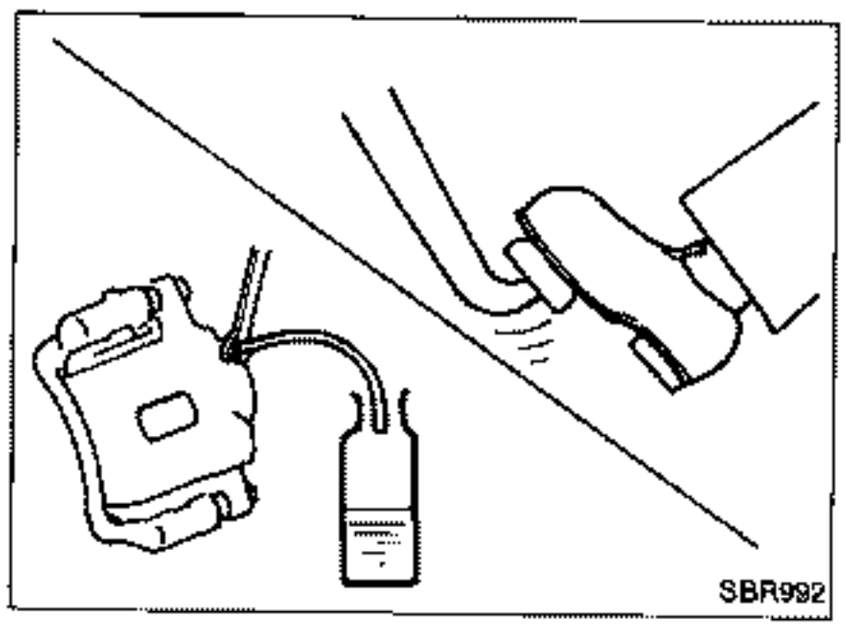

Changing Brake Fluid

1. Drain brake fluid from each air bleeder valve.
2. Refill until new brake fluid comes out from each air bleeder valve.
   Use same procedure as in bleeding hydraulic system to refill brake fluid.
   Refer to section BR.

- **Refill with recommended brake fluid "DOT 3".**
- **Never reuse drained brake fluid.**
- **Be careful not to splash brake fluid on painted areas.**

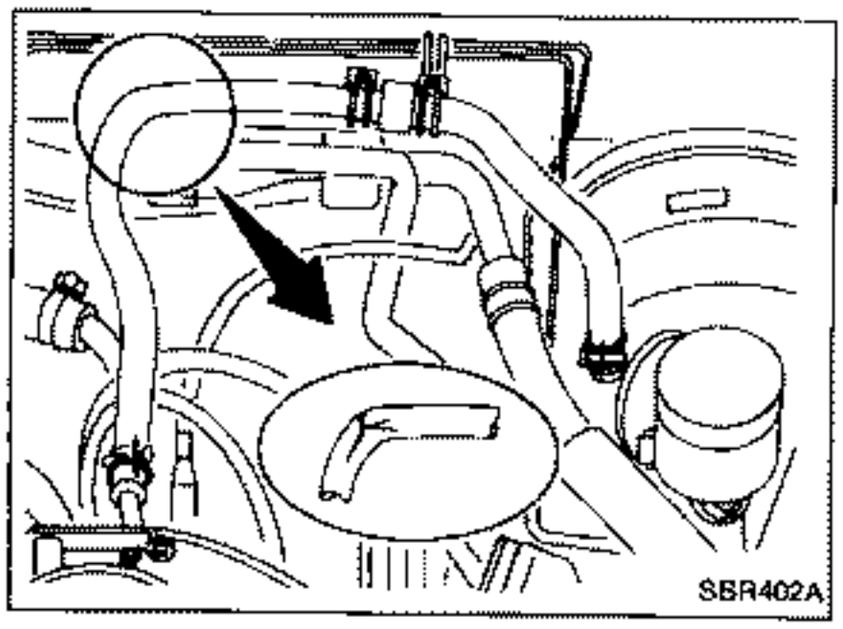

Checking Brake Booster Vacuum Hoses, Connections and Check Valve

Check vacuum lines, connections and check valve for improper attachment, air tightness, chafing and deterioration.

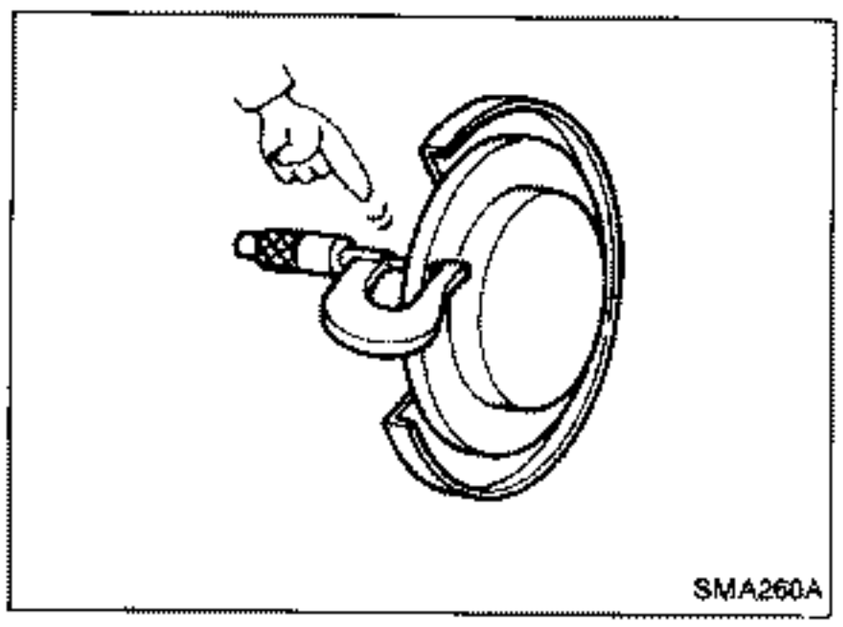

Checking Disc Brake

- Check condition of disc brake components.

ROTOR

- Check condition and thickness.

Unit: mm (in)

	Front		Rear
Disc brake type	OPZ25V	OPF25V	OPZ11VB
Standard thickness	26.0 (1.024)	30.0 (1.181)	18 (0.71)
Minimum thickness	24.0 (0.945)	28.0 (1.102)	16.0 (0.630)

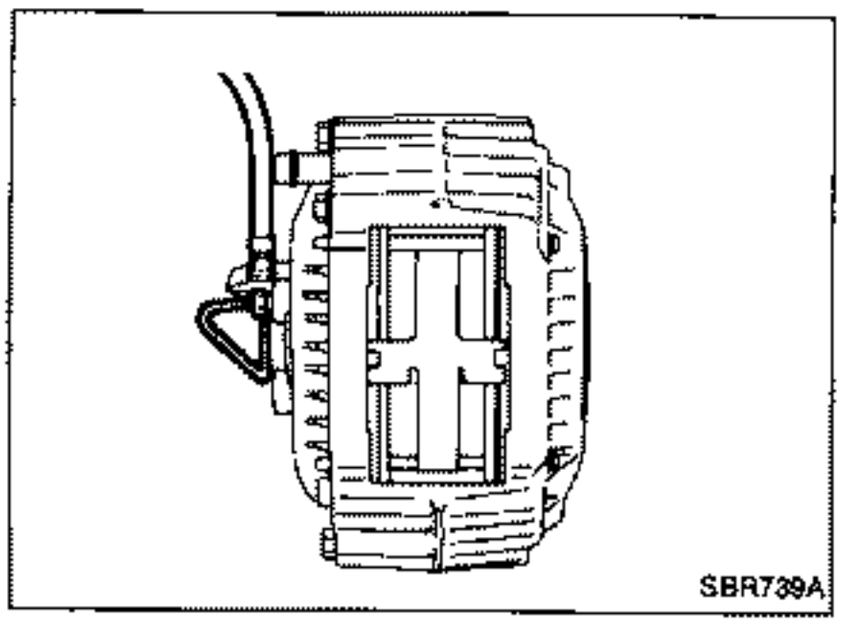

CALIPER

- Check operation and for leakage.

Checking Disc Brake (Cont'd)

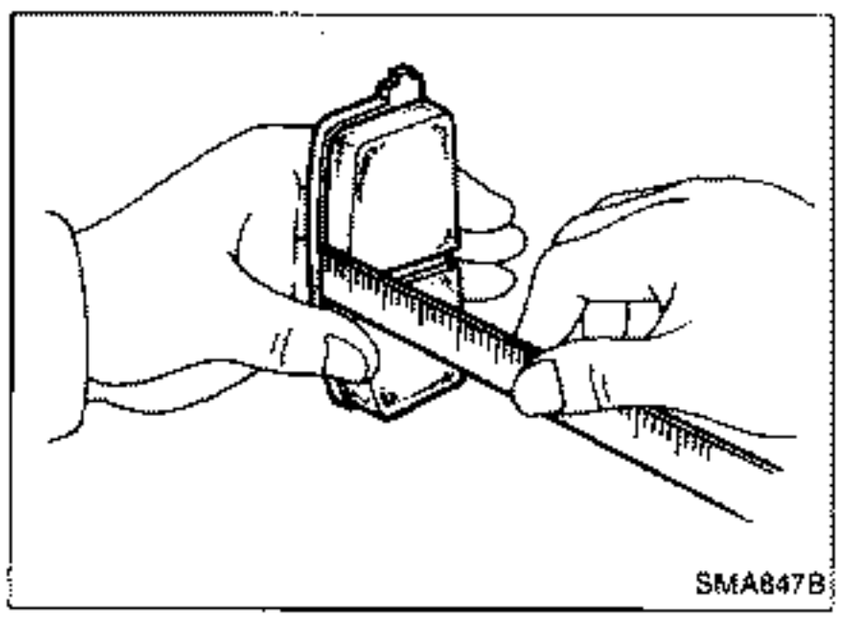
SMA847B

PAD

- Check for wear or damage.

Unit: mm (in)

	Front	Rear
Disc brake type	OPZ25V OPF25V	OPZ11VB
Standard thickness	10.0 (0.394)	11.5 (0.453)
Minimum thickness	2.0 (0.079)	

Balancing Wheels

- Adjust wheel balance using road wheel center.
  Wheel balance (Maximum allowable unbalance at rim flange):
  Refer to S.D.S.
  Tire balancing weight: Refer to S.D.S.

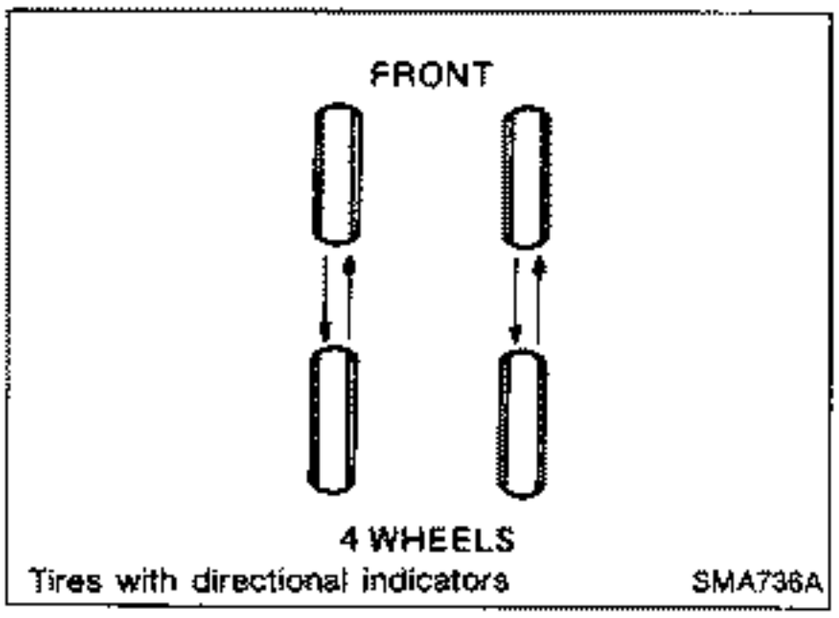

Tires with directional indicators SMA736A

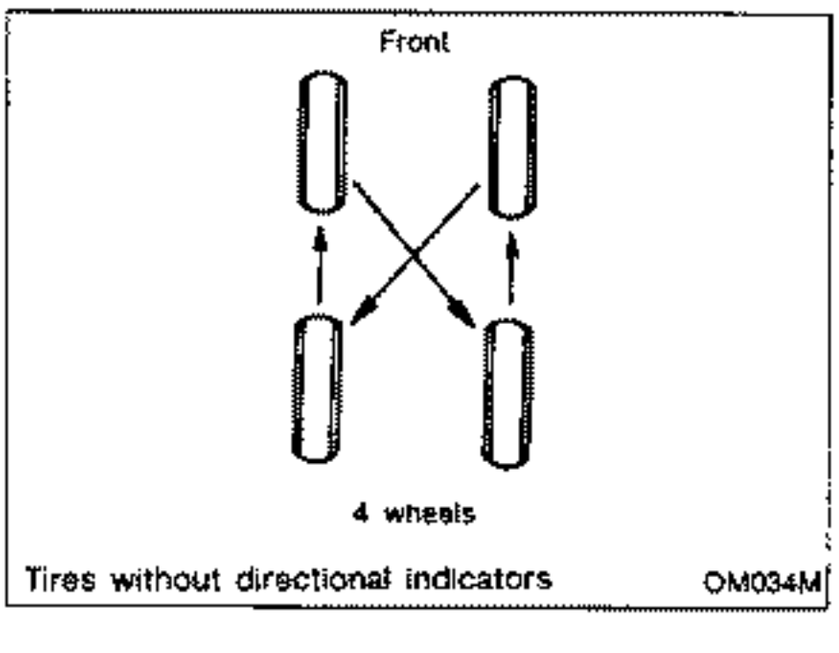

Tires without directional indicators OM034M

Tire Rotation

FOR NON-TURBO

- **Do not include the T-type or space saver spare tire when rotating the tires.**
  Wheel nuts:
  : 98 - 118 N·m
  (10.0 - 12.0 kg-m, 72 - 87 ft-lb)
- Tires marked with directional indicators can only be rotated between front and rear.

FOR TURBO

The front and rear tires cannot be rotated because they are different sizes.
The left and right side tires can be swapped only when the tires do not have directional indicators.

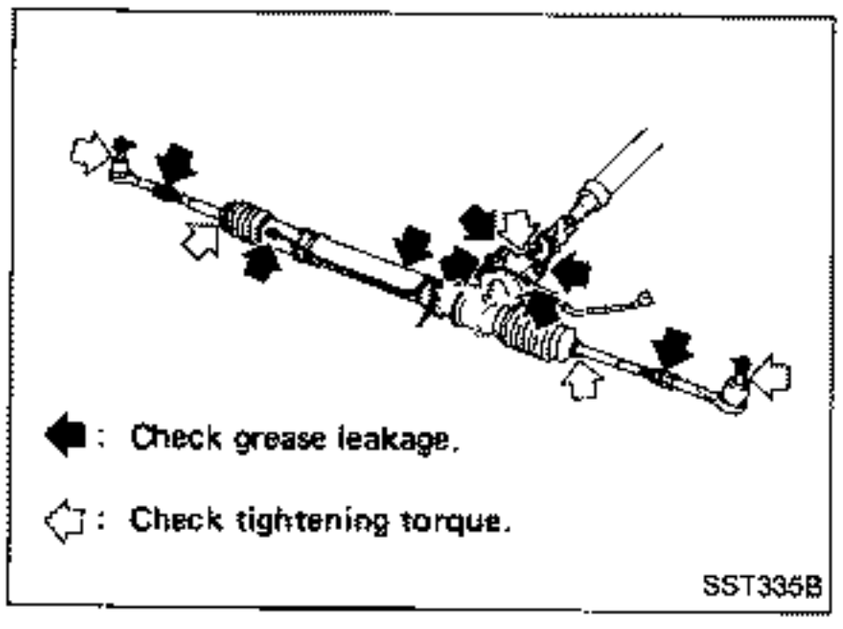

Checking Steering Gear and Linkage

STEERING GEAR

- Check gear housing and boots for looseness, damage or oil leakage.
- Check connection with steering column for looseness.

STEERING LINKAGE

- Check ball joint, dust cover and other component parts for looseness, wear, damage or grease leakage.

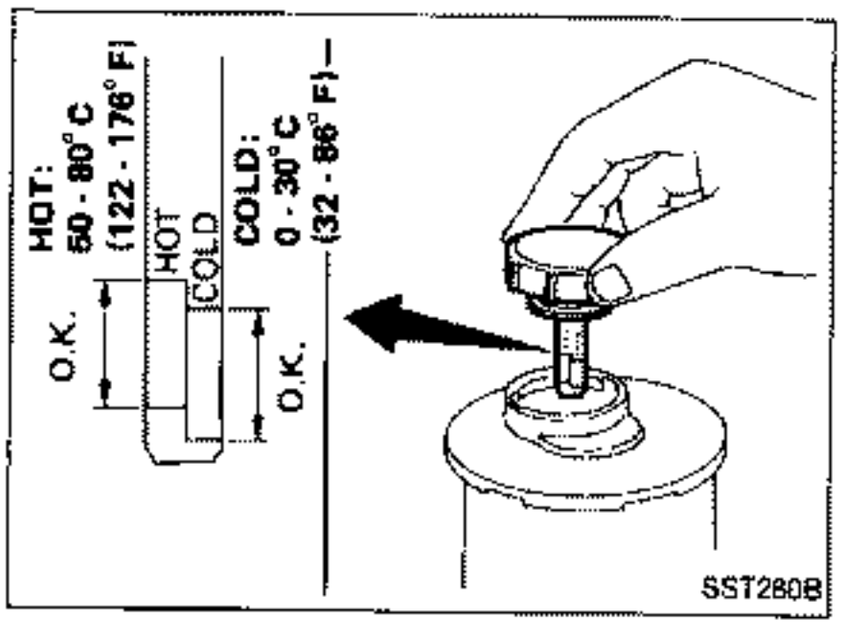

Checking Power Steering Fluid and Lines

- Checking fluid level (Without SUPER HICAS system)
  Fluid level should be checked using "HOT" range on dipstick at fluid temperatures of 50 to 80°C (122 to 176°F) or using "COLD" range on dipstick at fluid temperatures of 0 to 30°C (32 to 86°F).

CAUTION:
Do not overfill.

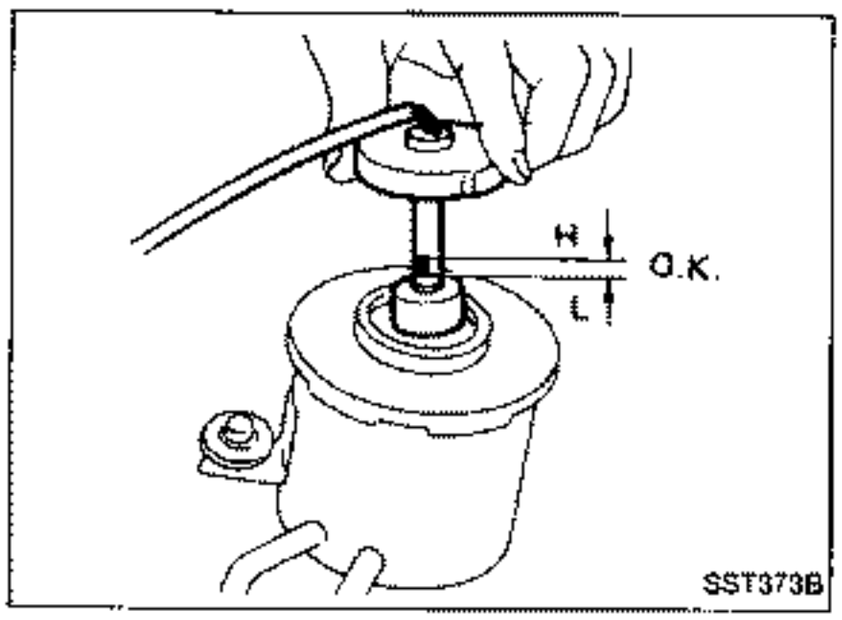

- Checking fluid level (With SUPER HICAS system)
  Maintain the fluid level so that the lower surface of the float is maintained between the "L" and "H" marks on the gauge rod. The fluid level should be checked when the engine is stopped and the fluid temperature is normal.

CAUTION:
Do not overfill.

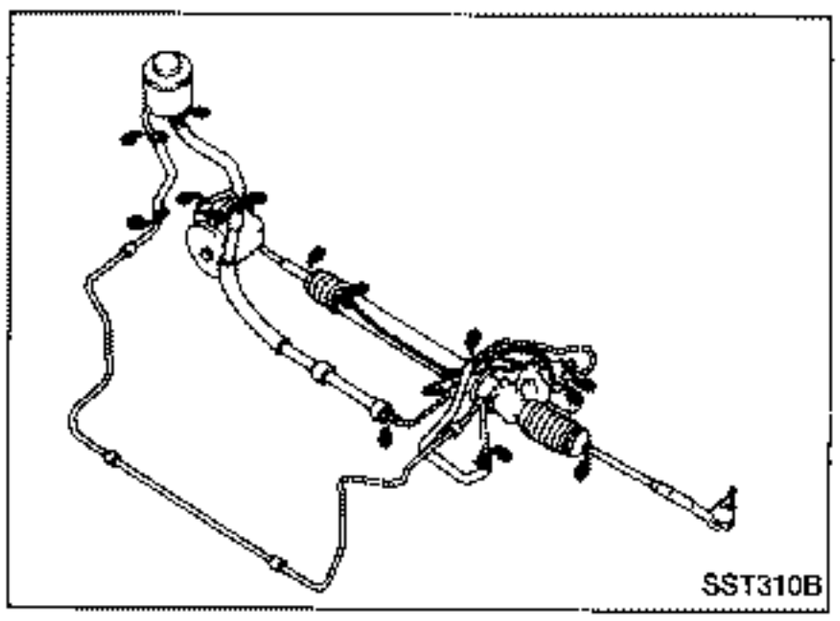

- Check lines for improper attachment, leaks, cracks, damage, loose connections, chafing and deterioration.

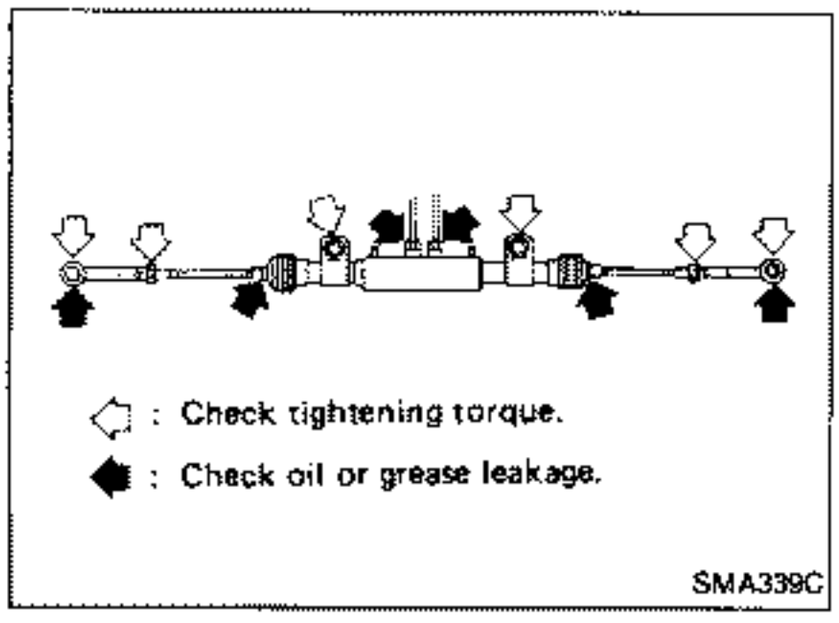

Checking Power Cylinder (With SUPER HICAS system)

- Check power cylinder and linkage for damage, looseness and leakage of oil or grease.

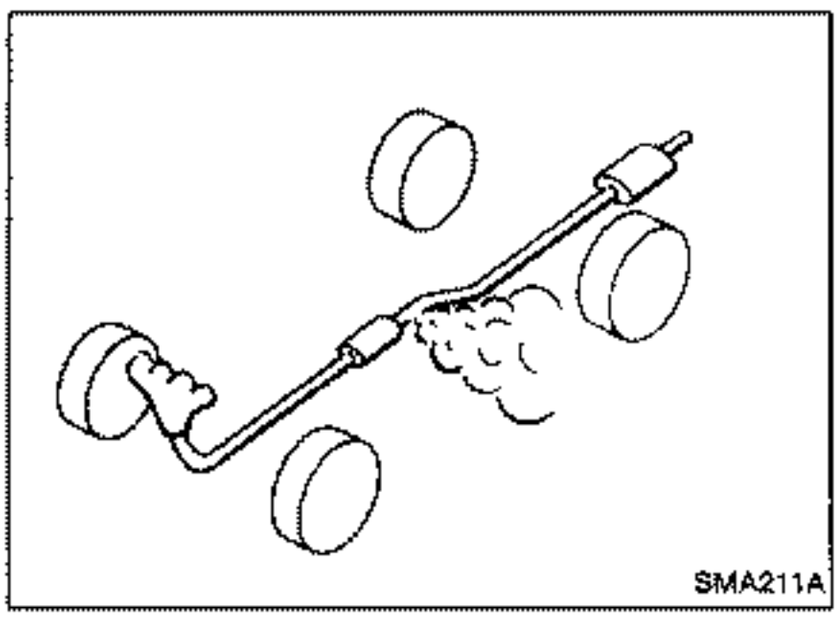

Checking Exhaust System

- Check exhaust pipes, muffler and mounting for proper attachment, leaks, cracks, damage, loose connections, chafing and deterioration.

Lubricating Locks, Hinges and Hood Latches

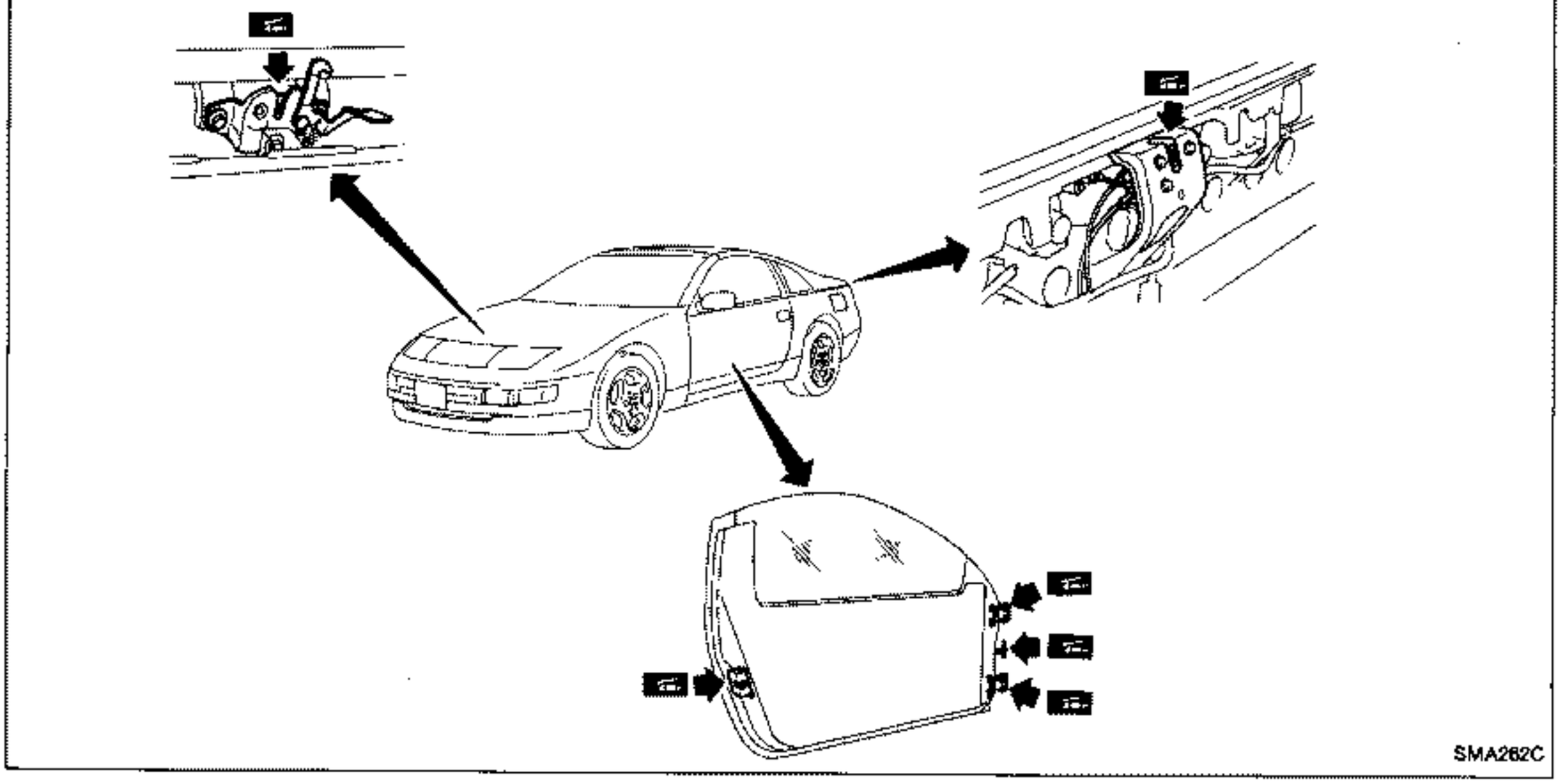

SMA262C

Checking Seat Belts, Buckles, Retractors, Anchors and Adjusters

CAUTION:

1. **All seat belt assemblies, including retractors and attaching hardwares such as guide rail set, etc., should be inspected after any collision. Nissan recommends that all seat belt assemblies in use during a collision be replaced unless the collision was minor and the belts show no damage and continue to operate properly. Seat belt assemblies not in use during a collision should also be inspected and replaced if either damage or improper operation is noted.**
2. **If the condition of any component of seat belt assembly is questionable, do not have it repaired, but replaced as seat belt assembly.**
3. **If webbing is cut, frayed, or damaged, replace belt assembly.**
4. **Do not spill drinks, oil, etc. on inner lap belt buckle. Never oil tongue and buckle.**
5. **Use a NISSAN genuine seat belt assembly.**

Anchor bolt
43 - 55 N-m
(4.4 - 5.6 kg-m, 32 - 41 ft-lb)

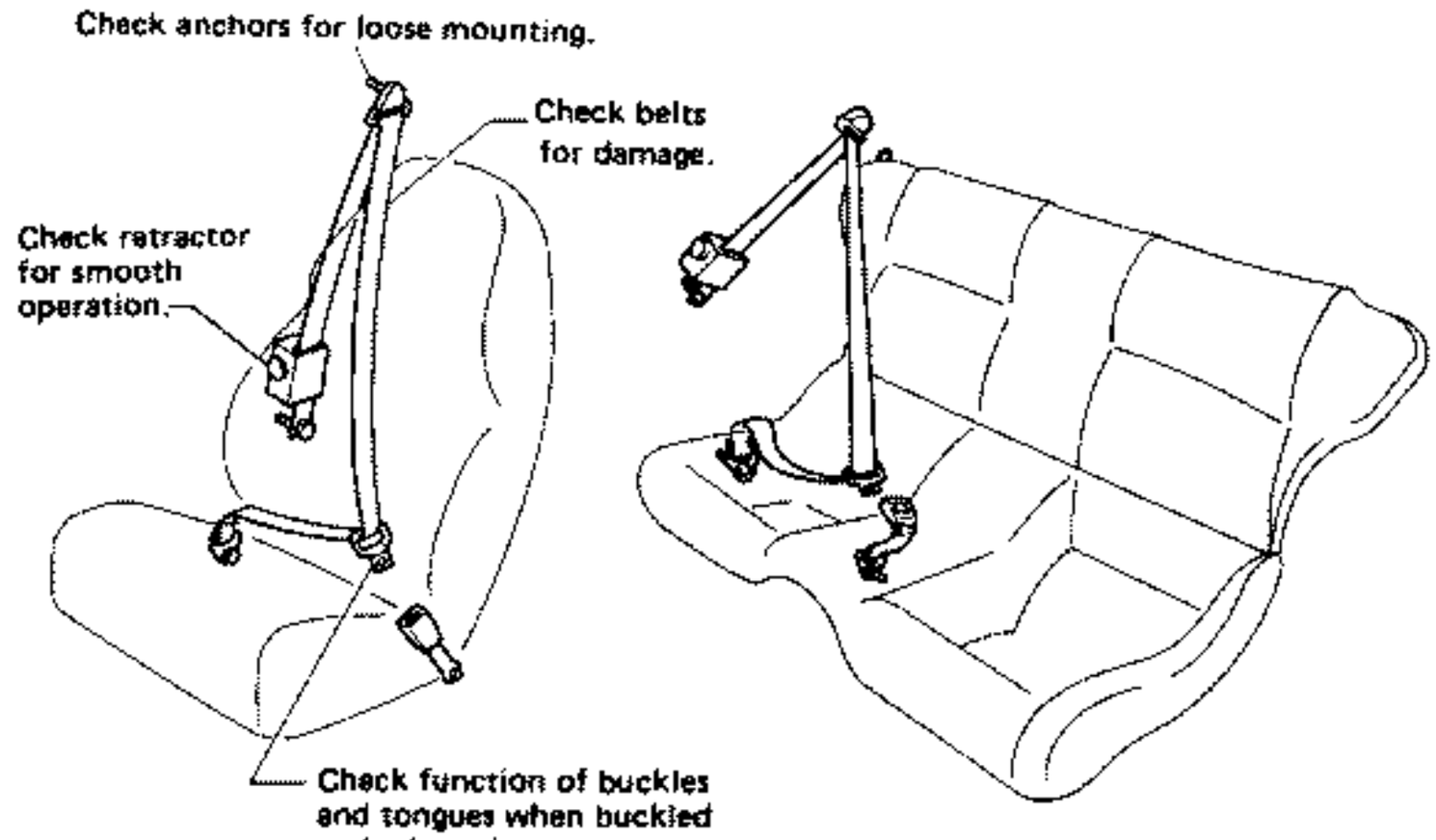

SMA171C

Checking Body Corrosion

Visually check the body sheet metal panel for corrosion, paint damage (scratches, chipping, rubbing, etc.) or damage to the anti-corrosion materials. In particular, check the following locations.

Hemmed portion

Hood front end, door lower end, trunk lid rear end, etc.

Panel joint

Side sill of rear fender and center pillar, rear wheel housing of rear fender, around strut tower in engine compartment, etc.

Panel edge

Trunk lid opening, sun roof opening, fender wheel-arch flange, fuel filler lid flange, around holes in panel, etc.

Parts contact

Waist moulding, windshield moulding, bumper, etc.

Protectors

Damage or condition of mudguard, fender protector, chipping protector, etc.

Anti-corrosion materials

Damage or separation of anti-corrosion materials under the body.

Drain holes

Condition of drain holes at door and side sill.

When repairing corroded areas, refer to the Corrosion Repair Manual.

Engine Maintenance

INSPECTION AND ADJUSTMENT

Drive belt deflection

Unit: mm (in)

	Used belt deflection		Deflection of new belt
	Limit	Deflection after adjustment	
Alternator	11.5 (0.453)	7 - 8 (0.28 - 0.31)	6.5 - 7.5 (0.256 - 0.295)
Air conditioner compressor	12.5 (0.492)	8 - 9 (0.31 - 0.35)	7 - 8 (0.28 - 0.31)
Power steering oil pump	19 (0.75)	12 - 13.5 (0.472 - 0.531)	10.5 - 11.5 (0.413 - 0.453)
Applied pushing force	98 N (10 kg, 22 lb)		

Oil capacity (Refill)

Non-Turbo

Unit: ℓ (Imp qt)

With oil filter	3.4 (3)
Without oil filter	3.0 (2-5/8)

Turbo (Without oil cooler)

Unit: ℓ (Imp qt)

With oil filter	3.4 (3)
Without oil filter	3.0 (2-5/8)

Coolant capacity

Unit: ℓ (Imp qt)

With reservoir tank	10.0 (8-3/4)
Reservoir tank	0.6 (1/2)

Spark plug

Non-Turbo

Standard type	PFR6B-11
Hot type	PFR5B-11
Cold type	PFR7B-11

Turbo

Standard type	PFR6B-11C
Hot type	PFR5B-11C
Cold type	PFR7B-11C

Chassis and Body Maintenance

INSPECTION AND ADJUSTMENT

Clutch

Unit: mm (in)

Applied model	L.H.D.	R.H.D.	
		VG30DE	VG30DETT
Pedal free height	183 - 193 (7.20 - 7.60)	211 - 221 (8.31 - 8.70)	197 - 207 (7.76 - 8.15)
Pedal free play	1 - 3 (0.04 - 0.12)		

Front axle and front suspension (Unladen)*

Camber	degree	–1°35′ to –0°05′
Caster	degree	9°00′ - 10°30′
Toe-in	mm (in)	0 - 2 (0 - 0.08)
(Total toe-in angle)	degree	0′ - 11′
Kingpin inclination	degree	12°10′ - 13°40′
Front wheel turning angle Full turn Inside/outside	degree	32° - 36°/27° - 31°

*: Fuel, radiator coolant and engine oil full.
Spare tire, jack, hand tools and mats in designated positions.

Rear axle and rear suspension (Unladen)*

Camber	degree	–1°35′ to –0°35′
Toe-in	mm (in)	0 - 4 (0 - 0.16)
(Total toe-in angle)	degree	0′ - 22′

*: Fuel, radiator coolant and engine oil full.
Spare tire, jack, hand tools and mats in designated positions.

Wheel bearing

	Front	Rear
Wheel bearing axle end play mm (in)	0.05 (0.0020) or less	
Wheel bearing lock nut Tightening torque N·m (kg-m, ft-lb)	206 - 284 (21 - 29, 152 - 210)	206 - 275 (21 - 28, 152 - 203)

Brake

Unit: mm (in)

Disc brake	
Pad	
Standard thickness	
OPZ25V OPF25V	10.0 (0.394)
OPZ11VB	11.5 (0.453)
Minimum thickness	
OPZ25V OPF25V	2.0 (0.079)
OPZ11VB	2.0 (0.079)
Rotor	
Standard thickness	
OPZ25V OPF25V	26.0 (1.024) 30.0 (1.181)
OPZ11VB	18 (0.71)
Minimum thickness	
OPZ25V OPF25V	24.0 (0.945) 28.0 (1.102)
OPZ11VB	16.0 (0.630)
Pedal	
Free height	
M/T	186 - 196 (7.32 - 7.72)
A/T	195 - 205 (7.68 - 8.07)
Free play at clevis	1 - 3 (0.04 - 0.12)
Depressed height [under force of 490 N (50 kg, 110 lb) with engine running]	
M/T	
Without A.B.S.	95 (3.74) or more
With A.B.S.	105 (4.13) or more
A/T	
Without A.B.S.	105 (4.13) or more
With A.B.S.	110 (4.33) or more
Parking brake	
Number of notches [at pulling force 196 N (20 kg, 44 lb)]	6 - 7

Wheel balance

Wheel balance (Maximum allowable unbalance at rim flange)	g (oz)	10 (0.35)
Tire balance weight	g (oz)	5 - 60 (0.18 - 2.12) Spacing 5 (0.18)

TIGHTENING TORQUE

Unit	N·m	kg-m	ft-lb
Clutch			
A.S.C.D. cancel switch and clutch switch lock nut	12 - 15	1.2 - 1.5	9 - 11
Manual transmission			
Drain and filler plugs	25 - 34	2.5 - 3.5	18 - 25
Final drive			
Drain plug	39 - 59	4 - 6	29 - 43
Filler plug	39 - 59	4 - 6	29 - 43
Front axle and front suspension			
Tie-rod lock nut	78 - 98	8.0 - 10.0	58 - 72
Rear axle and rear suspension			
Toe adjusting pin	69 - 88	7.0 - 9.0	51 - 65
Camber adjusting pin (Models without SUPER HICAS)	69 - 88	7.0 - 9.0	51 - 65
Lower link lock nut (Models with SUPER HICAS)	37 - 46	3.8 - 4.7	27 - 34
Brake system			
Air bleed valve	7 - 9	0.7 - 0.9	5.1 - 6.5
Brake lamp switch lock nut	12 - 15	1.2 - 1.5	9 - 11
Brake booster input rod lock nut	16 - 22	1.6 - 2.2	12 - 16
Wheel and tire			
Wheel nut	98 - 118	10.0 - 12.0	72 - 87

Z.ONE.DATSUN

ENGINE MECHANICAL

SECTION EM

CONTENTS

PRECAUTIONS ..... EM- 2
PREPARATION ..... EM- 3
OUTER COMPONENT PARTS ..... EM- 6
COMPRESSION PRESSURE ..... EM- 9
OIL PAN EM-10
TIMING BELT EM-13
OIL SEAL REPLACEMENT EM-21
THROTTLE CHAMBERS EM-23
CYLINDER HEAD EM-26
TURBOCHARGERS EM-38
INTERCOOLERS EM-44
ENGINE REMOVAL EM-45
CYLINDER BLOCK EM-49
SERVICE DATA AND SPECIFICATIONS (S.D.S.) EM-62

Z.ONE.DATSUN

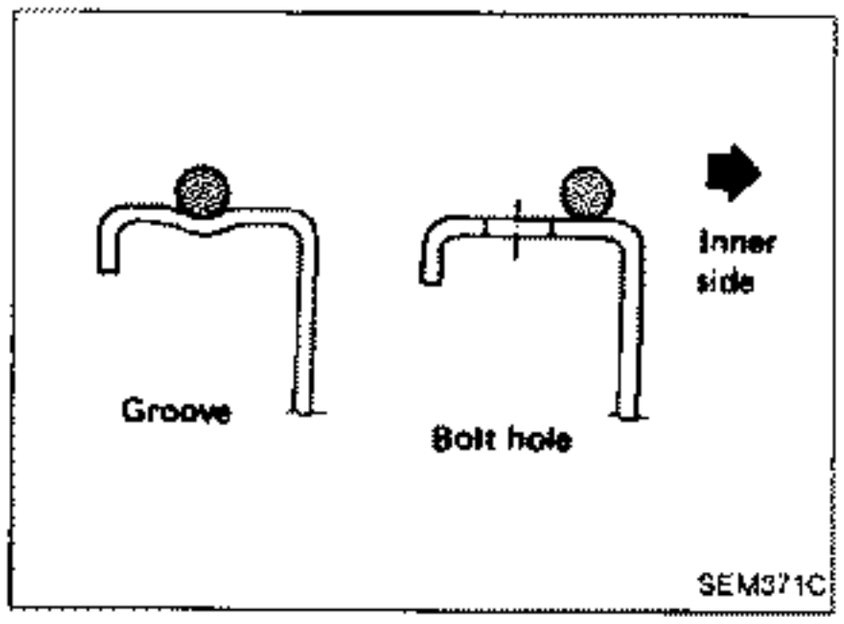

Liquid Gasket Application Procedure

a. **Before applying liquid gasket, use a scraper to remove all traces of old liquid gasket from mating surface.**
b. **Apply a continuous bead of liquid gasket to mating surfaces. (Use Genuine Liquid Gasket or equivalent.)**
   - **Be sure liquid gasket is 3.5 to 4.5 mm (0.138 to 0.177 in) wide (for oil pan).**
   - **Be sure liquid gasket is 2.0 to 3.0 mm (0.079 to 0.118 in) wide (in areas except oil pan).**
c. **Apply liquid gasket to inner sealing surface around entire perimeter area.**
   (Assembly should be done within 5 minutes after coating.)
d. **Wait at least 30 minutes before refilling engine oil and engine coolant.**

Parts Requiring Angular Tightening

- Some important engine parts are tightened using an angular-tightening method rather than a torque setting method.
- If these parts are tightened using a torque setting method, dispersal of the tightening force (axial bolt force) will be two or three times that of the dispersal produced by using the correct angular-tightening method.
- Although the torque setting values (described in this manual) are equivalent to those used when bolts and nuts are tightened with an angular-tightening method, they should be used for reference only.
- To assure the satisfactory maintenance of the engine, bolts and nuts must be tightened using an angular-tightening method.
- Before tightening the bolts and nuts, ensure that the thread and seating surfaces are clean and then coated with engine oil.
- The bolts and nuts which require the angular-tightening method are as follows:
  (1) Cylinder head bolts
  (2) Connecting rod cap nuts

SPECIAL SERVICE TOOLS

Tool number Tool name	Description	
ST0501S000 Engine stand assembly ①ST05011000 Engine stand ②ST05012000 Base	Disassembling and assembling	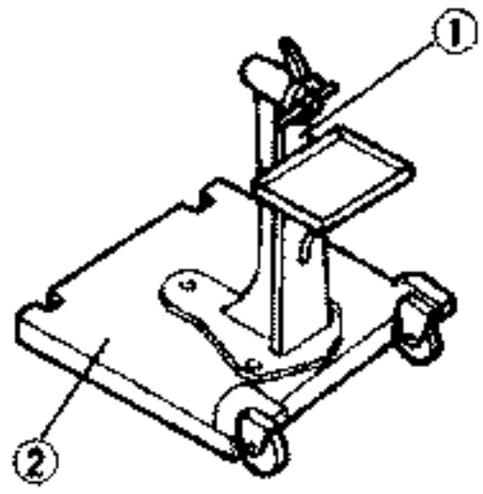
KV10106500 Engine stand shaft		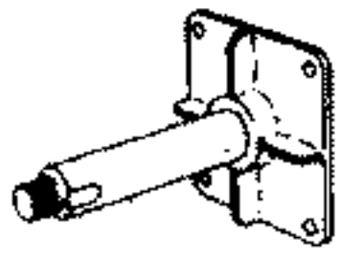
KV10110001 Engine sub-attachment		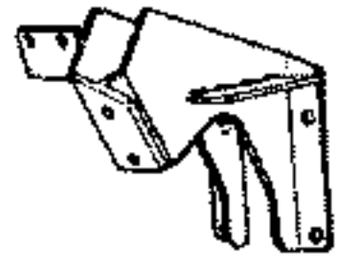
ST10120000 Cylinder head bolt wrench	Loosening and tightening cylinder head bolt	
KV10111300 Valve spring compressor	Disassembling and assembling valve components	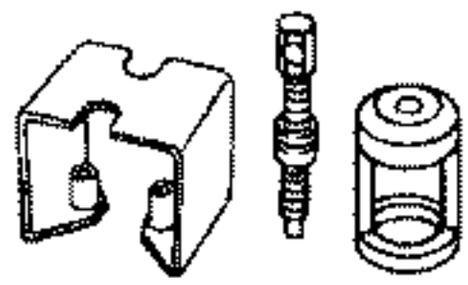
①KV10107501 Valve oil seal drift ②KV10111400 Attachment	Installing valve oil seal	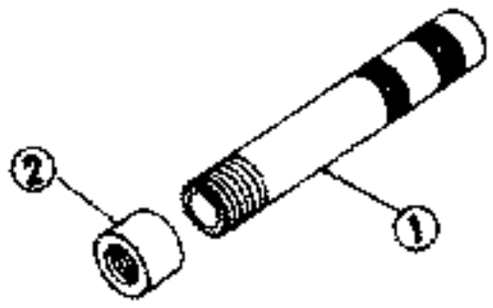
ST27180001 Steering wheel puller	Removing crankshaft pulley	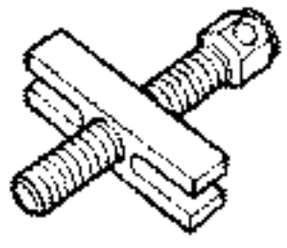
KV10114400 Exhaust gas sensor wrench	Loosening or tightening exhaust gas sensor	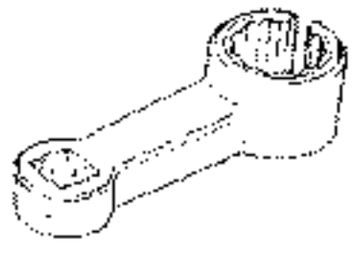

Tool number Tool name	Description	
①EG14860000 Push-pull gauge ②KV10112000 Hook	Adjusting timing belt tension	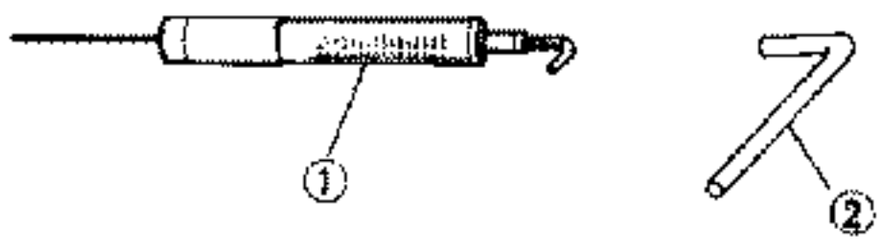
EM03470000 Piston ring compressor	Installing piston assembly into cylinder bore	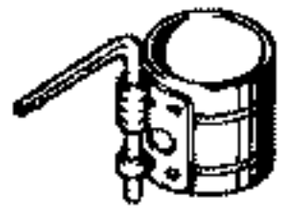
ST16610001 Pilot bushing puller	Removing crankshaft pilot bushing	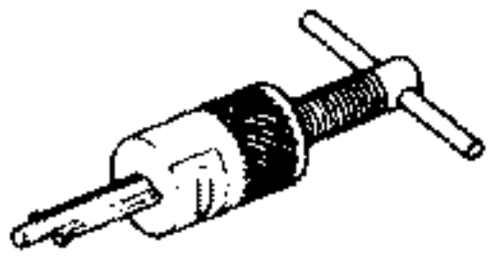
KV10111100 Seal cutter	Removing oil pan	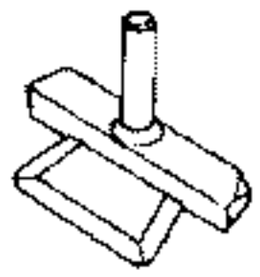
WS39930000 Tube presser	Pressing the tube of liquid gasket	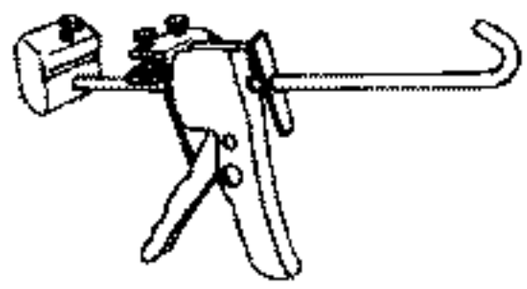
ST33200000 Drift	Installing camshaft oil seal	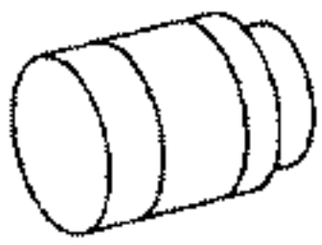
KV38100300 Drift	Installing front oil seal	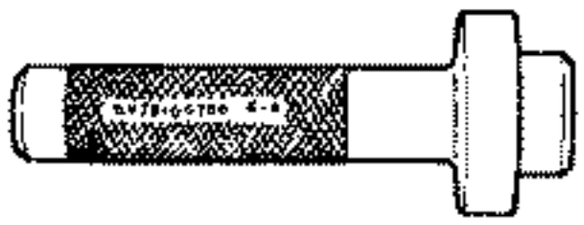
ST15310000 Drift	Installing rear oil seal	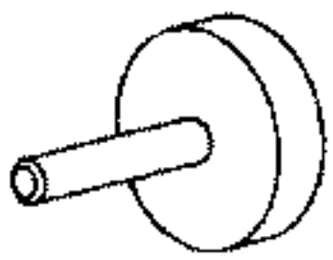

COMMERCIAL SERVICE TOOLS

Tool name	Description	
Spark plug wrench	Removing and installing spark plug	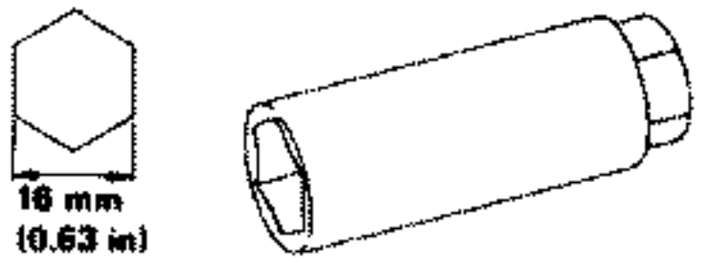
Pulley holder	Holding camshaft pulley while tightening or loosening camshaft bolt	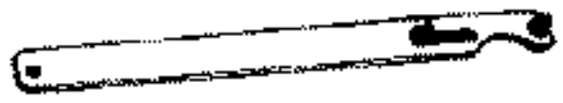
Valve seat cutter set	Finishing valve seat dimensions	
Piston ring expander	Removing and installing piston ring	
Valve guide drift	Removing and installing valve guide	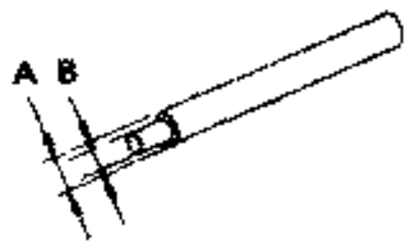 Intake & Exhaust: A = 9.5 mm (0.374 in) dia. B = 5.5 mm (0.217 in) dia.
Valve guide reamer	Reaming valve guide ① or hole for oversize valve guide ②	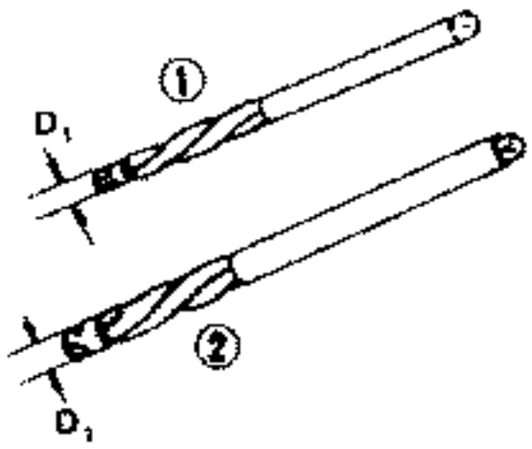 D_1 = 6.0 mm (0.236 in) dia. D_2 = 10.2 mm (0.402 in) dia.
Valve oil seal remover	Removing valve oil seals	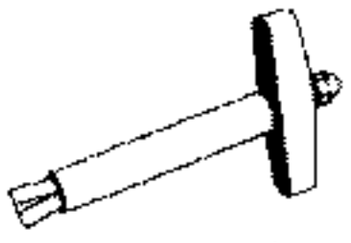

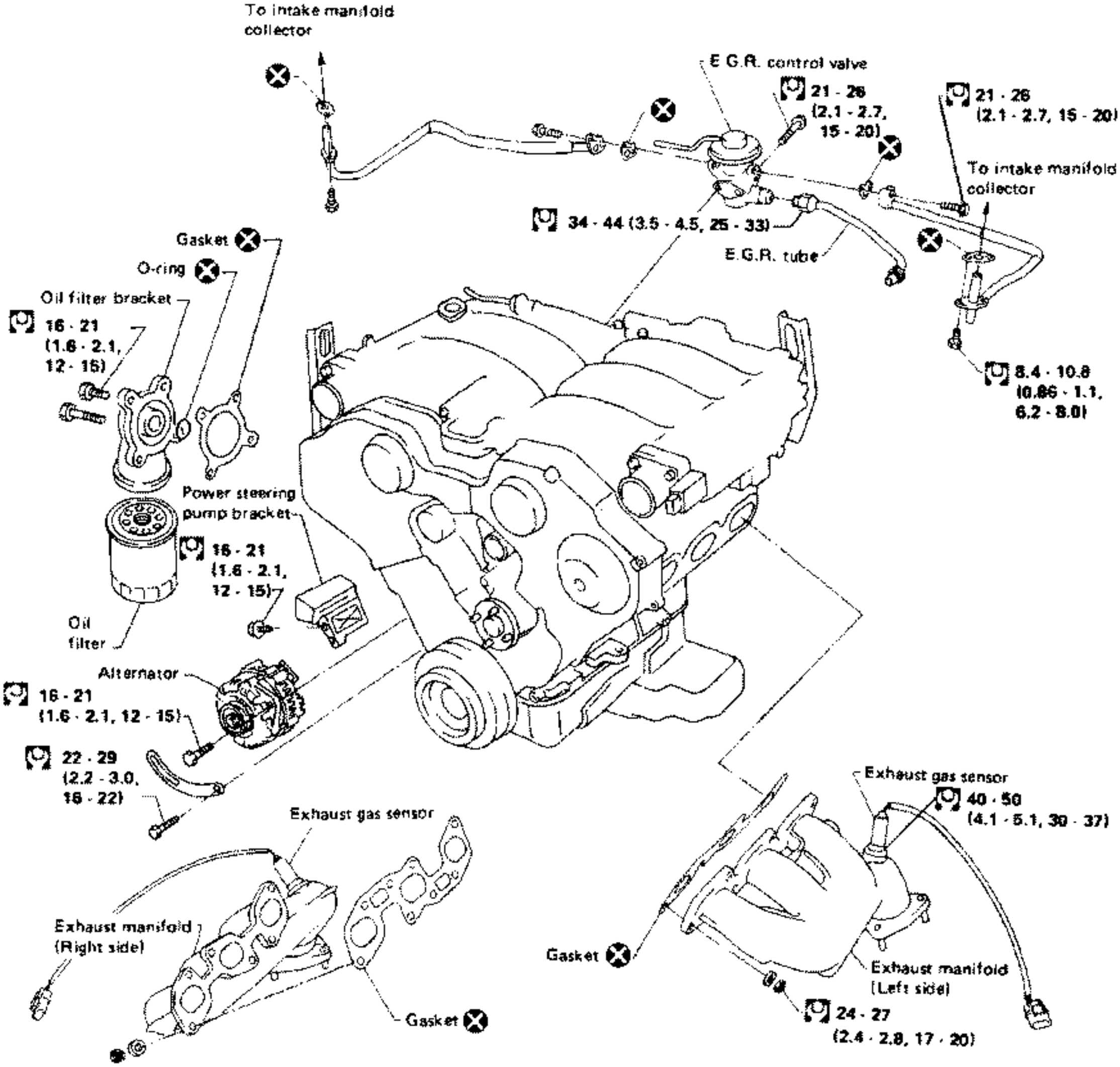

: N·m (kg·m, ft-lb)

SEM964C

Turbo model

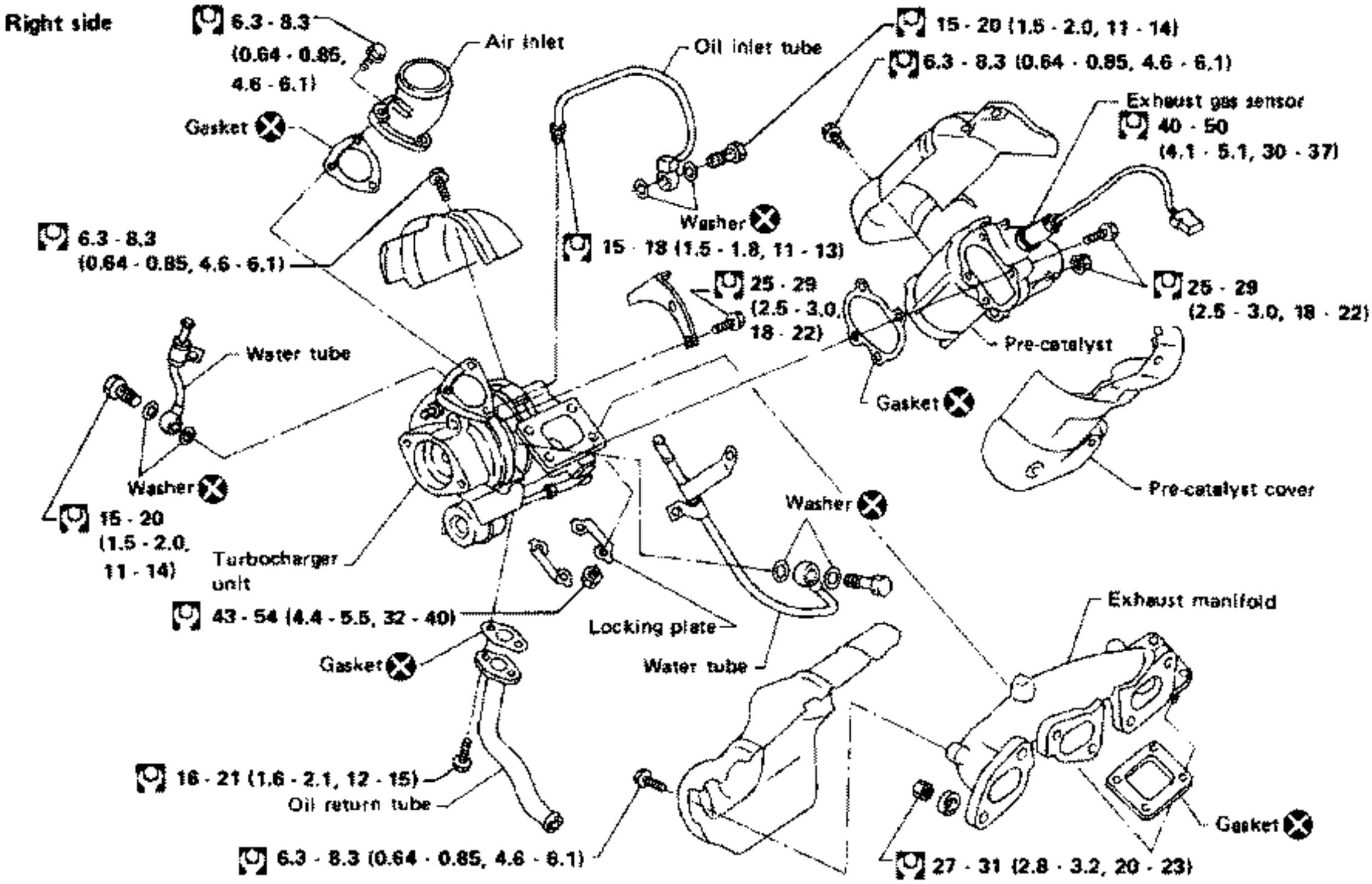

SEM773C

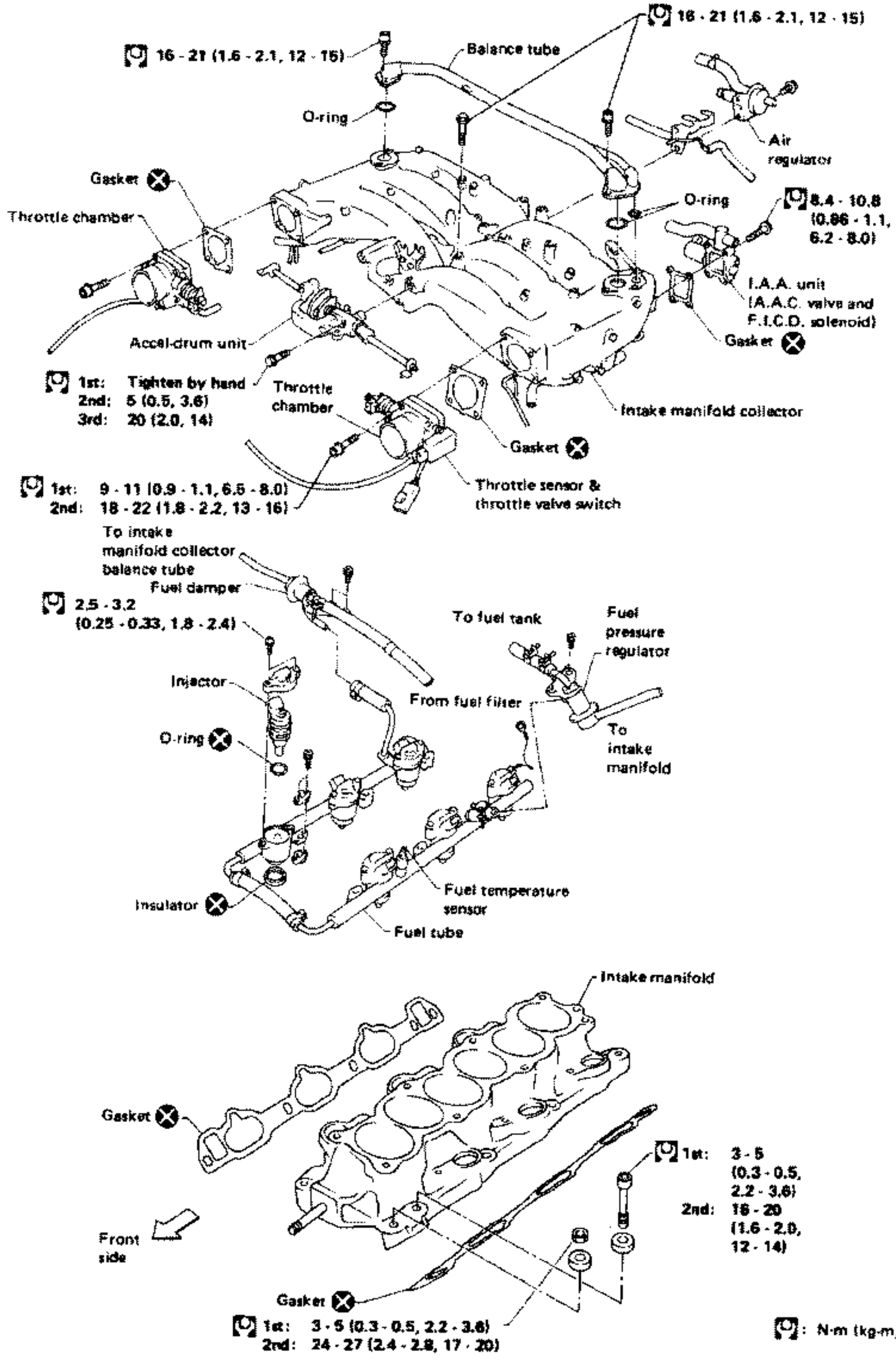
16 - 21 (1.6 - 2.1, 12 - 15)
Balance tube
16 - 21 (1.6 - 2.1, 12 - 15)
O-ring
Air regulator
Gasket
Throttle chamber
O-ring
8.4 - 10.8 (0.86 - 1.1, 6.2 - 8.0)
I.A.A. unit (A.A.C. valve and F.I.C.D. solenoid)
Gasket
Accel-drum unit
1st: Tighten by hand
2nd: 5 (0.5, 3.6)
3rd: 20 (2.0, 14)
Throttle chamber
Intake manifold collector
Gasket
1st: 9 - 11 (0.9 - 1.1, 6.5 - 8.0)
2nd: 18 - 22 (1.8 - 2.2, 13 - 16)
Throttle sensor & throttle valve switch
To intake manifold collector balance tube
Fuel damper
2.5 - 3.2 (0.25 - 0.33, 1.8 - 2.4)
To fuel tank
Fuel pressure regulator
Injector
From fuel filter
To intake manifold
O-ring
Fuel temperature sensor
Insulator
Fuel tube
Intake manifold
Gasket
Front side
1st: 3 - 5 (0.3 - 0.5, 2.2 - 3.6)
2nd: 16 - 20 (1.6 - 2.0, 12 - 14)
Gasket
1st: 3 - 5 (0.3 - 0.5, 2.2 - 3.6)
2nd: 24 - 27 (2.4 - 2.8, 17 - 20)
: N·m (kg-m, ft-lb)

SEM618C

Measurement of Compression Pressure

1. Warm up engine.
2. Turn ignition switch off.
3. Release fuel pressure.
   Refer to "Releasing Fuel Pressure" in section EF & EC.
4. Remove all spark plugs.
5. Disconnect crank angle sensor harness connector.

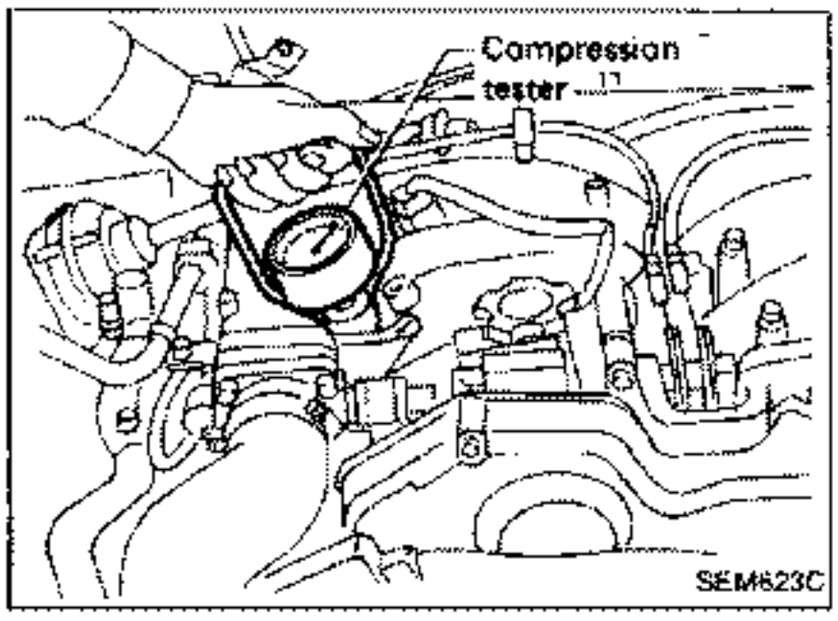

6. Attach a compression tester to No. 1 cylinder.
7. Depress accelerator pedal fully to keep throttle valve wide open.
8. Crank engine and record highest gauge indication.
9. Repeat the measurement on each cylinder as shown.

Always use a fully-charged battery to obtain specified engine revolution.

Compression pressure: kPa (bar, kg/cm^2, psi)/300 rpm

Standard

1,285 (12.85, 13.1, 186)

Minimum

981 (9.81, 10.0, 142)

Difference limit between cylinders

98 (0.98, 1.0, 14)

10. If cylinder compression in one or more cylinders is low, pour a small amount of engine oil into cylinders through the spark plug holes and retest compression.

- **If adding oil helps compression, piston rings may be worn or damaged. If so, replace piston rings after checking piston.**
- **If pressure stays low, a valve may be sticking or seating improperly. Inspect and repair valves and valve seats. (Refer to S.D.S.) If valves or valve seats are damaged excessively, replace them.**
- **If compression in any two adjacent cylinders is low and if adding oil does not help compression, there may be leakage past gasket surface. If so, replace cylinder head gasket.**

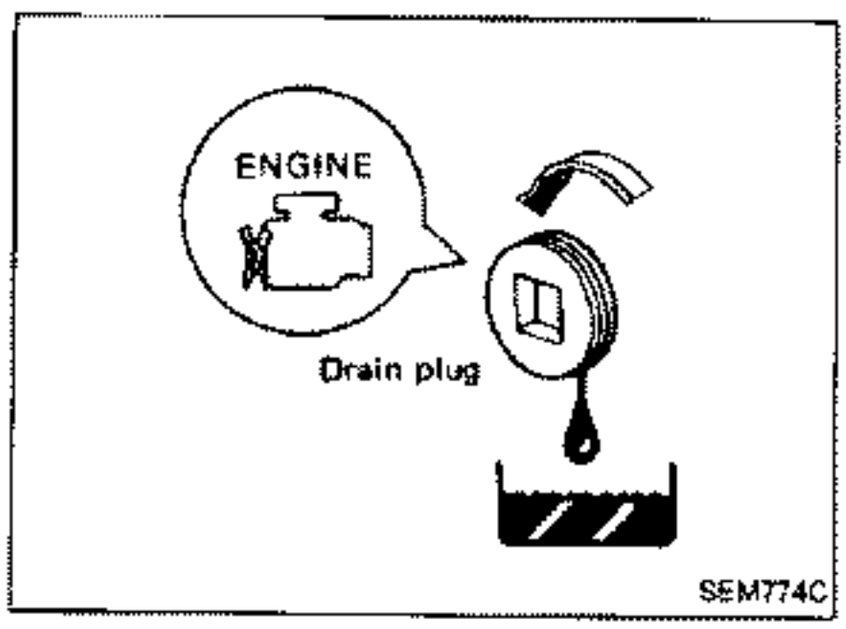

Removal

1. Drain engine oil.
2. Remove engine under cover.

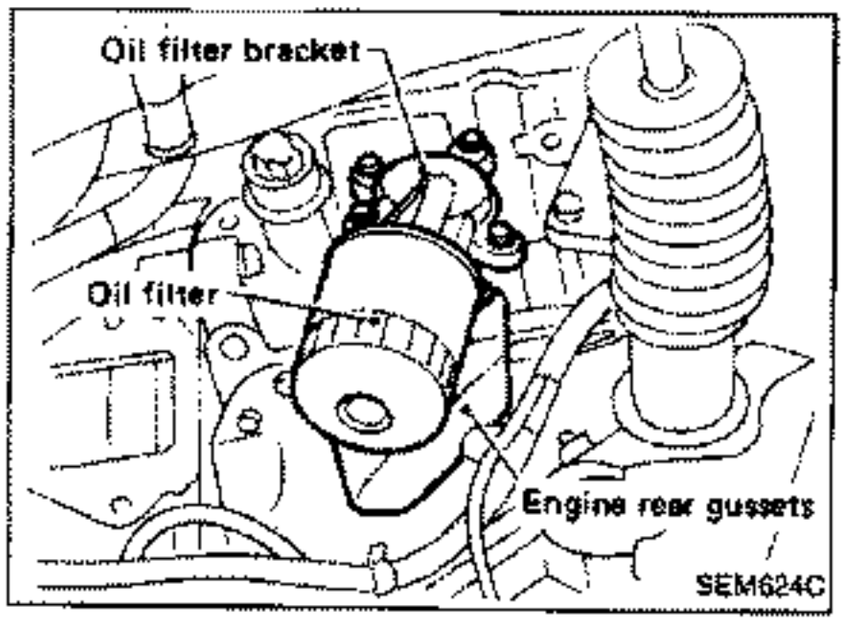

3. Remove oil filter and bracket.
4. Remove engine rear gussets from both sides.

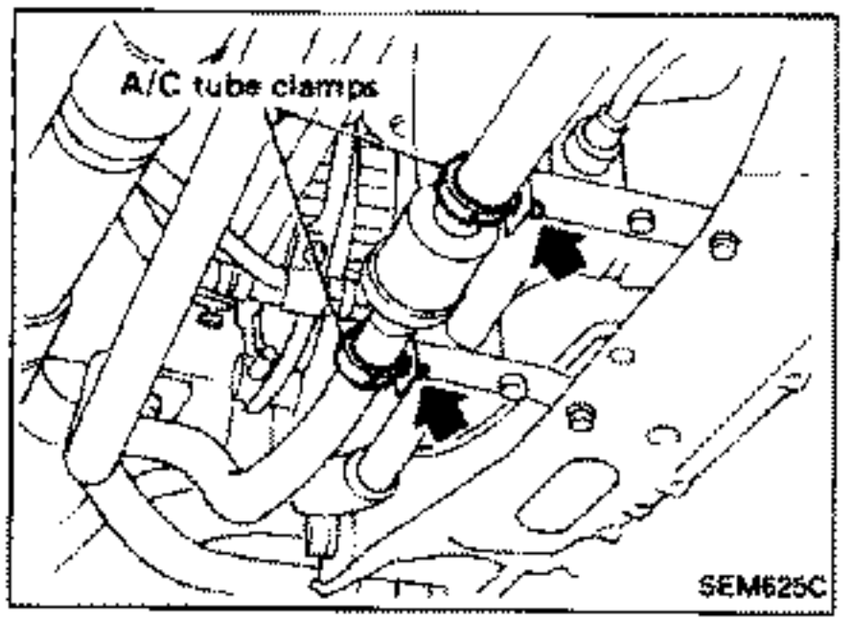

5. Disconnect A/C tube clamps as shown.

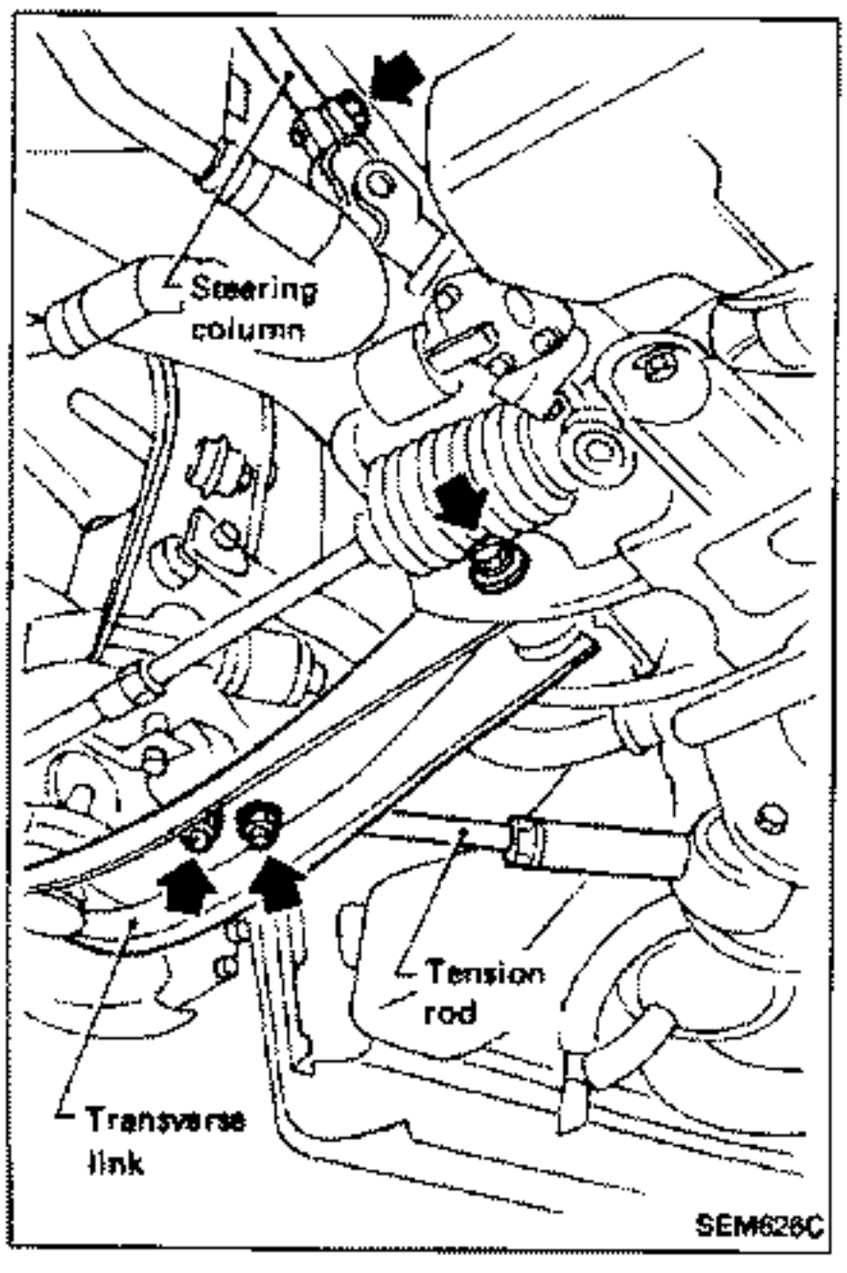

6. Disconnect steering column lower joint.
7. Remove tension rod fixing bolts from both sides.
8. Loosen transverse link bolts on both sides.

Removal (Cont'd)

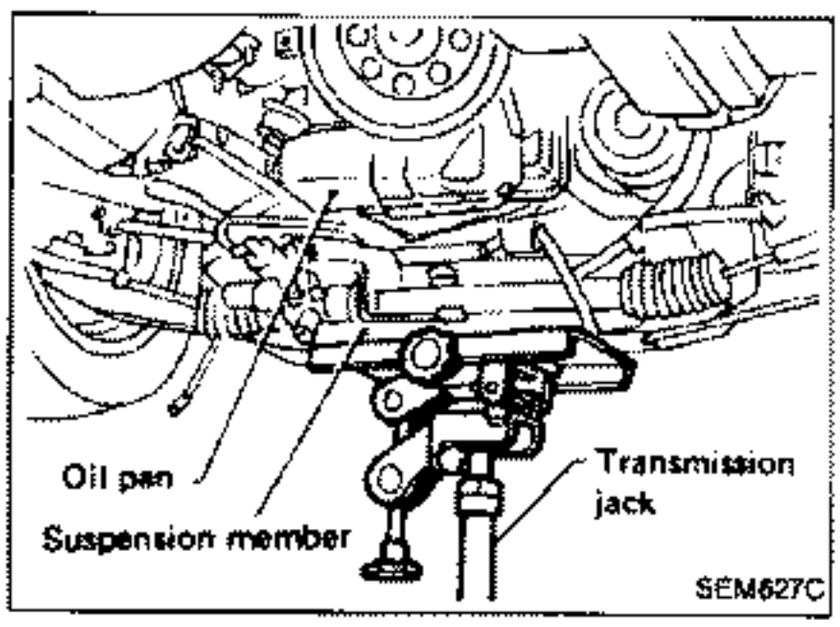

9. Set a suitable transmission jack under the suspension member.
- At this time, hoist engine with engine slingers.
10. Remove suspension member fixing bolts.
11. Remove engine mounting bolts from both sides and then slowly lower transmission jack.
12. Remove oil pan bolts.

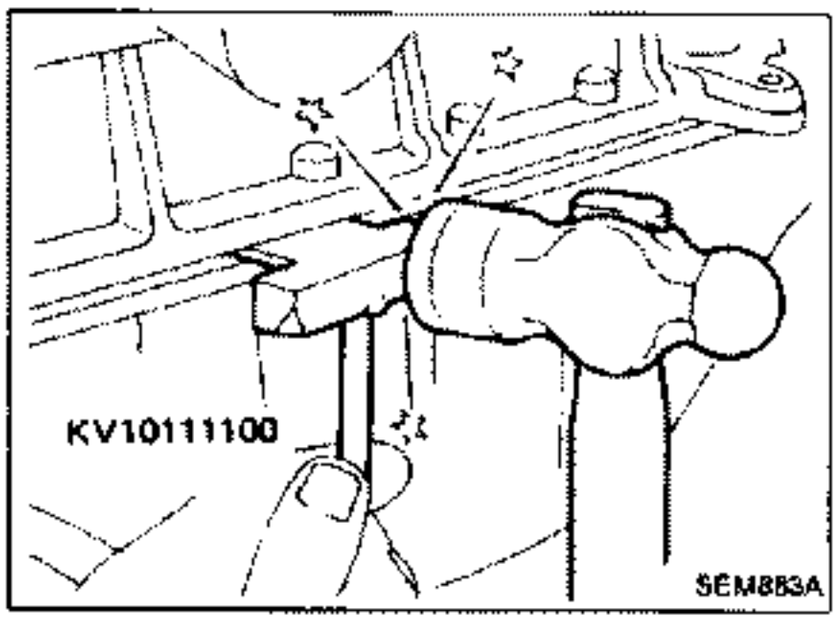

13. Remove oil pan.
(1) Insert Tool between cylinder block and oil pan.
- **Do not drive seal cutter into oil pump or rear oil seal retainer, as aluminum mating surfaces may be damaged.**
- **Do not insert screwdriver, or oil pan flange may be deformed.**

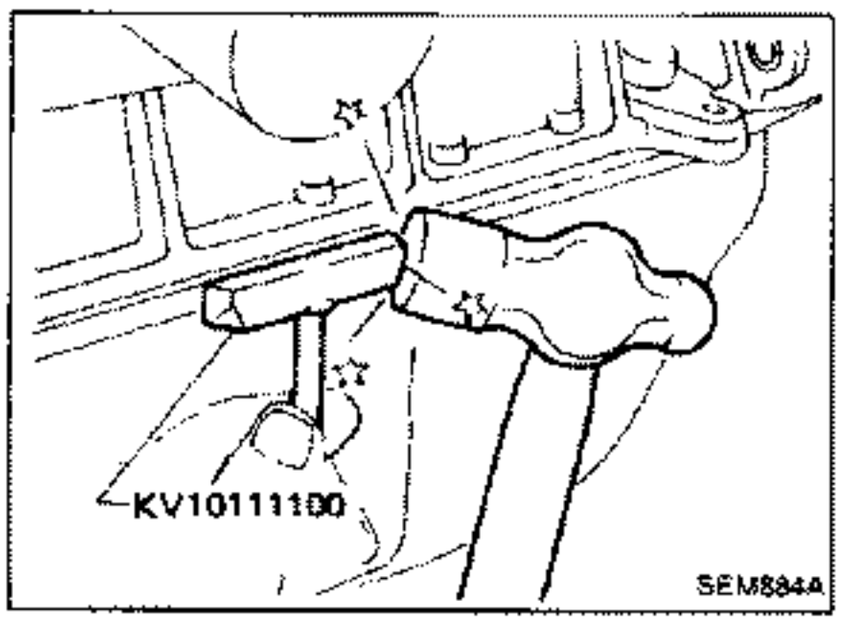

(2) Slide Tool by tapping its side with a hammer, and remove oil pan.

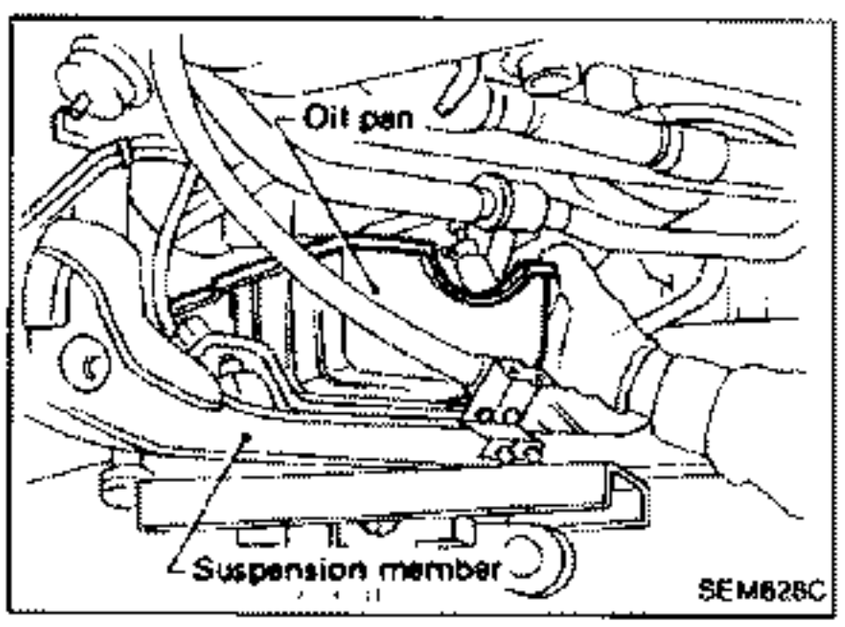

(3) Remove oil pan.

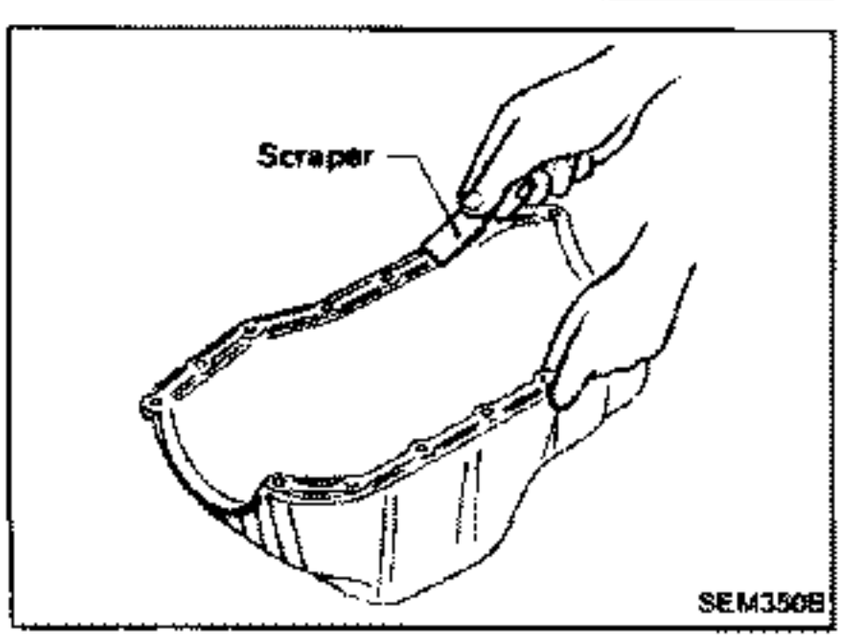

Installation

1. Before installing oil pan, remove all traces of liquid gasket from mating surface using a scraper.
- Also remove traces of liquid gasket from cylinder block mating surface.

Installation (Cont'd)

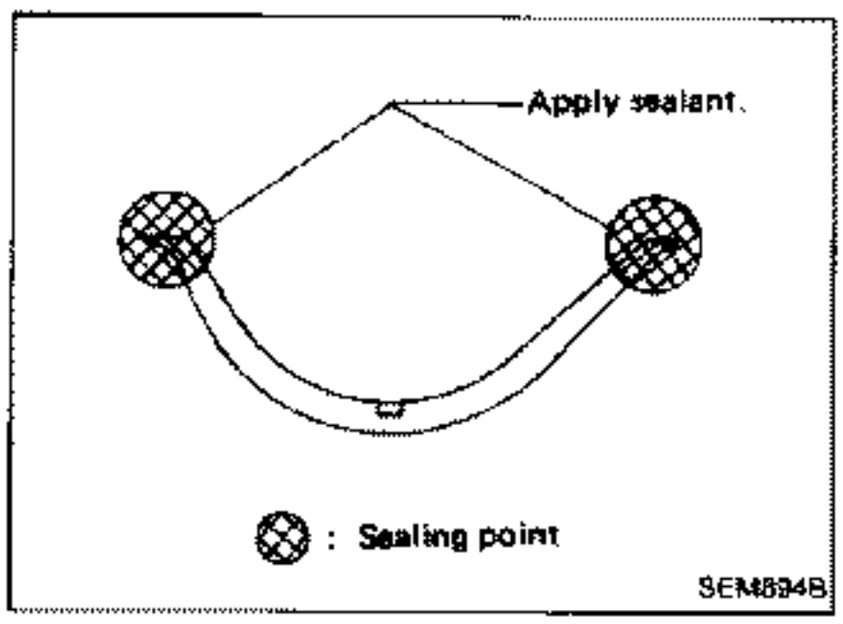

2. Apply sealant to oil pump gasket and rear oil seal retainer gasket.

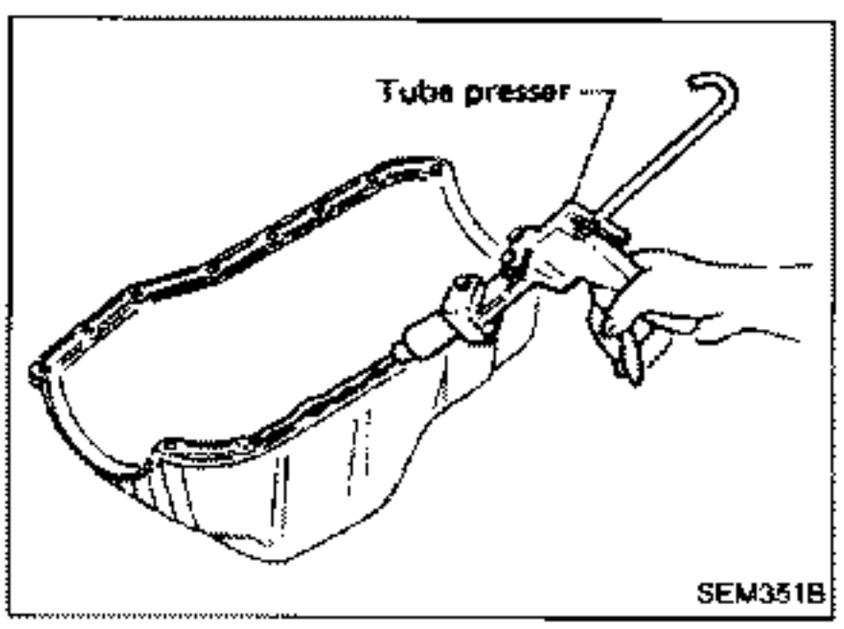

3. Apply a continuous bead of liquid gasket to oil pan mating surface.

Use Genuine Liquid Gasket or equivalent.

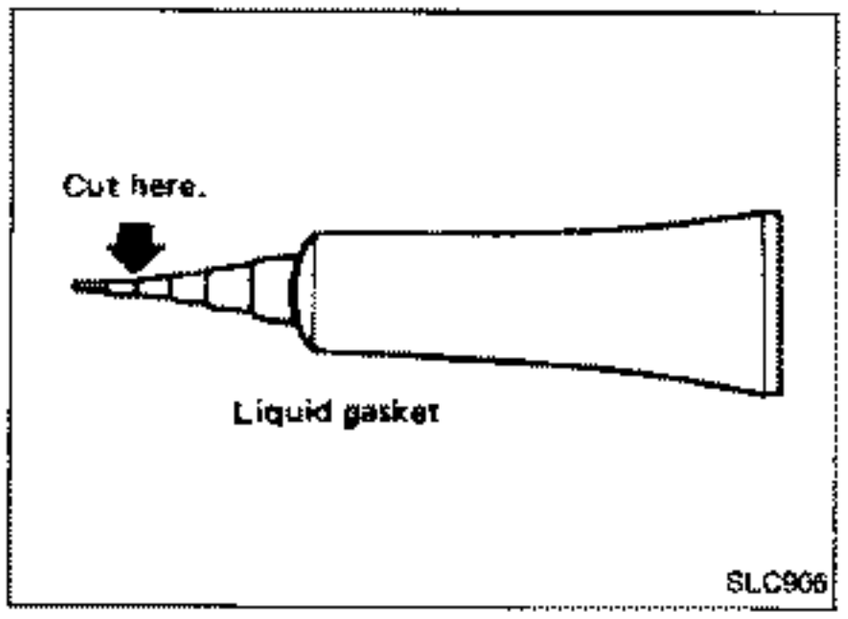

- Be sure liquid gasket is 3.5 to 4.5 mm (0.138 to 0.177 in) wide.

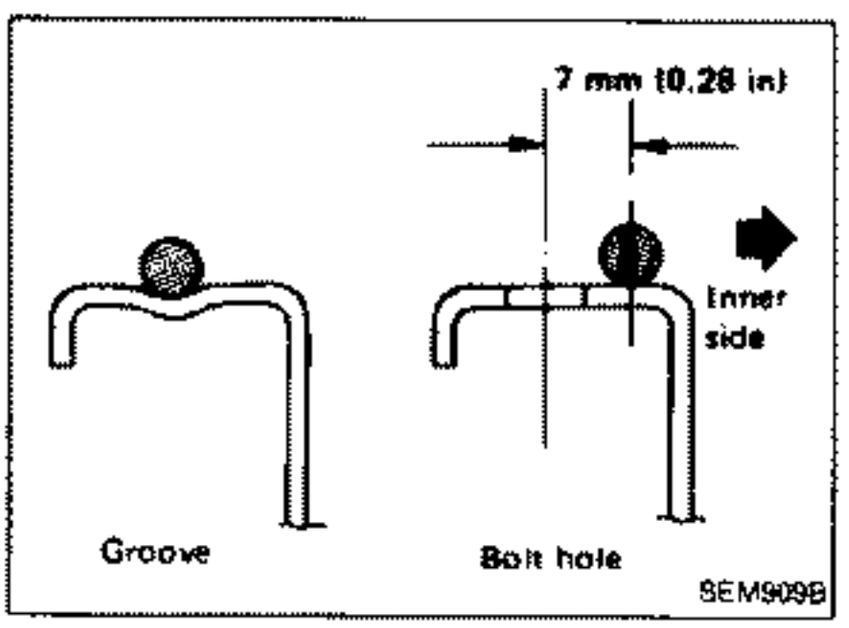

4. Apply liquid gasket to inner sealing surface as shown in figure.
- Attaching should be done within 5 minutes after coating.

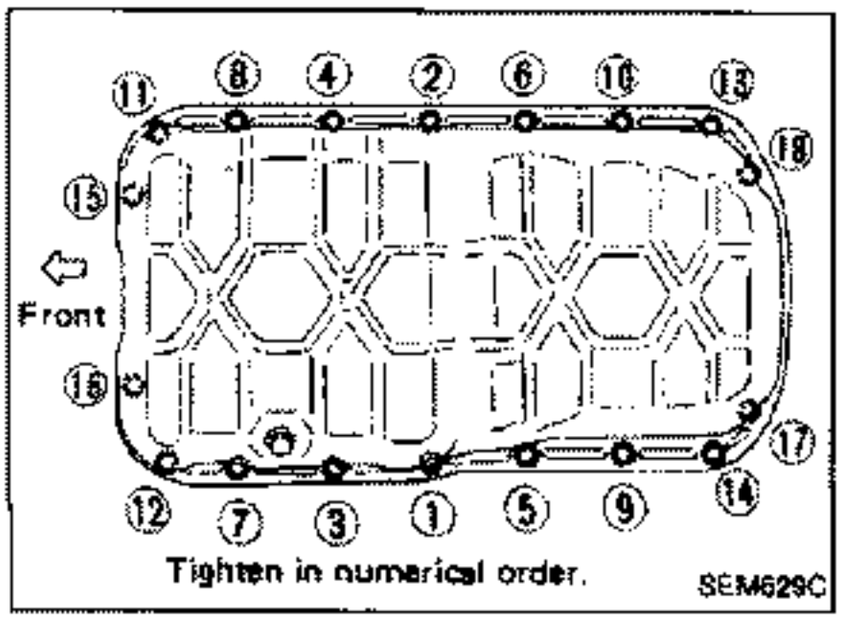

5. Install oil pan.
- **Install bolts/nuts in their reverse order of removal.**
- **Wait at least 30 minutes before refilling engine oil.**

CAUTION:

a. Do not bend or twist timing belt.
b. After removing timing belt, do not turn crankshaft and camshaft separately because valves will strike piston heads.
c. Make sure that timing belt, camshaft sprocket, crankshaft sprocket, idler pulley and auto-tensioner are clean and free of oil and water.

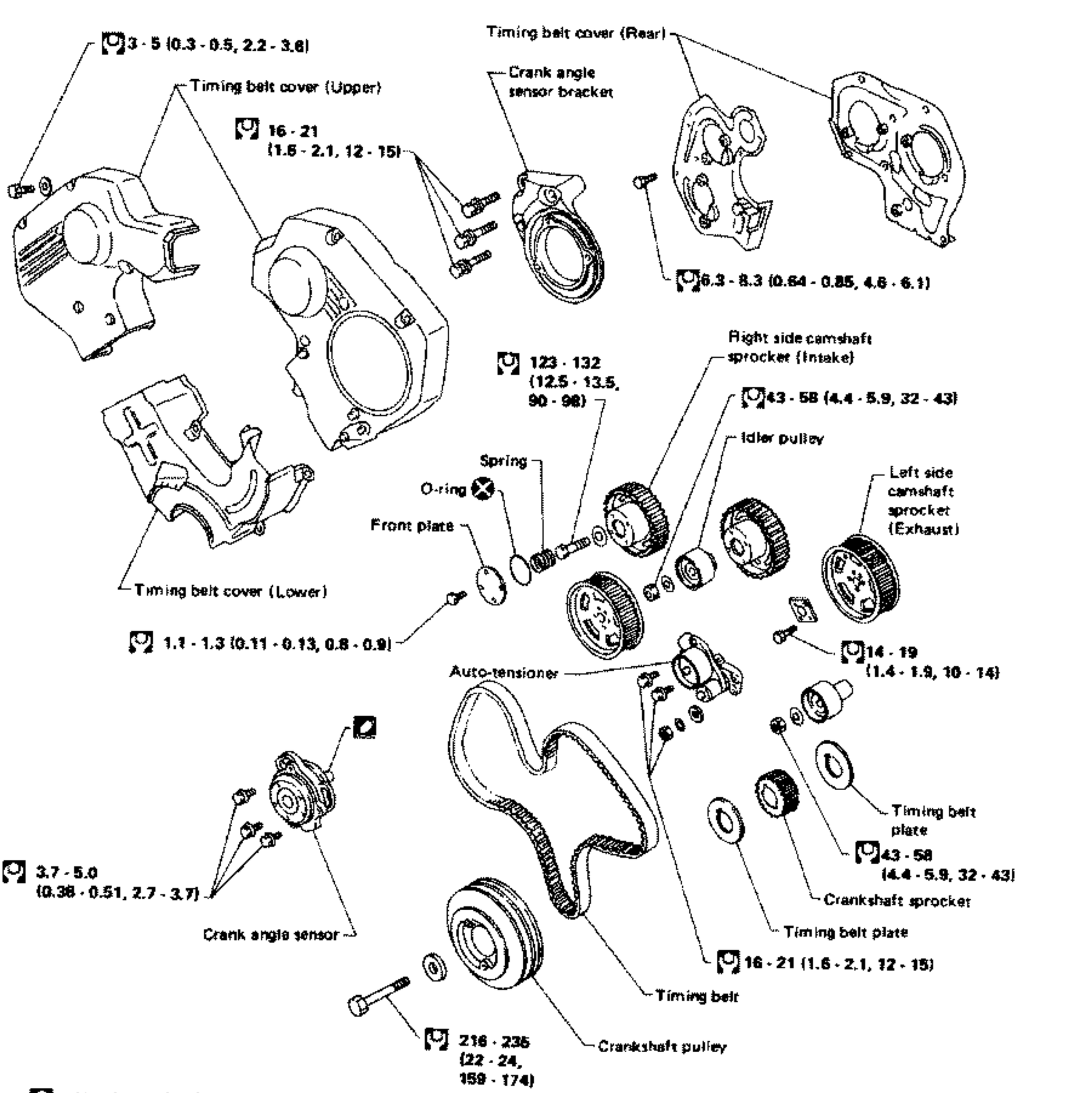

SEM619C

Removal

1. Remove engine under cover.
2. Drain coolant from both cylinder block drain plugs, and radiator drain cock.

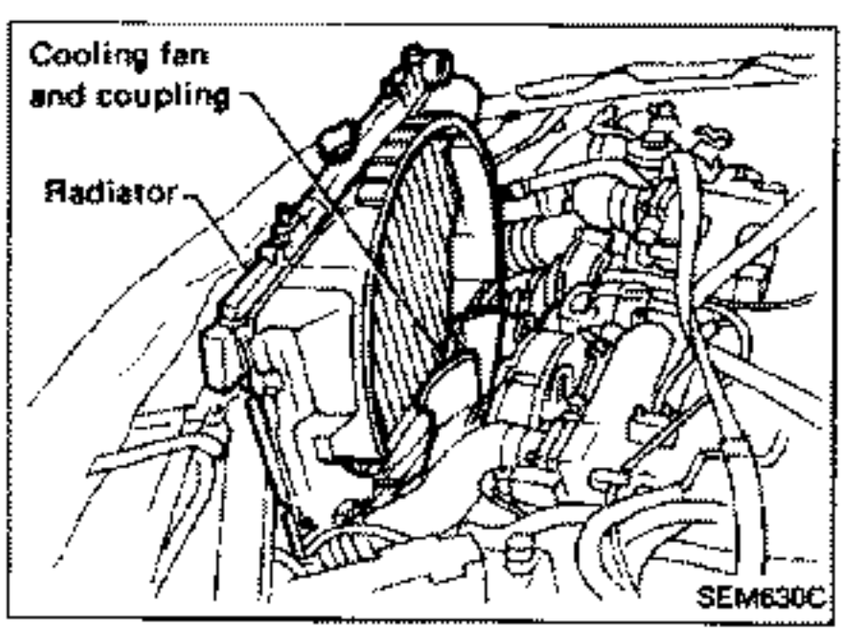

3. Remove radiator.
4. Remove drive belts, cooling fan and coupling.

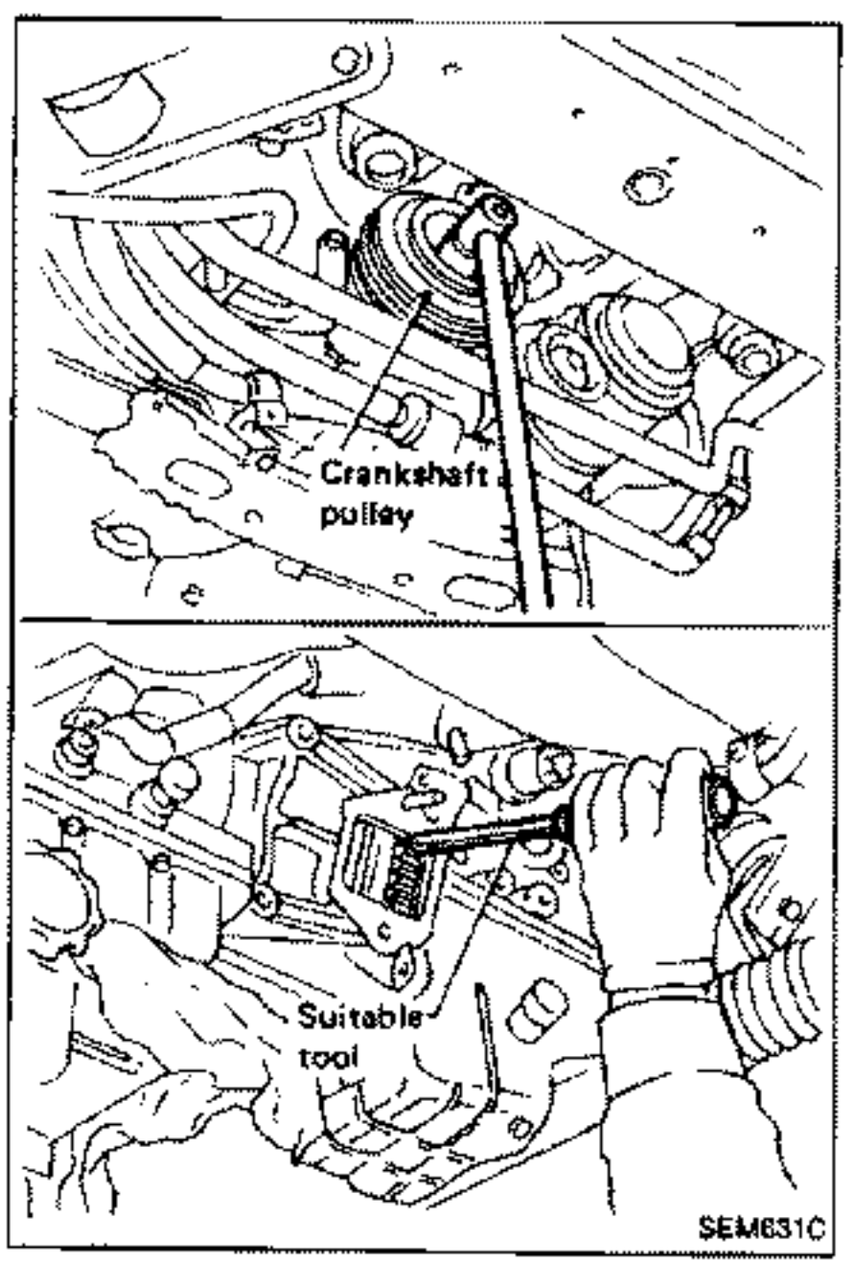

5. Remove crankshaft pulley bolt.
   (At this time, remove starter motor and set a suitable tool to ring gear so that crankshaft cannot rotate.)

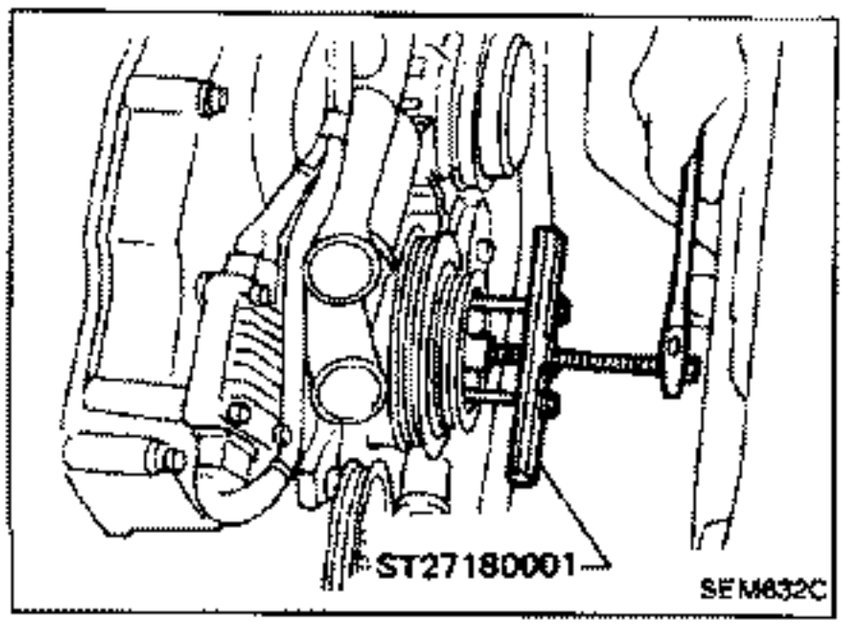

6. Remove crankshaft pulley using Tool.

Removal (Cont'd)

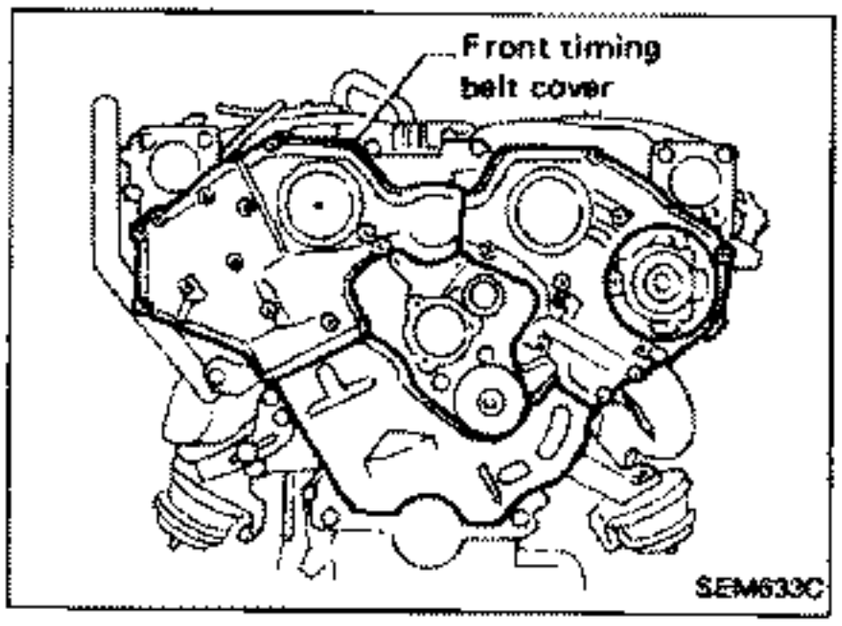

7. Remove water inlet and outlet.
8. Remove front timing belt covers.

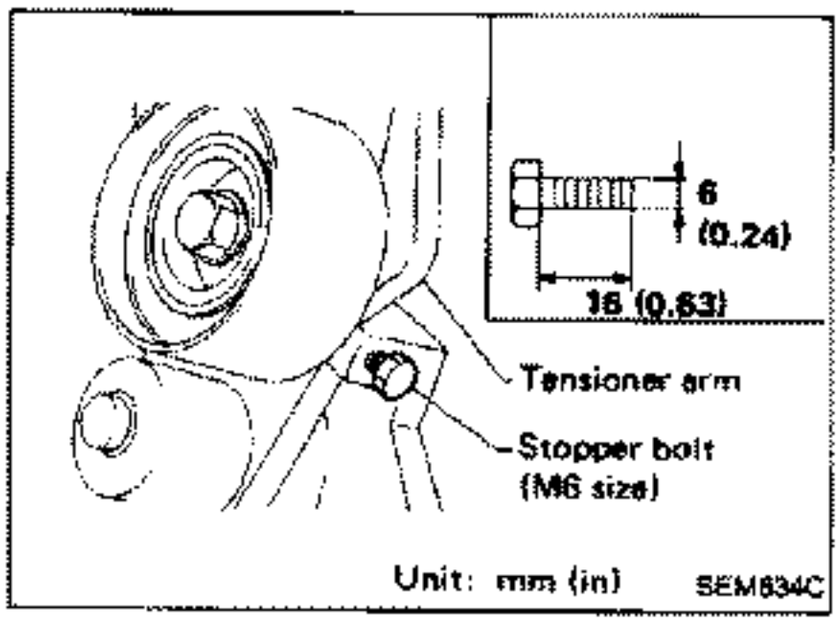

9. Install a suitable stopper bolt into tensioner arm of auto-tensioner so that projection of auto-tensioner pusher does not change.

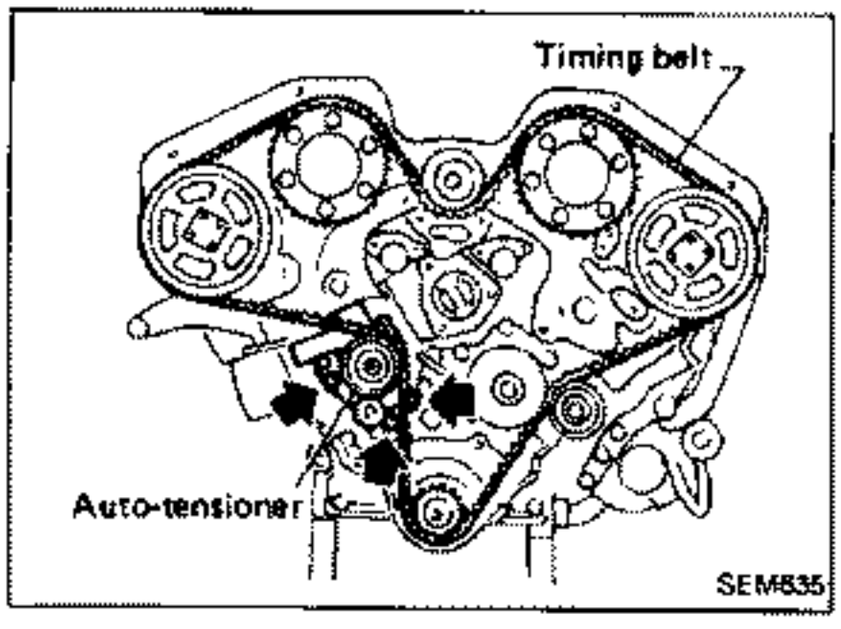

10. Set No. 1 cylinder at T.D.C. on its compression stroke.
11. Remove auto-tensioner and timing belt.

Inspection

Visually check the condition of timing belt.
Replace if any abnormality is found.

Item to check	Problem	Cause
Tooth is broken/ tooth root is cracked.	 SEM394A	• Camshaft jamming • Distributor jamming • Damaged camshaft/crankshaft oil seal
Back surface is cracked/worn.	 SEM395A	• Tensioner jamming • Overheated engine • Interference with belt cover
Side surface is worn.	 • Belt corners are worn and round. • Wicks are frayed and coming out. SEM396A	• Improper installation of belt • Malfunctioning crankshaft pulley plate/timing belt plate
Teeth are worn.	 Rotating direction • Canvas on tooth face is worn down. • Canvas on tooth is fluffy, rubber layer is worn down and faded white, or weft is worn down and invisible. SEM397A	• Poor belt cover sealing • Coolant leakage at water pump • Camshaft not functioning properly • Distributor not functioning properly • Excessive belt tension
Oil/Coolant or water is stuck to belt.		• Poor oil sealing • Coolant leakage at water pump • Poor belt cover sealing

Inspection (Cont'd)

AUTO-TENSIONER

Check for oil leaks from pusher rod and diaphragm.

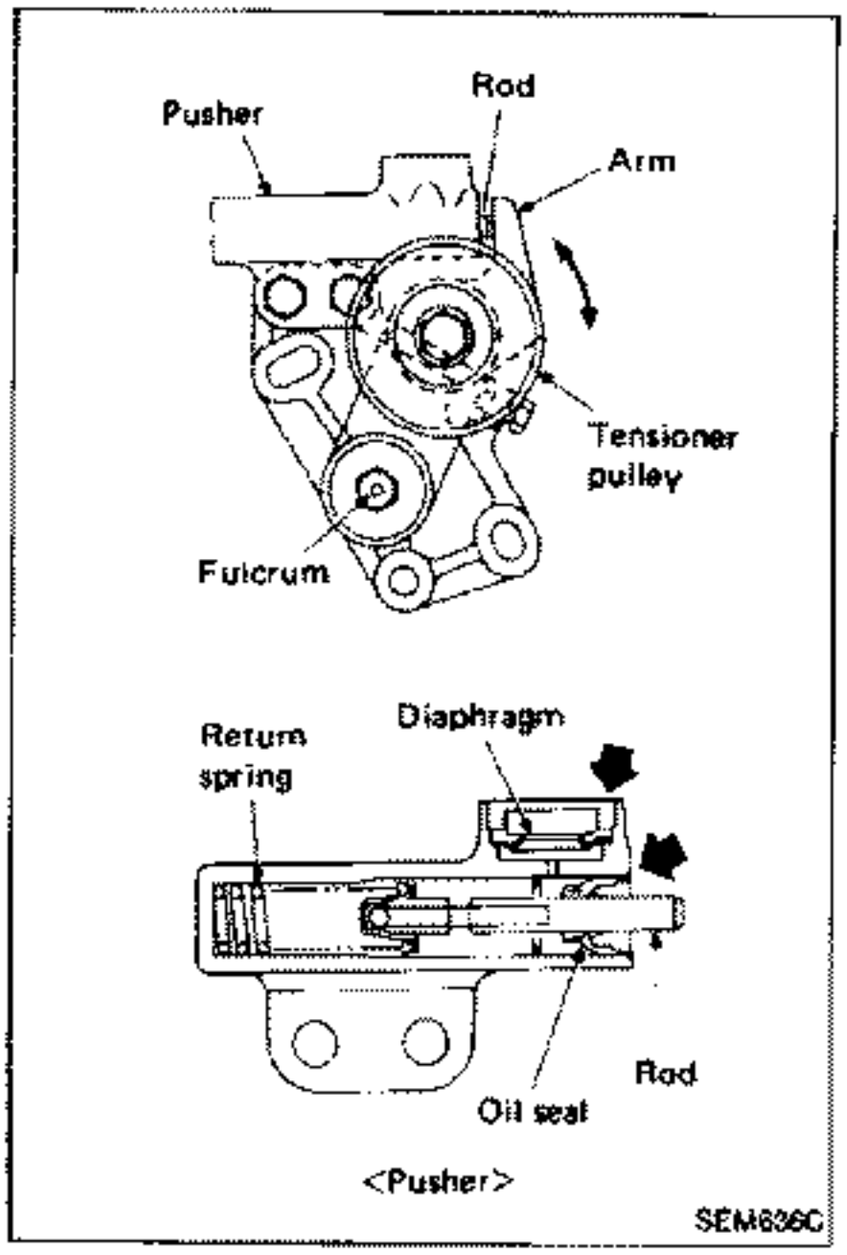

Installation

1. Confirm that No. 1 cylinder is set at T.D.C. on its compression stroke.
2. Align matching marks on camshaft and crankshaft sprockets with aligning marks on rear belt cover and oil pump housing.
3. Remove all spark plugs.

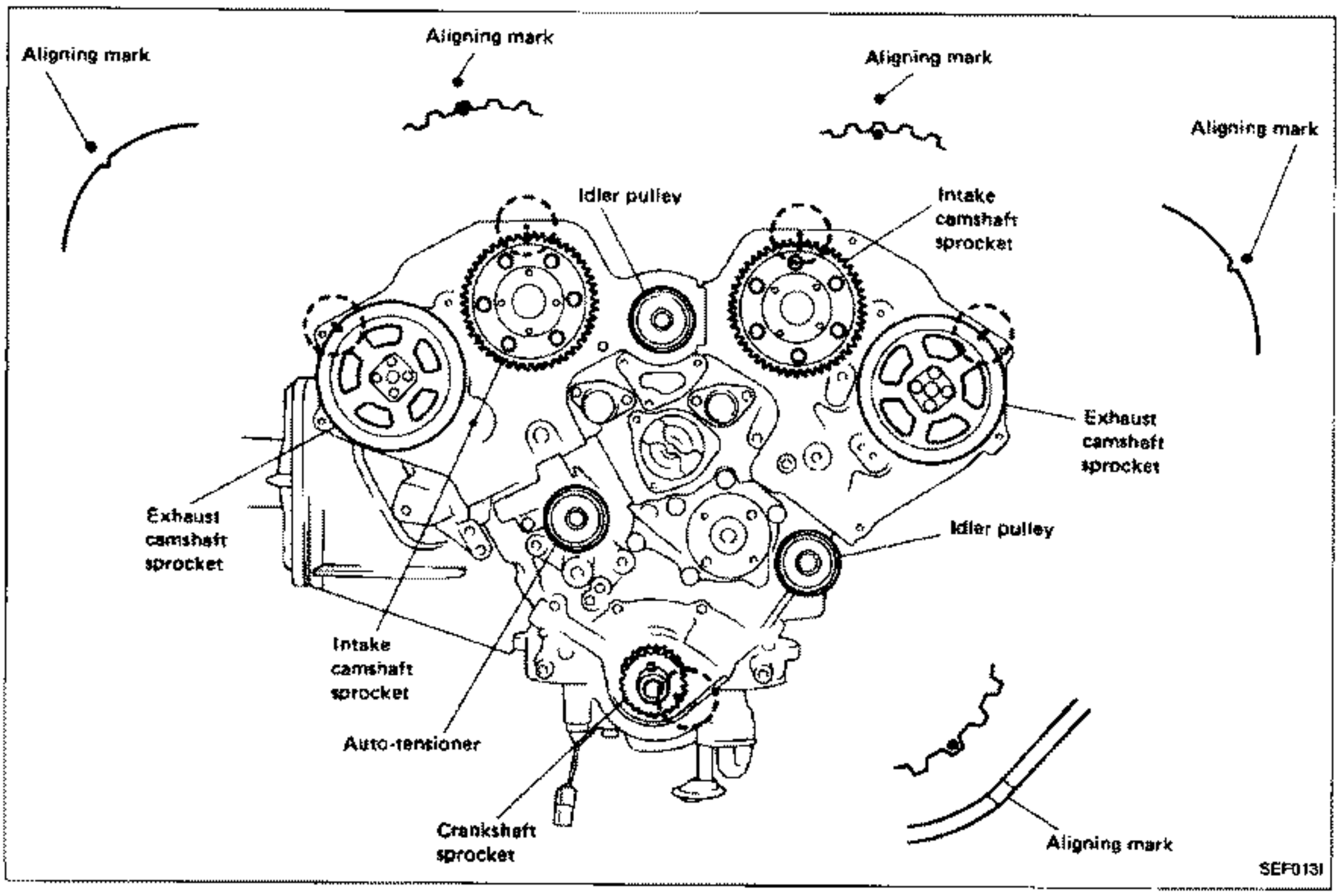

Installation (Cont'd)

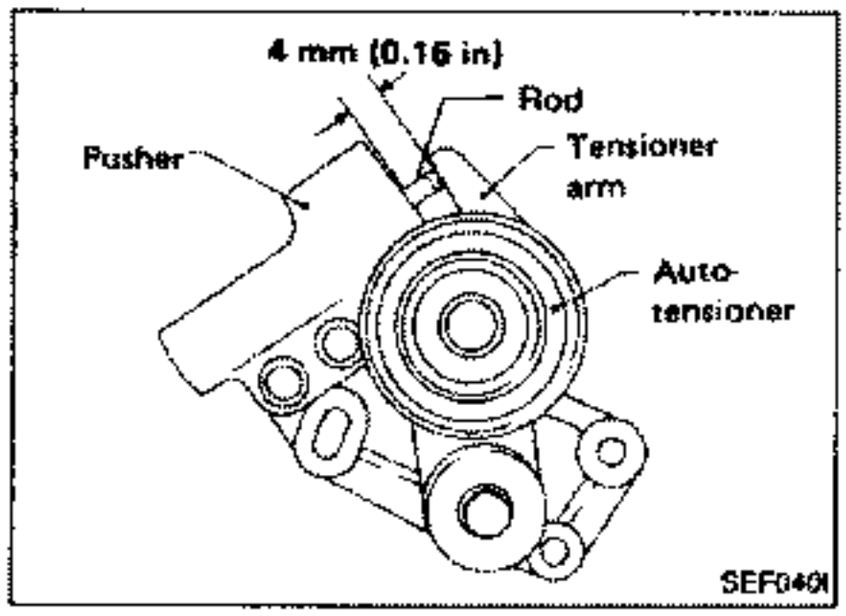

4. Check clearance between tensioner arm and pusher of auto-tensioner is 4 mm (0.16 in).
   If not, adjust it in a suitable vise, and then insert stopper bolt into tensioner arm in order that clearance does not change.

When adjusting clearance, do not push tensioner arm with stopper bolt fitted because it will damage thread portion of stopper bolt.

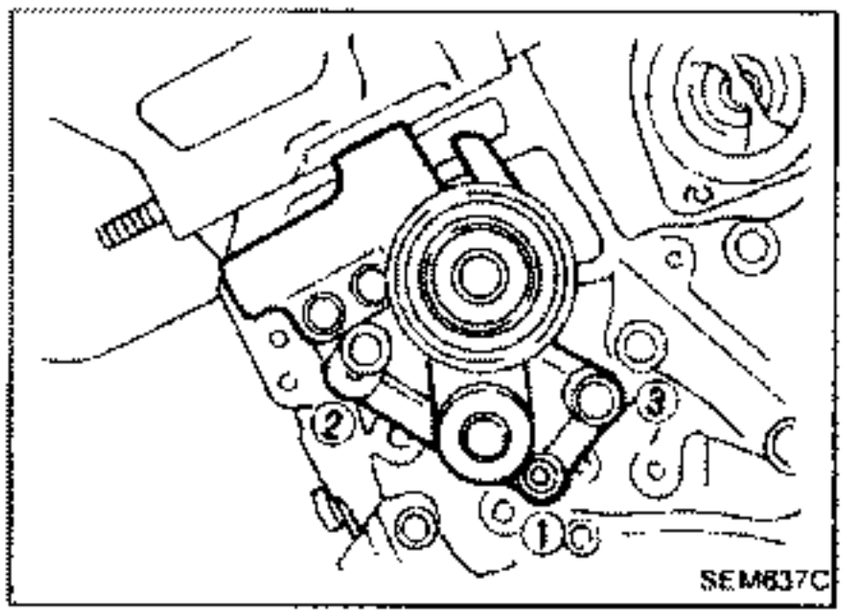

5. Install auto-tensioner and tighten nut (①) and bolts (②, ③) slightly by hand.

6. Set timing belt.

a. Ensure timing belt and sprockets are clean and free from oil or water. Do not bend or twist timing belt.

b. Align white lines on timing belt with matching mark on camshaft sprocket and crankshaft sprocket.

c. Point arrow on timing belt towards the front.

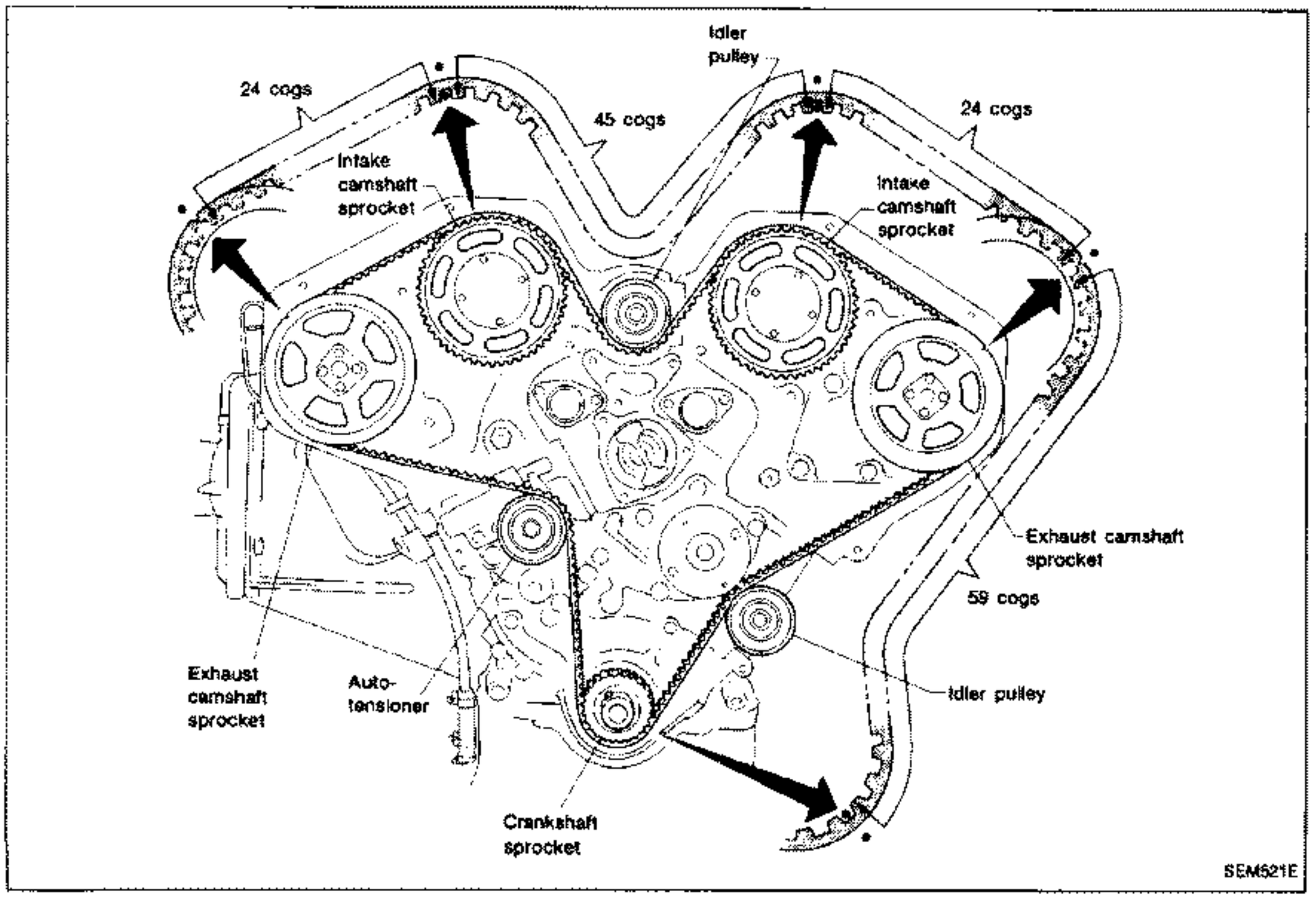

Installation (Cont'd)

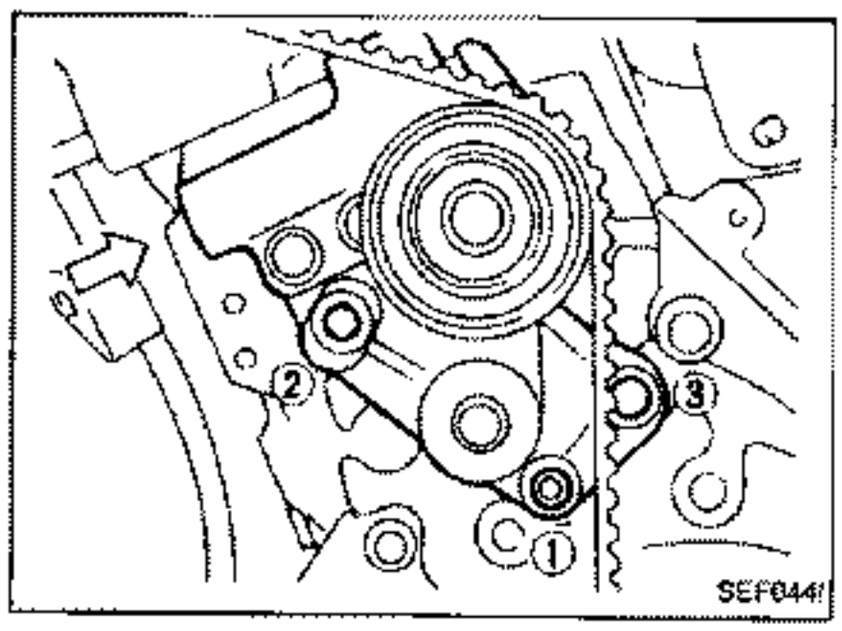

7. Push auto-tensioner slightly towards timing belt to prevent belt from slipping.
   While pushing, turn crankshaft 10 degrees clockwise and tighten nut (①) and bolts (②, ③) to 16 to 21 N·m (1.6 to 2.1 kg-m, 12 to 15 ft-lb).

At this time, do not push auto-tensioner hard or belt will be adjusted too tightly.

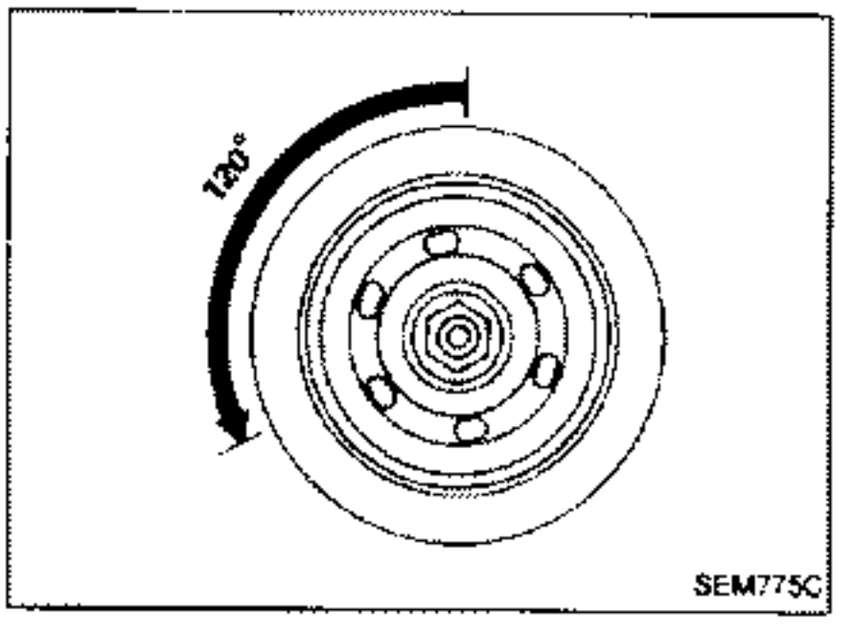

8. Turn crankshaft 120 degrees counterclockwise.
9. Turn crankshaft clockwise and set No. 1 cylinder at T.D.C. on its compression stroke.
10. Loosen nut (①) and bolts (②, ③) 1/2 turn.

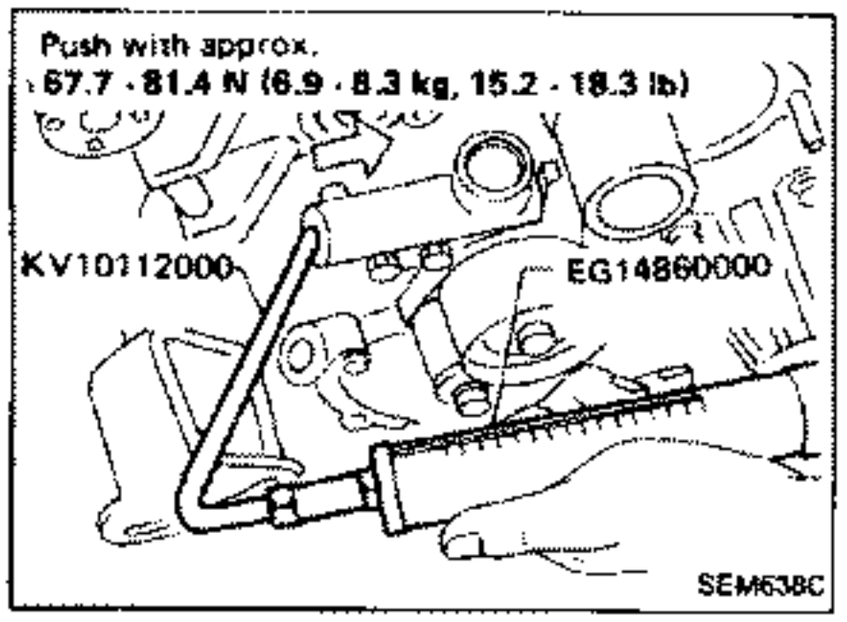

11. Push the end of pusher with approx. 67.7 to 81.4 N (6.9 to 8.3 kg, 15.2 to 18.3 lb) force using Tool (push-pull gauge) and tighten nut (①) and bolts (②, ③) to 16 to 21 N·m (1.6 to 2.1 kg-m, 12 to 15 ft-lb).

If deflection of timing belt exceeds specification in procedure 15., change applied pushing force.

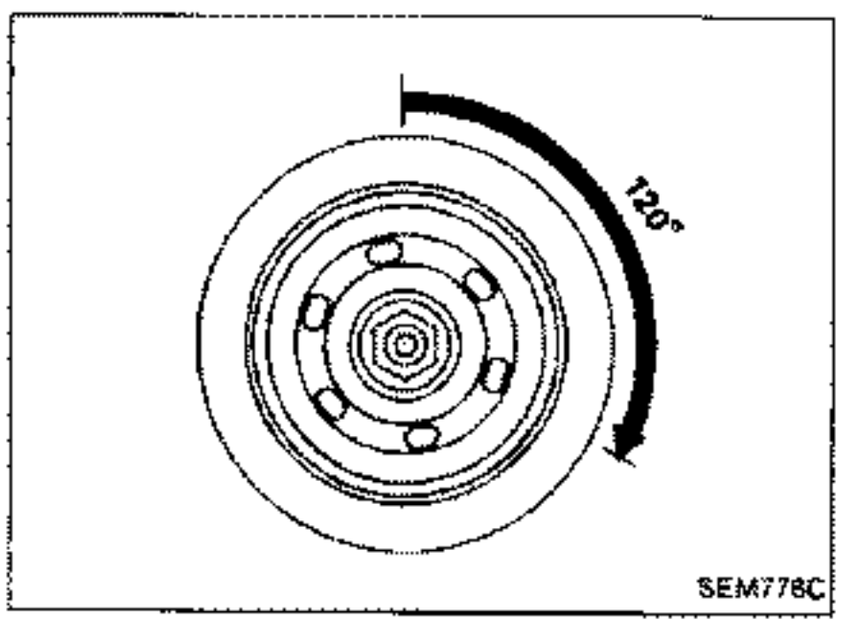

12. Turn crankshaft 120 degrees clockwise.
13. Turn crankshaft 120 degrees counterclockwise and set No. 1 cylinder at T.D.C. on its compression stroke.

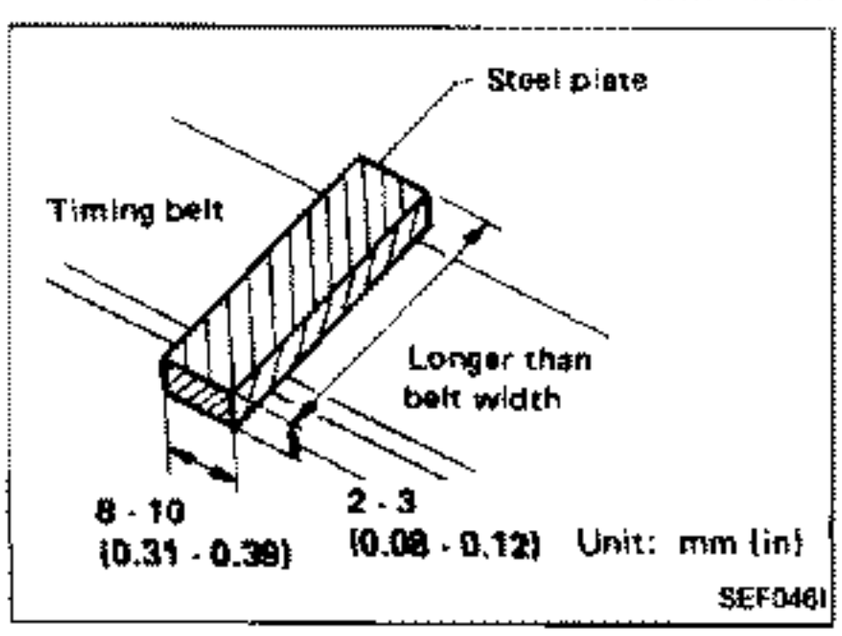

14. Prepare a suitable steel plate as shown.

Installation (Cont'd)

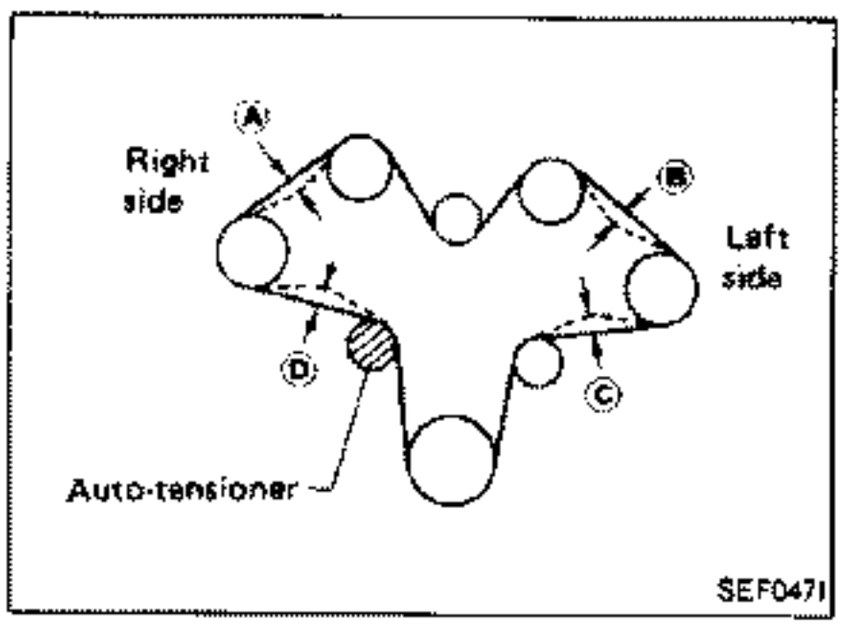

15.
(1) Set plate on each position of timing belt mid-way between pulleys as shown.
(2) Push it with 49 N (5 kg, 11 lb) force using Tool (push-pull gauge) and check deflections.

Deflection:

5.5 - 6.5 mm (0.217 - 0.256 in) or the average of each portion

$$\frac{Ⓐ + Ⓑ + Ⓒ + Ⓓ}{4}$$

is 5.5 - 6.5 mm (0.217 - 0.256 in)

If not within specification, repeat procedure from step 7 through step 15.

16. Confirm auto-tensioner fixing nuts and bolts are tightened to 16 to 21 N·m (1.6 to 2.1 kg-m, 12 to 15 ft-lb).

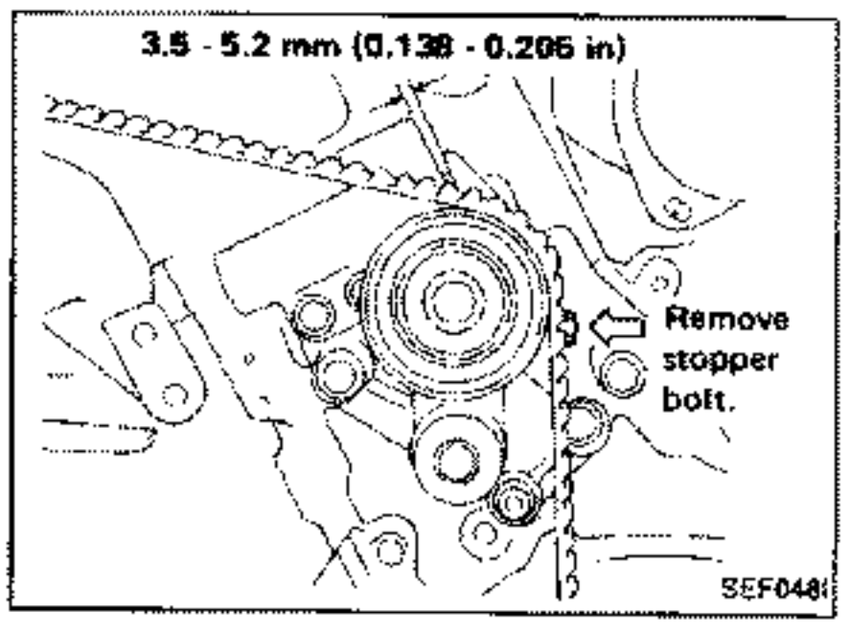

17.
- Remove the auto-tensioner stopper bolt.
- After 5 minutes check the projection of the rod (clearance between tensioner arm and pusher) stays at 3.5 to 5.2 mm (0.138 to 0.205 in).

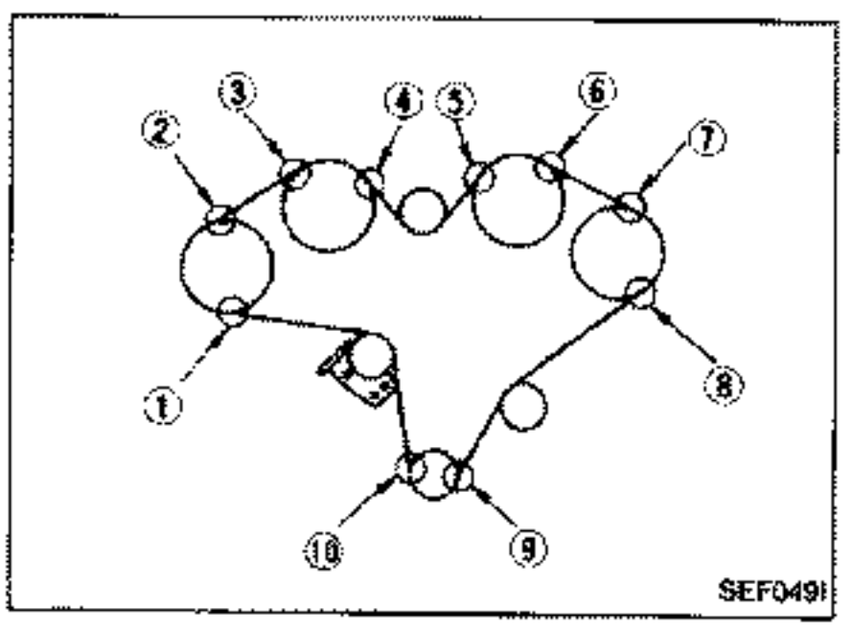

18. Check the proper installation (no slip or misplacement) of timing belt at each position as shown.

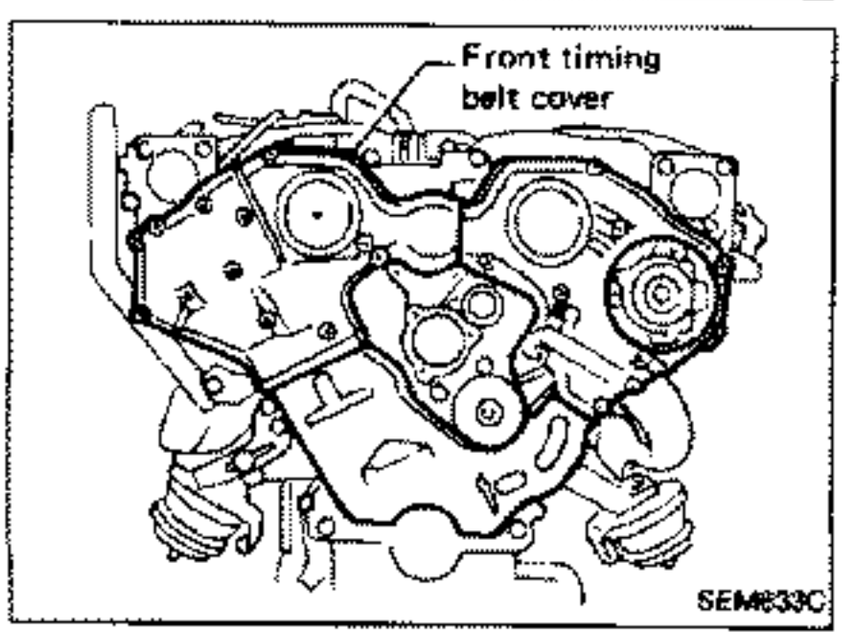

19. Install timing belt covers.

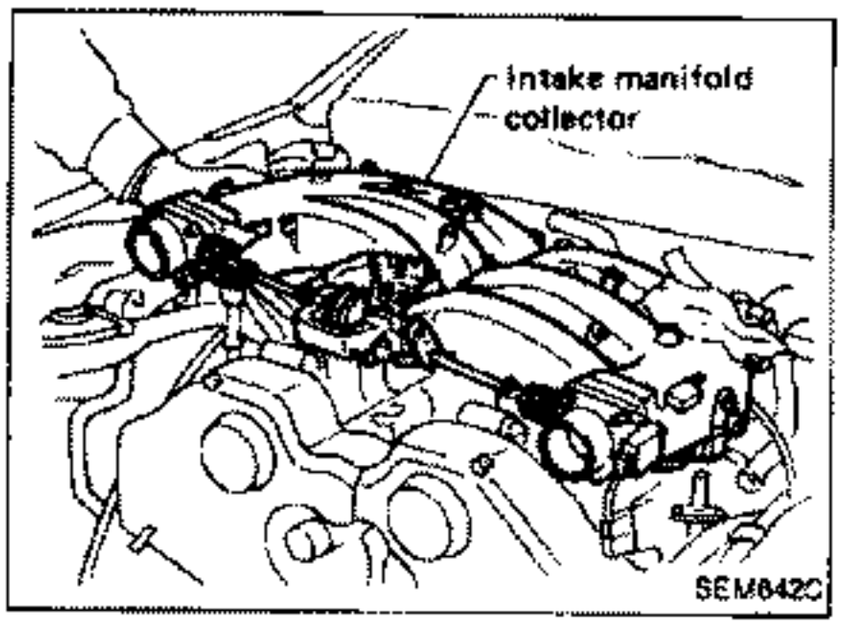

VALVE OIL SEAL

1. Remove intake manifold collector and valve cover.
2. Remove timing belt, camshaft sprocket and rear belt cover.
3. Remove camshaft brackets, camshaft and valve lifter.

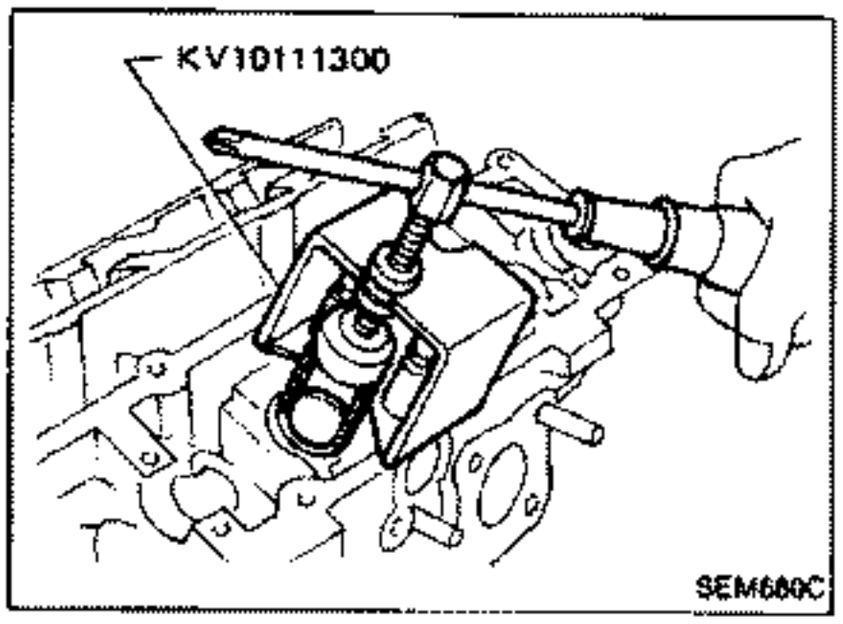

4. Remove valve spring using Tool or a suitable tool.
- Piston concerned should be set at T.D.C. to prevent valve from falling.
5. Pry out valve oil seal.

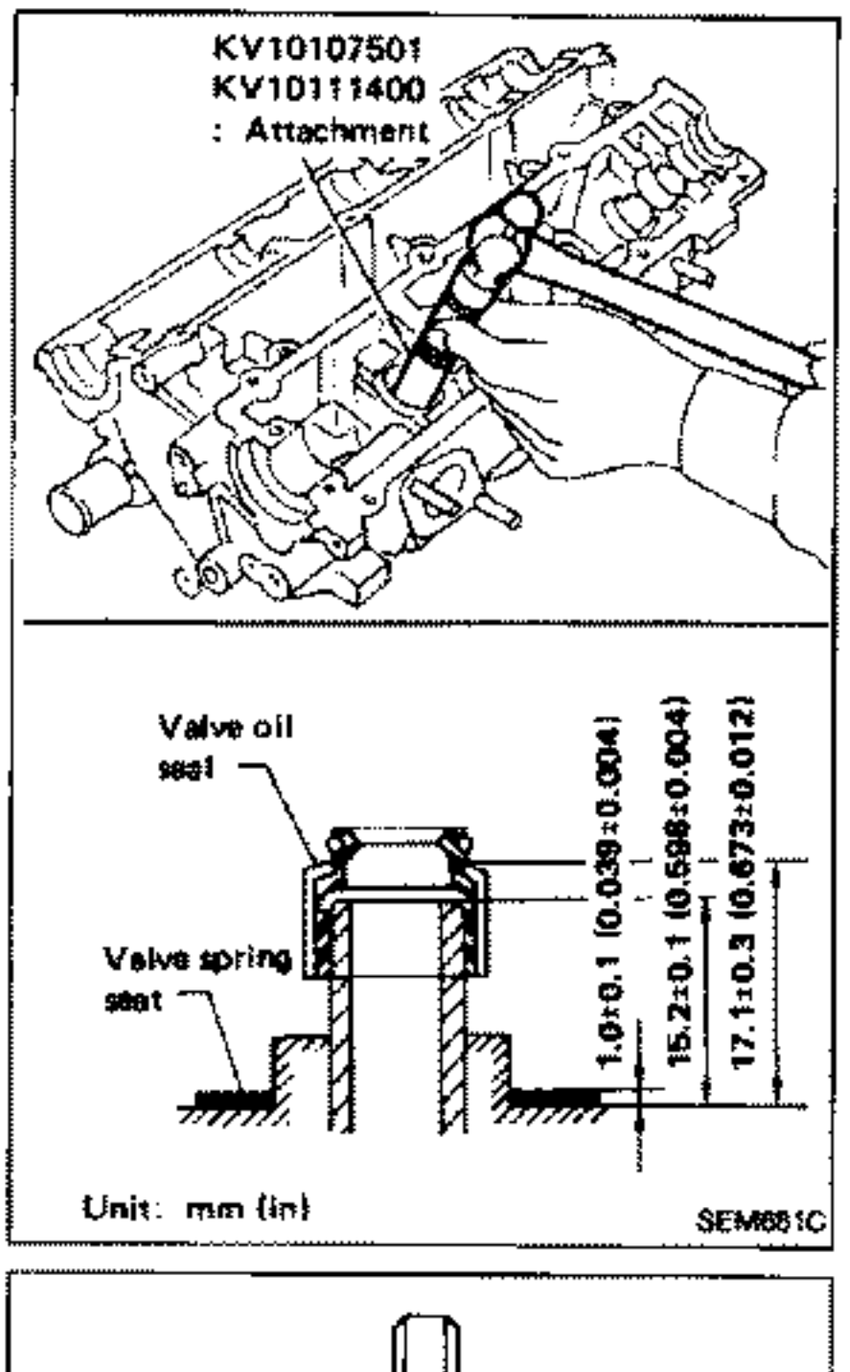

6. Apply engine oil to new valve oil seal and install it.
- Before installing valve oil seal, install inner valve spring seat.

OIL SEAL INSTALLATION DIRECTION

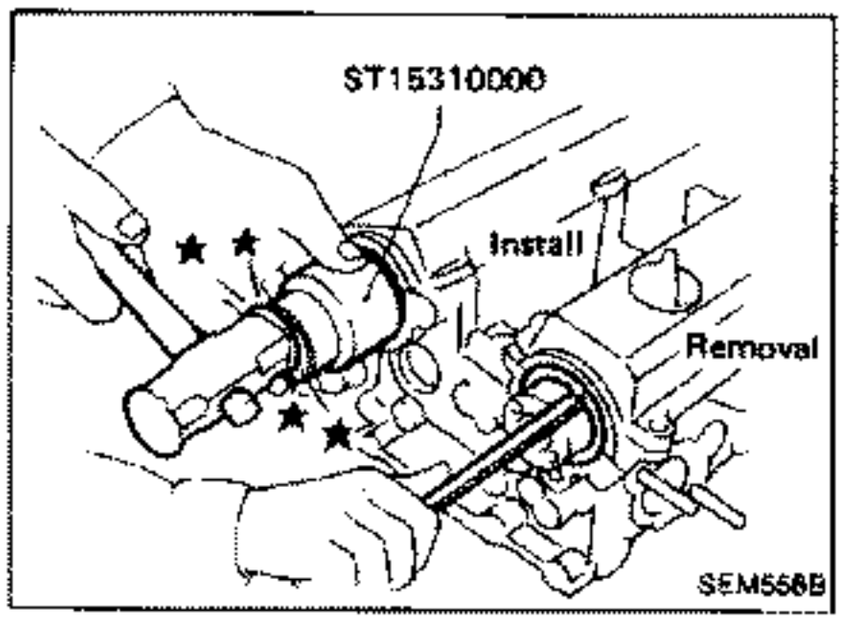

CAMSHAFT OIL SEAL

1. Remove timing belt and camshaft sprocket.
2. Remove rear belt cover and camshaft oil seal.

Be careful not to scratch camshaft.

3. Apply engine oil to new camshaft oil seal and install it using Tool or a suitable tool.

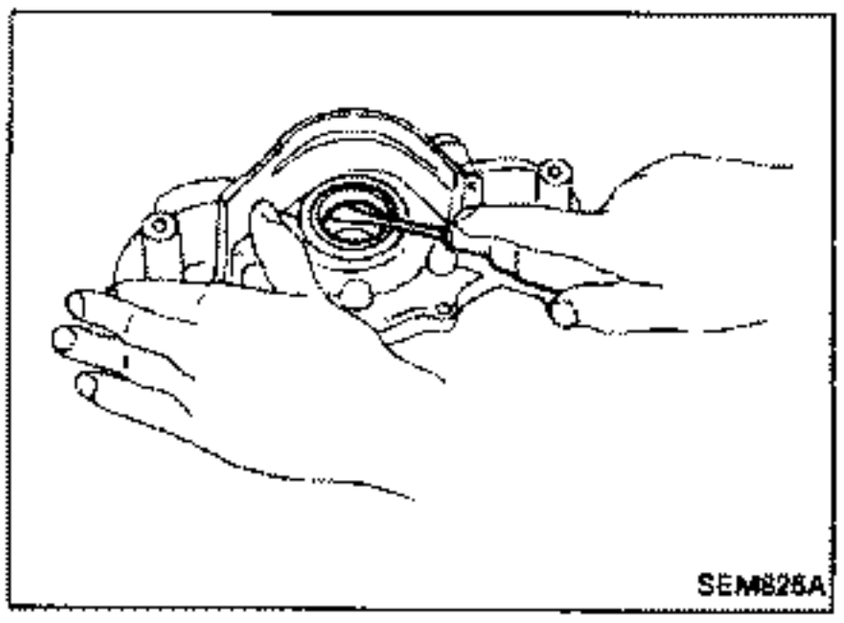

FRONT OIL SEAL

1. Remove timing belt and crankshaft sprocket.
2. Remove oil pan and oil pump assembly.
3. Remove front oil seal from oil pump body.

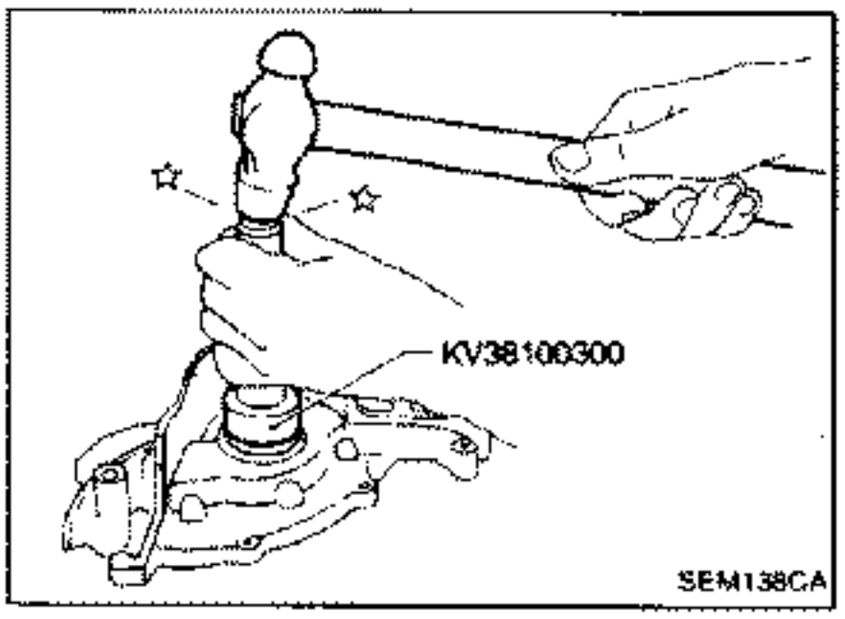

4. Apply engine oil to new oil seal and install it using Tool or a suitable tool.

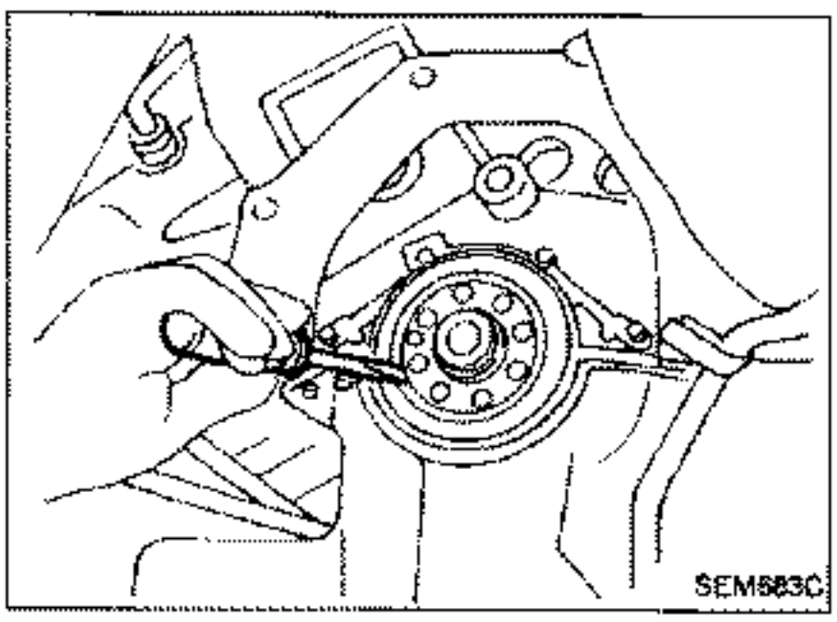

REAR OIL SEAL

1. Remove flywheel or drive plate.
2. Remove rear oil seal from retainer.

Be careful not to scratch crankshaft.

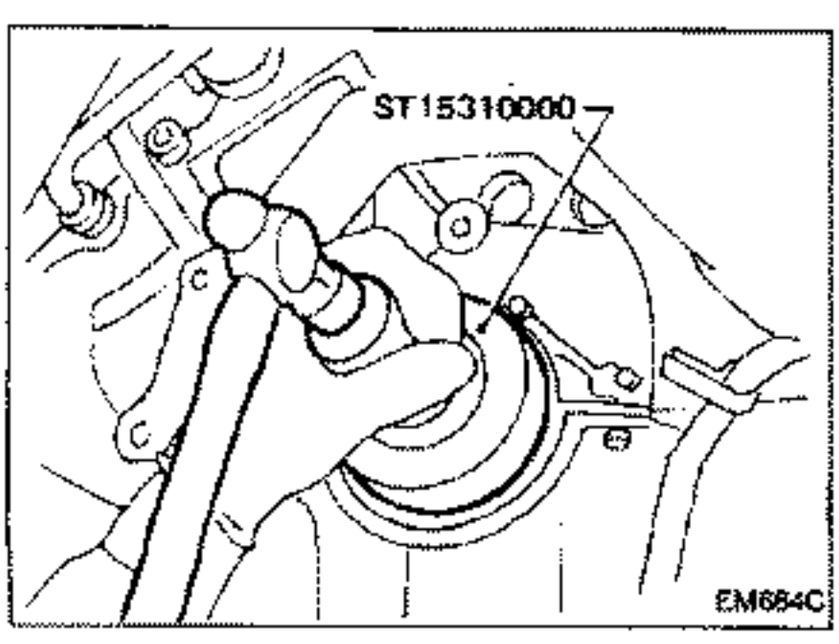

3. Apply engine oil to new oil seal and install it using Tool or a suitable tool.

Installation

The intention of this installation and adjustment procedure is to assure accurate synchronization of the throttle chamber opening points.

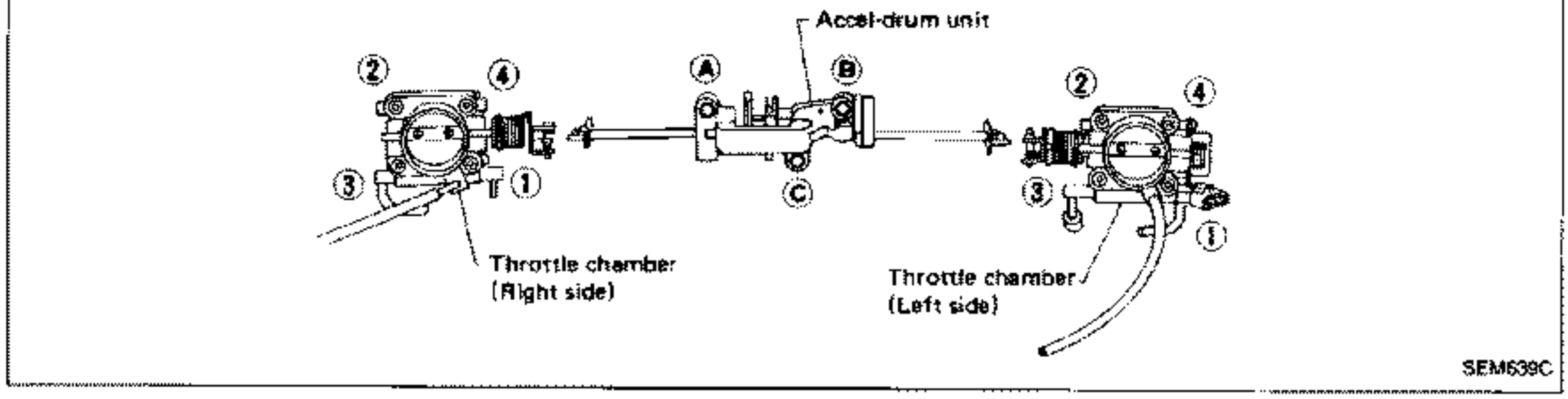

1. Install accel-drum unit and throttle chambers (right side and left side).

   Tightening order:

   (1) ① → ② → ③ → ④:
   9 - 11 N·m (0.9 - 1.1 kg-m, 6.5 - 8.0 ft-lb)

   (2) ① → ② → ③ → ④:
   18 - 22 N·m (1.8 - 2.2 kg-m, 13 - 16 ft-lb)

   (3) Ⓐ → Ⓑ → Ⓒ: Tighten by hand

   (4) Ⓐ → Ⓑ → Ⓒ:
   5 N·m (0.5 kg-m, 3.6 ft-lb)

   (5) Ⓐ → Ⓑ → Ⓒ:
   20 N·m (2.0 kg-m, 14 ft-lb)

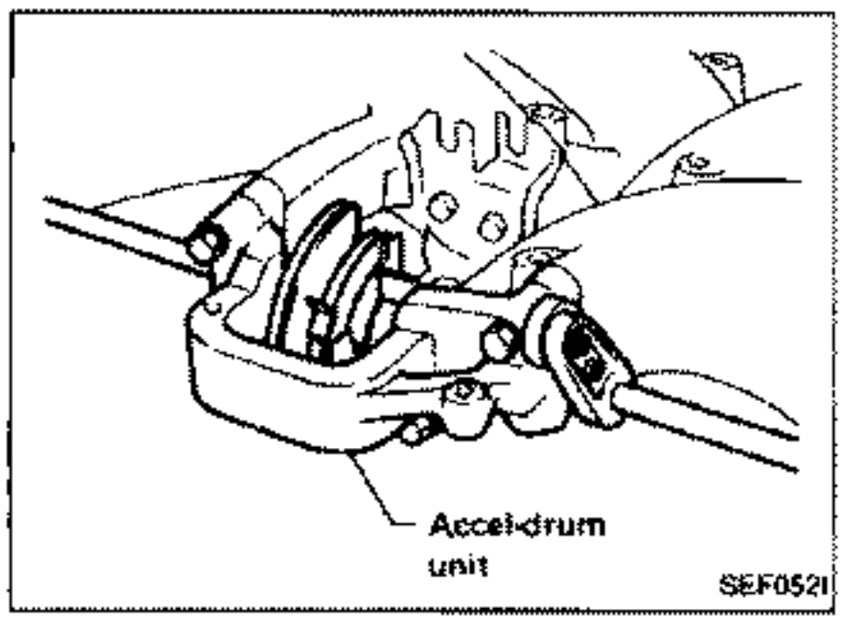

- **When tightening bolts, free accel-drum unit so that drum unit is left under its own weight. Do not apply external force to accel-drum unit.**
- **When replacing throttle chambers only, you need not perform procedures (3), (4) and (5).**

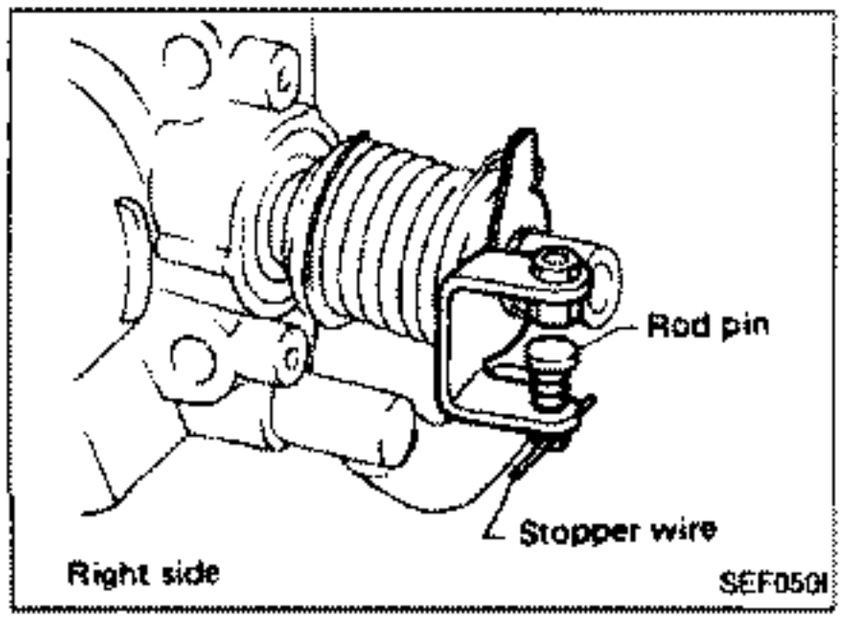

- **Before installing each throttle chamber, confirm that stopper wire is installed in hole of rod pin.**
  If not, install suitable wire.

Installation (Cont'd)

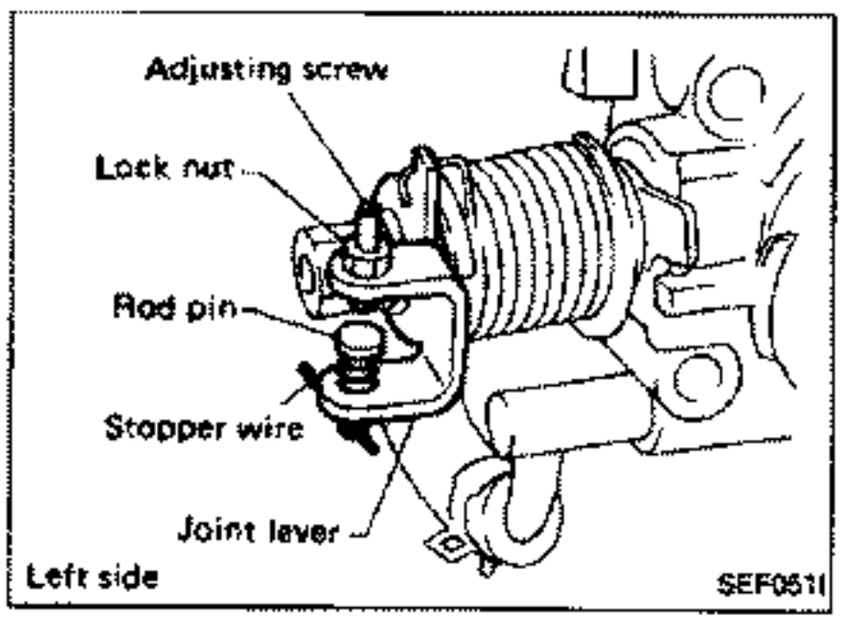

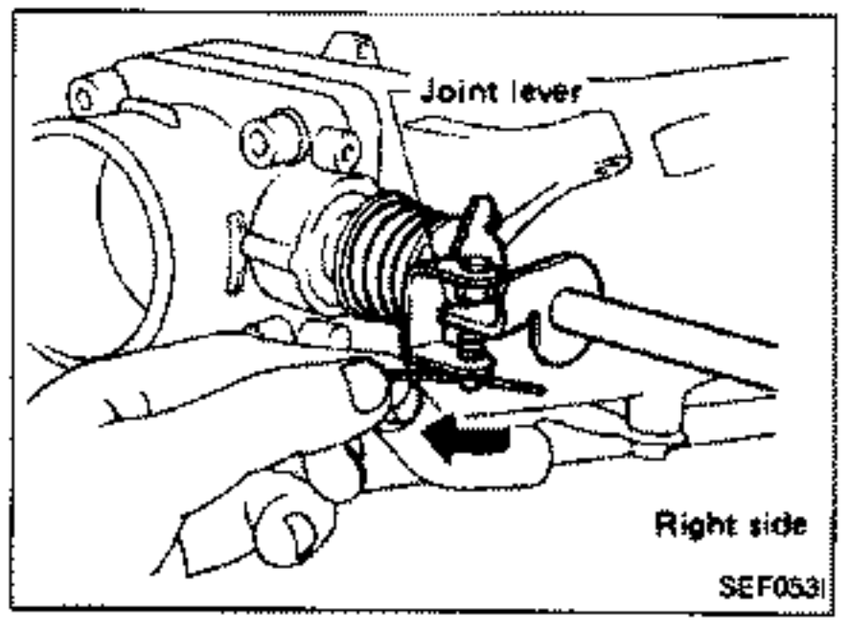

2. Pull out stopper wire of right side throttle chamber in order to secure right side joint lever.

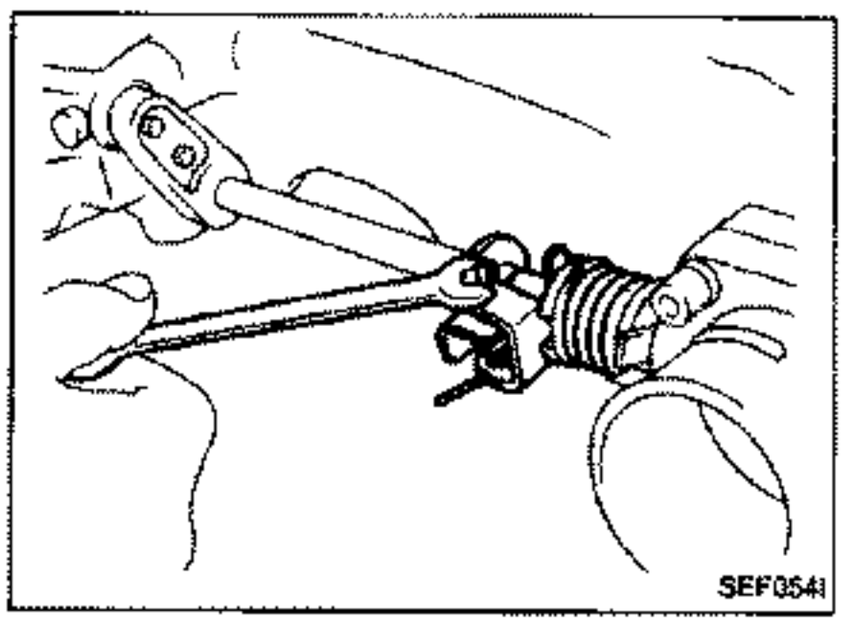

3. Loosen left side throttle chamber lock nut and back off adjusting screw until there is clearance between the screw and joint lever.

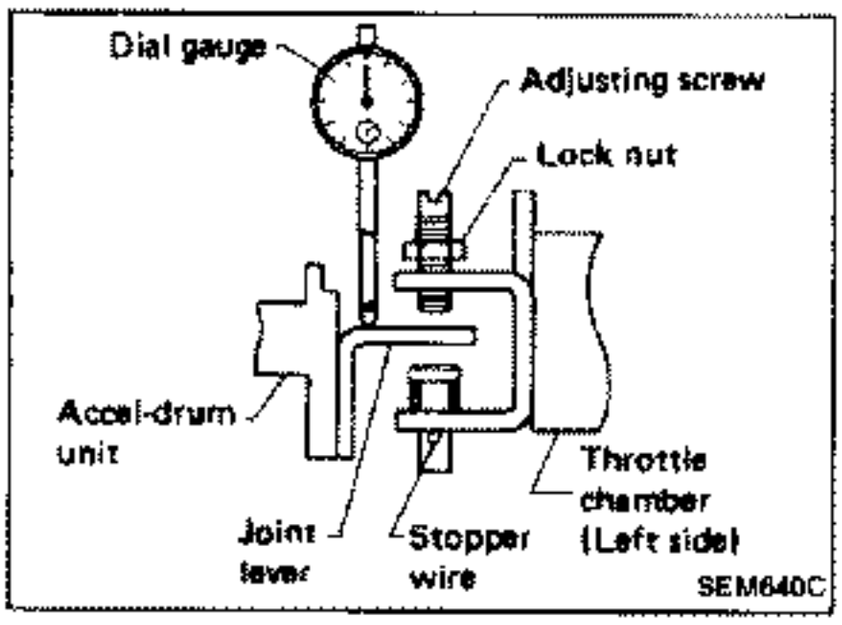

4. Set dial gauge on joint lever and set indicator to zero. Confirm that bottom end of adjusting screw is not in contact with joint lever of accelerator drum unit.

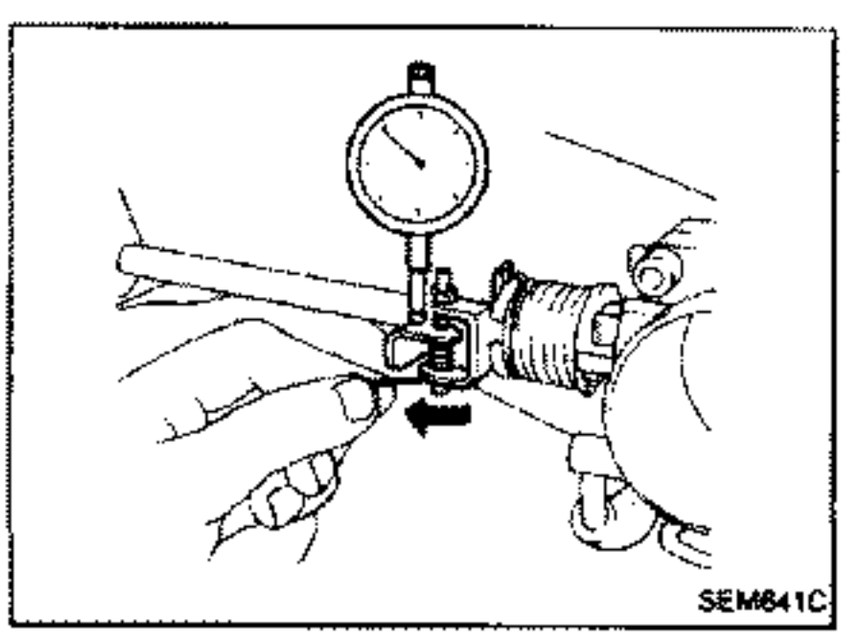

5. Pull out left side throttle chamber stopper wire from rod pin.

Installation (Cont'd)

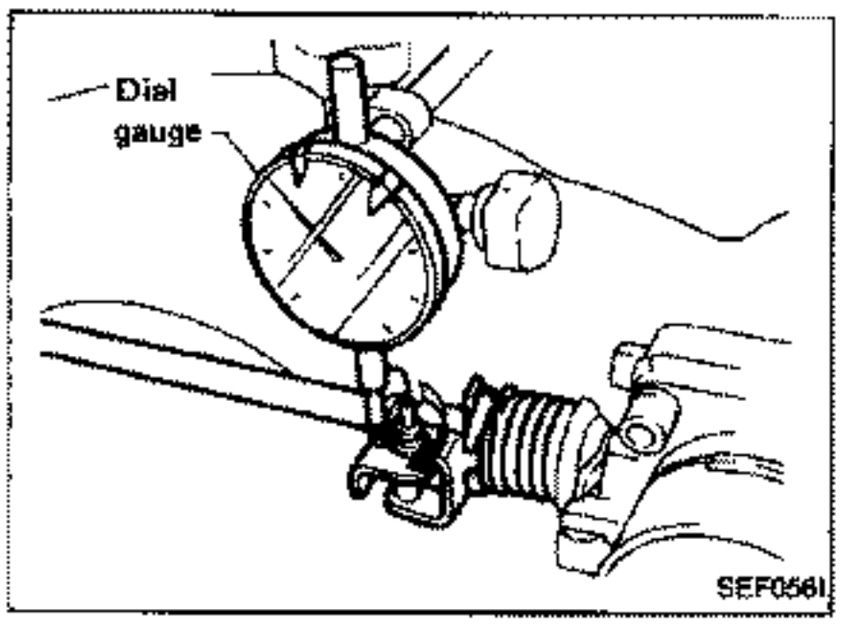

6. Turn adjusting screw until dial gauge indicator is within the following range.

   Range: 0.07 - 0.13 mm (0.0028 - 0.0051 in)

Then tighten lock nut.

7. Confirm that the dial gauge indicator is still within the above range.

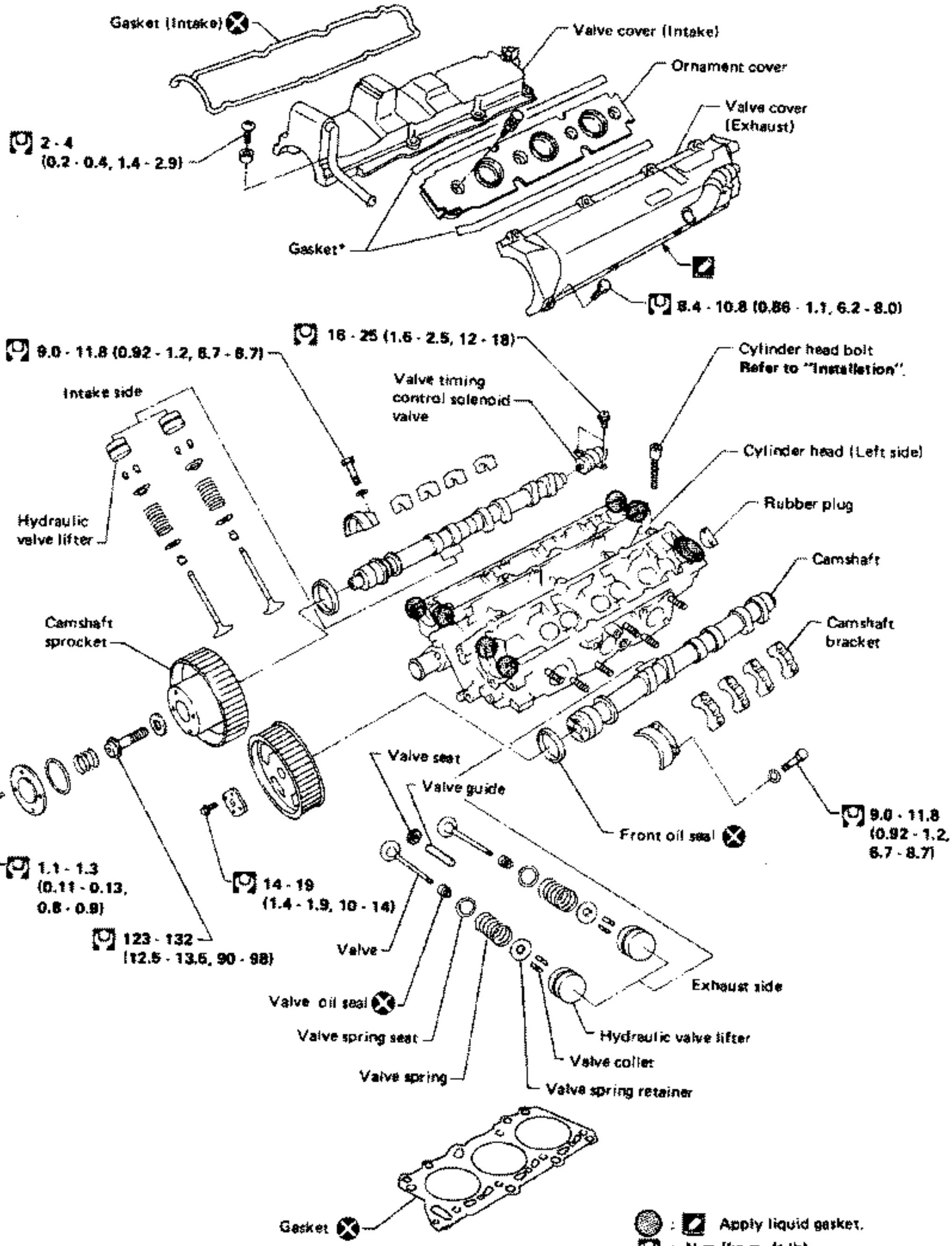
Gasket (Intake)
Valve cover (Intake)
Ornament cover
Valve cover (Exhaust)
2 - 4 (0.2 - 0.4, 1.4 - 2.9)
Gasket*
8.4 - 10.8 (0.86 - 1.1, 6.2 - 8.0)
16 - 25 (1.6 - 2.5, 12 - 18)
9.0 - 11.8 (0.92 - 1.2, 6.7 - 8.7)
Cylinder head bolt
Refer to "Installation".
Intake side
Valve timing control solenoid valve
Cylinder head (Left side)
Hydraulic valve lifter
Rubber plug
Camshaft
Camshaft sprocket
Camshaft bracket
Valve seat
Valve guide
Front oil seal
9.0 - 11.8 (0.92 - 1.2, 6.7 - 8.7)
1.1 - 1.3 (0.11 - 0.13, 0.8 - 0.9)
14 - 19 (1.4 - 1.9, 10 - 14)
123 - 132 (12.5 - 13.5, 90 - 98)
Valve
Valve oil seal
Valve spring seat
Valve spring
Exhaust side
Hydraulic valve lifter
Valve collet
Valve spring retainer
Gasket
: Apply liquid gasket.
: N·m (kg·m, ft·lb)
* : After installing gasket, cut off any loose ends.

SEM620C

CAUTION:

- **When installing sliding parts such as camshaft, camshaft bracket and oil seal, be sure to apply new engine oil on their sliding surfaces.**
- **When tightening cylinder head bolts, intake camshaft sprocket bolts and camshaft bracket bolts, apply new engine oil to thread portions and seat surfaces of bolts.**
- **Before removing camshaft brackets, identify each one with a punch mark so that they may be reinstalled in their original positions.**

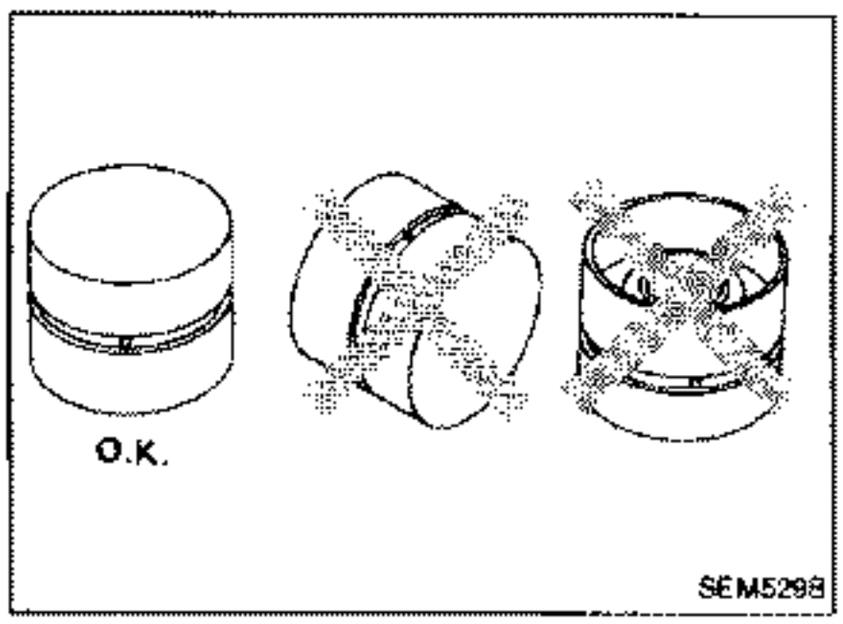

- **Do not put hydraulic valve lifters upside down, otherwise air will enter valve lifter, causing it to make a noise.**
- **Do not disassemble hydraulic valve lifter.**
- **Attach tags to valve lifters so as not to mix them up.**
- **Valve lifters should be immersed in engine oil.**

Removal

1. Remove intake manifold collector.

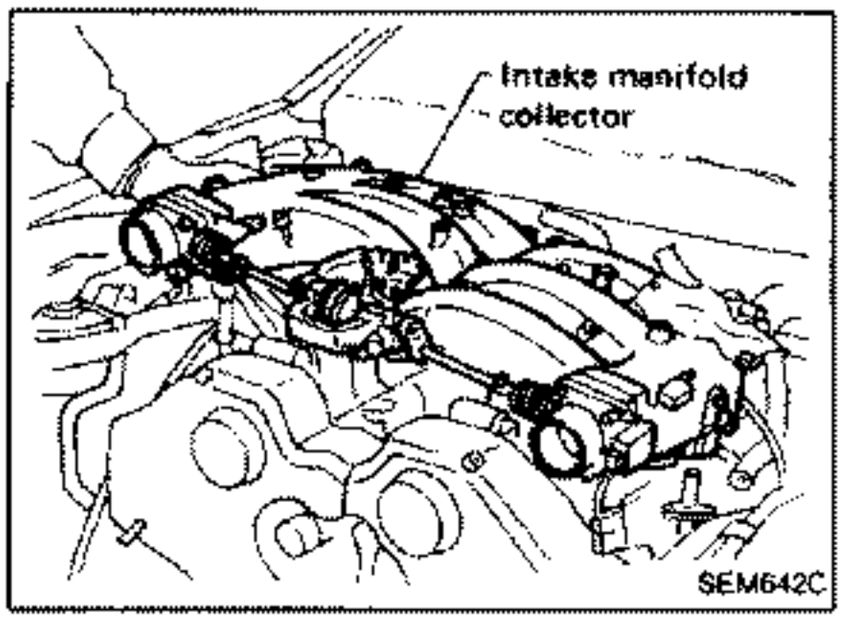

2. Remove injector pipe assembly.

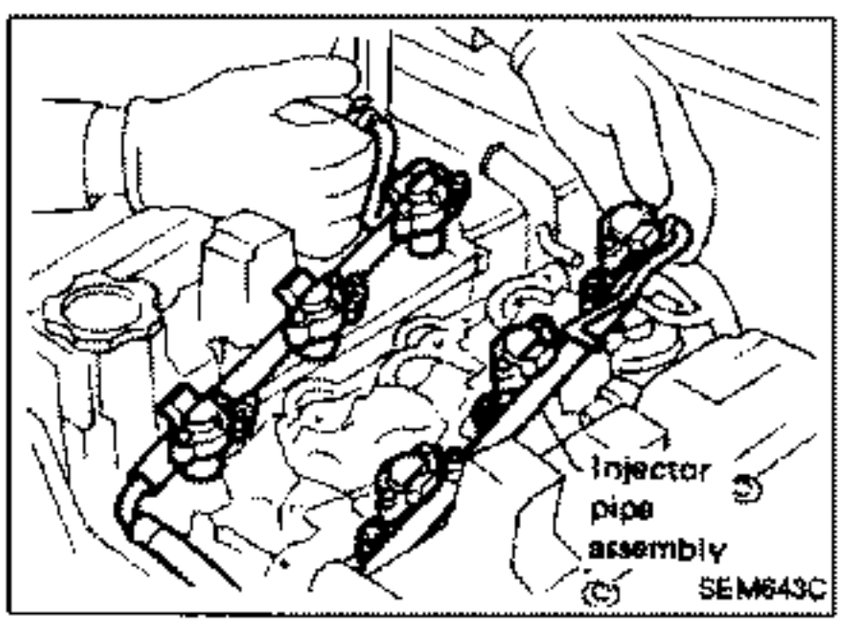

3. Remove valve covers.

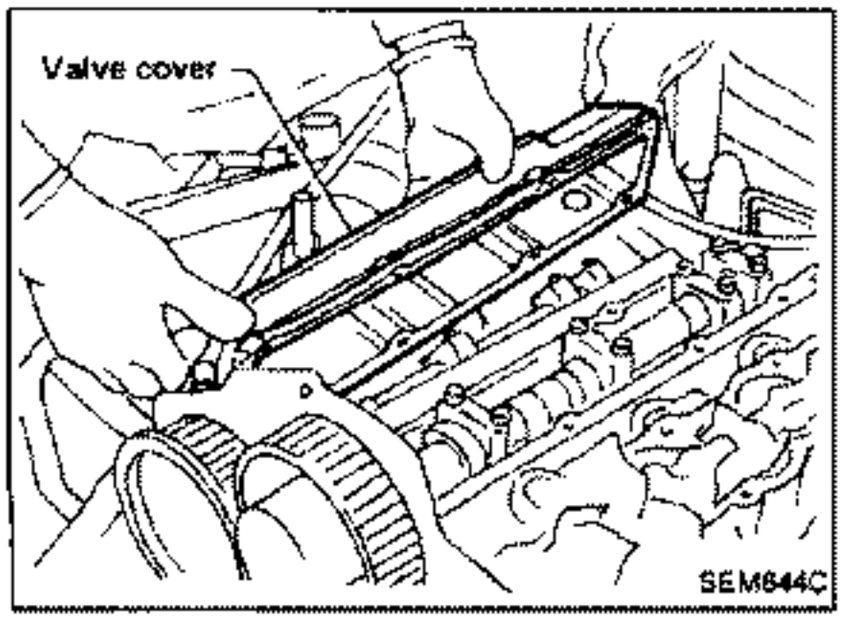

Removal (Cont'd)

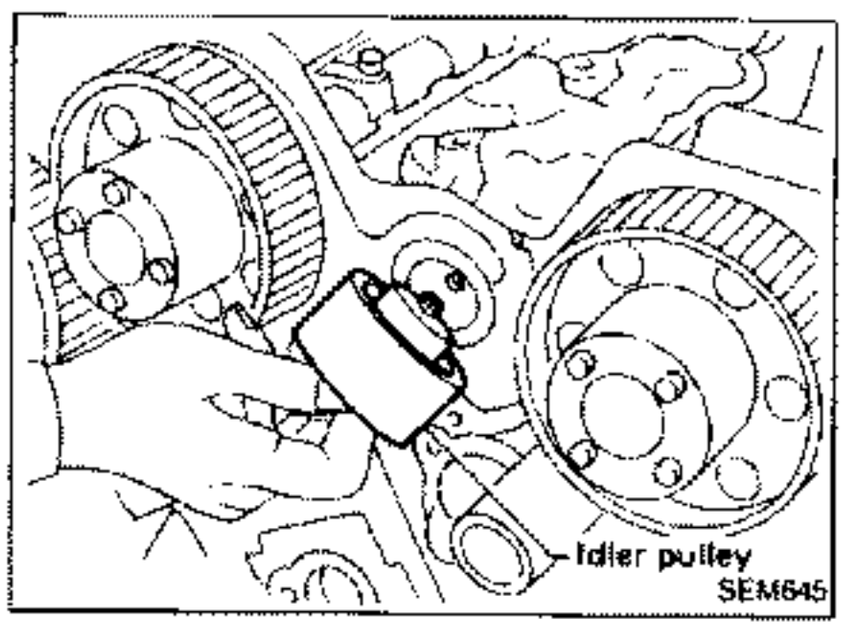

4. Remove timing belt.

Refer to "Removal" of TIMING BELT.

5. Remove idler pulley and its stud bolt.

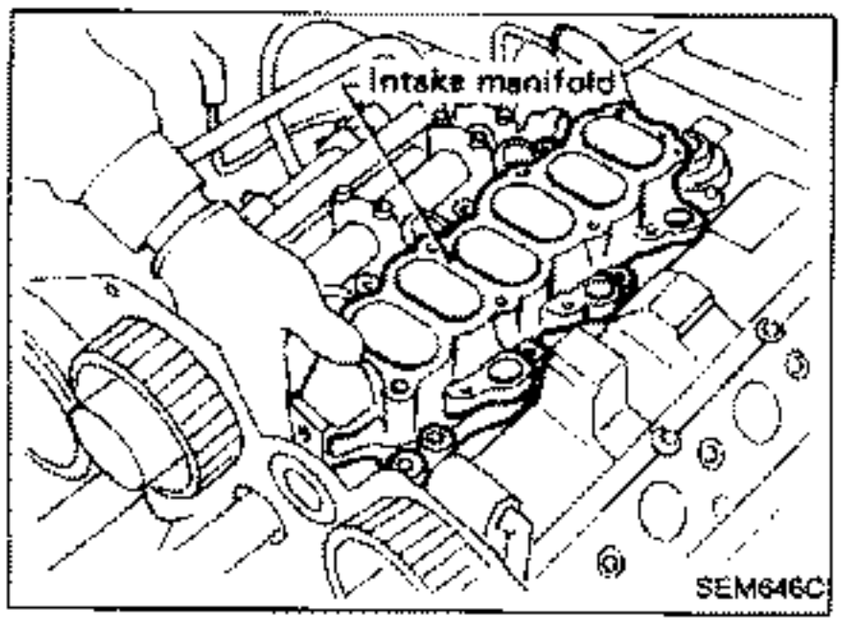

6. Remove intake manifold.

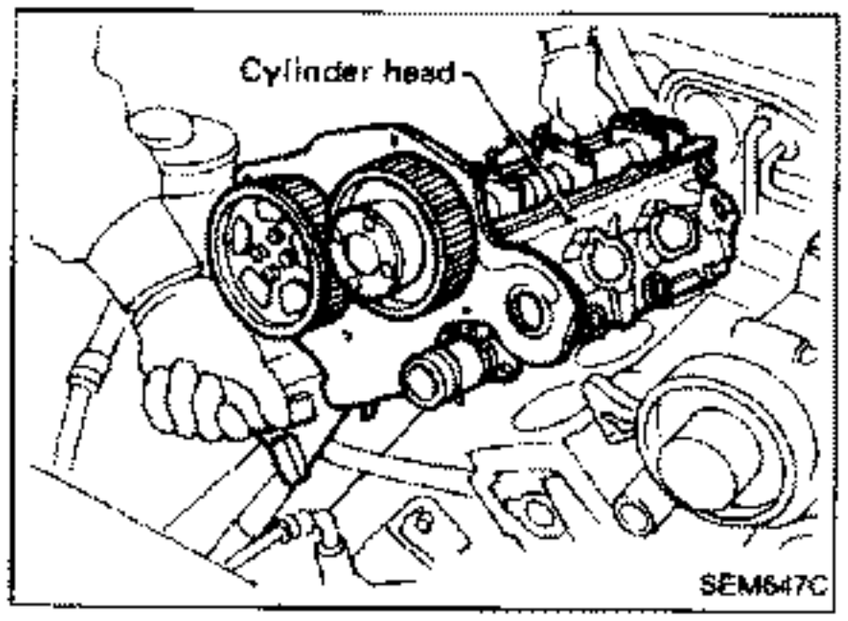

7. Disconnect front exhaust tube from exhaust manifold.
8. Remove cylinder head with exhaust manifold.

Cylinder head bolts should be loosened in two or three steps.

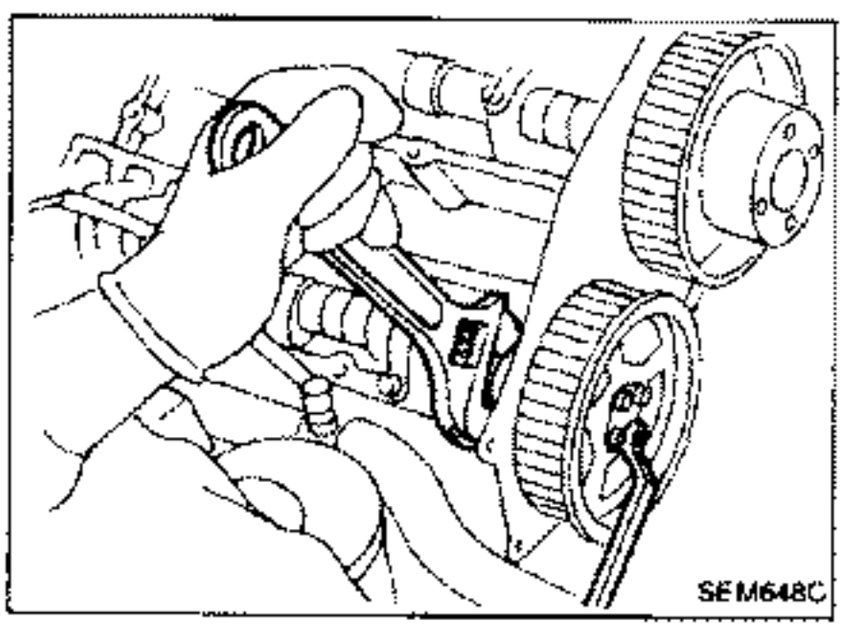

Disassembly

1. Remove exhaust manifold from cylinder head.
2. Remove camshaft sprockets.
3. Remove timing belt rear cover.

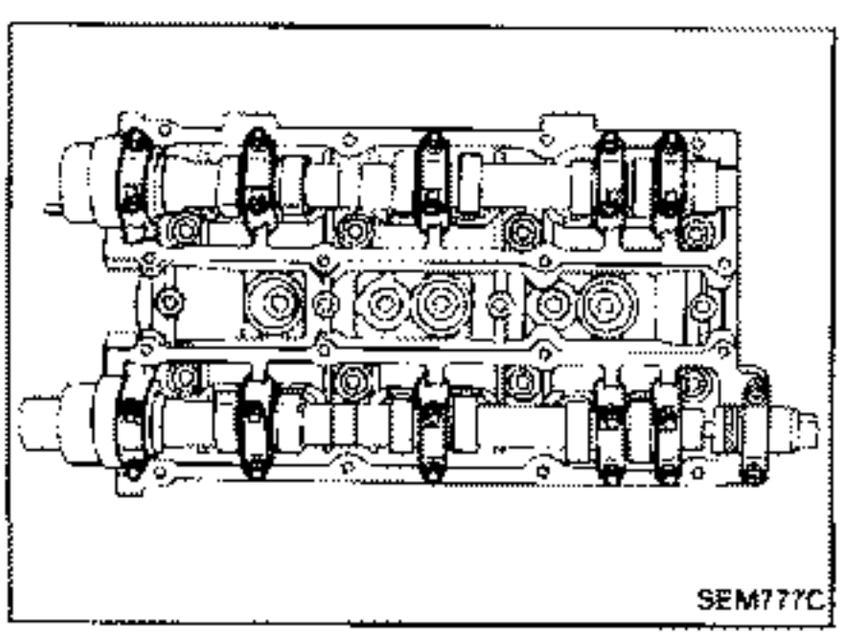

4. Punch an identification mark on each camshaft bracket.
5. Remove camshaft brackets.

Bolts should be loosened in two or three steps.
Before removing camshaft, measure camshaft end play.

6. Remove oil seals, camshafts and hydraulic valve lifters.

Disassembly (Cont'd)

7. Remove valve springs with Tool or a suitable tool.

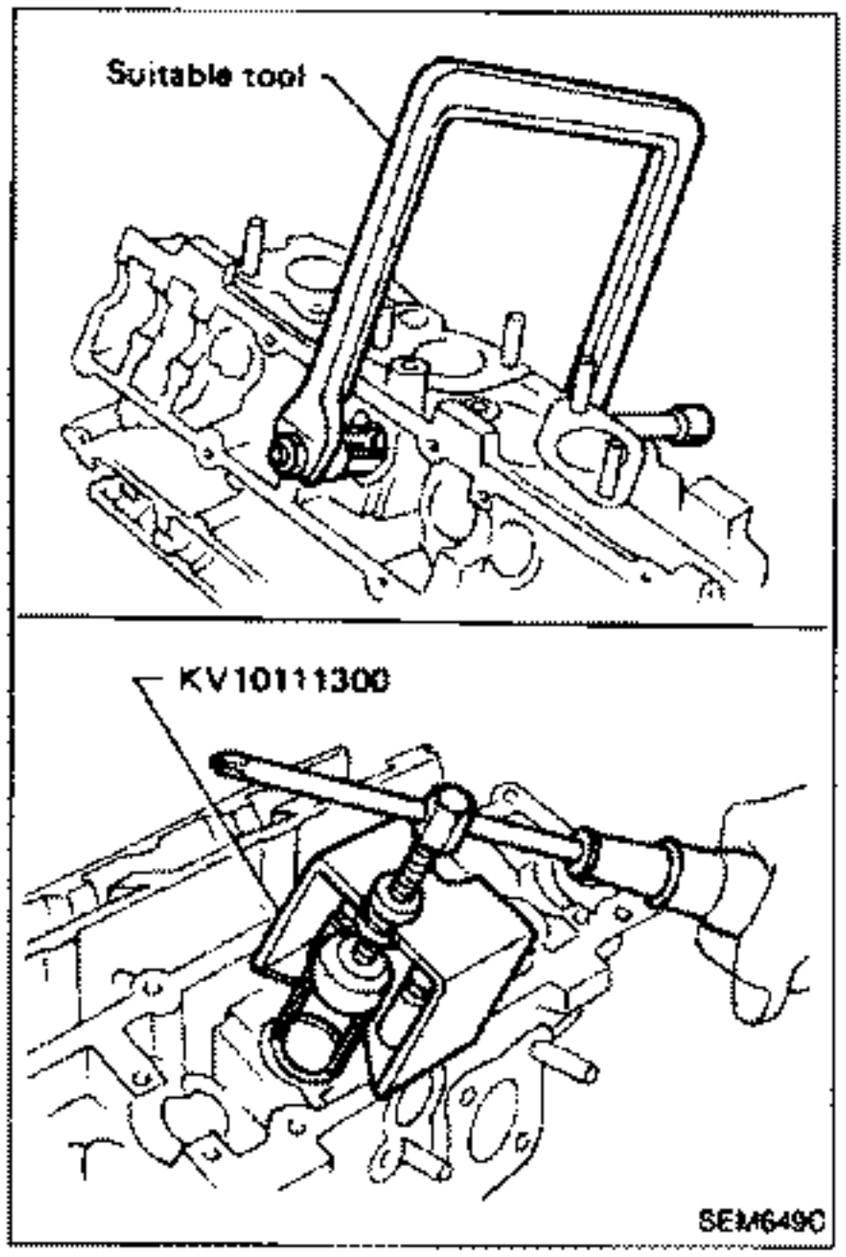

8. Pry out valve oil seals.

Inspection

CYLINDER HEAD DISTORTION

Head surface flatness:

Less than 0.1 mm (0.004 in)

If beyond the specified limit, replace it or resurface it.

Resurfacing limit:

The resurfacing limit of cylinder head is determined by the cylinder block resurfacing in an engine.

Amount of cylinder head resurfacing is "A".

Amount of cylinder block resurfacing is "B".

The maximum limit is as follows:

A + B = 0.2 mm (0.008 in)

After resurfacing cylinder head, check to make sure that camshaft rotates freely by hand. If resistance is felt, cylinder head must be replaced.

Nominal cylinder head height from camshaft center:

169.5 - 169.7 mm (6.673 - 6.681 in)

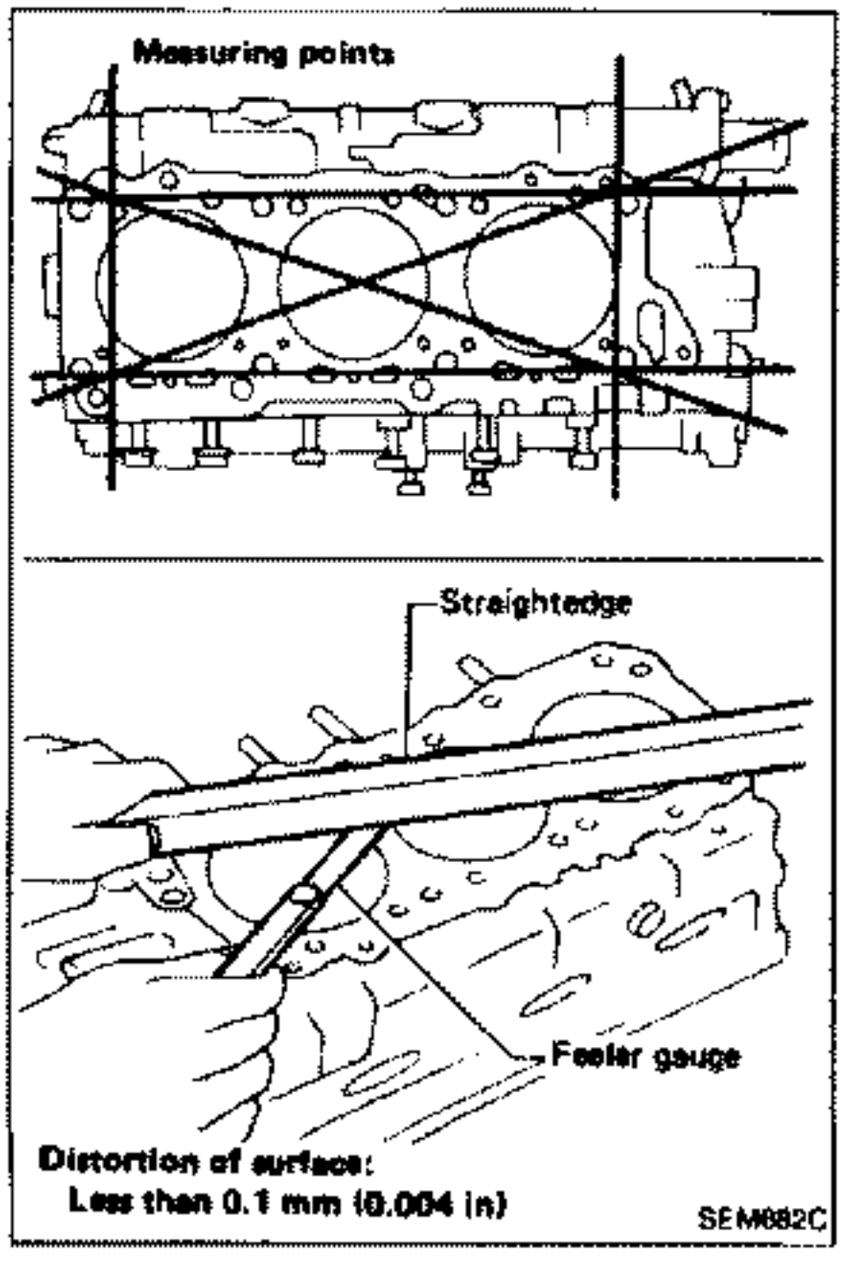

Inspection (Cont'd)

CAMSHAFT VISUAL CHECK

Check camshaft for scratches, seizure and wear.

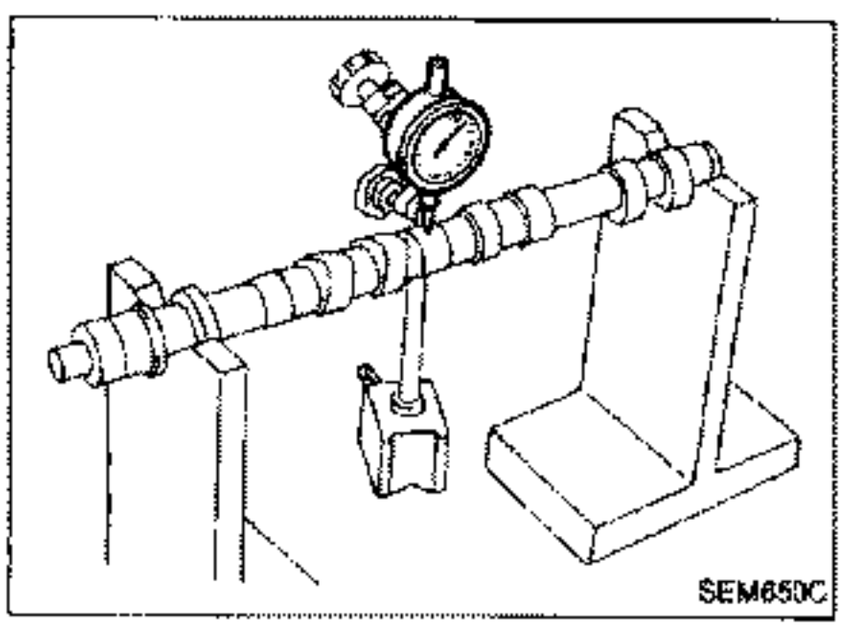

CAMSHAFT RUNOUT

1. Measure camshaft runout at the center journal.
   Runout (Total Indicator reading):
   Limit 0.1 mm (0.004 in)
2. If it exceeds the limit, replace camshaft.

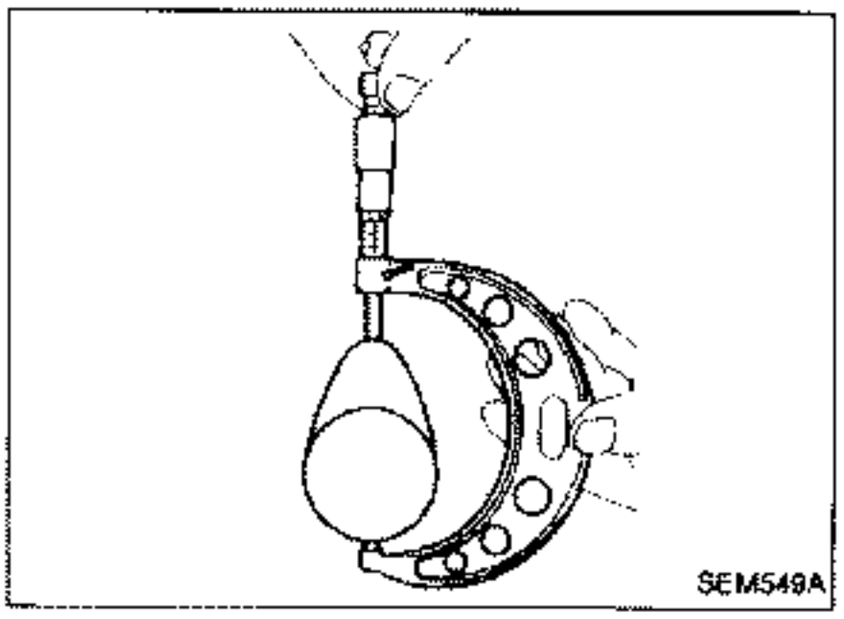

CAMSHAFT CAM HEIGHT

1. Measure camshaft cam height.
   Standard cam height:
   40.405 - 40.595 mm (1.5907 - 1.5982 in)
   Cam wear limit:
   0.15 mm (0.0059 in)
2. If wear is beyond the limit, replace camshaft.

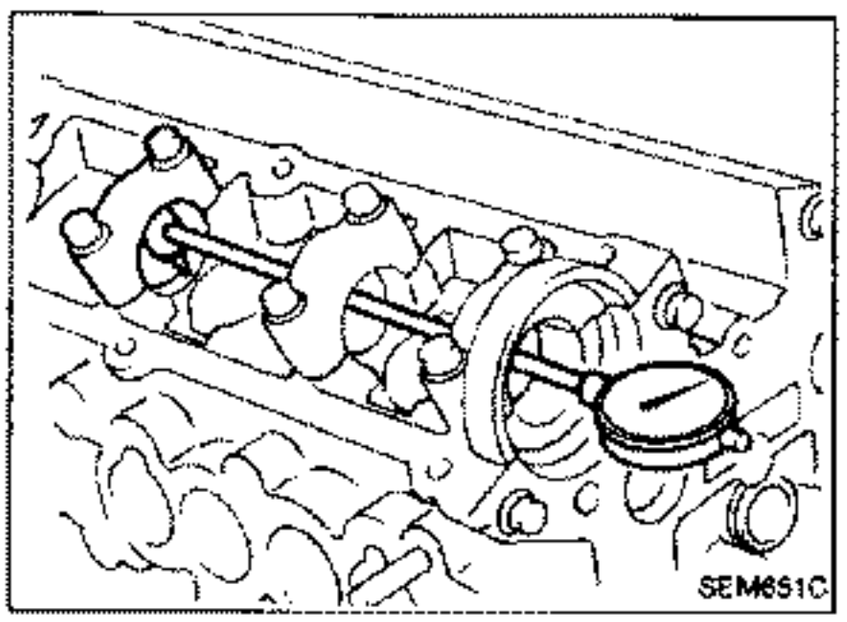

CAMSHAFT JOURNAL CLEARANCE

1. Install camshaft bracket and tighten bolts to the specified torque.
2. Measure inner diameter of camshaft bearing.
   Standard inner diameter:
   28.000 - 28.021 mm (1.1024 - 1.1032 in)

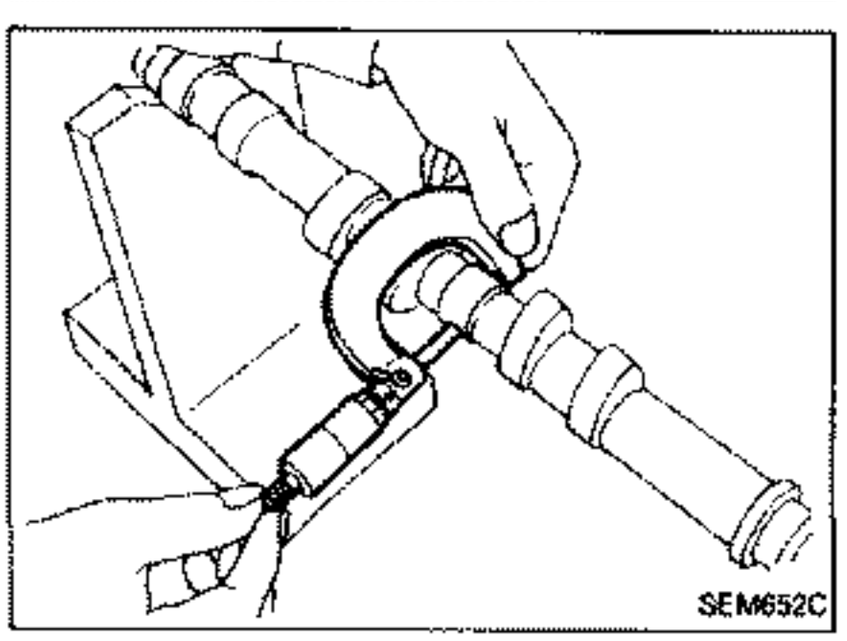

3. Measure outer diameter of camshaft journal.
   Standard outer diameter:
   27.935 - 27.955 mm (1.0998 - 1.1006 in)
4. If clearance exceeds the limit, replace camshaft and/or cylinder head.
   Camshaft journal clearance limit:
   0.15 mm (0.0059 in)

Inspection (Cont'd)

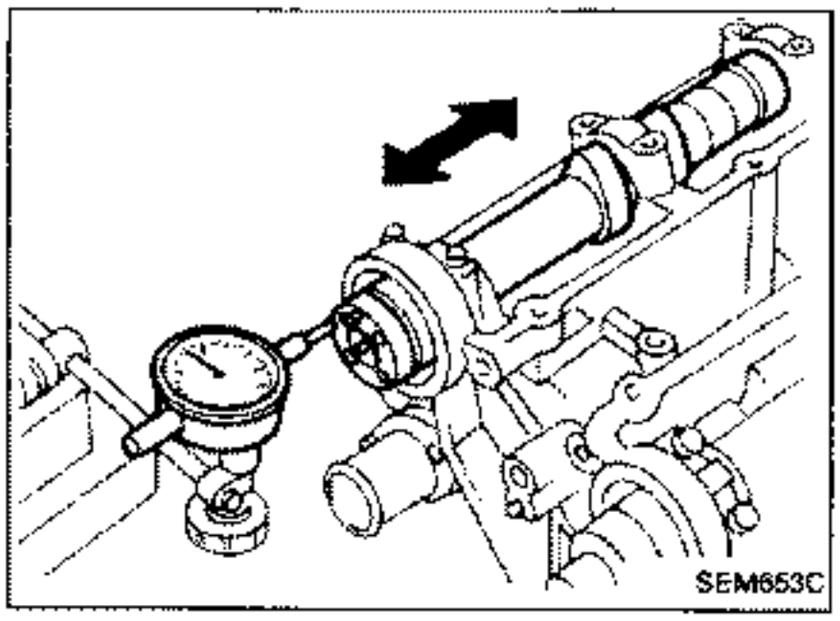

CAMSHAFT END PLAY

1. Install camshaft in cylinder head.
2. Measure camshaft end play.

Camshaft end play:

Standard

0.03 - 0.08 mm (0.0012 - 0.0031 in)

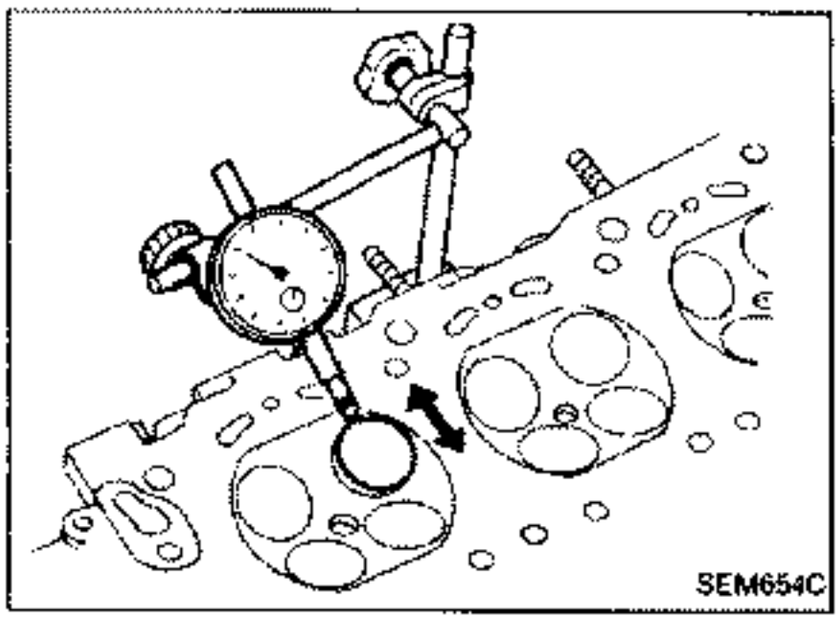

VALVE GUIDE CLEARANCE

1. Push valve stem out so that its end is even with valve guide height. Measure valve runout by moving valve.

Valve deflection limit (Dial gauge reading):

0.2 mm (0.008 in)

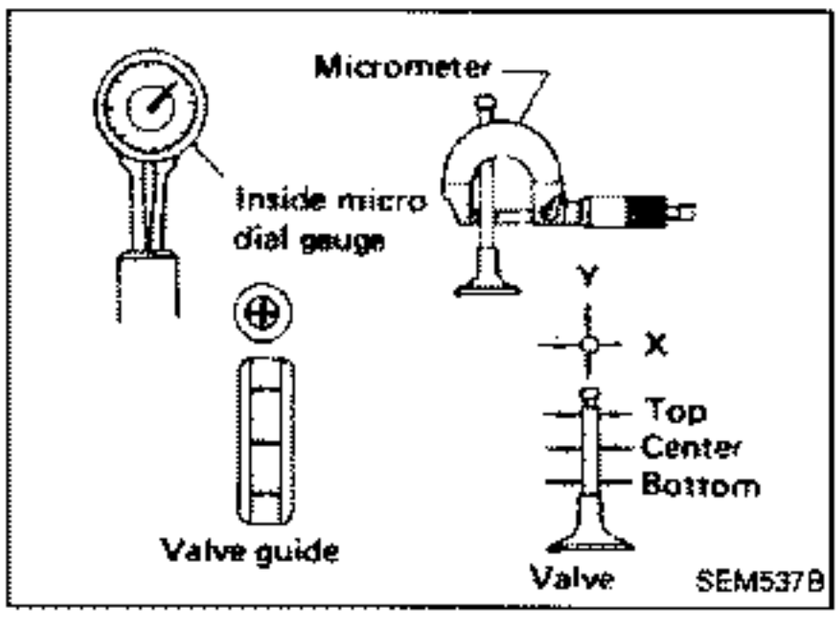

2. If it exceeds the limit, check valve to valve guide clearance.

a. Measure valve stem diameter and valve guide inner diameter.

b. Check that clearance is within specification.

Valve to valve guide clearance limit:

0.10 mm (0.0039 in)

c. If it exceeds the limit, replace valve or valve guide.

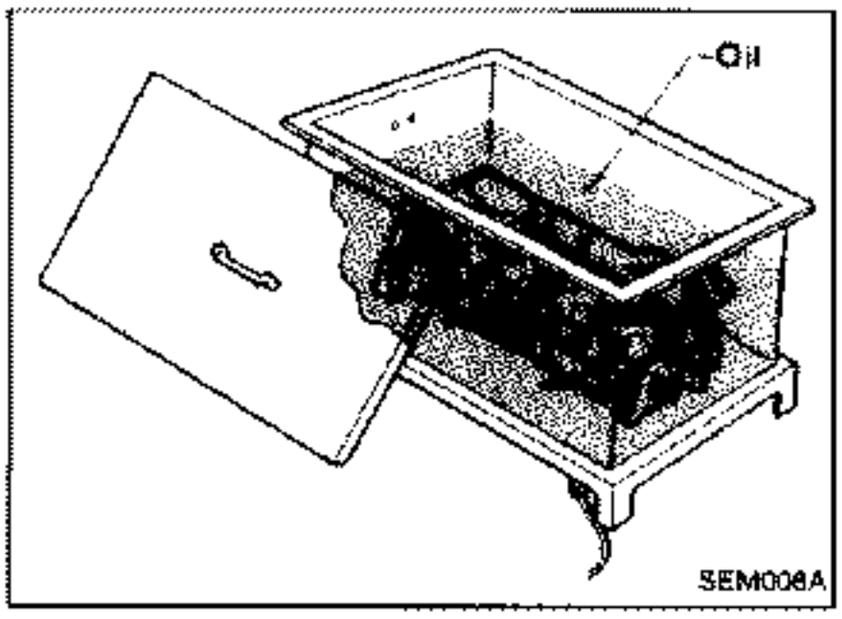

VALVE GUIDE REPLACEMENT

1. To remove valve guide, heat cylinder head to 150 to 160°C (302 to 320°F).

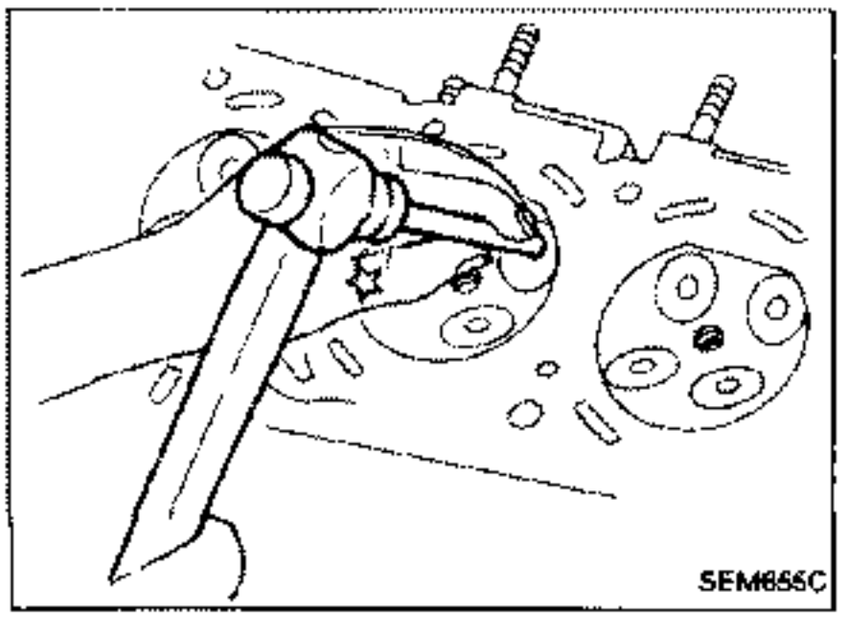

2. Drive out valve guide with a press [under a 20 kN (2 t, 2.2 US ton, 2.0 Imp ton) pressure] or hammer and suitable tool.

Inspection (Cont'd)

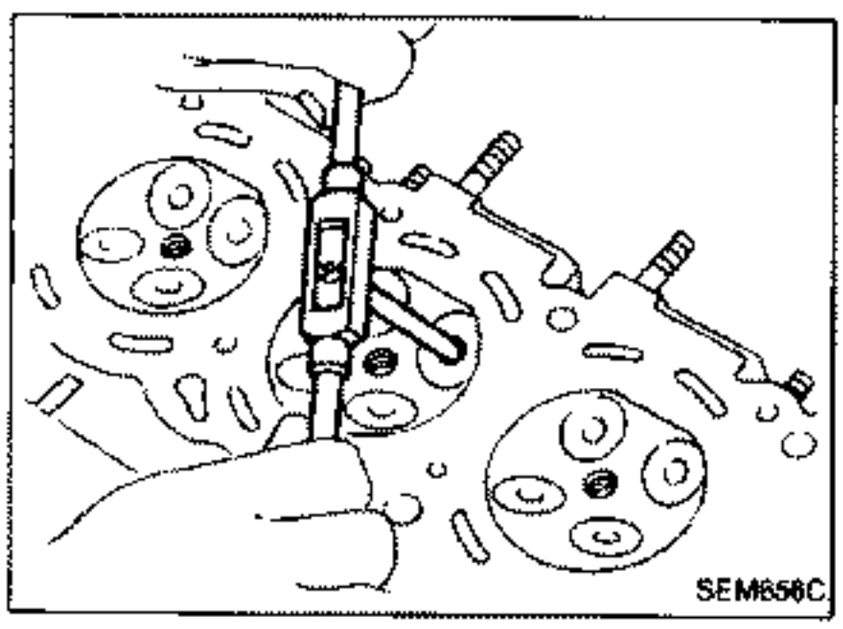

3. Ream cylinder head valve guide hole.
   Valve guide hole diameter (for service parts):
   Intake and Exhaust
   10.175 - 10.196 mm (0.4006 - 0.4014 in)

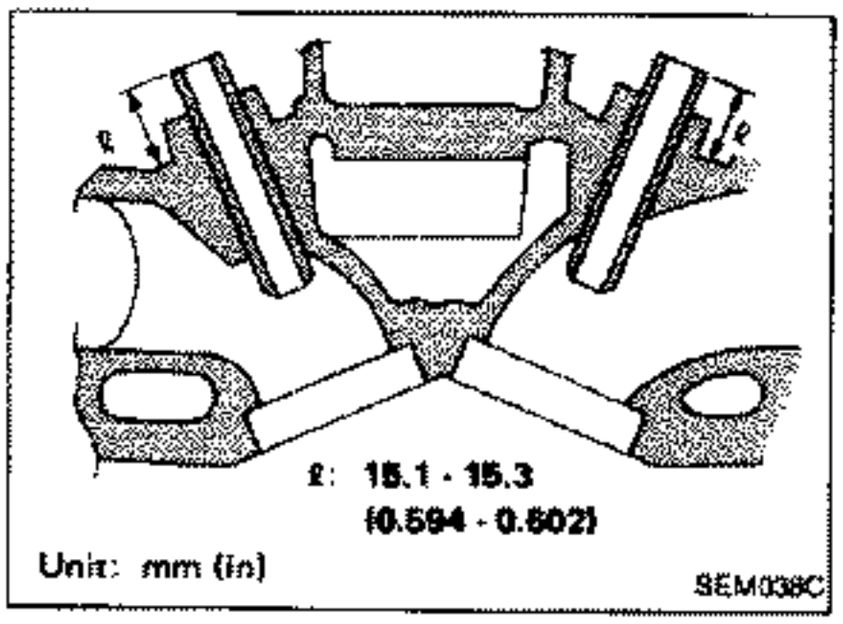

4. Heat cylinder head to 150 to 160°C (302 to 320°F) and press service valve guide onto cylinder head.
   Projection "ℓ":
   15.1 - 15.3 mm (0.594 - 0.602 in)

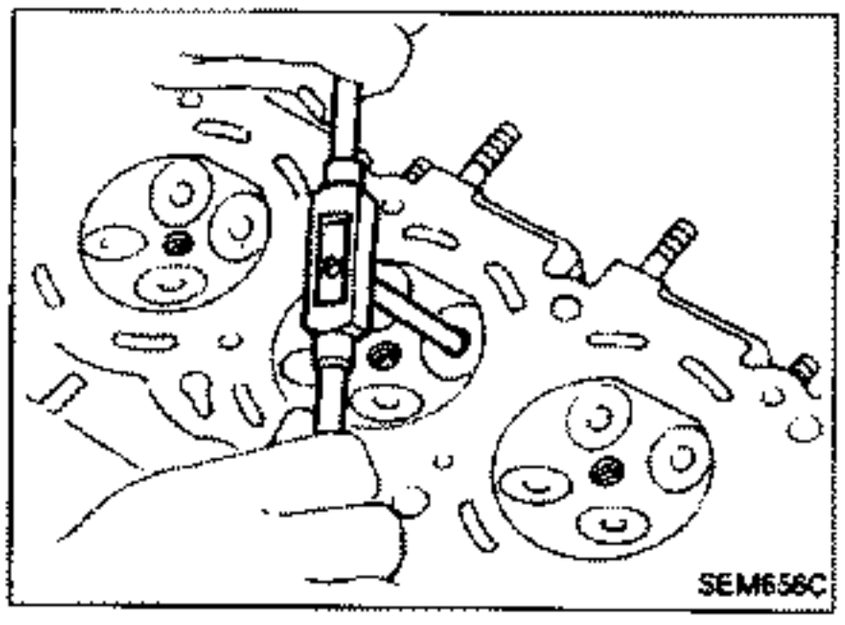

5. Ream valve guide.
   Finished size:
   Intake and Exhaust
   6.000 - 6.018 mm (0.2362 - 0.2369 in)

VALVE SEATS

Check valve seats for evidence of pitting at valve contact surface, and reseat or replace if it is worn excessively.

- **Before repairing valve seats, check valve and valve guide for wear. If they have worn, replace them. Then correct valve seat.**
- **Cut with both hands to assure a uniform surface.**

Inspection (Cont'd)

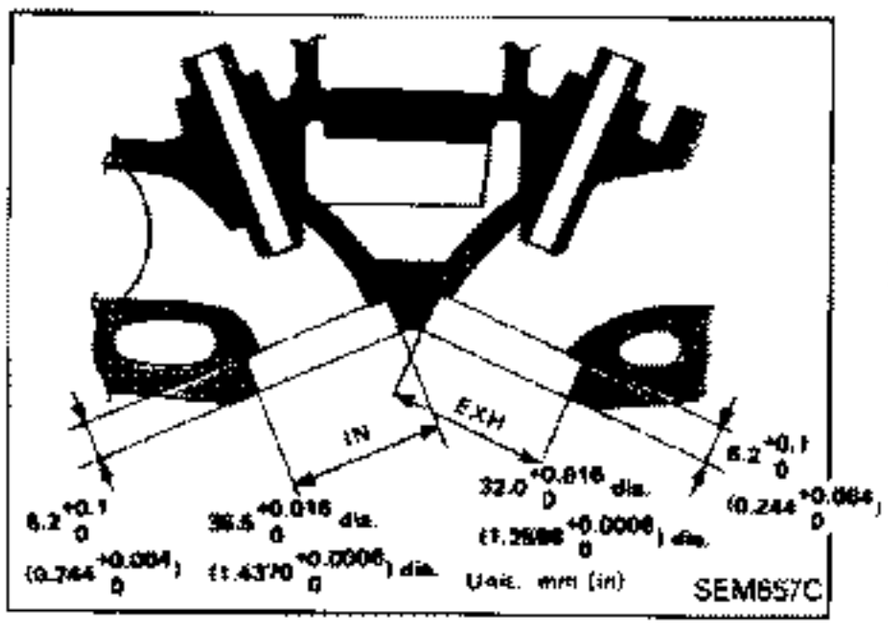

REPLACING VALVE SEAT FOR SERVICE PARTS

1. Bore out old seat until it collapses. The machine depth stop should be set so that boring cannot continue beyond the bottom face of the seat recess in cylinder head.
2. Ream cylinder head recess.

Reaming bore for service valve seat
Oversize [0.5 mm (0.020 in)]:
Intake
36.500 - 36.516 mm (1.4370 - 1.4376 in)
Exhaust
32.000 - 32.016 mm (1.2598 - 1.2605 in)

Reaming should be done to the concentric circles to valve guide center so that valve seat will have the correct fit.

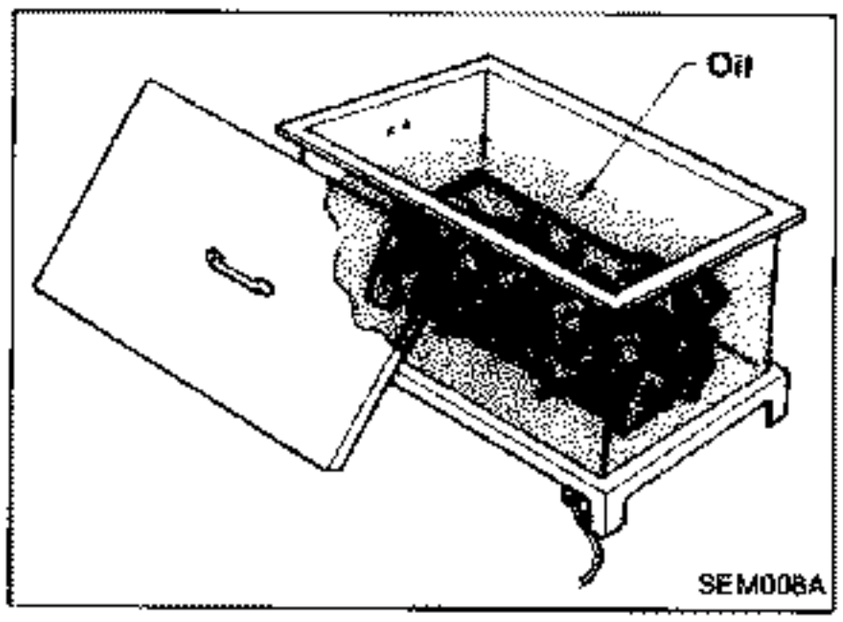

3. Heat cylinder head to 150 to 160°C (302 to 320°F).
4. Press fit valve seat until it seats on the bottom.

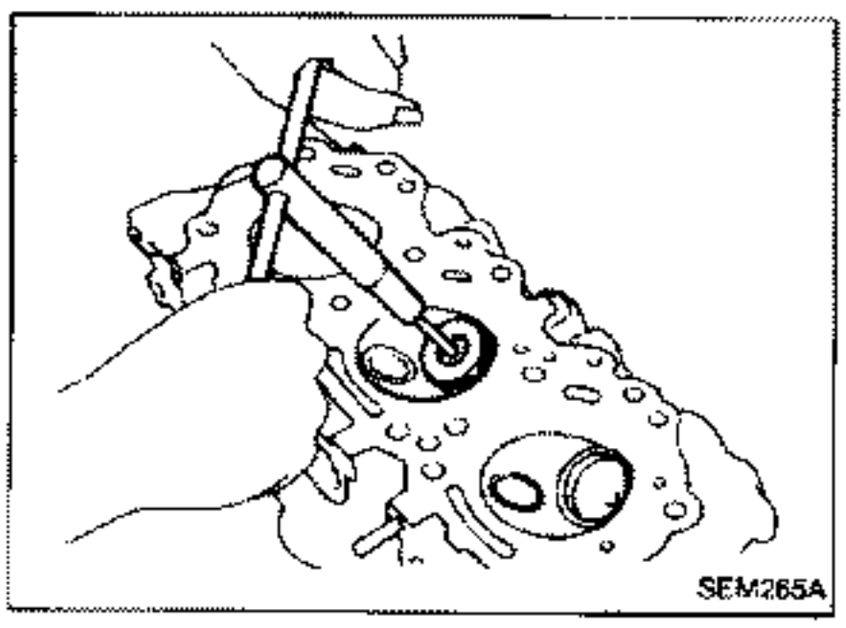

5. Cut or grind valve seat using suitable tool at the specified dimensions as shown in S.D.S.
6. After cutting, lap valve seat with abrasive compound.
7. Check valve seat contact condition.

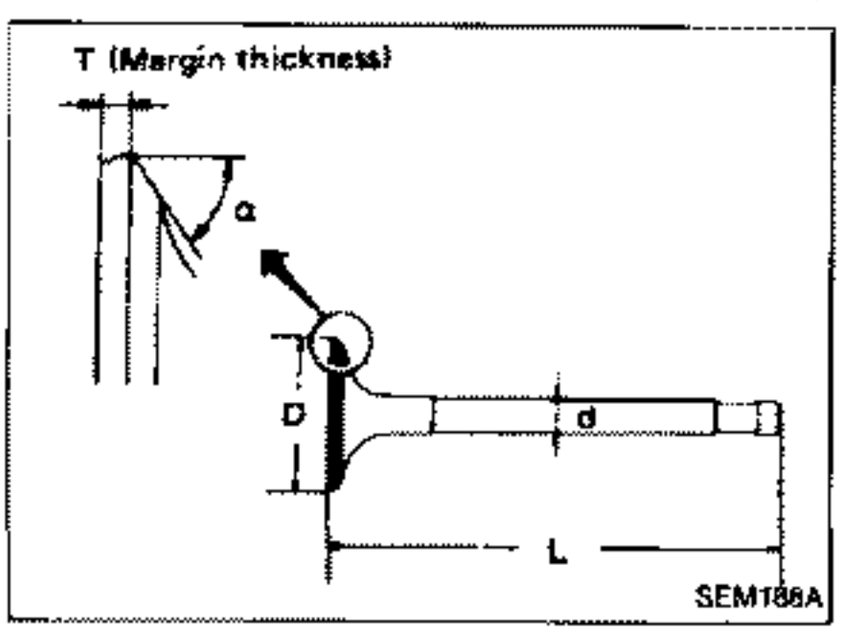

VALVE DIMENSIONS

Check dimensions in each valve. For dimensions, refer to S.D.S. When valve head has been worn down to 0.5 mm (0.020 in) in margin thickness, replace valve.

Grinding allowance for valve stem tip is 0.2 mm (0.008 in) or less.

Inspection (Cont'd)

VALVE SPRING

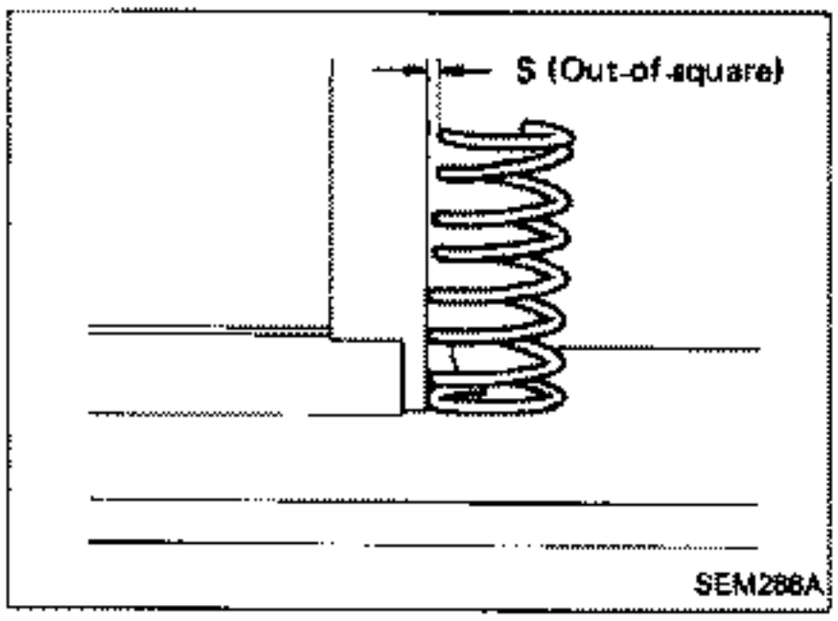

Squareness

1. Measure "S" dimension.
   Out-of-square:
   Less than 1.8 mm (0.071 in)
2. If it exceeds the limit, replace spring.

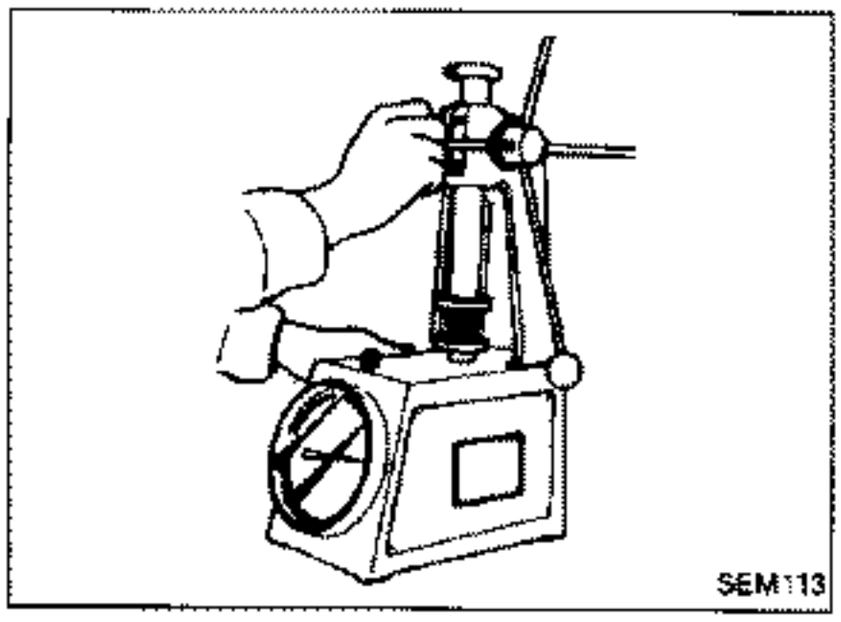

Pressure

Check valve spring pressure.

Pressure: N (kg, lb) at height mm (in)
Standard
536.4 (54.7, 120.6) at 26.5 (1.043)
Limit
More than 452.79 (46.17, 101.80) at 26.5 (1.043)
If it exceeds the limit, replace spring.

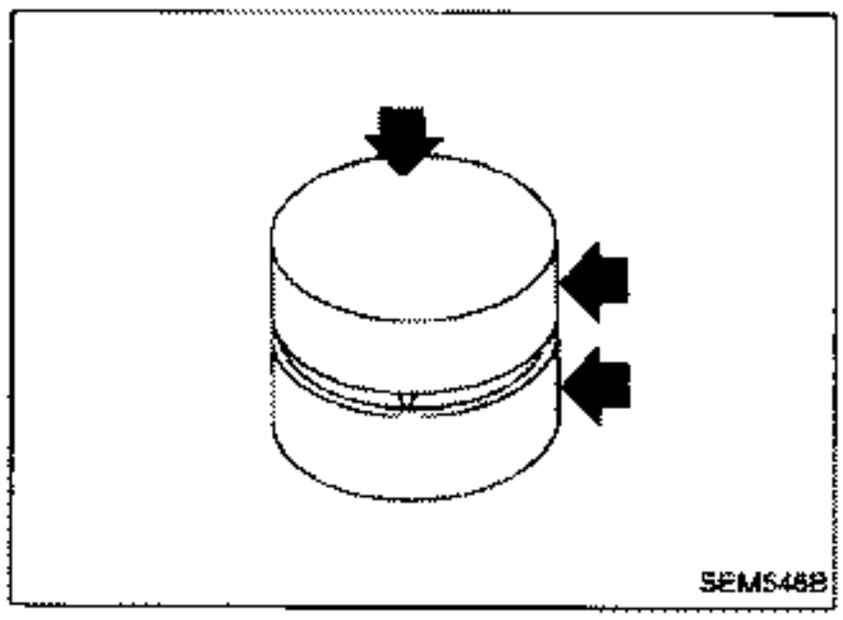

HYDRAULIC VALVE LIFTER

1. Check contact and sliding surfaces for wear or scratches.

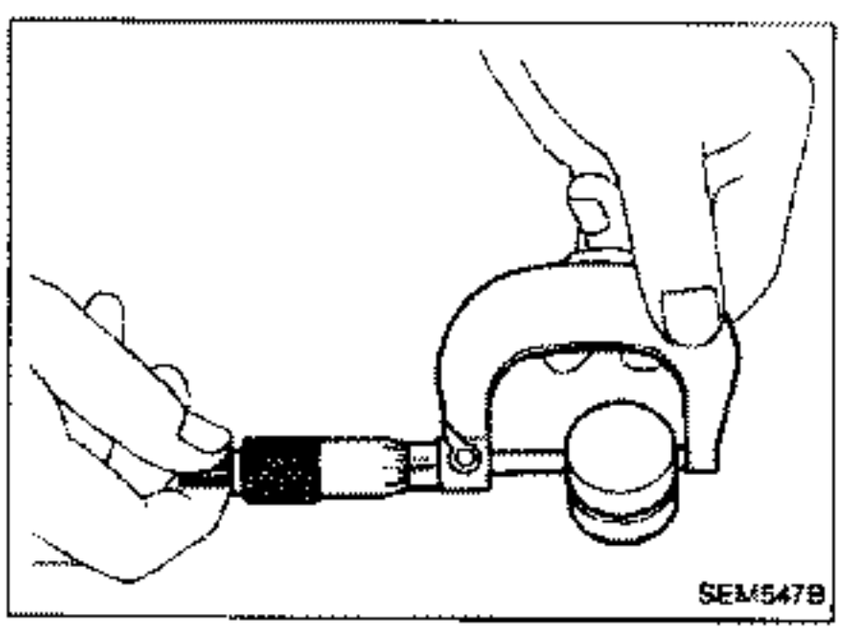

2. Check diameter of valve lifter.
   Outer diameter:
   30.955 - 30.965 mm (1.2187 - 1.2191 in)

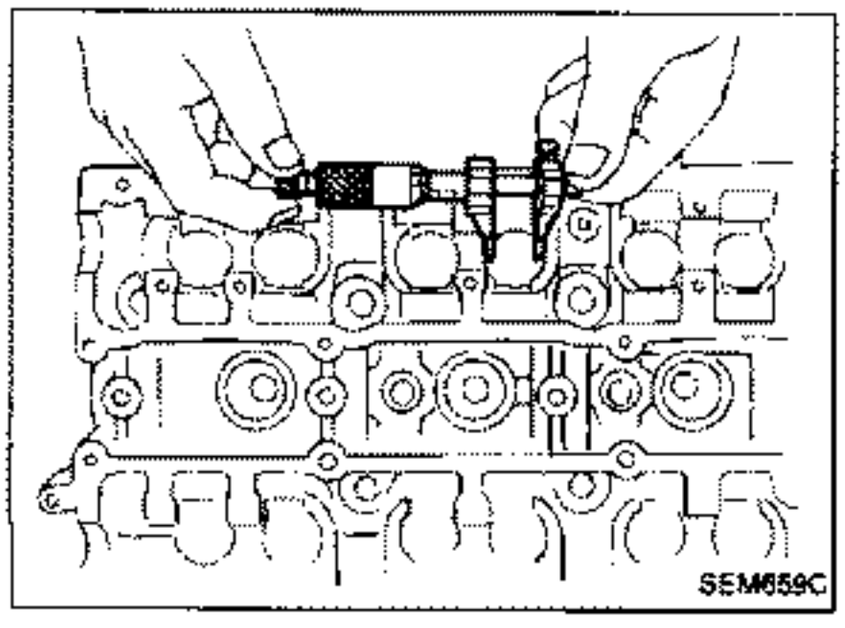

3. Check valve lifter guide inner diameter.
   Inner diameter:
   31.000 - 31.020 mm (1.2205 - 1.2213 in)
   Standard clearance between valve lifter and lifter guide:
   0.035 - 0.065 mm (0.0014 - 0.0026 in)

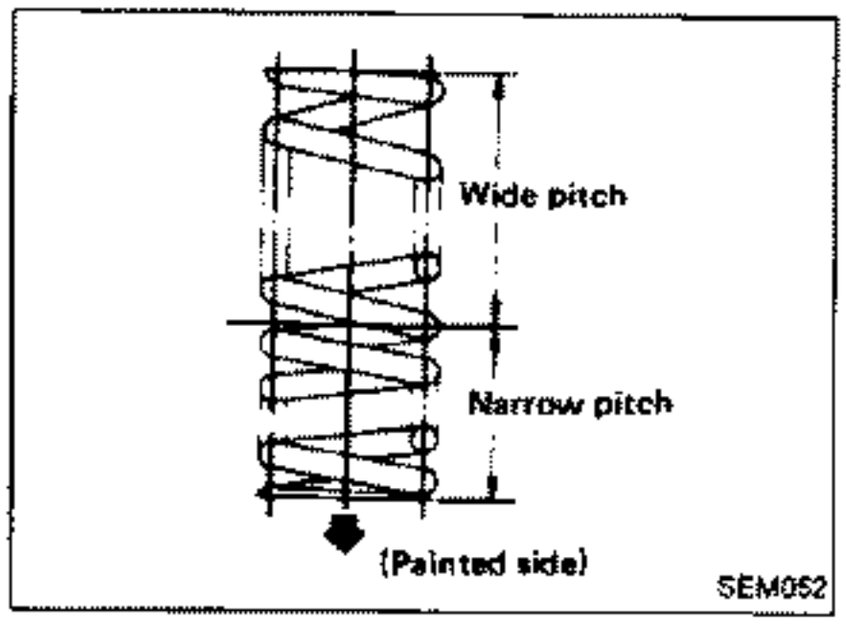

Assembly

1. Install valve component parts.

- **Always use new valve oil seal. (Refer to OIL SEAL REPLACEMENT.)**
- **Install valve spring (uneven pitch type) with its narrow pitch side (painted side) toward cylinder head side.**

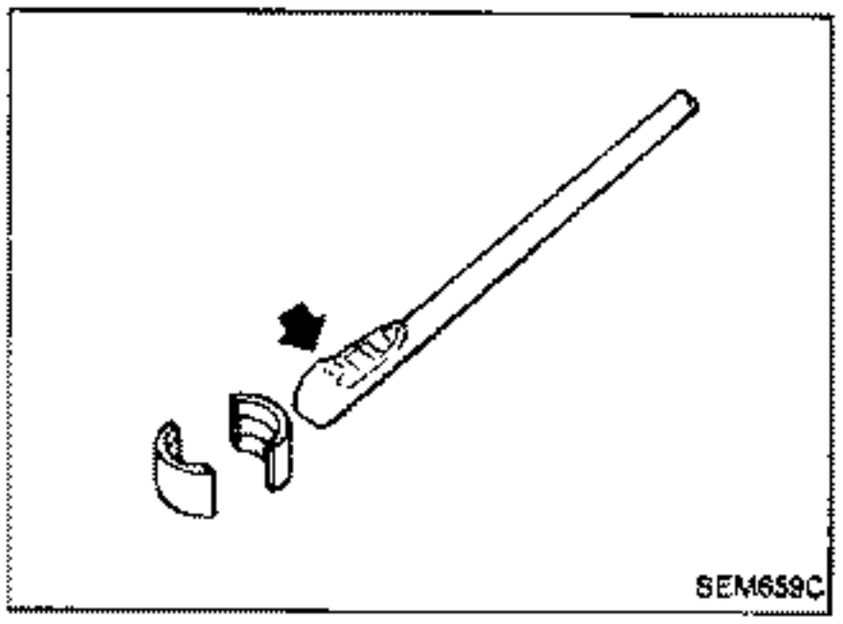

- To facilitate installation of collet, apply a small amount of grease to a piece of wire or a pencil and attach collet to wire or pencil, as shown.

2. Install camshafts as shown.

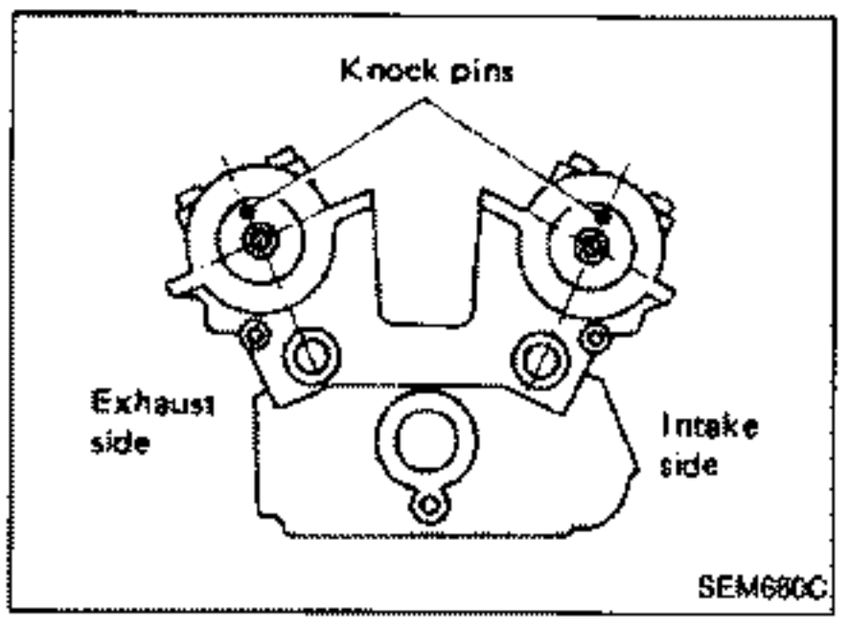

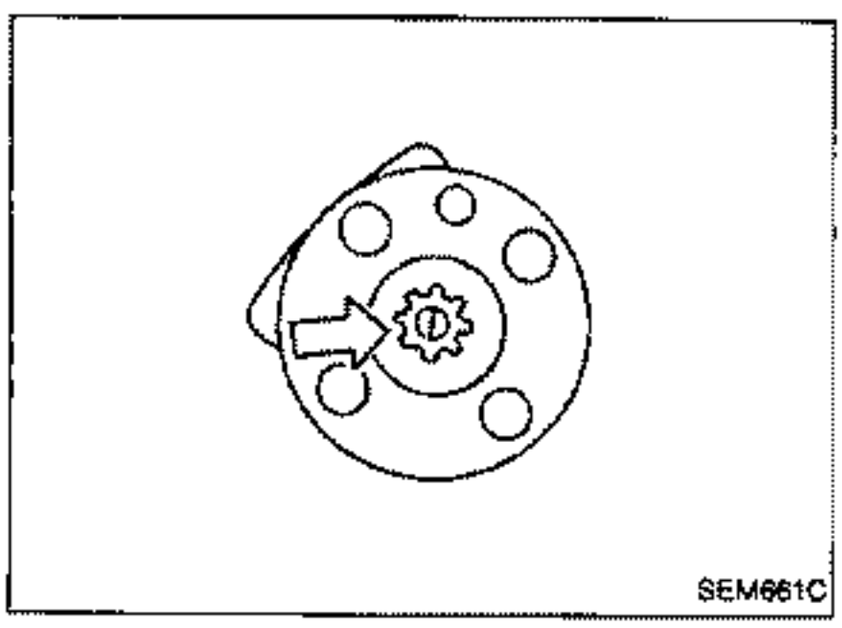

- Exhaust camshaft (left side) has spline for crank angle sensor.

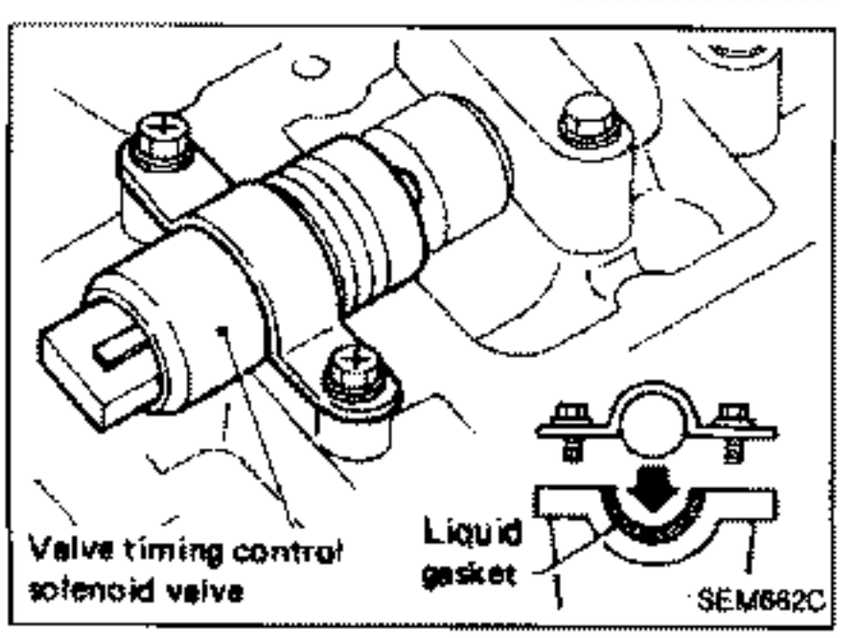

- When installing valve timing control solenoid valves, apply liquid gasket as shown.

Assembly (Cont'd)

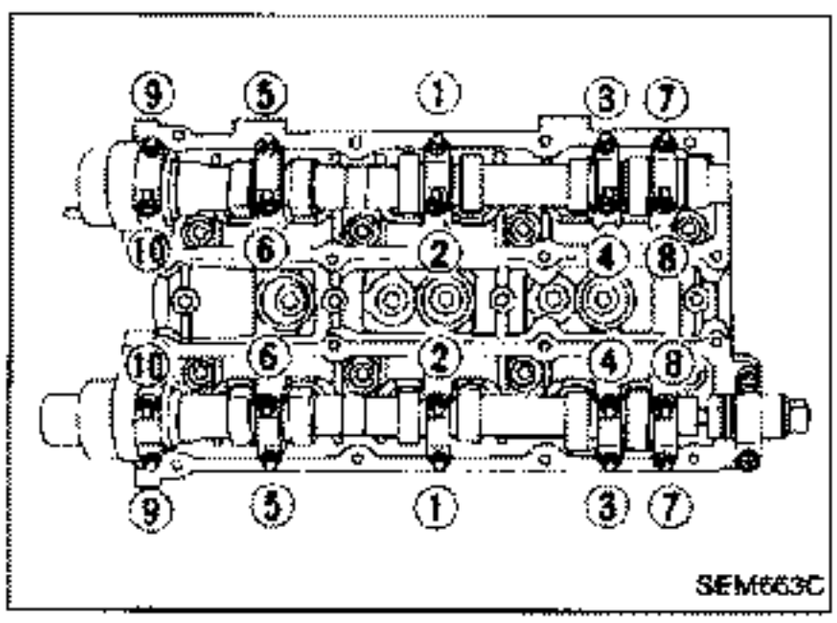

3. Install camshaft brackets.

Tighten camshaft bracket bolts gradually in two or three stages.

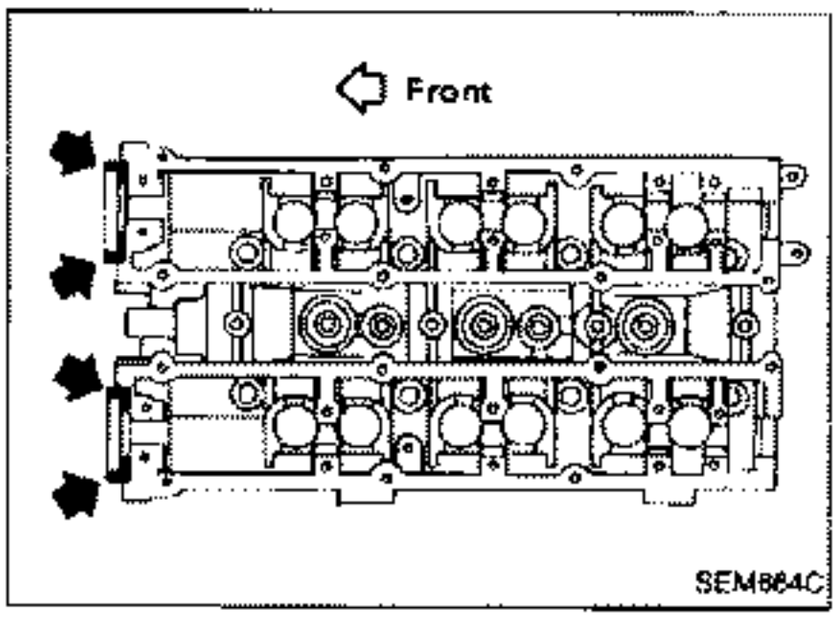

When installing front side camshaft brackets, apply liquid gasket as shown.

4. Apply engine oil to camshaft oil seal lip and install it in place.

Always use new camshaft oil seal.

5. Install rear timing belt cover.
6. Install camshaft sprockets.

When tightening bolts, fix camshaft to prevent it from rotating.

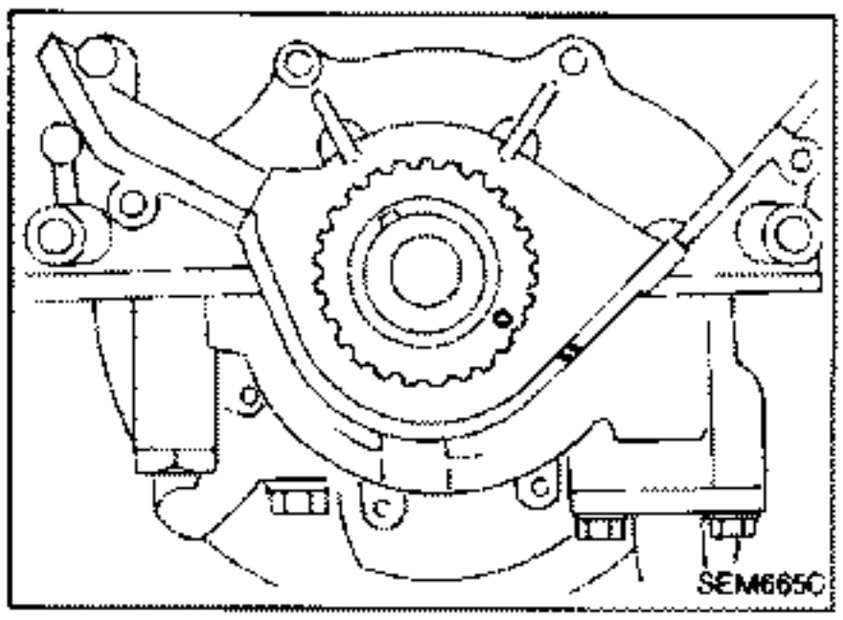

Installation

1. Set No. 1 piston at T.D.C. on its compression stroke as follows:

(1) Align crankshaft sprocket aligning mark with mark on oil pump body.

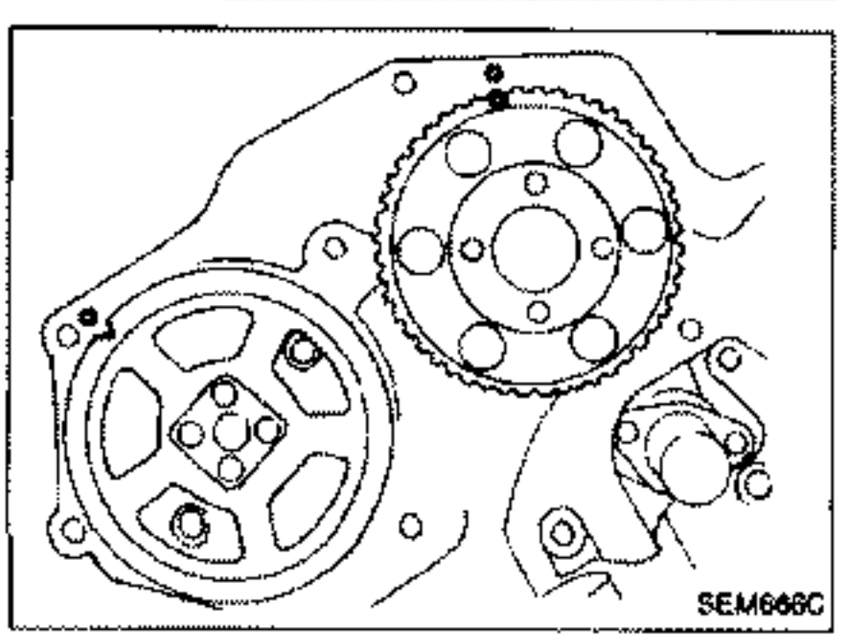

(2) Align camshaft sprocket aligning mark with mark on timing belt rear cover.

Installation (Cont'd)

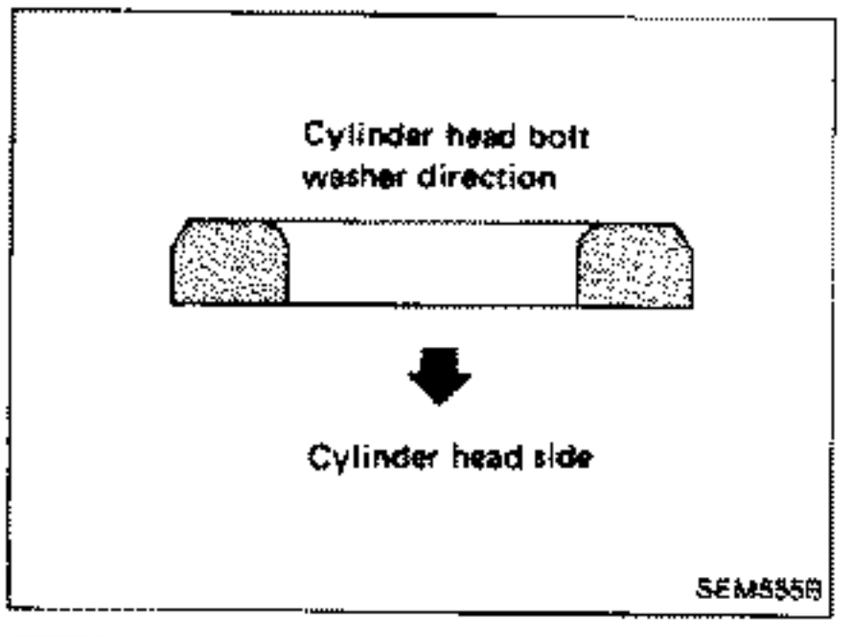

2. Install cylinder head with new gasket.

- **Be sure to install washers between bolts and cylinder head.**
- **Do not rotate crankshaft and camshaft separately, or valves will hit piston heads.**

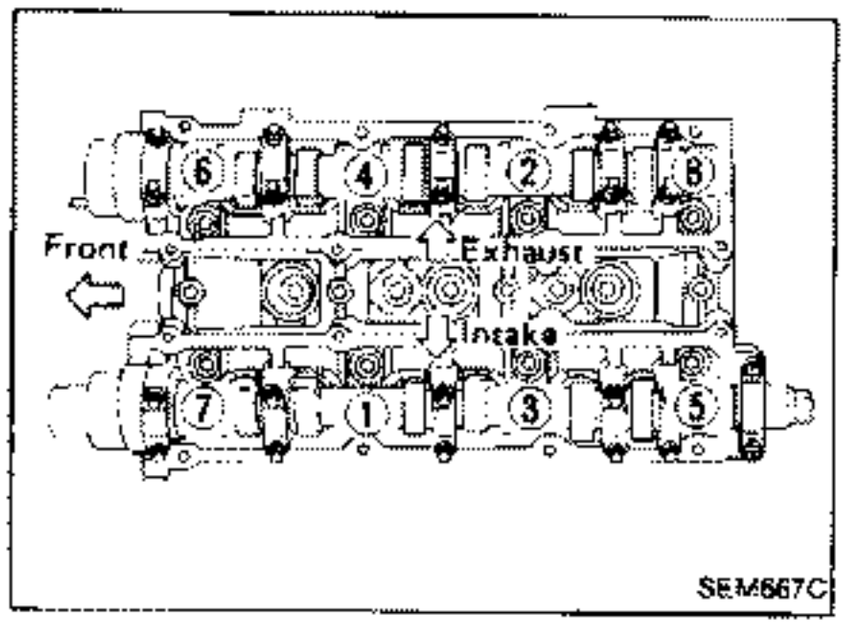

3. Tighten cylinder head bolts in numerical order.

- **Tightening procedure**

(1) Tighten all bolts to 39 N·m (4.0 kg-m, 29 ft-lb).
(2) Tighten all bolts to 123 N·m (12.5 kg-m, 90 ft-lb).
(3) Loosen all bolts completely.
(4) Tighten all bolts to 34 to 44 N·m (3.5 to 4.5 kg-m, 25 to 33 ft-lb).
(5) Turn bolts 65 to 75 degrees (L_1), 60 to 70 degrees (L_2) clockwise or, if an angle wrench is not available, tighten all bolts to 123 N·m (12.5 kg-m, 90 ft-lb).

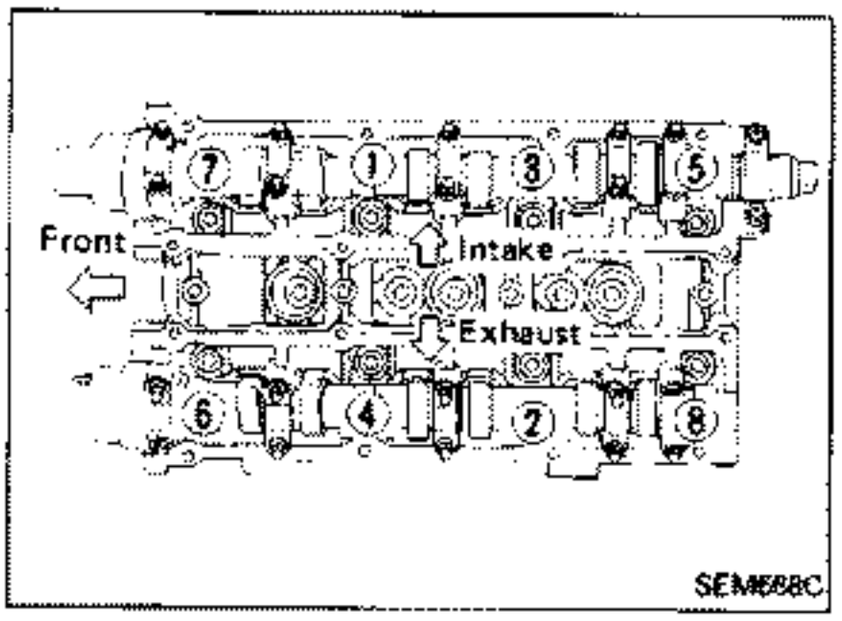

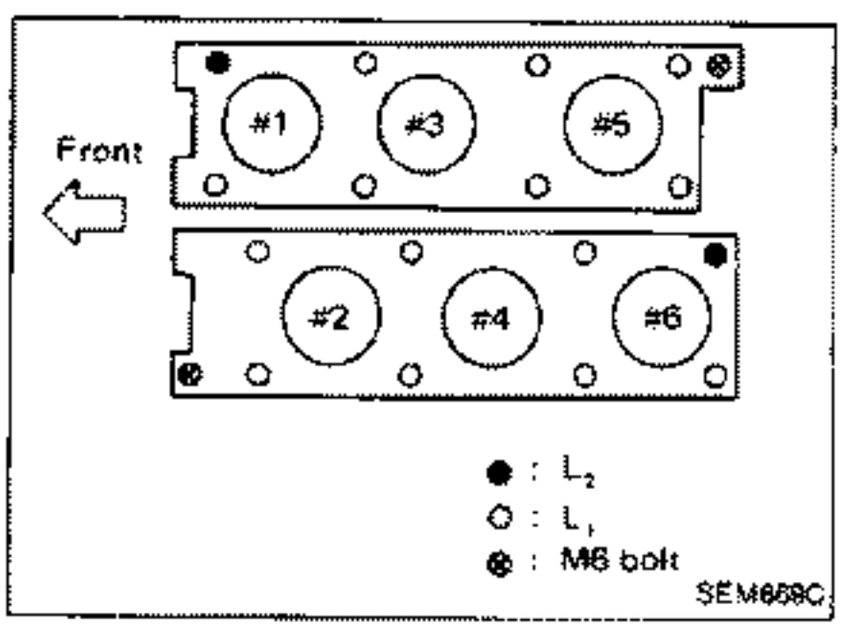

(6) Tighten bolts (⊗) as shown to 10 to 12 N·m (1.0 to 1.2 kg-m, 7 to 9 ft-lb).

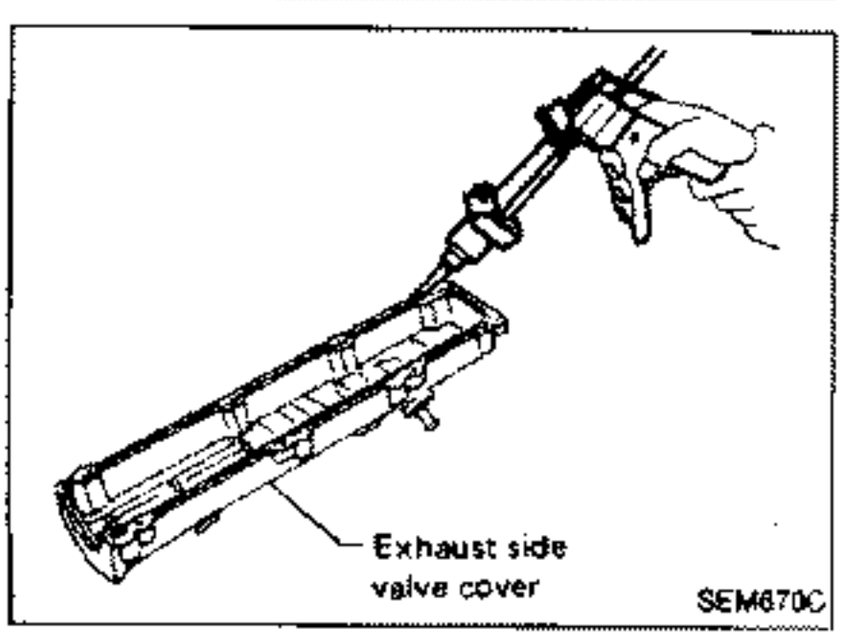

4. Install valve covers.
   When installing exhaust side valve covers, apply liquid gasket as shown.
5. Install remaining parts.

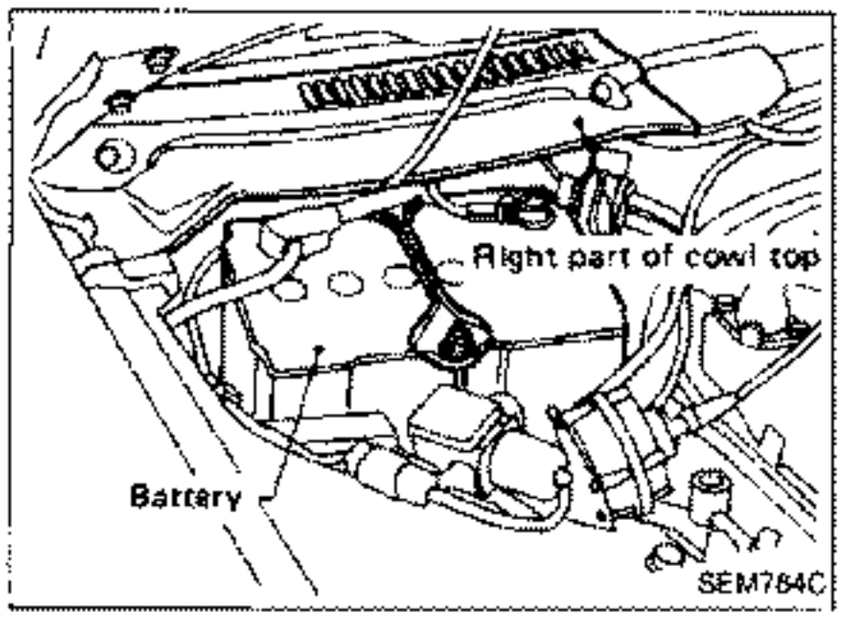

Removal

RIGHT SIDE UNIT

1. Remove right part of cowl top.
2. Remove battery.

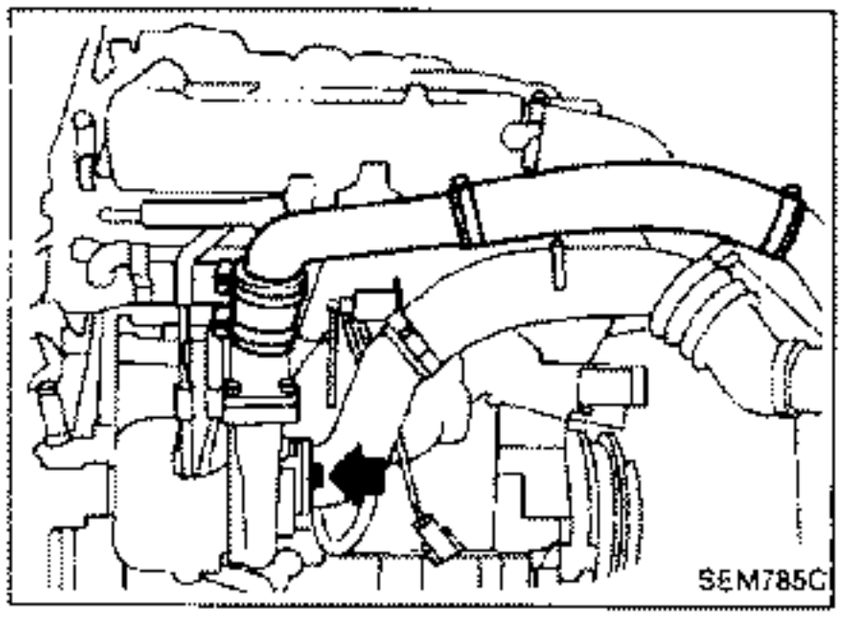

3. Remove air inlet hose and pipe.
4. Disconnect lower pipe from turbocharger unit.

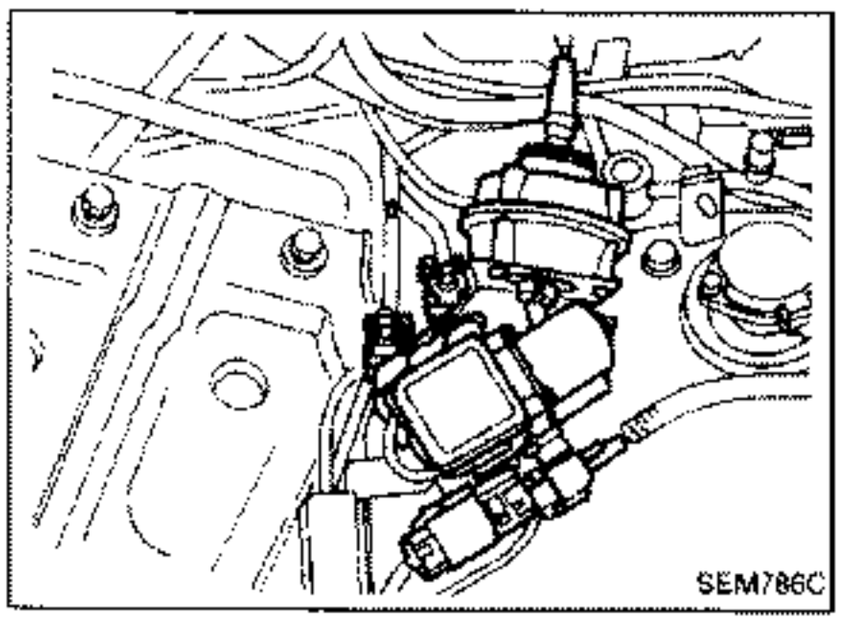

5. Remove A.S.C.D. bracket with wiper motor and solenoid valves.
6. Disconnect exhaust gas sensor harness connector.

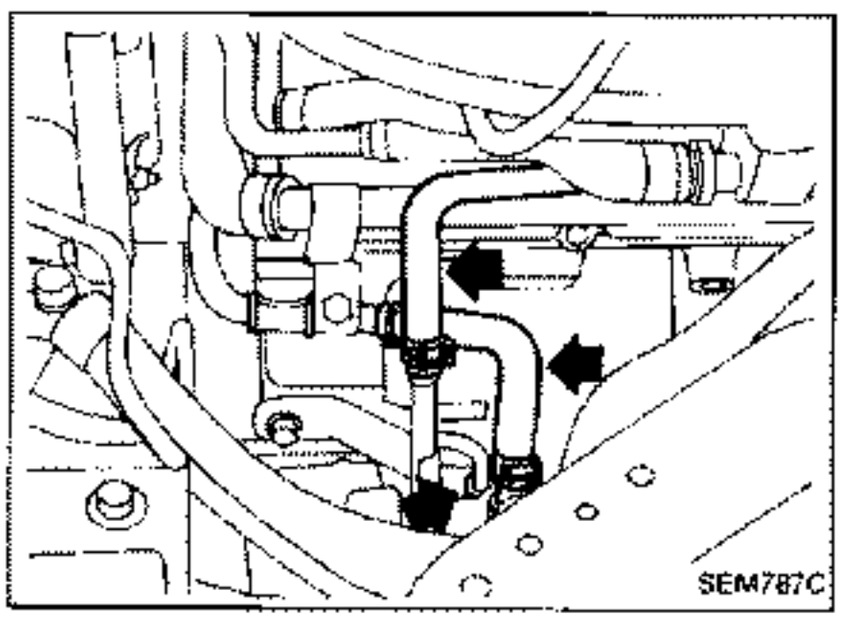

7. Remove turbocharger water hoses, and disconnect turbocharger oil inlet tube.
8. Remove two bolts fastening pre-catalyst to turbocharger unit.

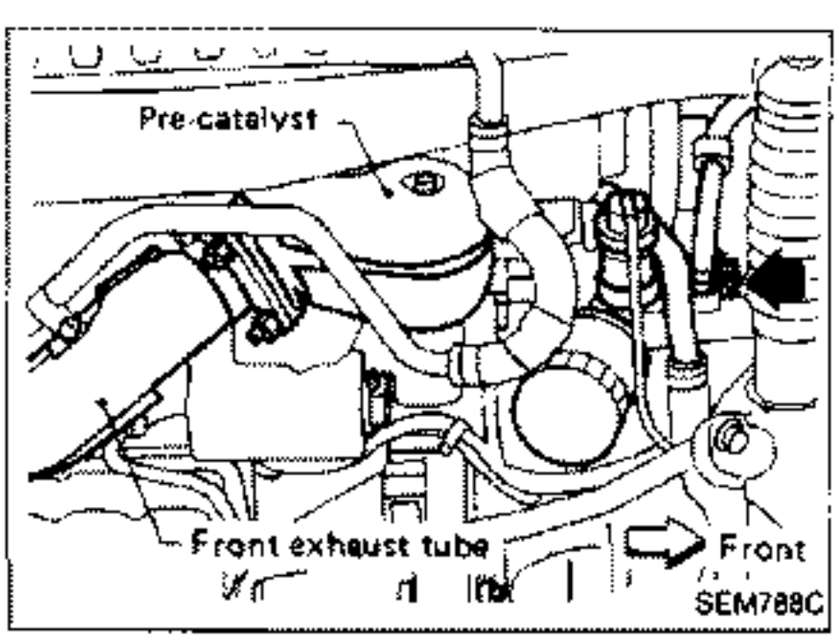

9. Remove the following parts;
- oil pressure switch,
- oil filter,
- turbocharger oil return tube,
- front exhaust tube,
- pre-catalyst

10. Disconnect oil hose from oil filter bracket, and turbocharger water tubes from turbocharger unit.

Removal (Cont'd)

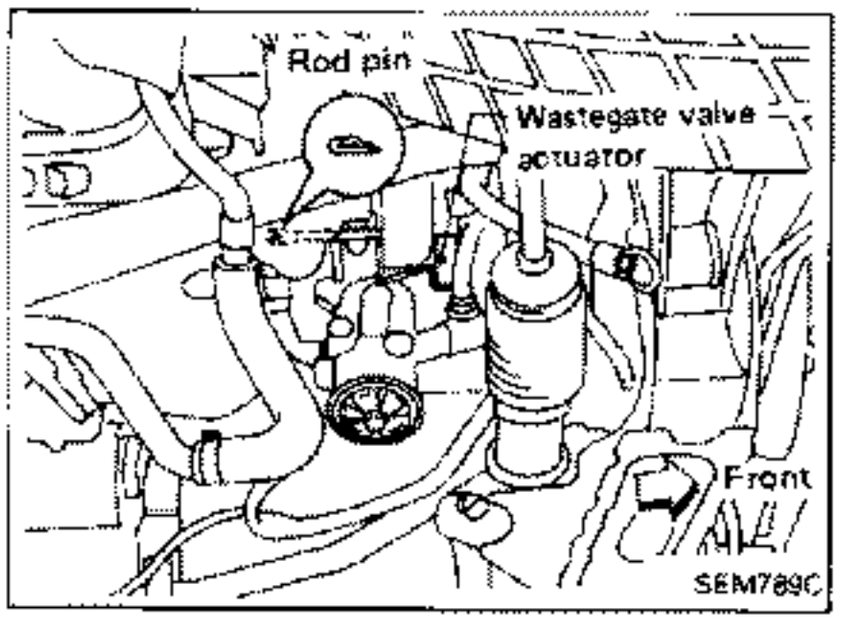

11. Remove rod pin of wastegate valve actuator.
12. Remove oil filter bracket.

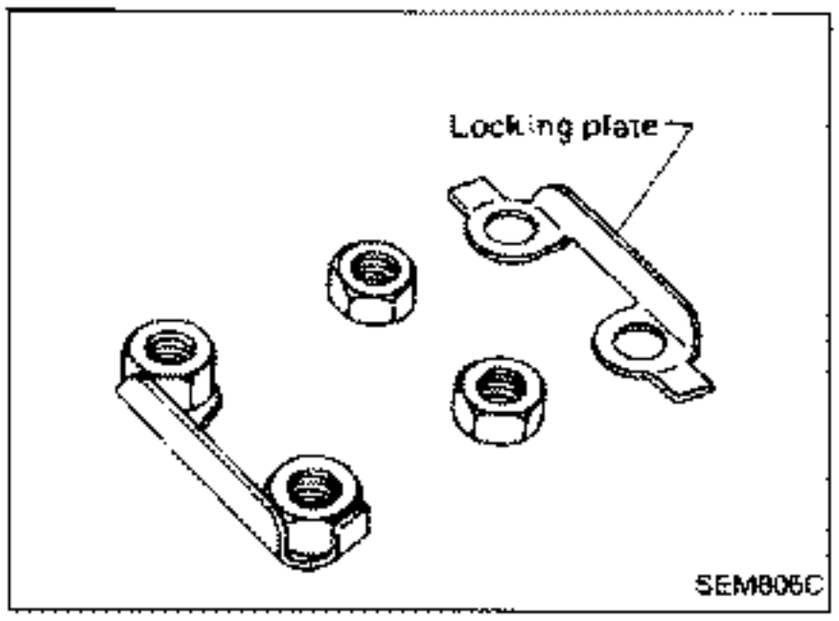

13. Unbend locking plates for fastening nuts of turbocharger unit.
14. Remove turbocharger unit.

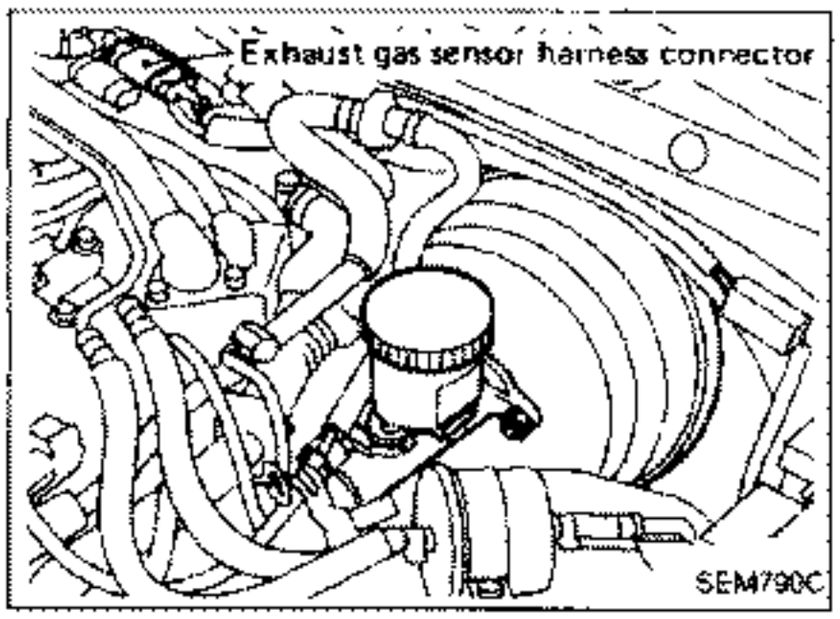

LEFT SIDE UNIT

1. Remove brake master cylinder and brake booster.
2. Disconnect exhaust gas sensor harness connector.

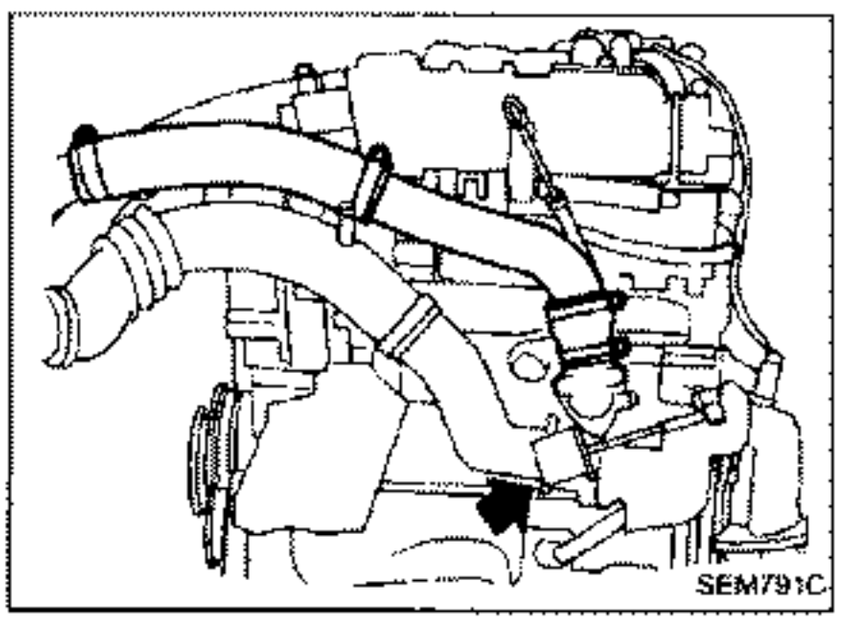

3. Remove air inlet hose and pipe.
4. Disconnect lower pipe from turbocharger unit.

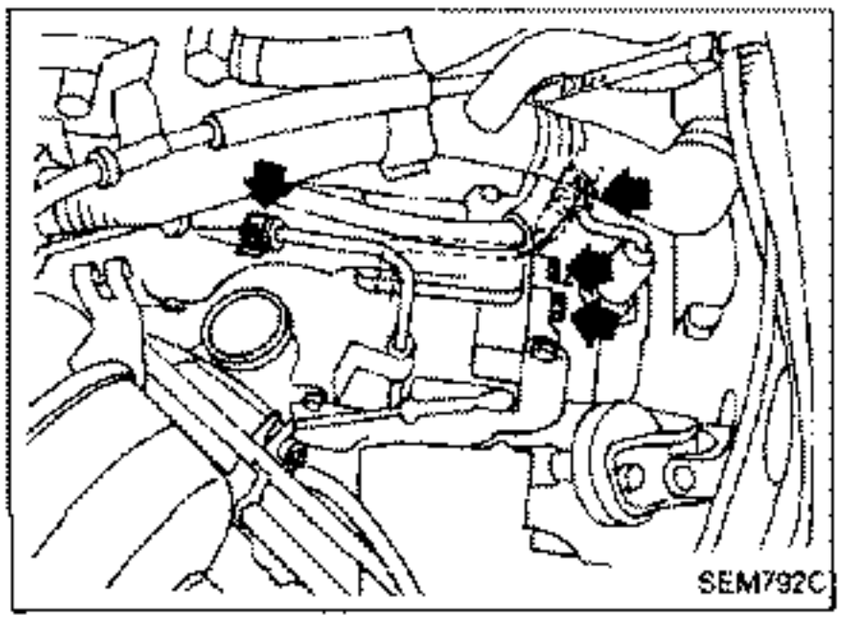

5. Disconnect water tubes.
6. Remove two bolts fastening pre-catalyst to turbocharger unit.

Removal (Cont'd)

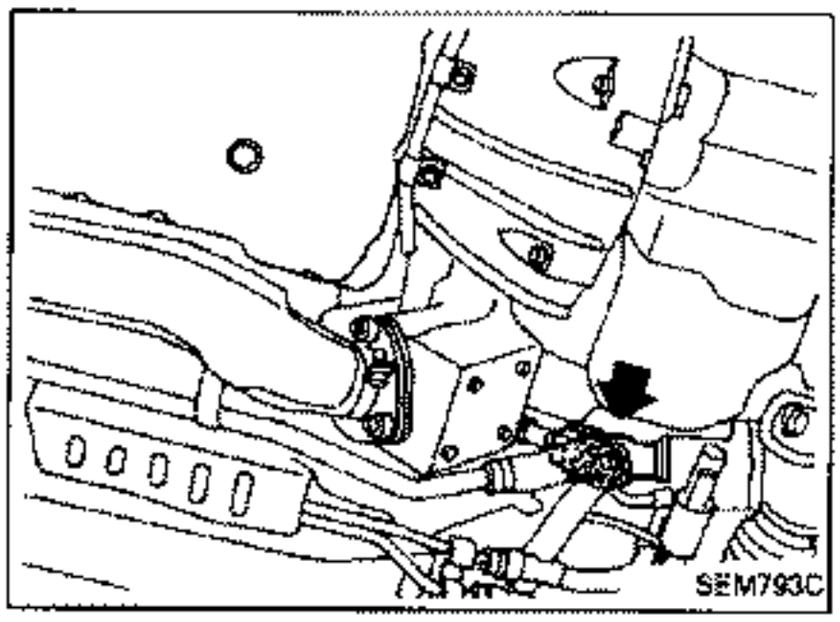

7. Remove front exhaust tube and pre-catalyst.
8. Disconnect steering lower joint.

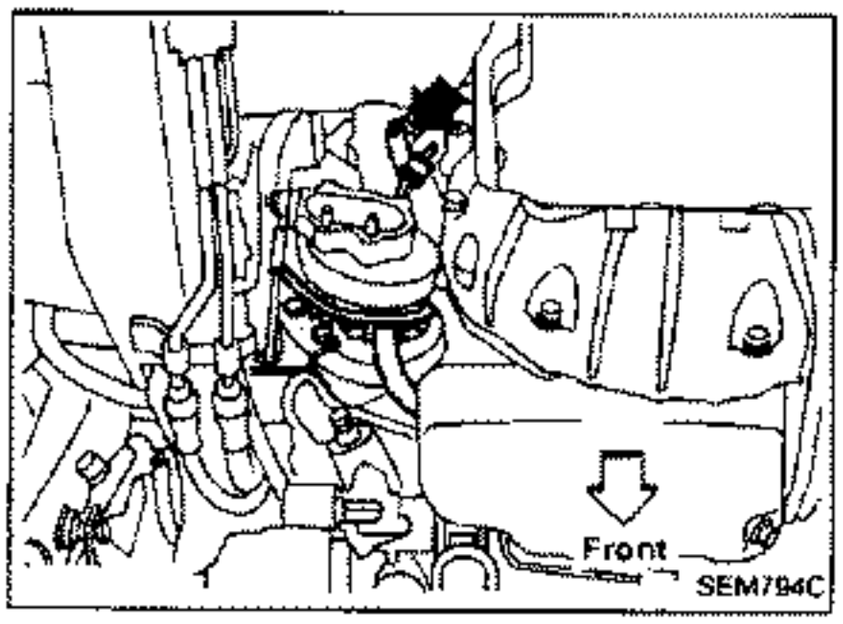

9. Remove turbocharger oil return tube and water tubes.
10. Disconnect E.G.R. tube and actuator bracket of turbocharger wastegate valve.

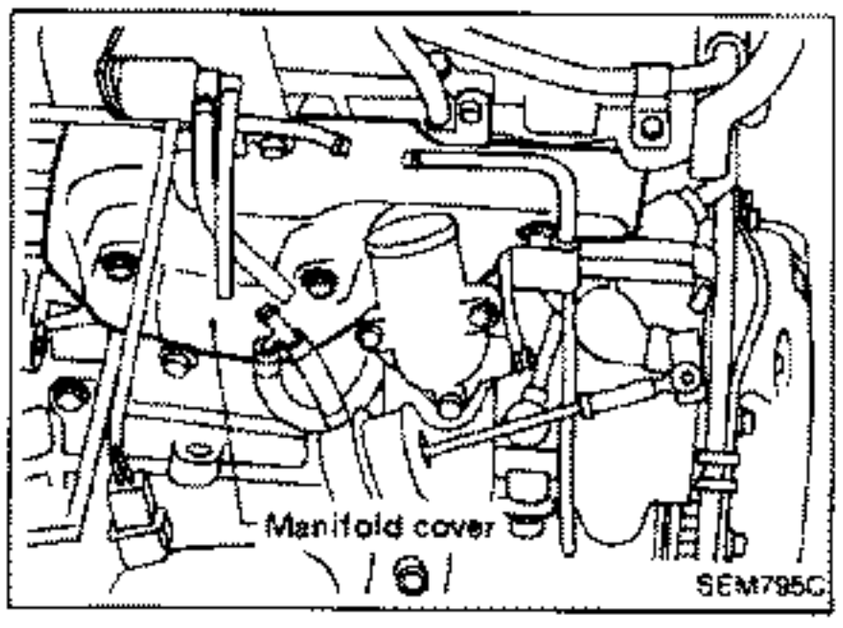

11. Remove manifold cover and fastening nuts.
12. Remove turbocharger unit with exhaust manifold.

Inspection

Proceed the following checks. If N.G., replace turbocharger units.

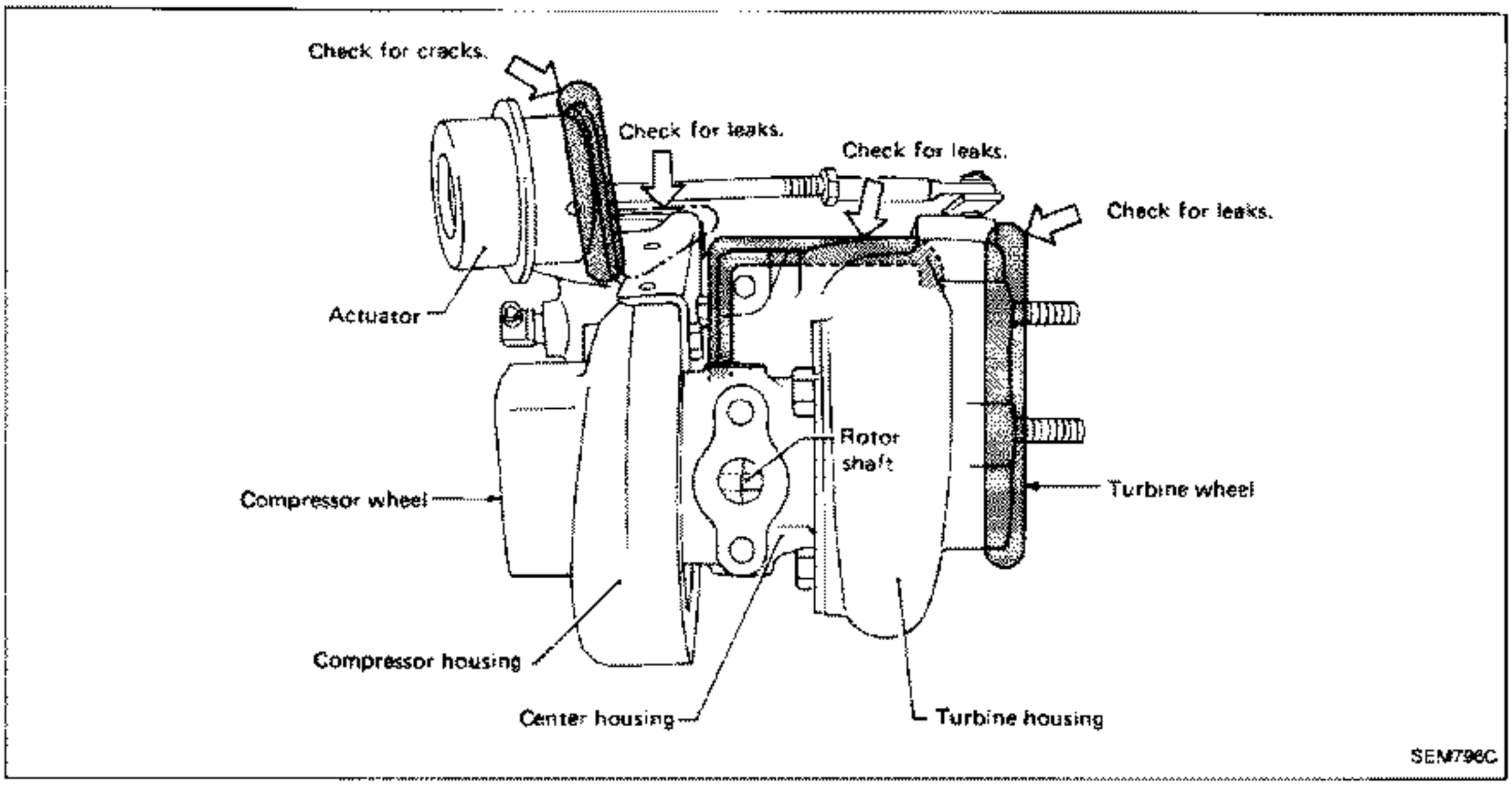

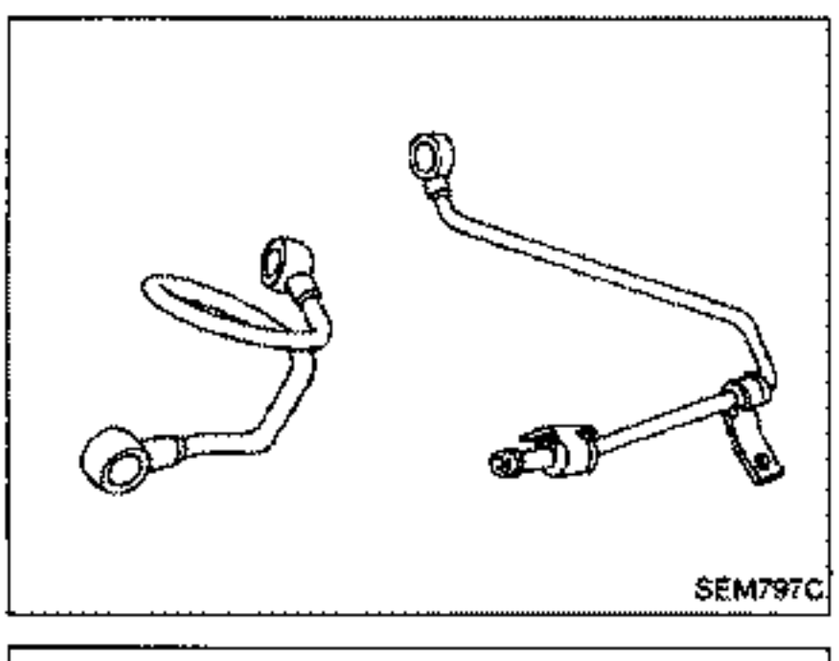

OIL AND WATER TUBES

Check tubes for clogging.

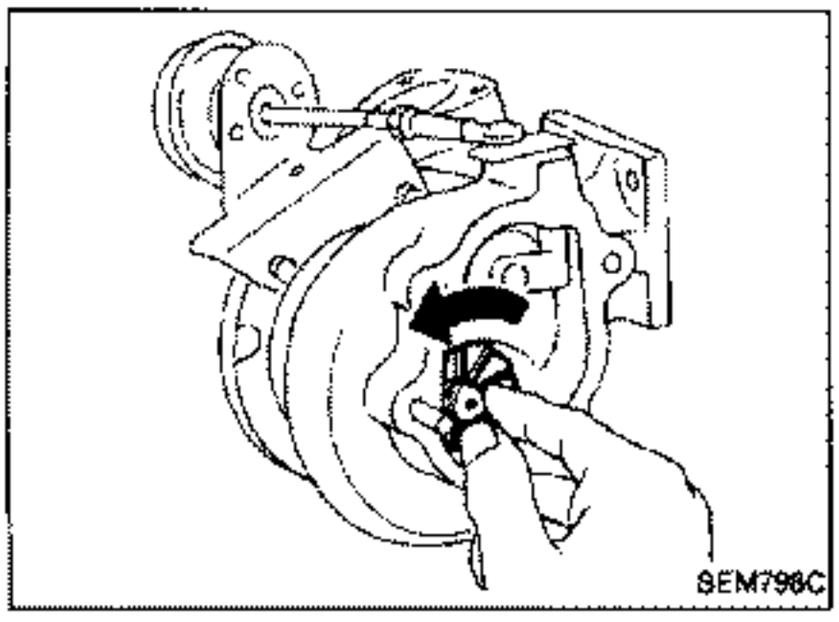

ROTOR SHAFT

1. Check rotor shaft for smooth rotating.

Inspection (Cont'd)

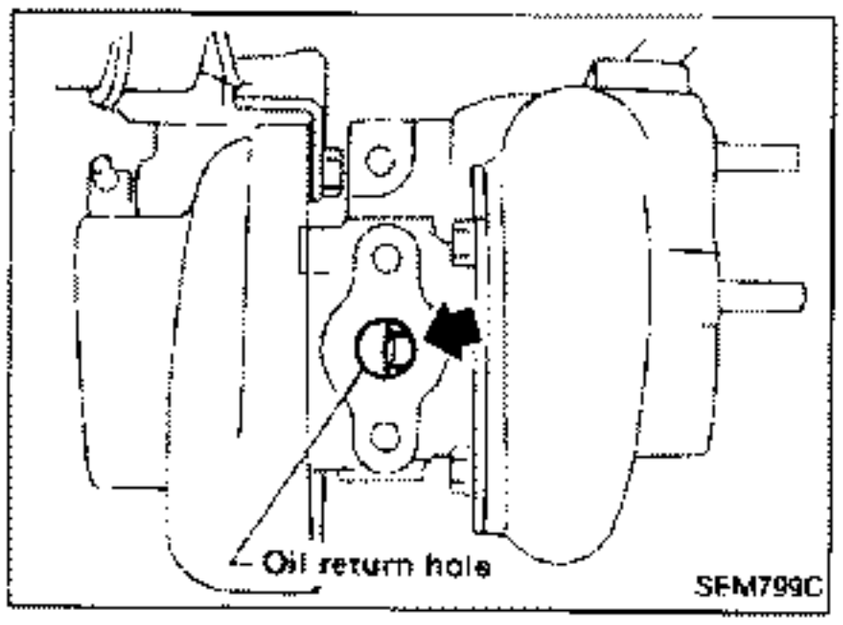

2. Check rotor shaft for carbon deposits.

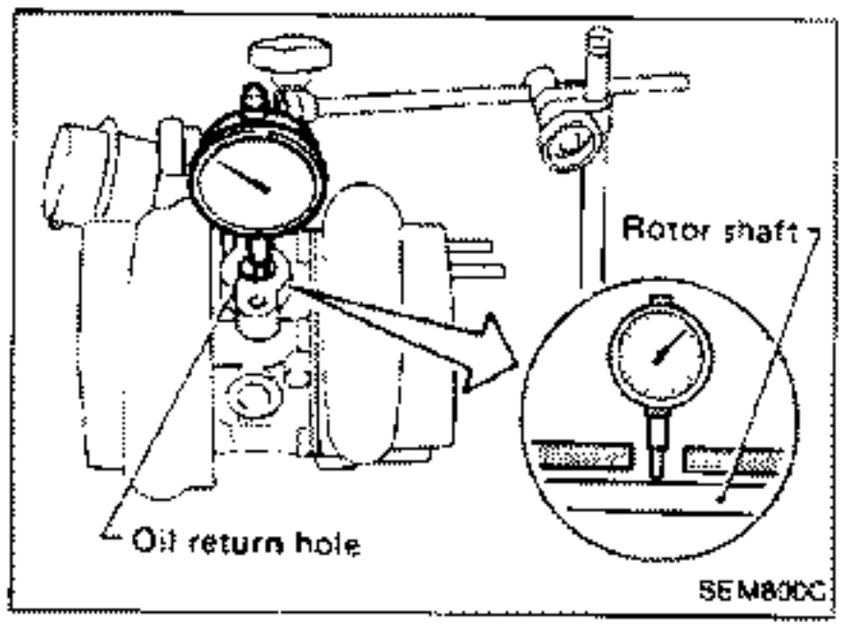

3. Measure runout of rotor shaft.
   Runout (Total indicator reading):
   0.056 - 0.127 mm (0.0022 - 0.0050 in)

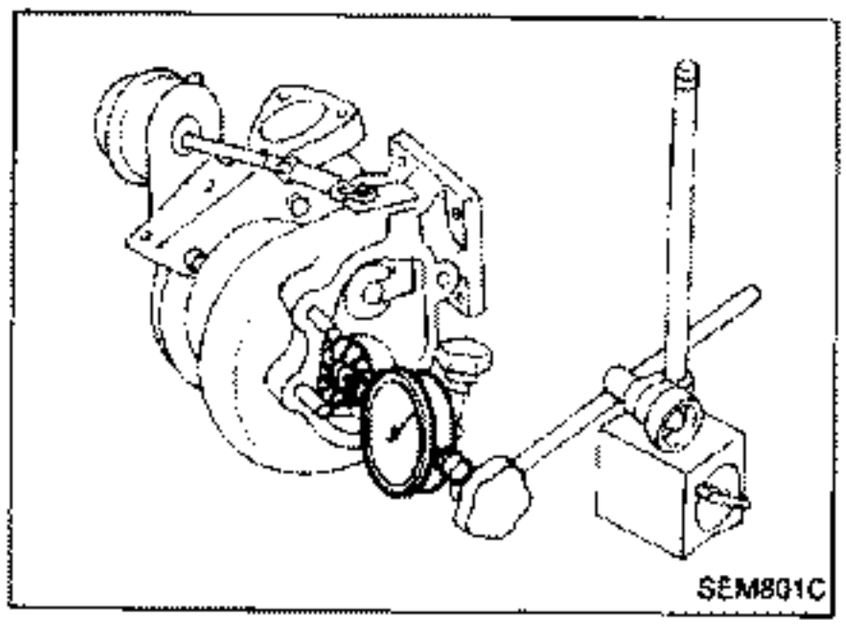

4. Measure end play of rotor shaft.
   End play:
   0.013 - 0.096 mm (0.0005 - 0.0038 in)

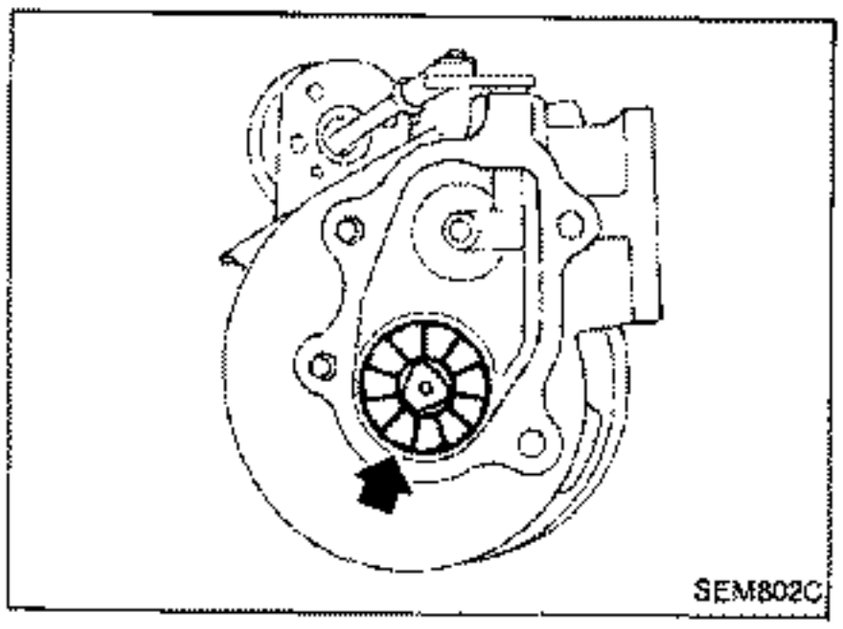

TURBINE WHEEL

Check turbine wheel for the following:

- Oil
- Carbon deposits
- Deformed fins
- Contact with turbine housing

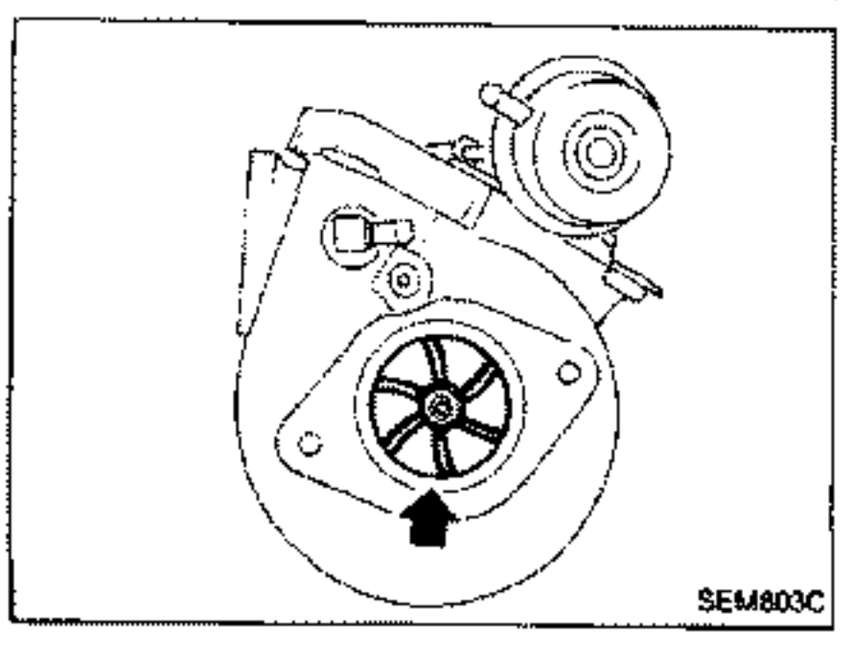

COMPRESSOR WHEEL

Check compressor wheel for the following:

- Oil
- Deformed fins
- Contact with compressor housing

Inspection (Cont'd)

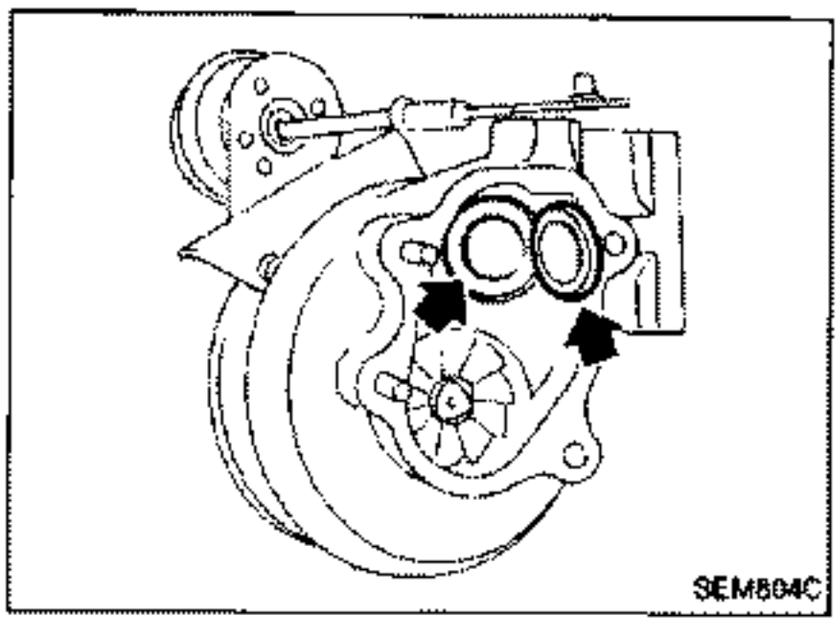

WASTEGATE VALVE

Remove rod pin and check wastegate valve for cracks, deformation and smooth movement.
Check valve seat surface for smoothness.

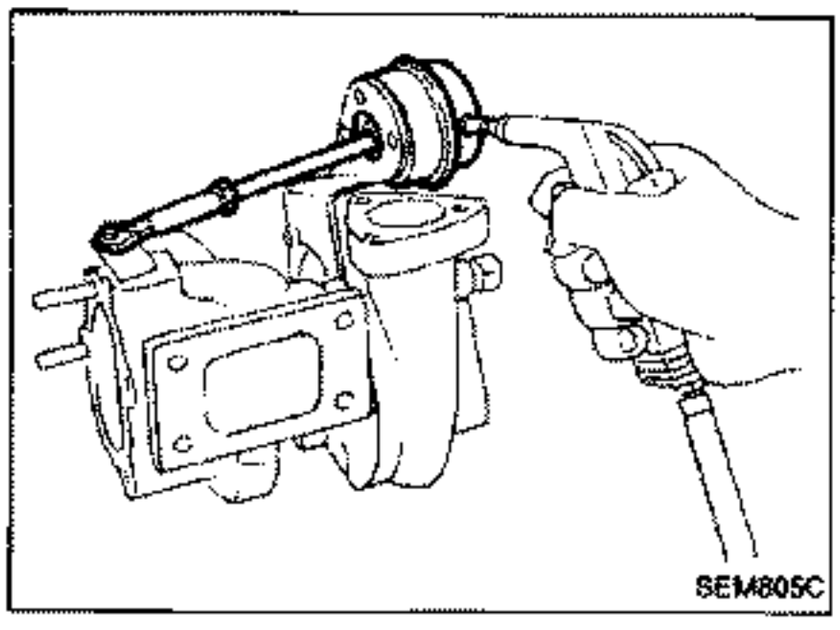

WASTEGATE VALVE ACTUATOR

Apply air pressure to wastegate valve actuator and check it for smooth movement.

- **Do not keep applying air pressure to the actuator.**
- **The air pressure should be in the range of 78 to 88 kPa (0.78 to 0.88 bar, 0.8 to 0.9 kg/cm^2, 11 to 13 psi).**

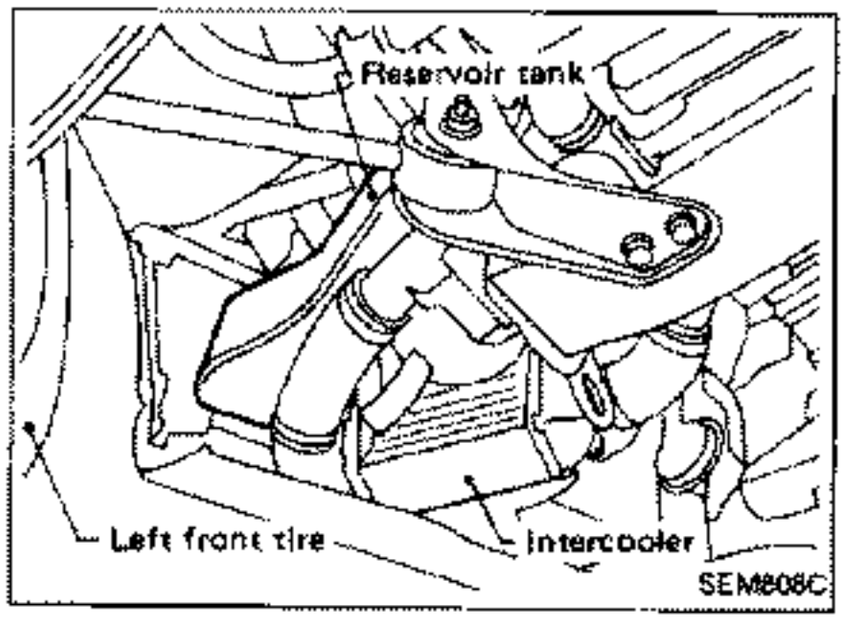

Removal

1. Remove front part of front fender protector.
2. Remove reservoir tank (left intercooler service only).

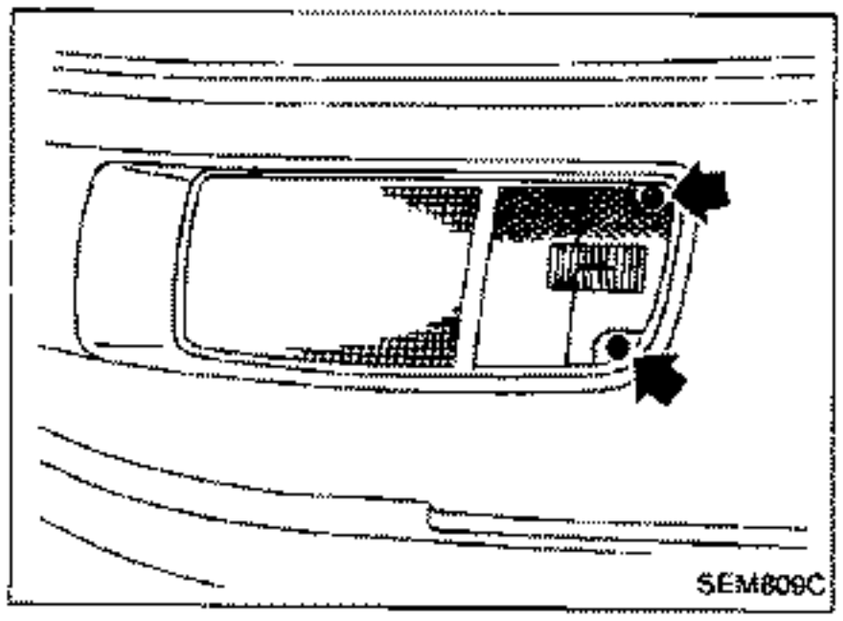

3. Remove front combination lamp.

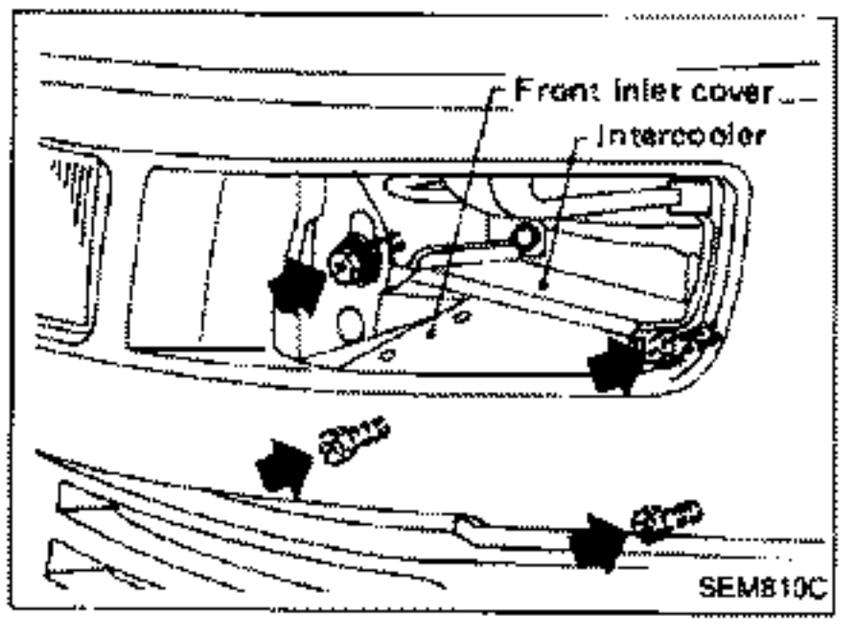

4. Remove bolts fastening intercooler and front inlet cover.

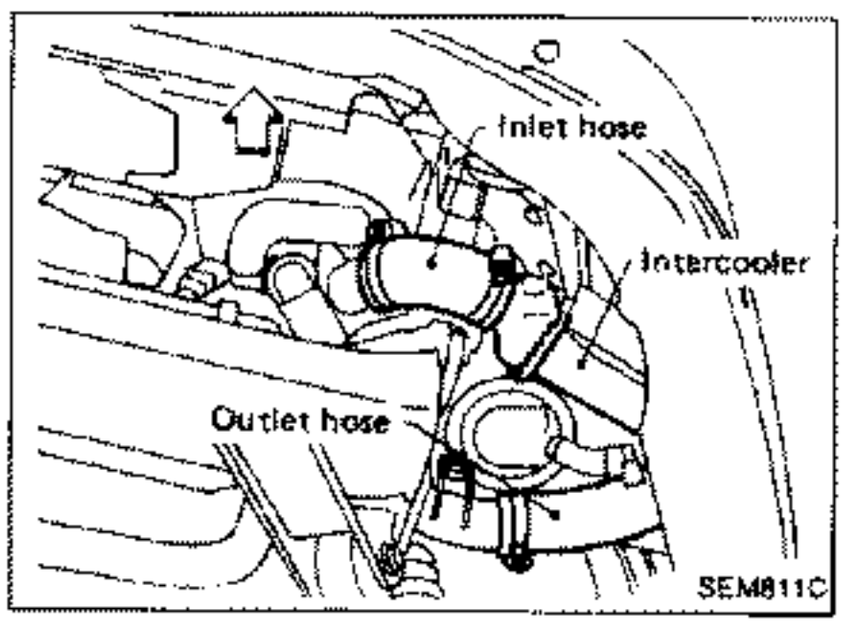

5. Remove inlet and outlet hoses.
6. Remove intercooler unit.

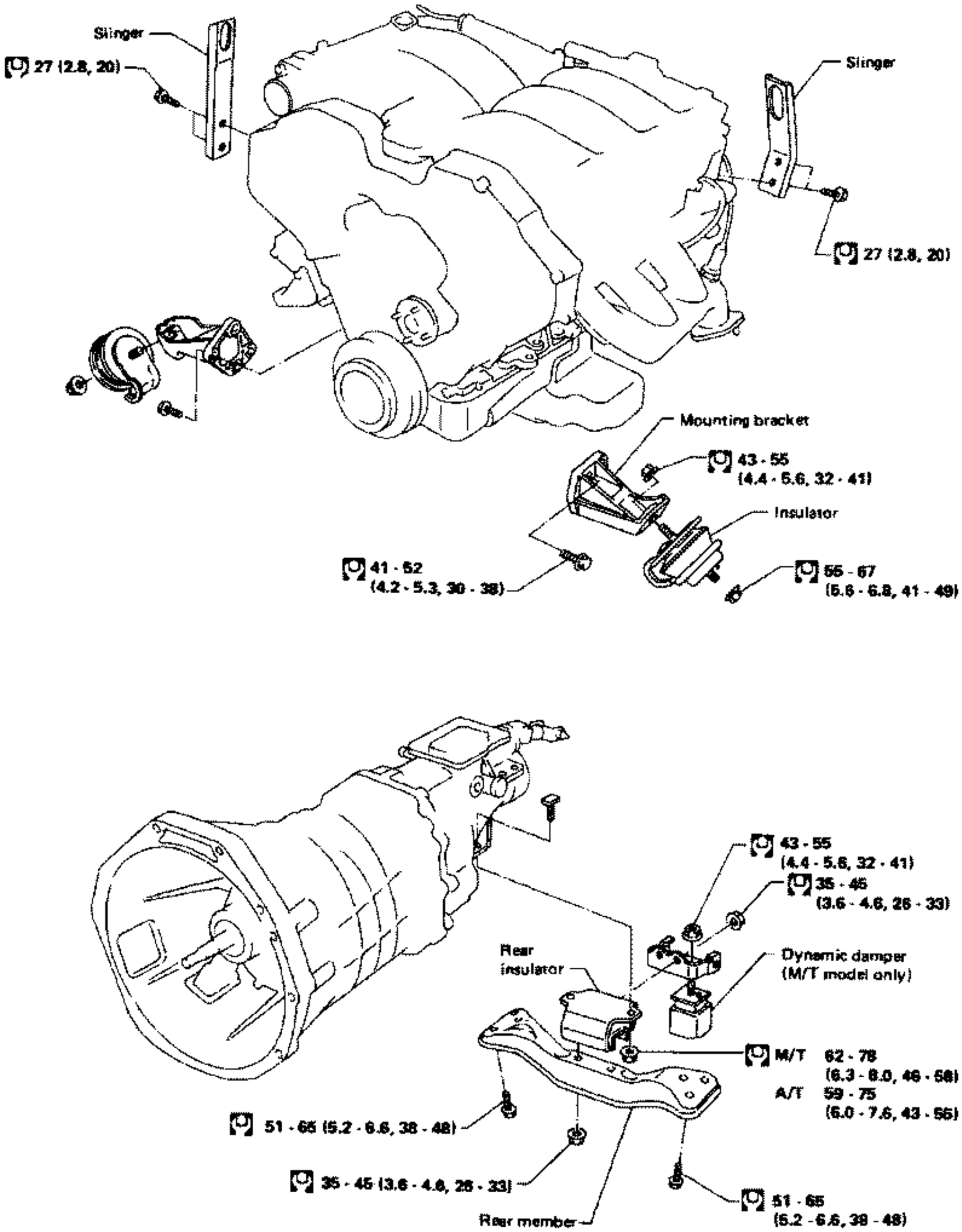

: N·m (kg-m, ft-lb)

SEM621C

WARNING:

a. **Situate vehicle on a flat and solid surface.**
b. **Place chocks at front and back of rear wheels.**
c. **Do not remove engine until exhaust system has completely cooled off. Otherwise, you may burn yourself and/or fire may break out in fuel line.**
d. **For safety during subsequent steps, the tension of wires should be slackened against the engine.**
e. **Before disconnecting fuel hose, release fuel pressure from fuel line.**
   Refer to "Releasing Fuel Pressure" in section EF & EC.
f. **Be sure to hoist engine and transmission in a safe manner.**
g. **For engines not equipped with engine slingers, attach proper slingers and bolts described in PARTS CATALOG.**

CAUTION:

- **When lifting engine, be careful not to strike adjacent parts, especially accelerator wire casing, brake lines, and brake master cylinder.**
- **In hoisting the engine, always use engine slingers in a safe manner.**

M/T model

1. Remove engine under cover and hood.
2. Drain coolant from both cylinder block drain plugs, and radiator drain cock.
3. Drain engine oil from drain plug of oil pan.
4. Remove vacuum hoses, fuel tubes, wires, harnesses and connectors and so on.
5. Remove front exhaust tubes and propeller shaft.

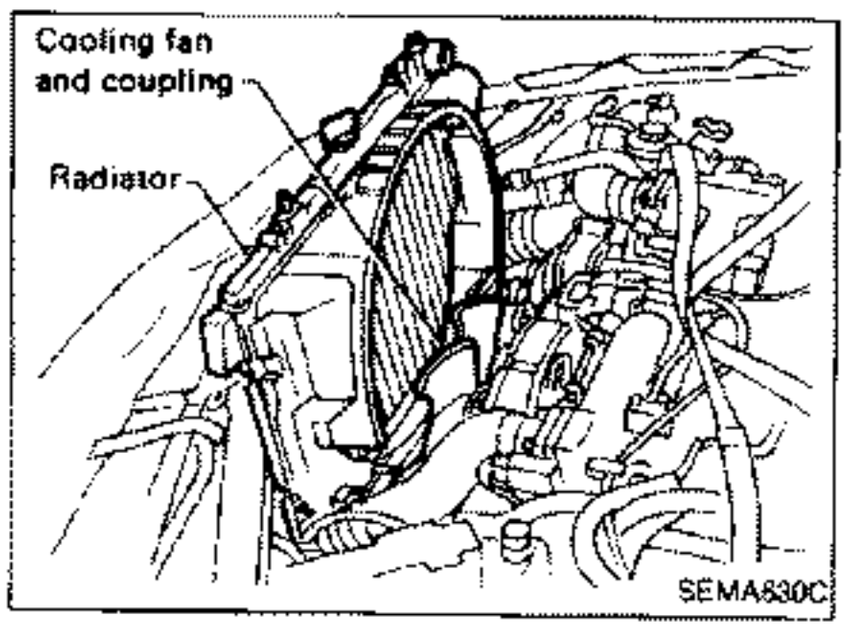

6. Remove radiator.
7. Remove drive belts, cooling fan and coupling.
8. Remove P/S oil pump, alternator, A/C pump from engine, and starter motor, and clutch operating cylinder.

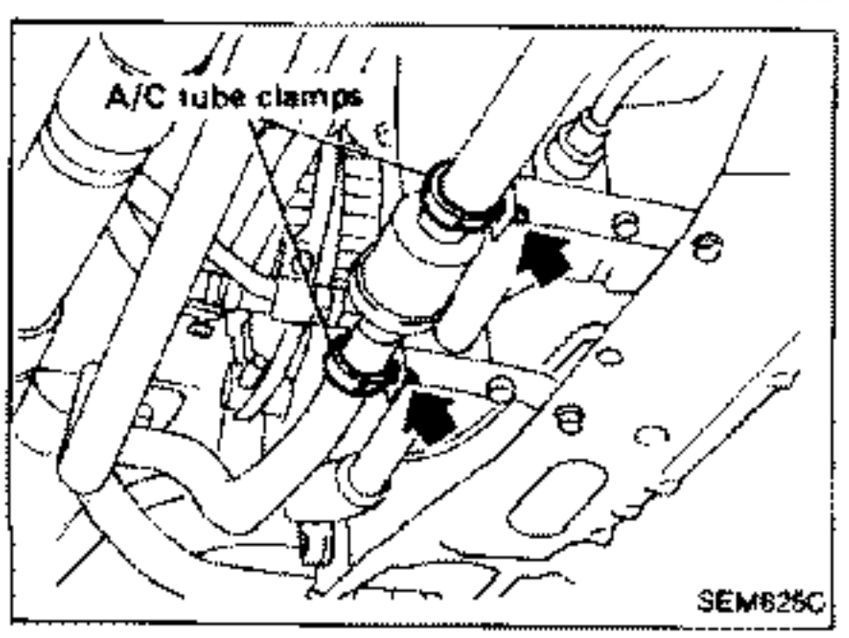

9. Disconnect A/C tube clamps as shown.

M/T model (Cont'd)

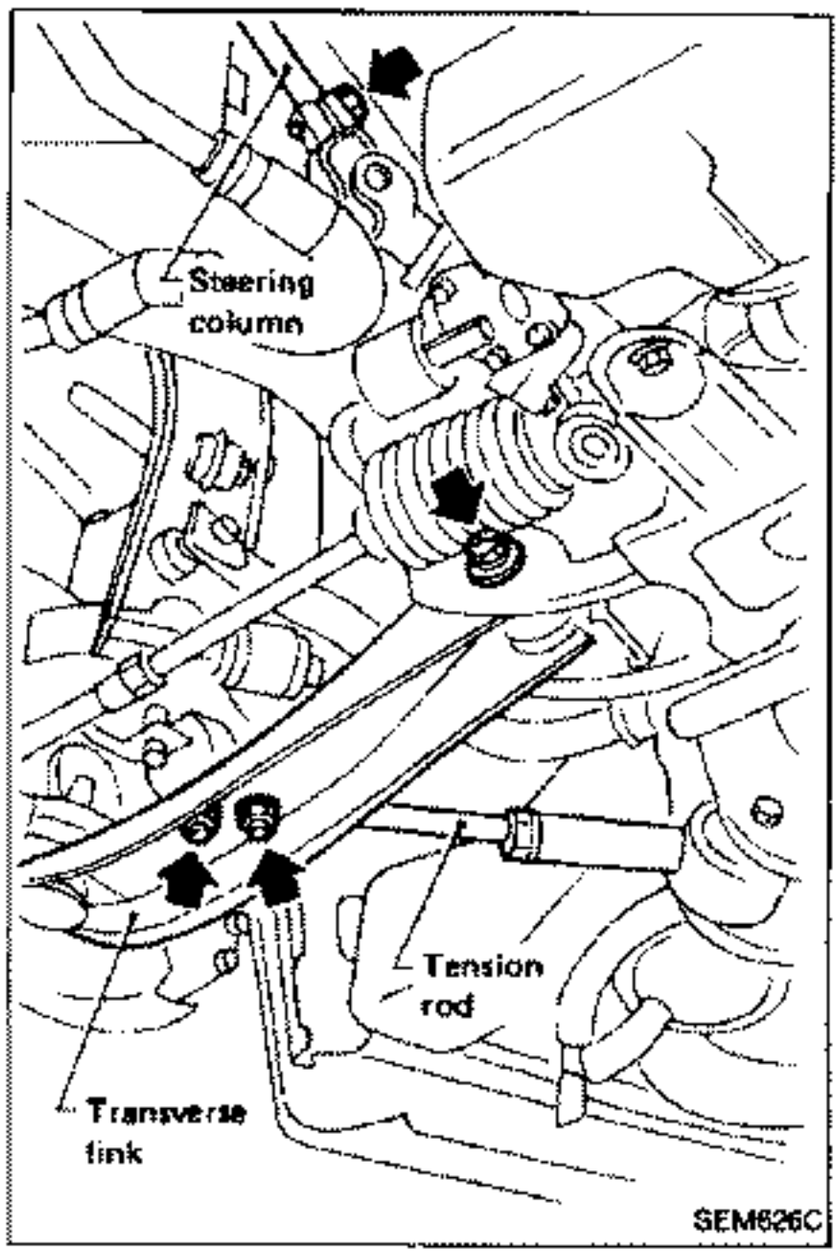

10. Disconnect steering column lower joint.
11. Remove tension rod fixing bolts from both sides.
12. Loosen transverse link bolts on both sides.

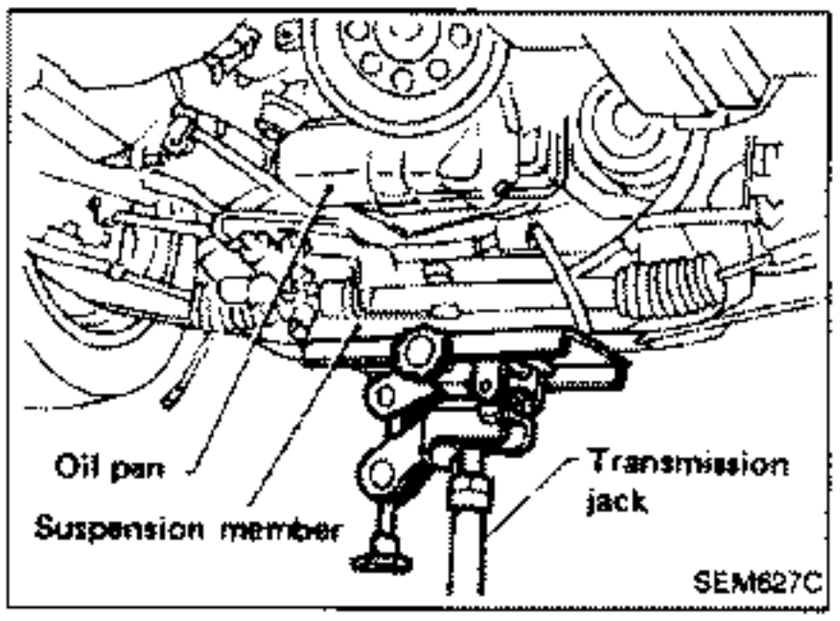

13. Set a suitable transmission jack under suspension member.
- At this time, hoist engine with engine slinger.

14. Remove suspension member fixing bolts.
15. Remove engine mounting bolts from both sides and then slowly lower transmission jack.

M/T model (Cont'd)

16. Remove engine with transmission as shown.

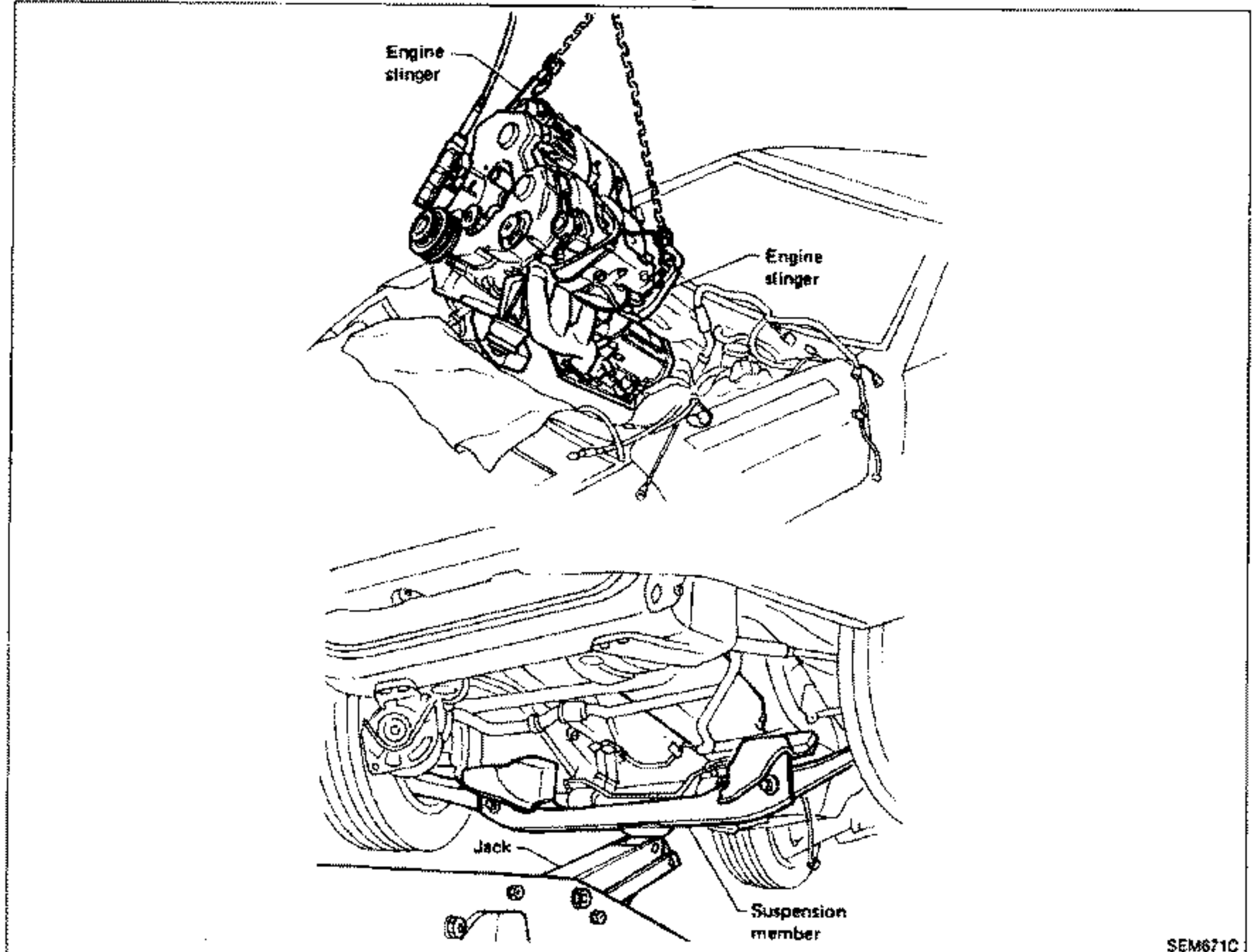

A/T model

1. Perform the same procedures (1 to 8) as for M/T model.
2. Remove transmission from vehicle.

Refer to AT section.

3. Hoist engine with engine slingers and remove engine mounting bolts from both sides.

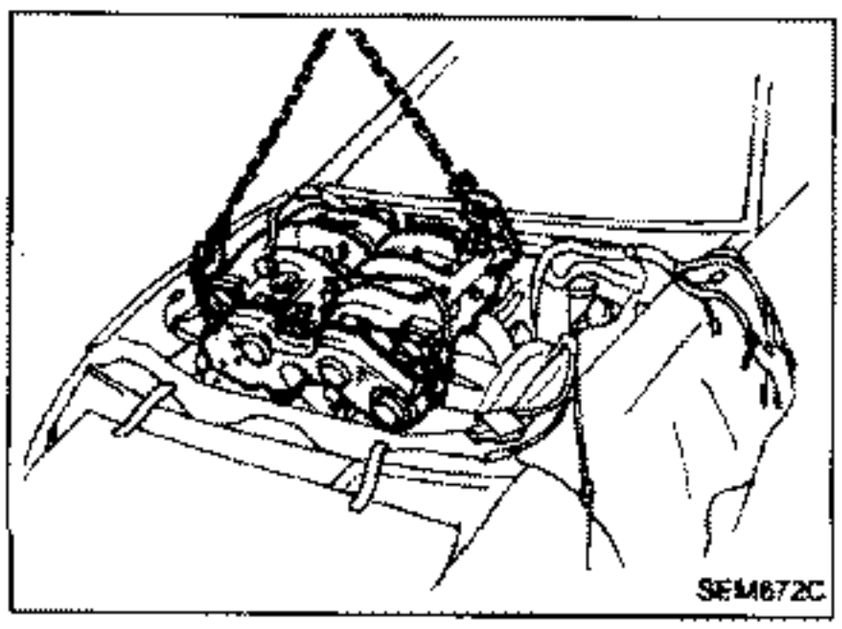

4. Remove engine from vehicle as shown.

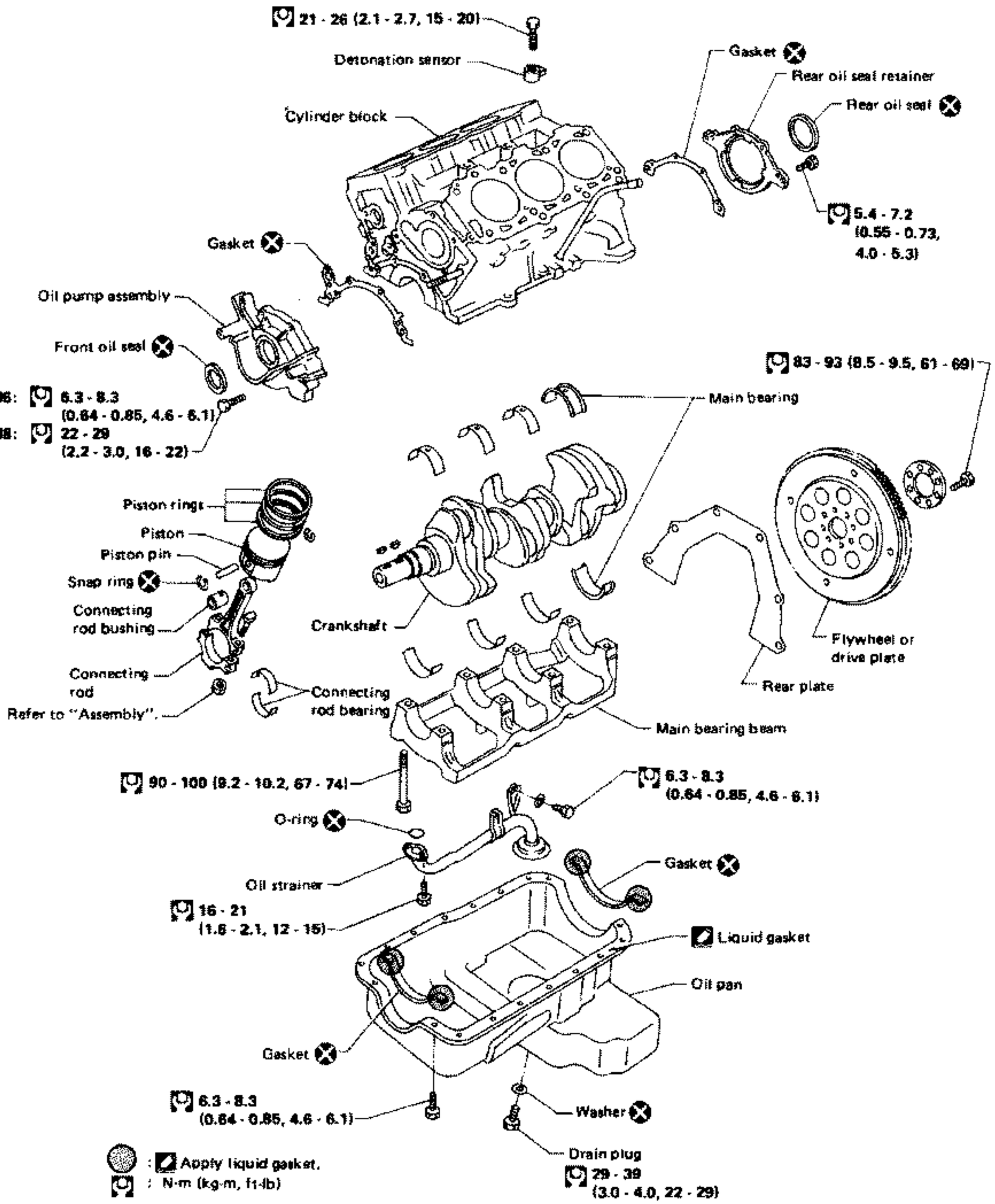
21 - 26 (2.1 - 2.7, 15 - 20)
Detonation sensor
Cylinder block
Gasket
Rear oil seal retainer
Rear oil seal
5.4 - 7.2 (0.55 - 0.73, 4.0 - 5.3)
Gasket
Oil pump assembly
Front oil seal
M6: 6.3 - 8.3 (0.64 - 0.85, 4.6 - 6.1)
M8: 22 - 29 (2.2 - 3.0, 16 - 22)
83 - 93 (8.5 - 9.5, 61 - 69)
Main bearing
Piston rings
Piston
Piston pin
Snap ring
Connecting rod bushing
Connecting rod
Refer to "Assembly".
Crankshaft
Connecting rod bearing
Flywheel or drive plate
Rear plate
Main bearing beam
90 - 100 (9.2 - 10.2, 67 - 74)
6.3 - 8.3 (0.64 - 0.85, 4.6 - 6.1)
O-ring
Oil strainer
Gasket
16 - 21 (1.6 - 2.1, 12 - 15)
Liquid gasket
Oil pan
Gasket
6.3 - 8.3 (0.64 - 0.85, 4.6 - 6.1)
Washer
Drain plug
29 - 39 (3.0 - 4.0, 22 - 29)
: Apply liquid gasket.
: N·m (kg-m, ft-lb)

SEM622C

CAUTION:

- **When installing sliding parts such as bearings and pistons, be sure to apply engine oil on the sliding surfaces.**
- **Place removed parts such as bearings and bearing caps in their proper order and direction.**
- **When tightening connecting rod bolts and main bearing cap bolts, apply engine oil to thread portion of bolts and seating surface of nuts.**

Disassembly

PISTON AND CRANKSHAFT

1. Place engine on a work stand.
2. Remove timing belt.
3. Drain coolant and remove water pump.
4. Drain oil.
5. Remove oil pan, oil pump and rear oil seal retainer.
6. Remove intake manifold collector, intake manifold and cylinder head.

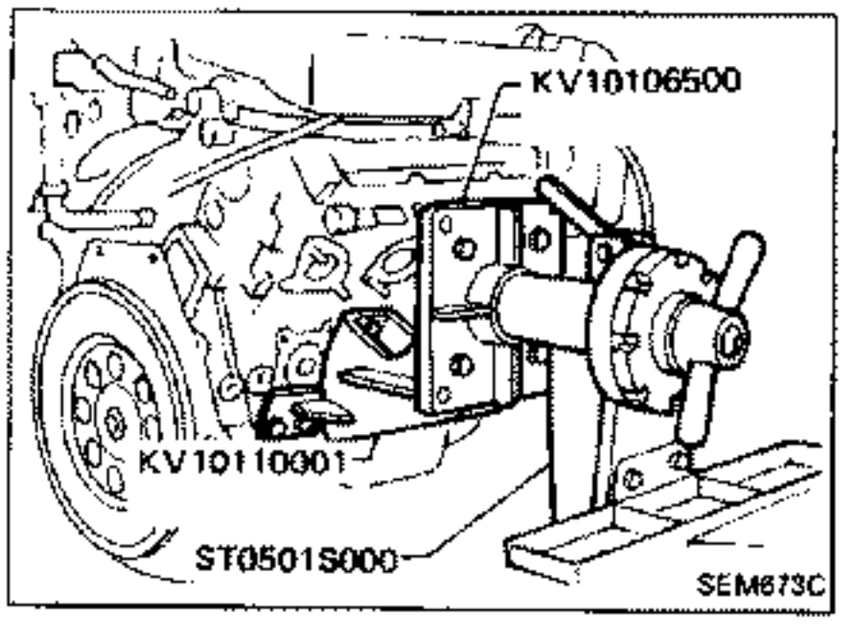

7. Remove pistons.

- When disassembling piston and connecting rod, remove snap ring first, then heat piston to 60 to 70°C (140 to 158°F) or use piston pin press stand at room temperature.

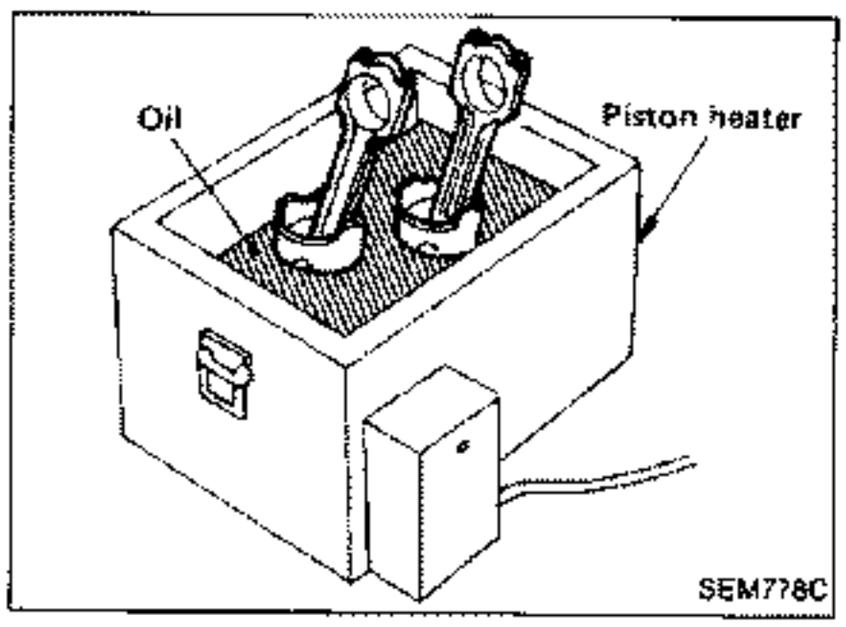

8. Remove bearing cap and crankshaft.

- **Before removing bearing cap, measure crankshaft end play.**
- **Bolts should be loosened in two or three steps.**

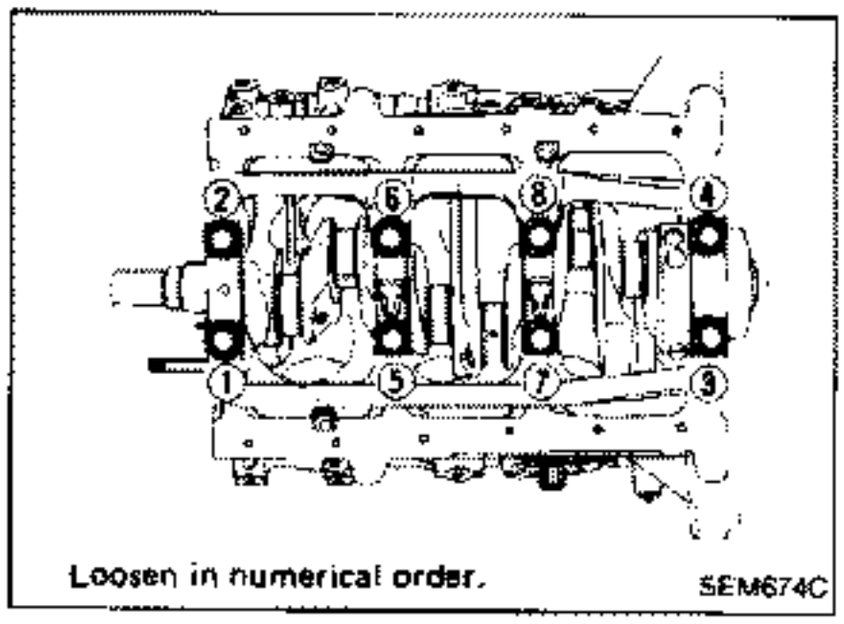

Inspection

PISTON AND PISTON PIN CLEARANCE

- Confirm the fitting of piston pin into piston pin hole by checking if it can be pressed in smoothly by finger pressure at room temperature.

1. Measure inner diameter of piston pin hole "dp".

Standard diameter "dp":
21.987 - 21.999 mm (0.8656 - 0.8661 in)

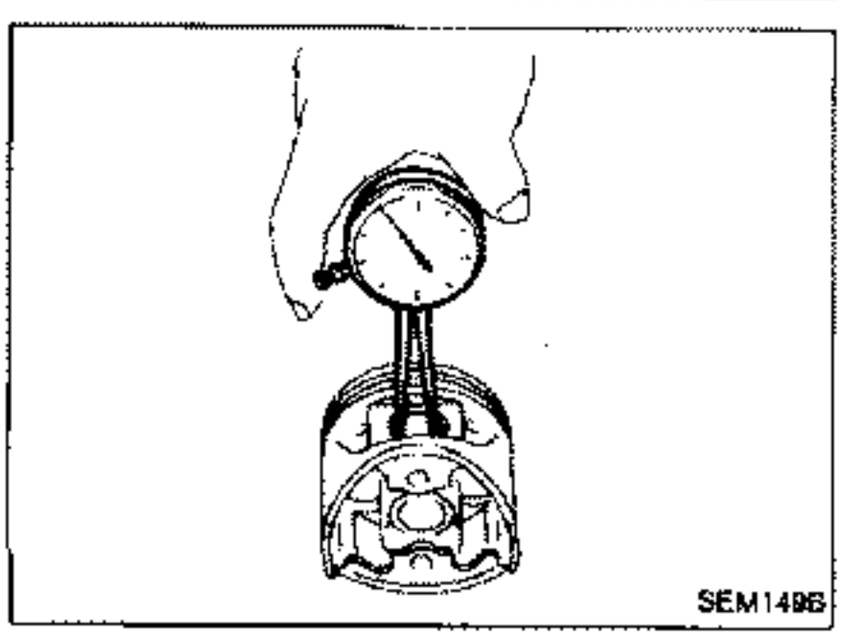

Inspection (Cont'd)

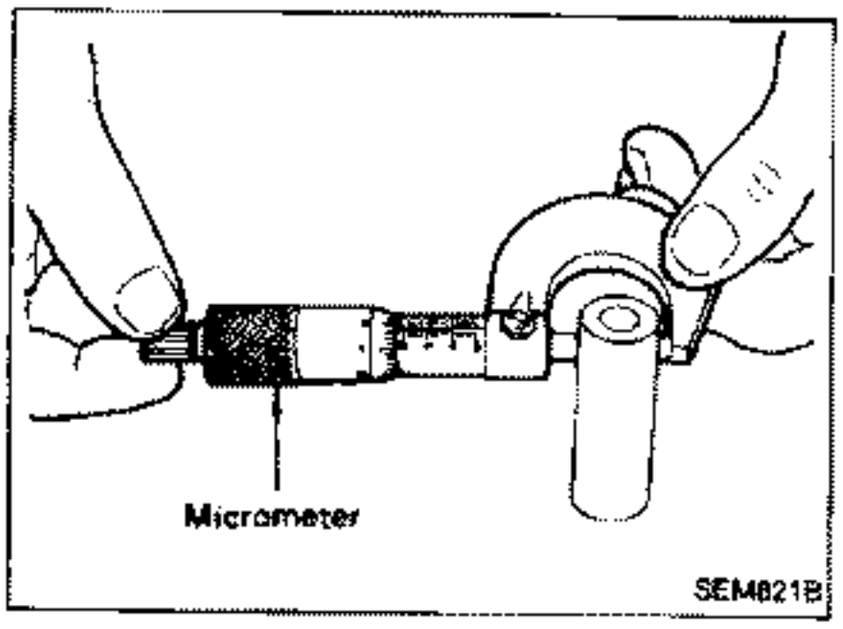

2. Measure outer diameter of piston pin "Dp".
   Standard diameter "Dp":
   21.989 - 22.001 mm (0.8657 - 0.8662 in)
3. Calculate piston pin clearance.
   dp - Dp = -0.004 to 0 mm (-0.0002 to 0 in)

If it exceeds the above value, replace piston assembly with pin.

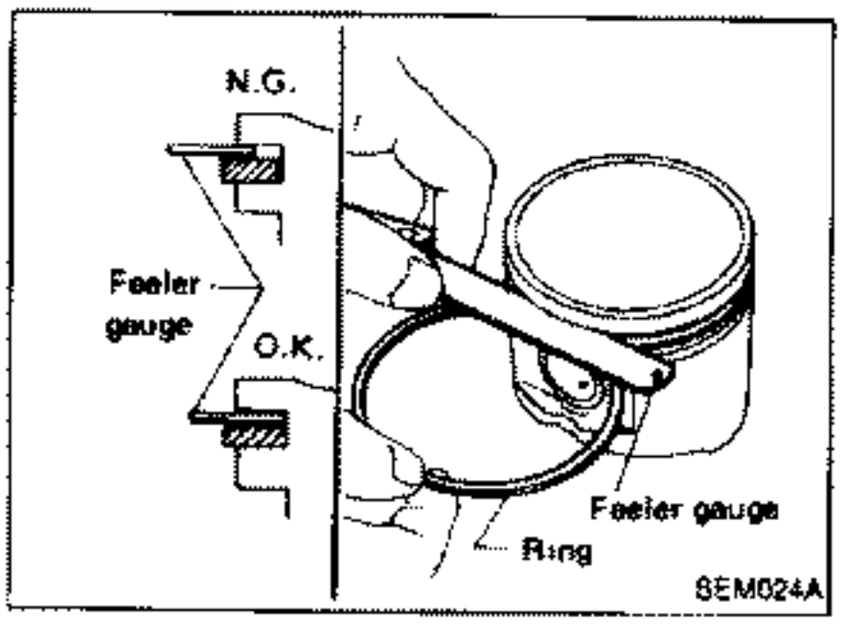

PISTON RING SIDE CLEARANCE

Side clearance:
Top ring
0.040 - 0.073 mm (0.0016 - 0.0029 in)
2nd ring
0.030 - 0.063 mm (0.0012 - 0.0025 in)
Max. limit of side clearance:
0.1 mm (0.004 in)

If out of specification, replace piston and/or piston ring assembly.

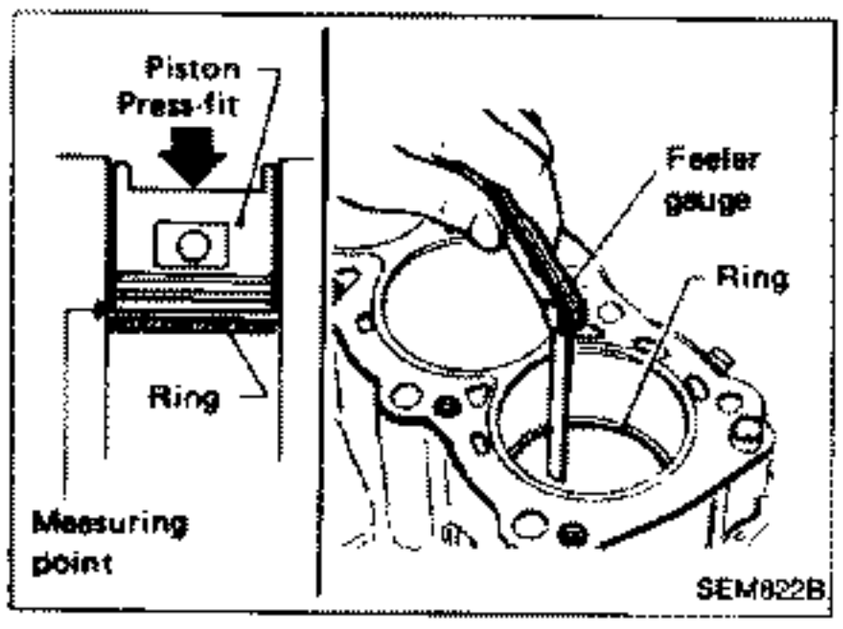

PISTON RING END GAP

End gap:
Top ring
0.21 - 0.40 mm (0.0083 - 0.0157 in)
2nd ring
0.50 - 0.76 mm (0.0197 - 0.0299 in)
Oil ring
0.20 - 0.76 mm (0.0079 - 0.0299 in)
Max. limit of end gap:
1.0 mm (0.039 in)

If out of specification, replace piston ring. If gap still exceeds the limit even with a new ring, rebore cylinder and use oversized piston and piston rings.

Refer to S.D.S.

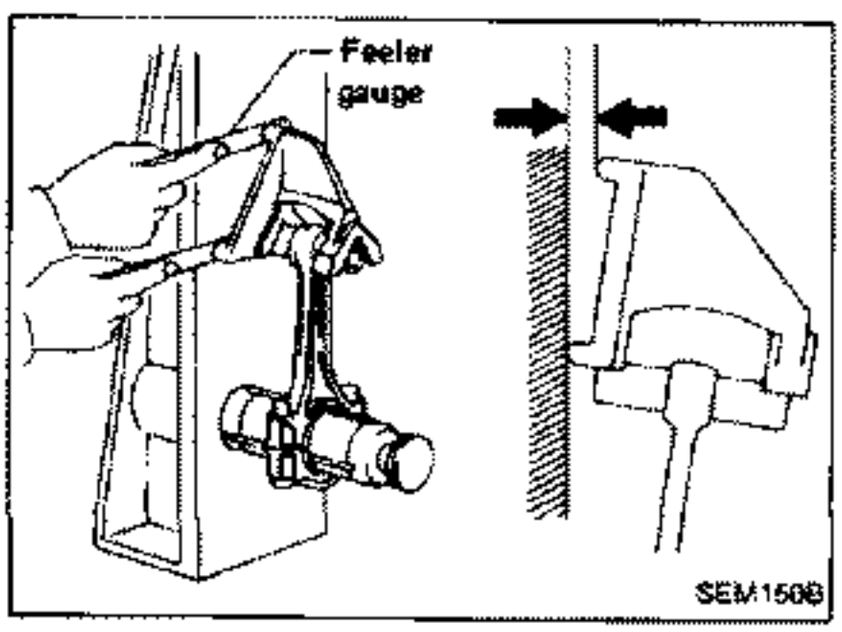

CONNECTING ROD BEND AND TORSION

Bend:
Limit 0.15 mm (0.0059 in) per 100 mm (3.94 in) length
Torsion:
Limit 0.3 mm (0.012 in) per 100 mm (3.94 in) length

If it exceeds the limit, replace connecting rod assembly.

Inspection (Cont'd)

CYLINDER BLOCK DISTORTION AND WEAR

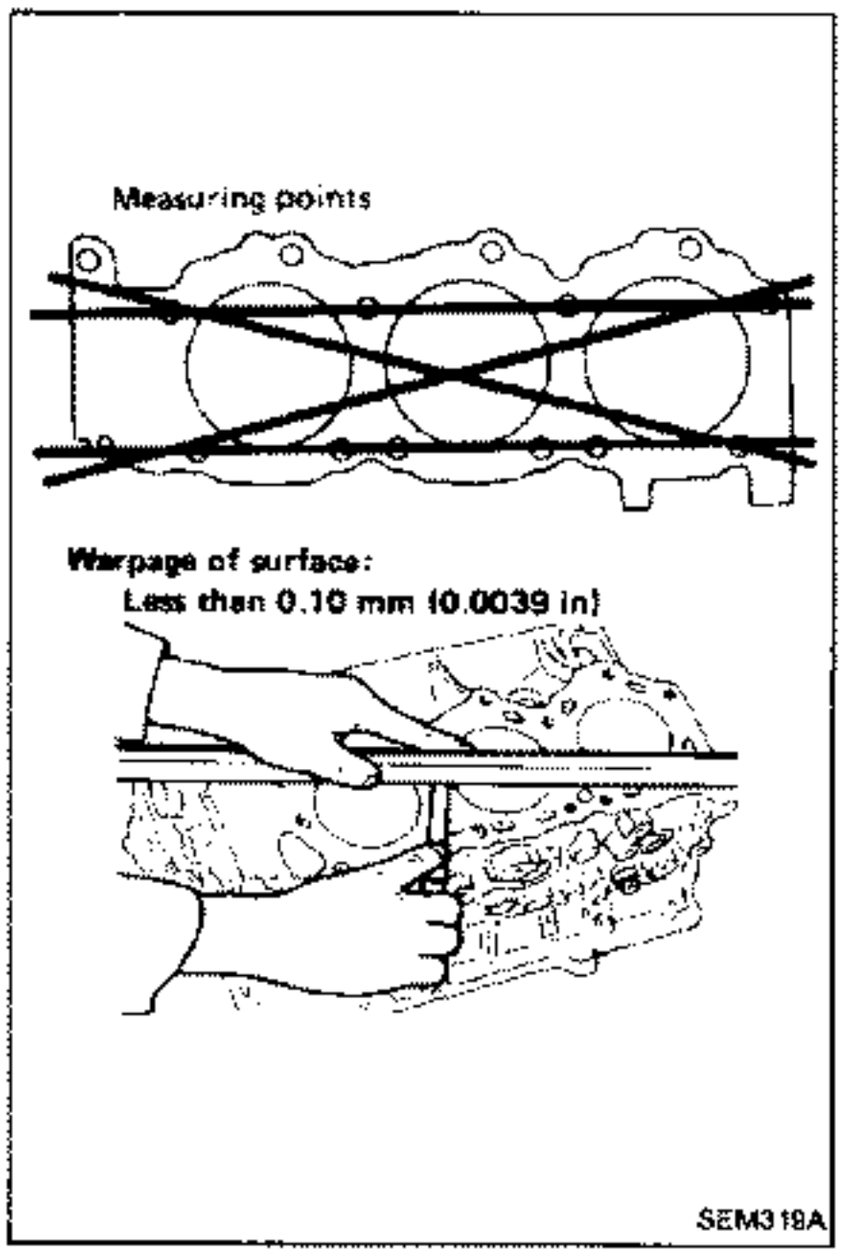

1. Clean upper face of cylinder block and measure the distortion.
   Limit:
   0.10 mm (0.0039 in)
2. If out of specification, resurface it.
   The resurfacing limit is determined by cylinder head resurfacing in engine.

Amount of cylinder head resurfacing is "A".
Amount of cylinder block resurfacing is "B".
The maximum limit is as follows:
A + B = 0.2 mm (0.008 in)

3. If necessary, replace cylinder block.

PISTON-TO-BORE CLEARANCE

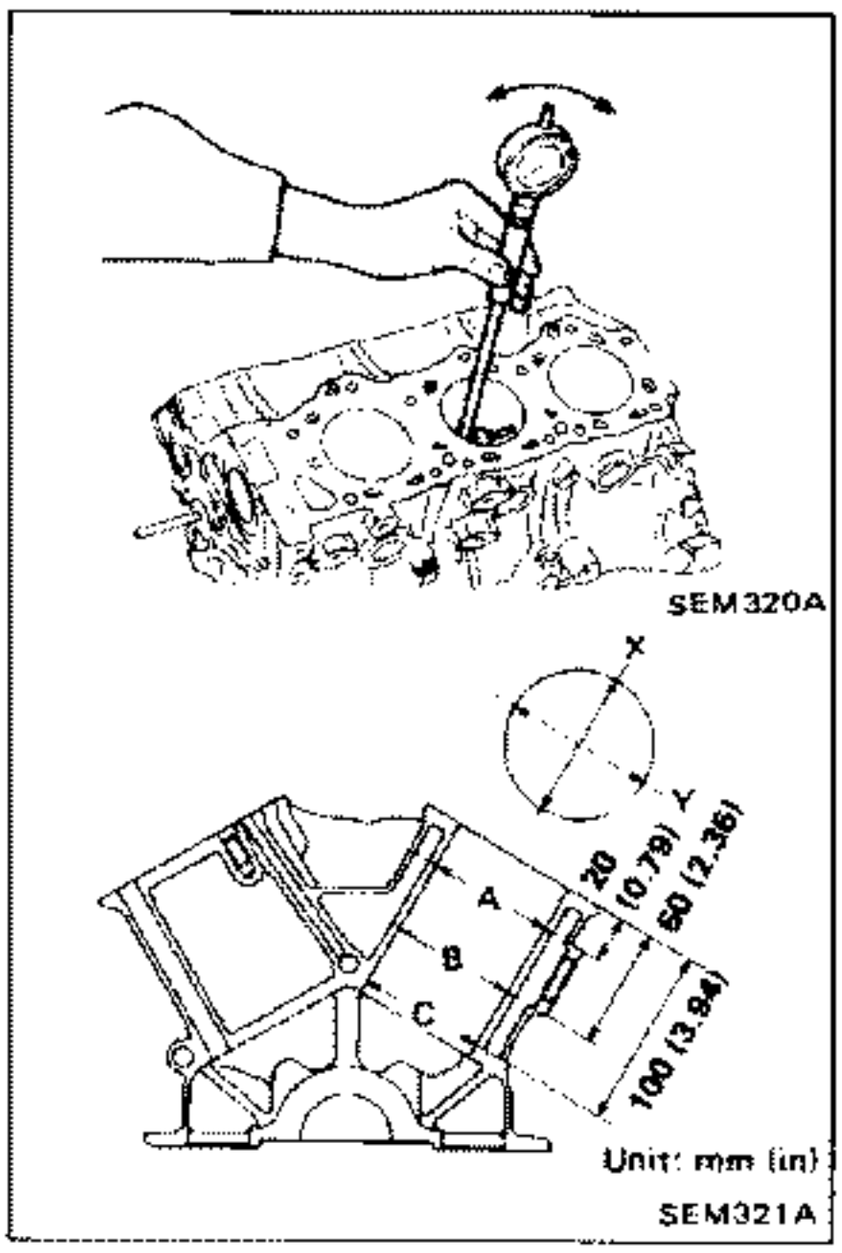

Method A (Using bore gauge and micrometer)

1. Using a bore gauge, measure cylinder bore for wear, out-of-round and taper.
   Standard inner diameter:
   87.000 - 87.030 mm (3.4252 - 3.4264 in)
   Wear limit:
   0.20 mm (0.0079 in)
   Out-of-round (X - Y) limit:
   0.015 mm (0.0006 in)
   Taper (A - B - C) limit:
   0.010 mm (0.0004 in)

If it exceeds the limit, rebore all cylinders. Replace cylinder block if necessary.

2. Check for scratches and seizure. If seizure is found, hone it.

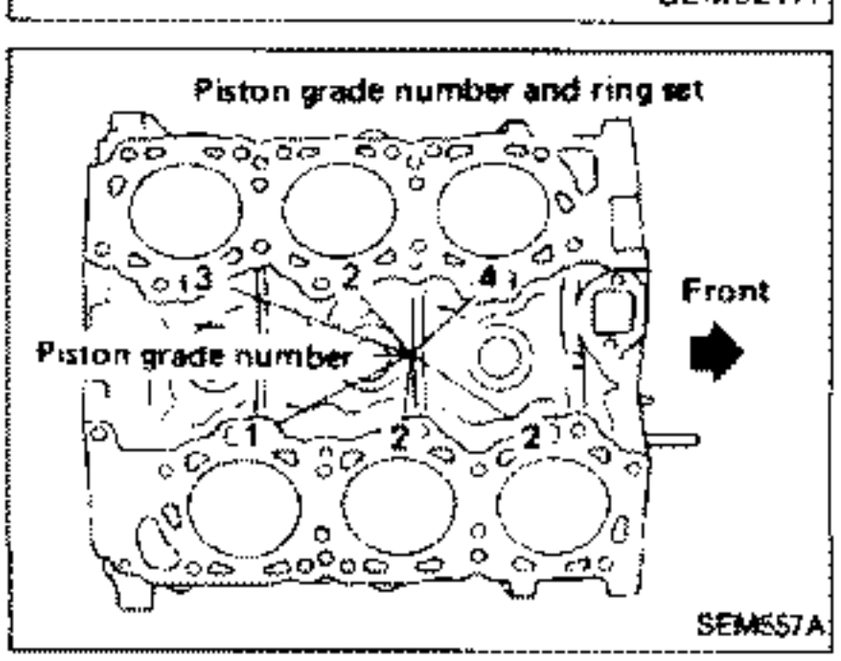

- **If both cylinder block and piston are replaced with new ones, select piston of the same grade number punched on cylinder block upper surface.**

Inspection (Cont'd)

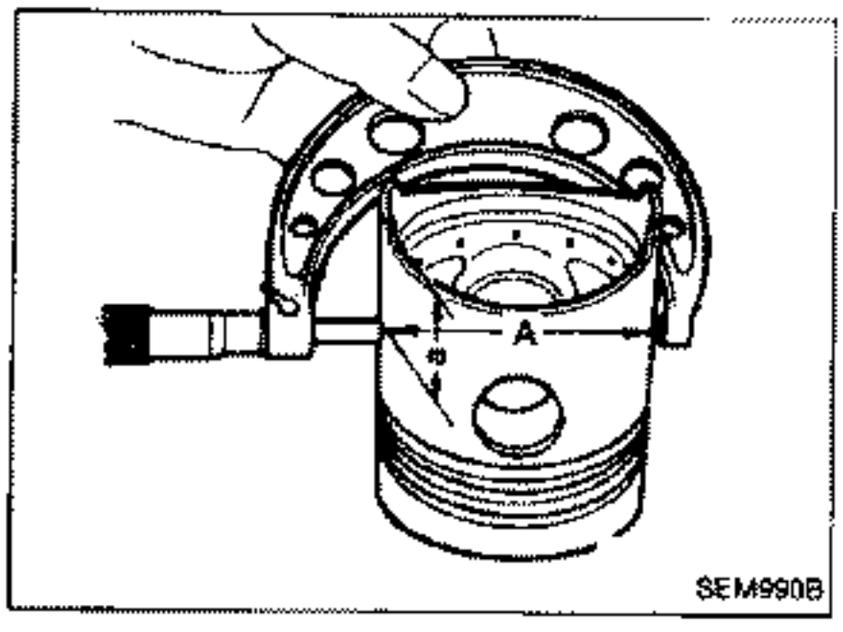

3. Measure piston skirt diameter.
   Piston diameter "A":
   Refer to S.D.S.
   Measuring point "a" (Distance from the bottom):
   11.5 mm (0.453 in)
4. Check that piston-to-bore clearance is within specification.
   Piston-to-bore clearance "B":
   Non-turbo
   0.015 - 0.035 mm (0.0006 - 0.0014 in)
   Turbo
   0.025 - 0.045 mm (0.0010 - 0.0018 in)

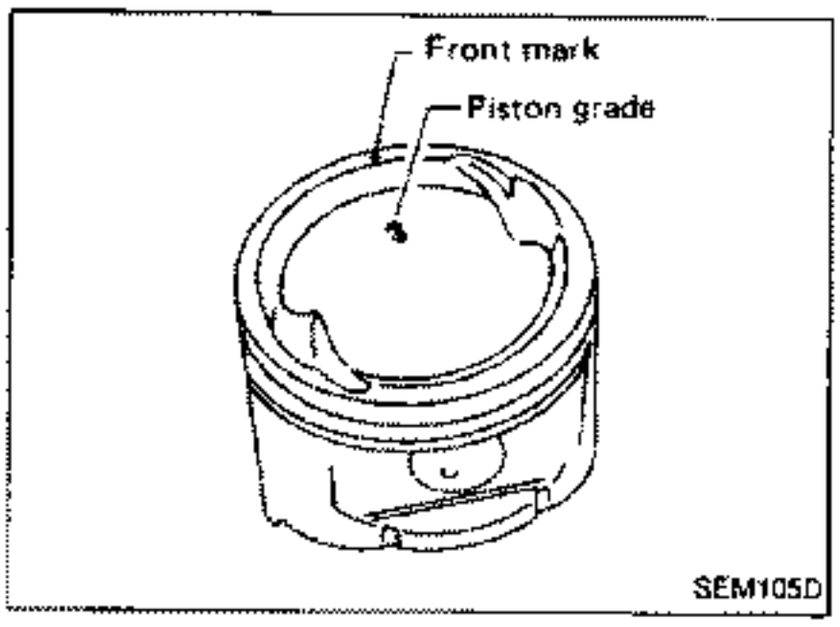

5. Determine piston oversize according to amount of cylinder wear.

Oversize pistons are available for service. Refer to S.D.S.

6. Cylinder bore size is determined by adding piston-to-bore clearance to piston diameter "A".
   Rebored size calculation:
   D = A + B – C
   where,
   D: Bored diameter
   A: Piston diameter as measured
   B: Piston-to-bore clearance
   C: Honing allowance 0.02 mm (0.0008 in)
7. Install main bearing caps, and tighten to the specified torque to prevent distortion of cylinder bores in final assembly.
8. Cut cylinder bores.
   - **When any cylinder needs boring, all other cylinders must also be bored.**
   - **Do not cut too much out of cylinder bore at a time. Do not cut more than 0.05 mm (0.0020 in) in diameter at a time.**
9. Hone cylinders to obtain specified piston-to-bore clearance.
10. Measure finished cylinder bore for out-of-round and taper.
    - **Measurement should be done after cylinder bore cools down.**

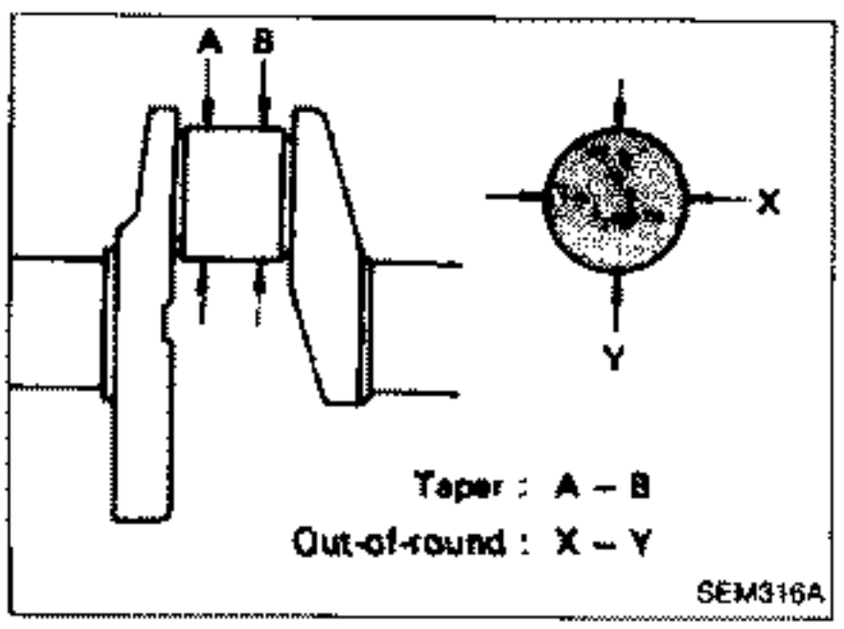

CRANKSHAFT

1. Check crankshaft main and pin journals for score, wear or cracks.
2. With a micrometer, measure journals for taper and out-of-round.
   Out-of-round (X – Y):
   Less than 0.005 mm (0.0002 in)
   Taper (A – B):
   Less than 0.005 mm (0.0002 in)

Inspection (Cont'd)

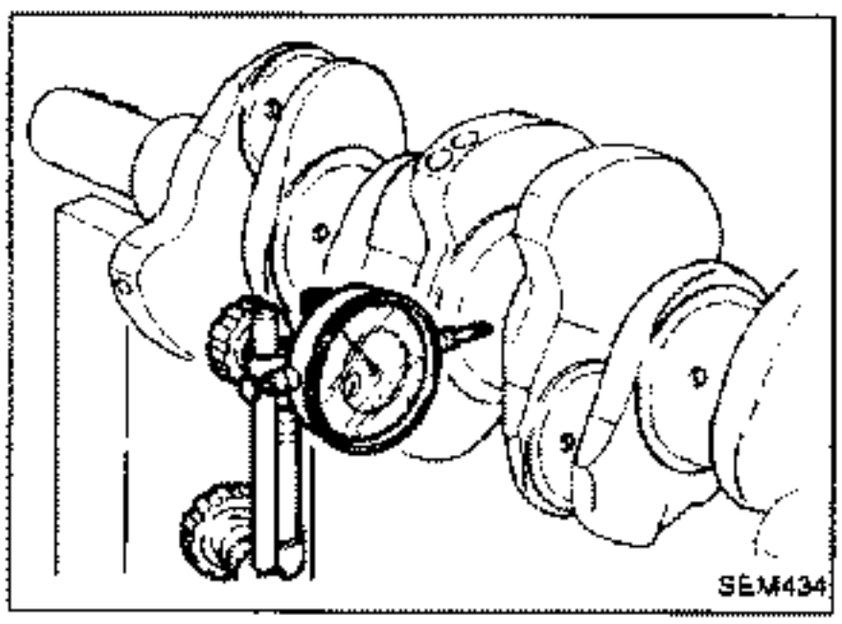

3. Measure crankshaft runout.
   Runout (Total indicator reading):
   Less than 0.10 mm (0.0039 in)

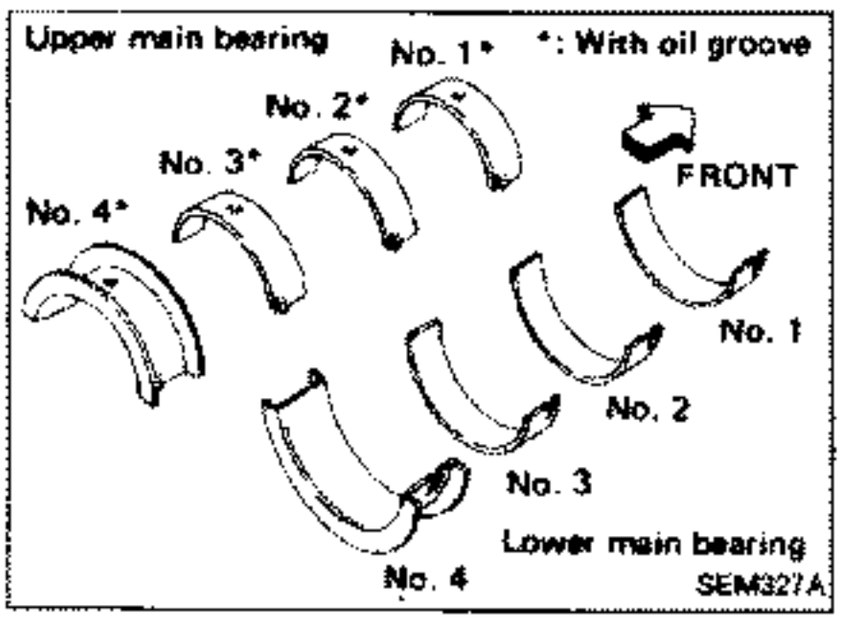

BEARING CLEARANCE

- Either of the following two methods may be used; however, method "A" gives more reliable results and is preferable.

Method A (Using bore gauge & micrometer)

Main bearing

1. Set main bearings in their proper positions on cylinder block and main bearing cap.

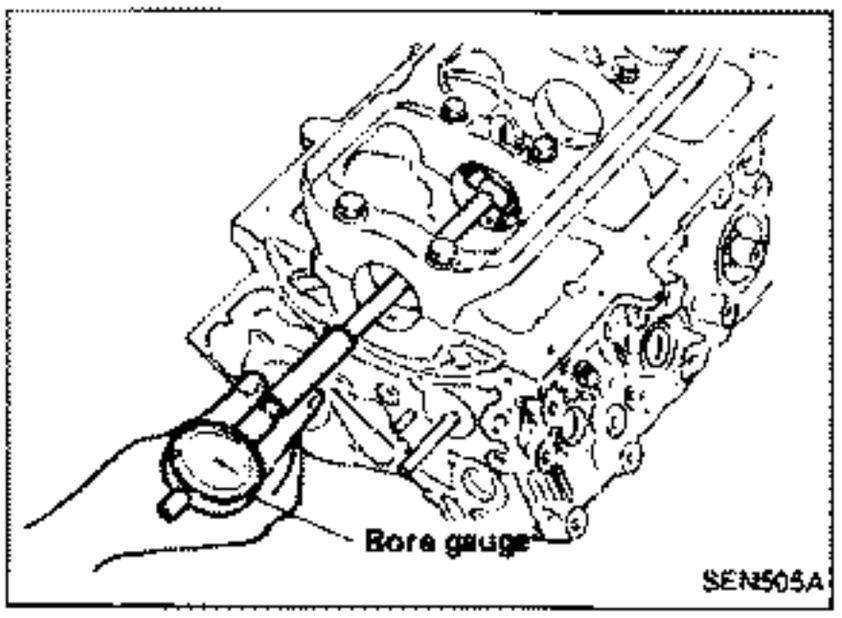

2. Install main bearing cap to cylinder block.

Tighten all bolts in correct order in two or three stages.

3. Measure inner diameter "A" of each main bearing.

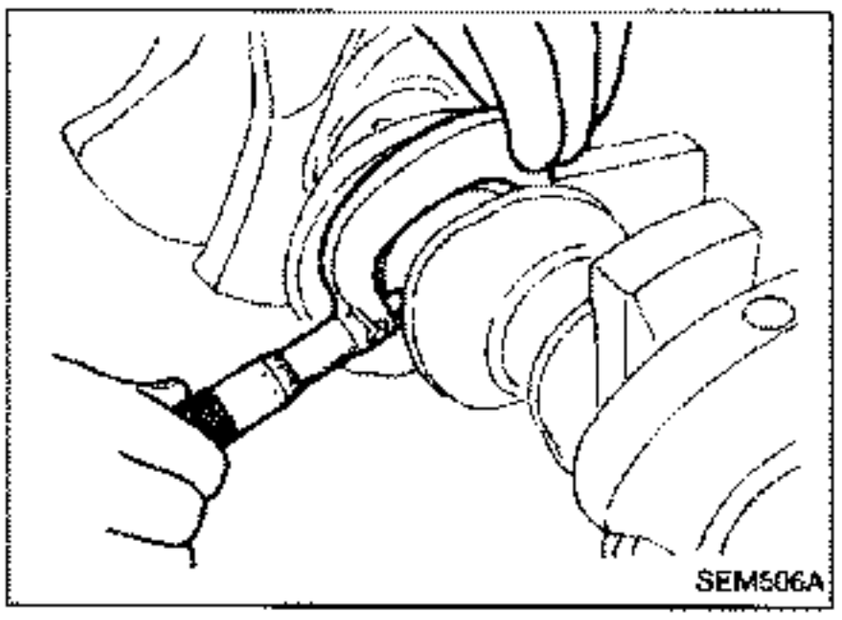

4. Measure outer diameter "Dm" of each crankshaft main journal.
5. Calculate main bearing clearance.
   Main bearing clearance (A - Dm):
   Standard
   0.028 - 0.055 mm (0.0011 - 0.0022 in)
   Limit
   0.090 mm (0.0035 in)
6. If it exceeds the limit, replace bearing.
7. If clearance cannot be adjusted within the standard of any bearing, grind crankshaft journal and use undersized bearing.

Z.ONE.DATSUN

Inspection (Cont'd)

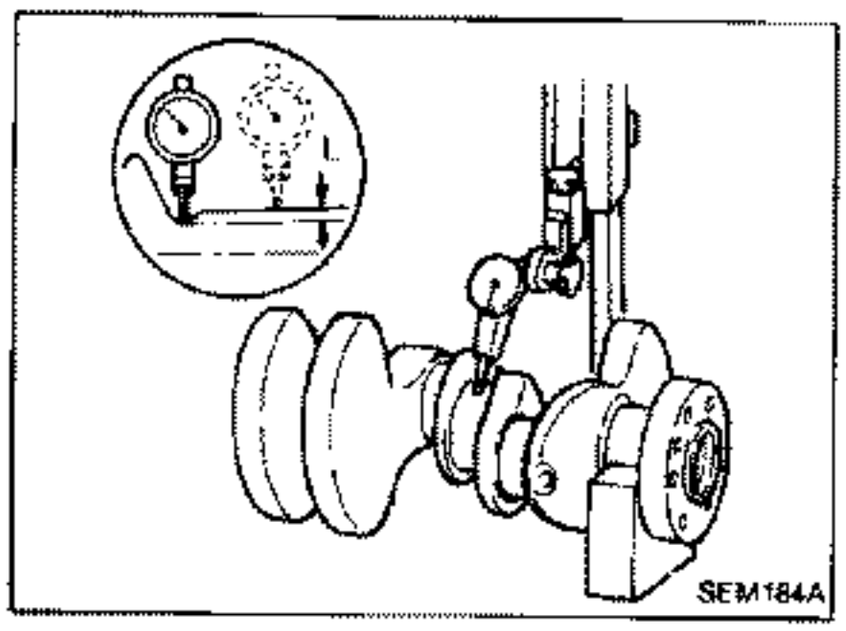

a. When grinding crankshaft journal, confirm that "L" dimension in fillet roll is more than the specified limit.
   "L": 0.1 mm (0.004 in)
b. Refer to S.D.S. for grinding crankshaft and available service parts.

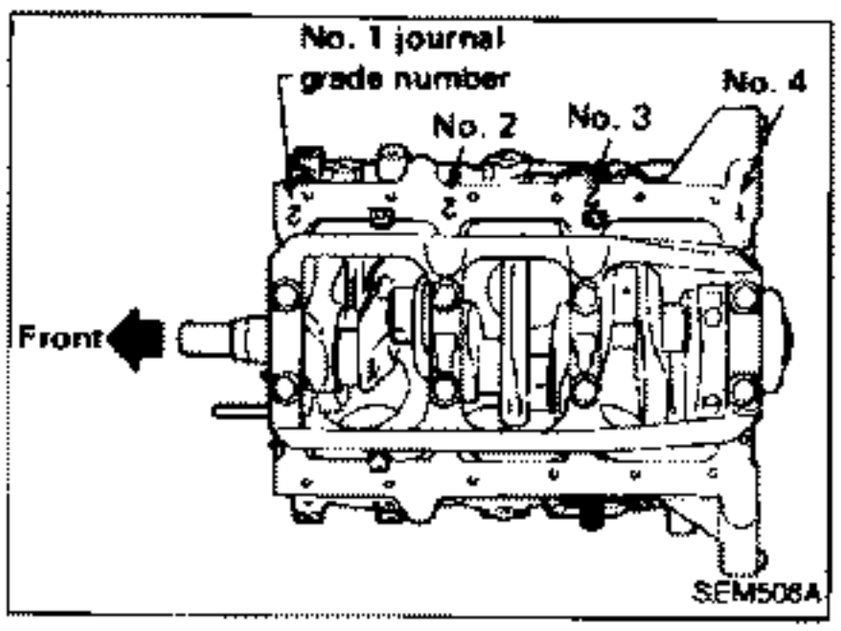

8. If crankshaft, cylinder block or main bearing is reused again, measure main bearing clearance.
   If crankshaft, cylinder block and main bearings are replaced with new ones, it is necessary to select thickness of main bearings as follows:
a. Grade number of each cylinder block main journal is punched on the respective cylinder block.

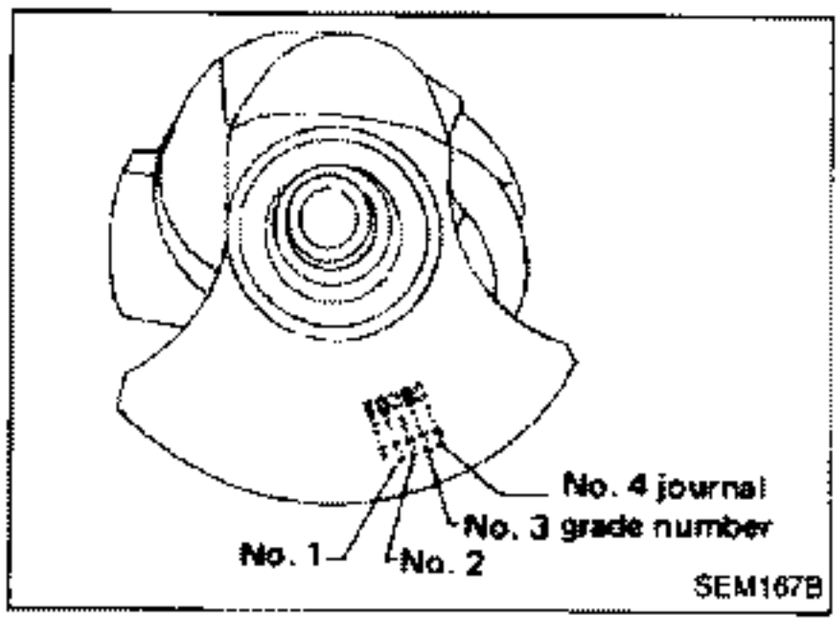

b. Grade number of each crankshaft main journal is punched on the No. 1 counter weight of crankshaft.

c. Select main bearing with suitable thickness according to the following table.

Main bearing grade number:

Crankshaft journal grade number \ Main journal grade number	0	1 (I)	2 (II)
0	0	1	2
1 (I)	1	2	3
2 (II)	2	3	4

For example:
Main journal grade number: 1
Crankshaft journal grade number: 2
Main bearing grade number = 1 + 2
= 3

Inspection (Cont'd)

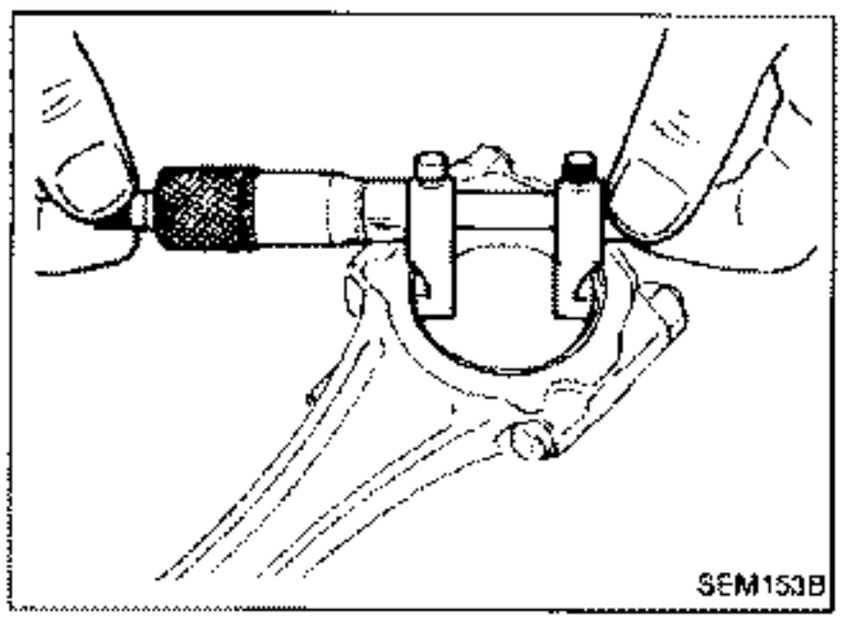

Connecting rod bearing (Big end)

1. Install connecting rod bearing to connecting rod and cap.
2. Install connecting rod cap to connecting rod.

Tighten bolts to the specified torque.

3. Measure inner diameter "C" of each bearing.

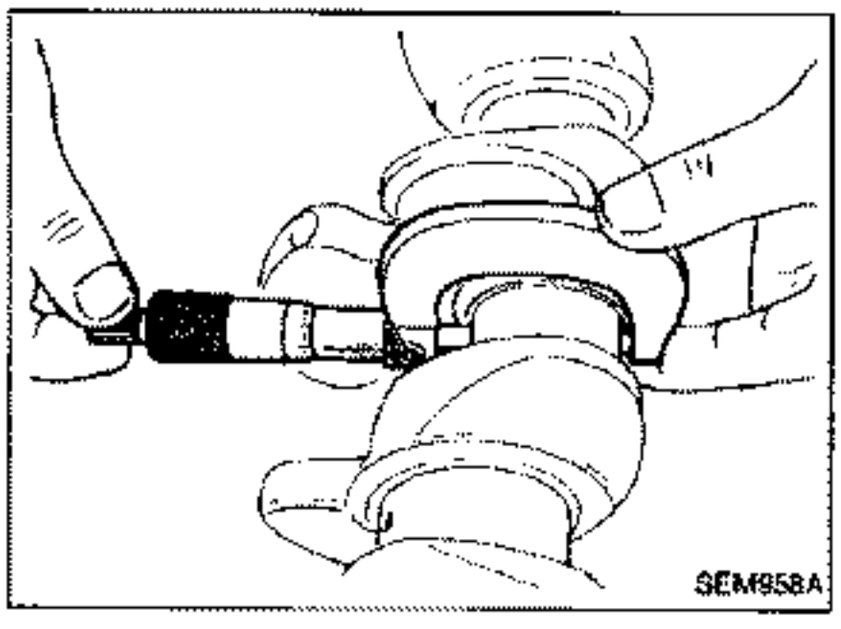

4. Measure outer diameter "Dp" of each crankshaft pin journal.
5. Calculate connecting rod bearing clearance.

   Connecting rod bearing clearance (C – Dp):

   Standard

   0.028 - 0.048 mm (0.0011 - 0.0019 in)

   Limit

   0.090 mm (0.0035 in)
6. If it exceeds the limit, replace bearing.
7. If clearance cannot be adjusted within the standard of any bearing, grind crankshaft journal and use undersized bearing.

   Refer to step 7 of "BEARING CLEARANCE — Main bearing".

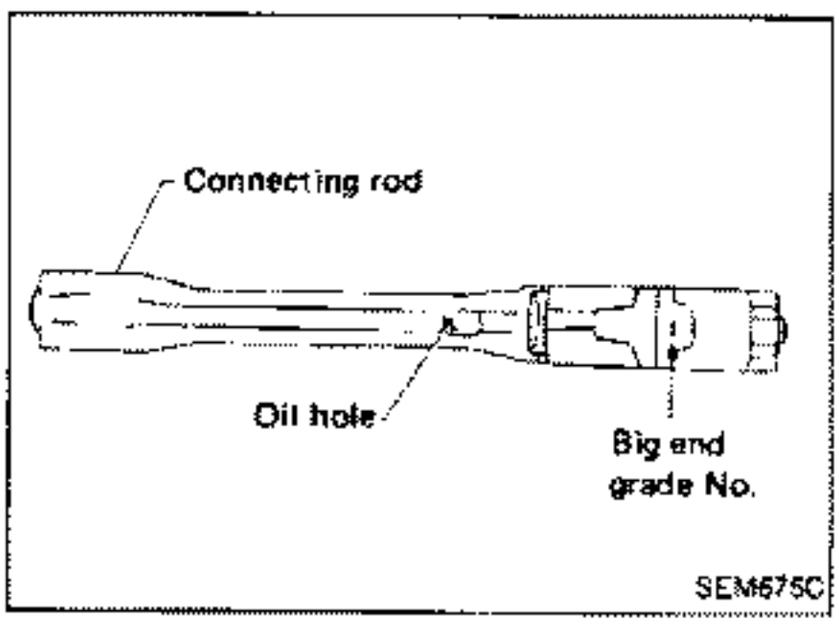

8. If crankshaft, connecting rods or bearings are replaced with new ones, it is necessary to select thickness of connecting rod bearings as follows:

a. Grade number of each connecting rod big end is punched on the respective connecting rod.

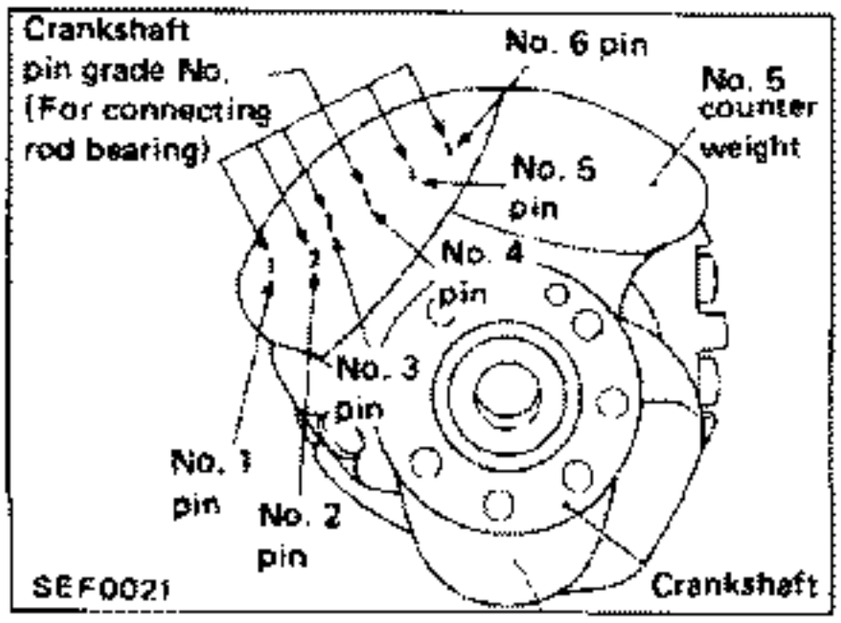

b. Grade number of each crankshaft pin journal is punched on the No. 5 counter weight of crankshaft.

Inspection (Cont'd)

c. Select connecting rod bearing with suitable thickness according to the following table.

Connecting rod bearing grade number:

Crankshaft pin grade number \ Connecting rod big end grade number	0	1 (I)
0	0	1
1 (I)	1	2
2 (II)	2	3

For example:
Connecting rod big end grade number: 1
Crankshaft pin grade number: 2
Connecting rod bearing grade number = 1 + 2
= 3

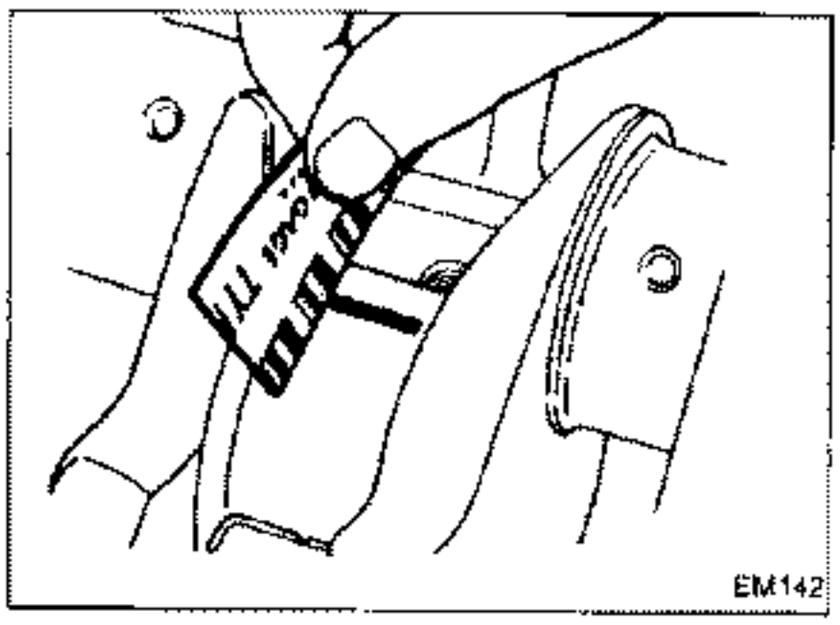
EM142

Method B (Using "plastigage")

CAUTION:

- **Do not turn crankshaft or connecting rod while plastigage is being inserted.**
- **When bearing clearance exceeds the specified limit, ensure that the proper bearing has been installed. Then if excessive bearing clearance exists, use a thicker main bearing or undersized bearing so that the specified bearing clearance is obtained.**

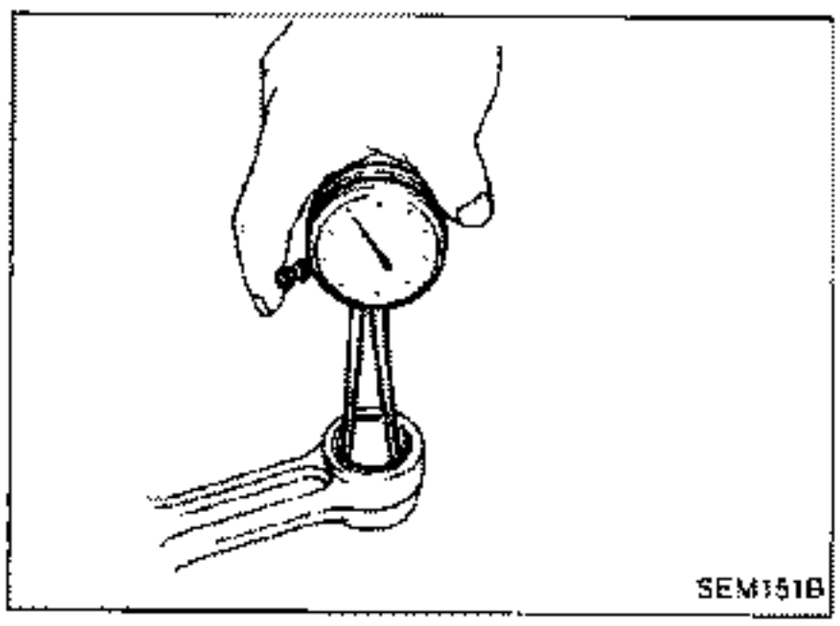
SEM151B

CONNECTING ROD BUSHING CLEARANCE (Small end)

1. Measure inner diameter "C" of bushing.

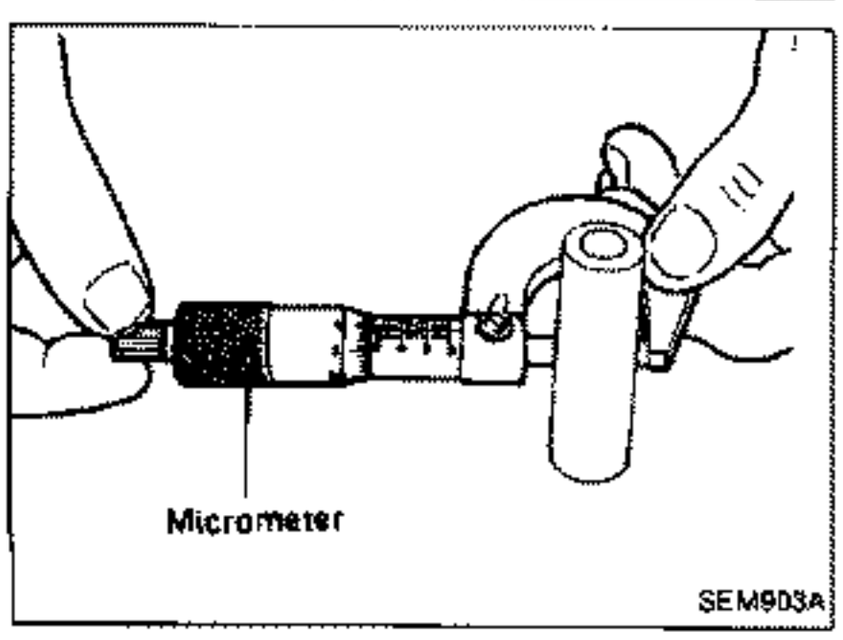

SEM903A

2. Measure outer diameter "Dp" of piston pin.
3. Calculate connecting rod bushing clearance.
   C – Dp = 0.005 - 0.017 mm (0.0002 - 0.0007 in)
   Limit: 0.023 mm (0.0009 in)

If it exceeds the specified value, replace connecting rod bushing and/or piston set with pin.

Inspection (Cont'd)

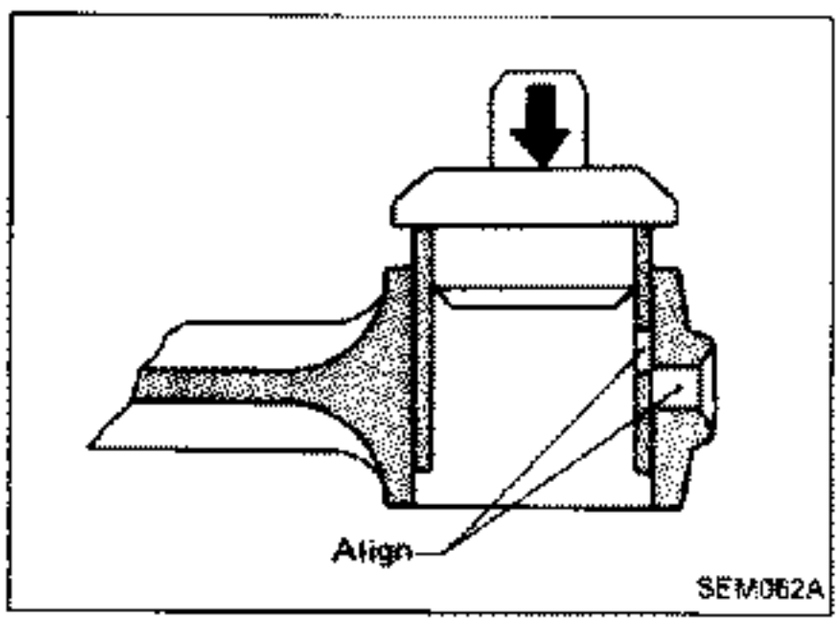

REPLACEMENT OF CONNECTING ROD BUSHING (Small end)

1. Drive in small end bushing until it is flush with end surface of rod.

Be sure to align the oil holes.

2. After driving in small end bushing, ream the bushing.

Small end bushing inside diameter:
Finished size
22.000 - 22.012 mm (0.8661 - 0.8666 in)

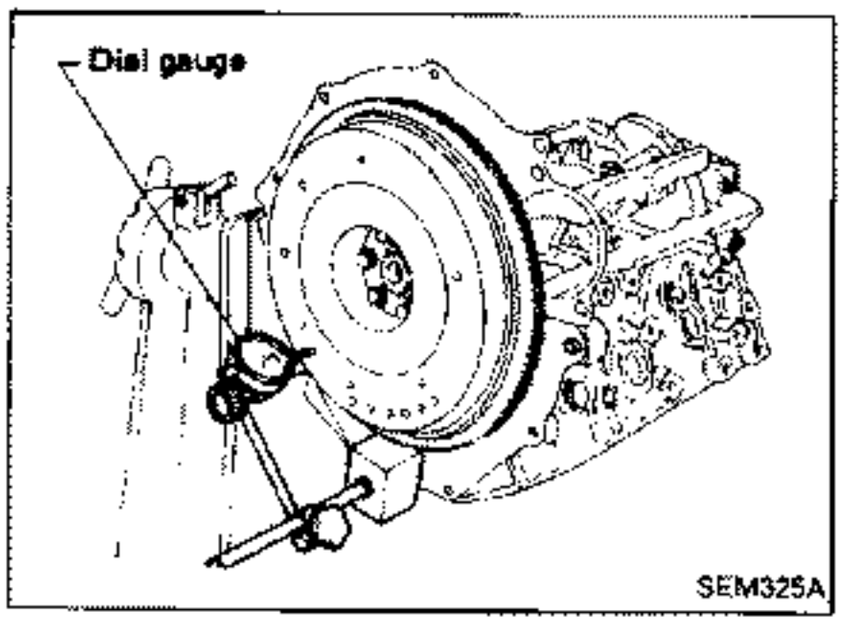

FLYWHEEL/DRIVE PLATE RUNOUT

Runout (Total indicator reading):
Flywheel (M/T model)
Less than 0.15 mm (0.0059 in)
Drive plate (A/T model)
Less than 0.15 mm (0.0059 in)

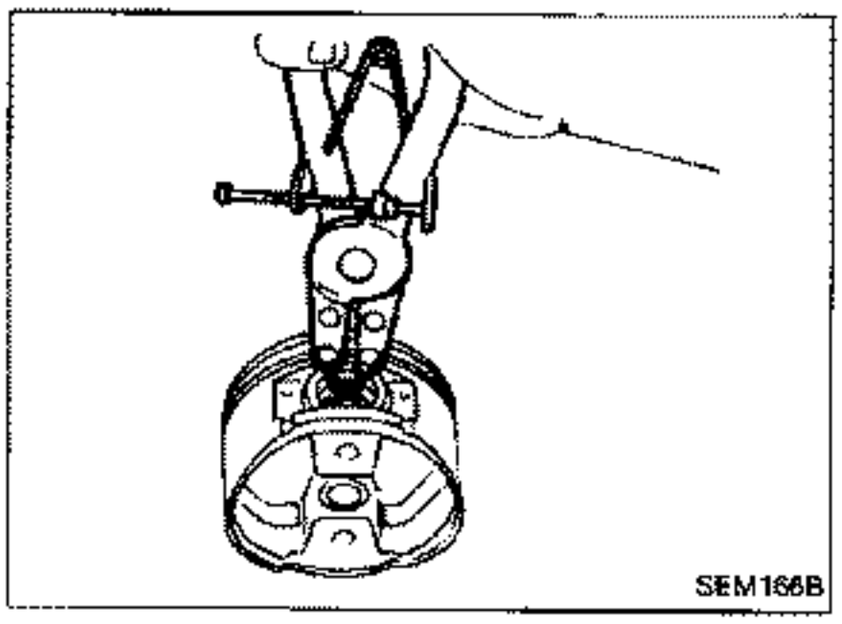

Assembly

PISTON

1. Install new snap ring on one side of piston pin hole.

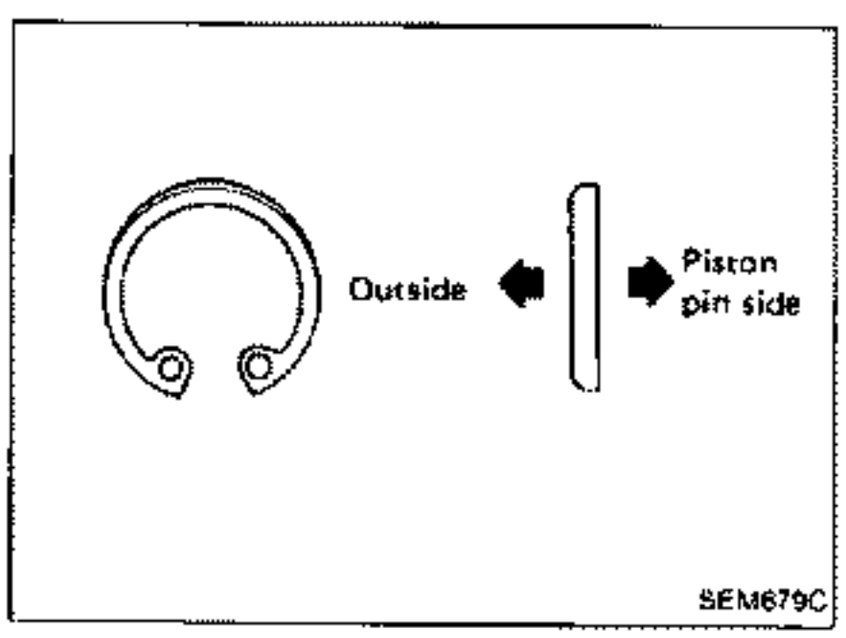

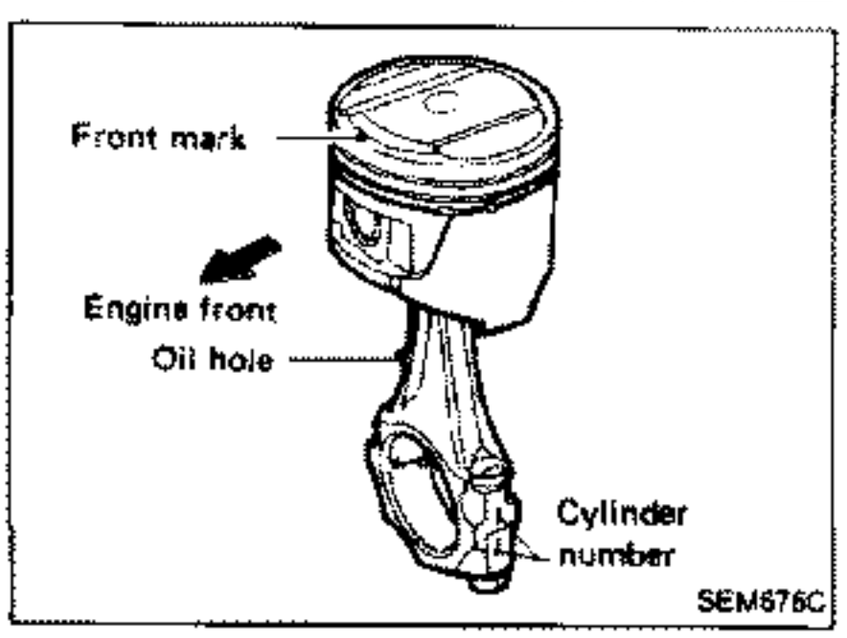

2. Heat piston to 60 to 70°C (140 to 158°F) and assemble piston, piston pin, connecting rod and new snap ring.

- **Align the direction of piston and connecting rod.**
- **Numbers stamped on connecting rod and cap correspond to each cylinder.**
- **After assembly, make sure connecting rod swings smoothly.**

Assembly (Cont'd)

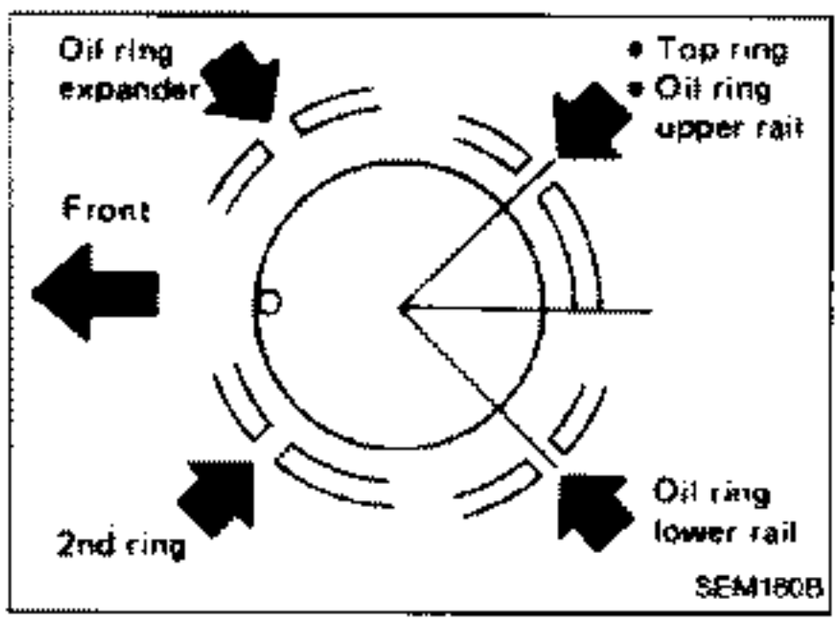

3. Set piston rings as shown.

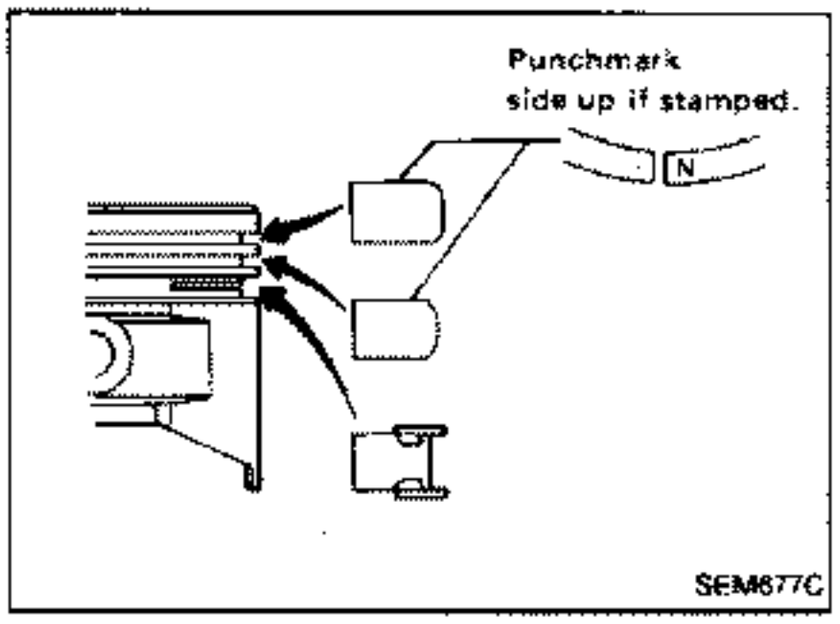

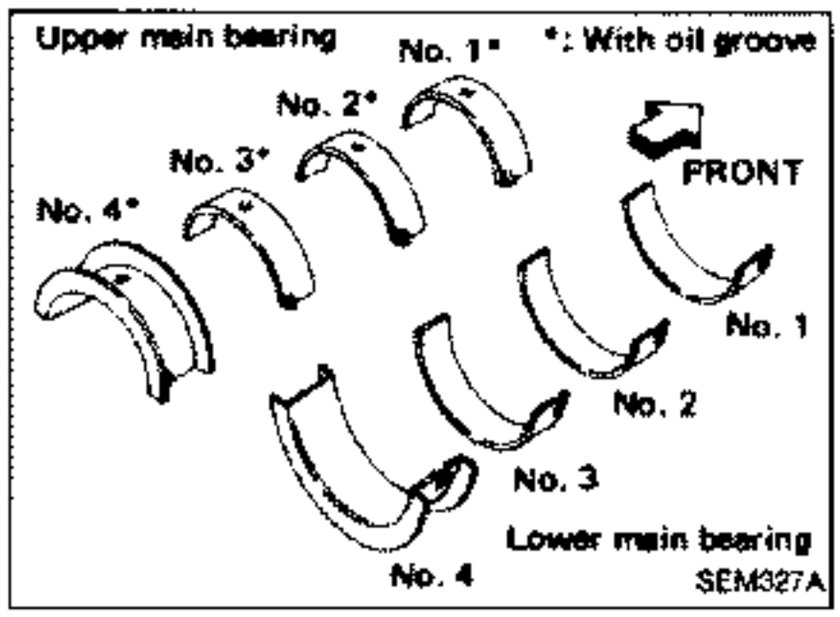

CRANKSHAFT

1. Set main bearings in their proper positions on cylinder block and main bearing cap.

- **Confirm that correct main bearings are used. Refer to "Inspection".**

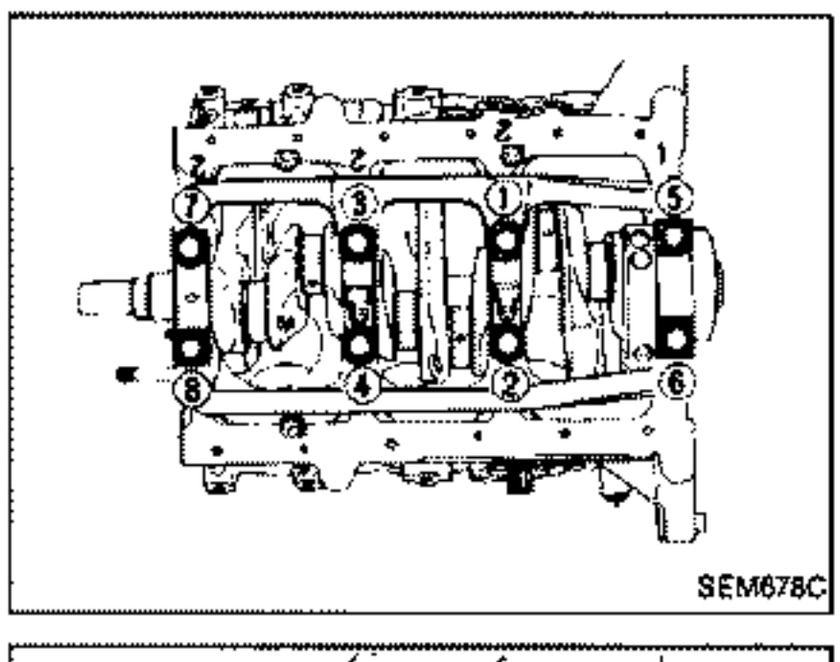

2. Install crankshaft and main bearing caps and tighten bolts to the specified torque.

- **Prior to tightening bearing cap bolts, place bearing cap in its proper position by shifting crankshaft in the axial direction.**
- **Tighten bearing cap bolts gradually in two or three stages. Start with center bearing and move outward sequentially.**
- **After securing bearing cap bolts, make sure crankshaft turns smoothly by hand.**

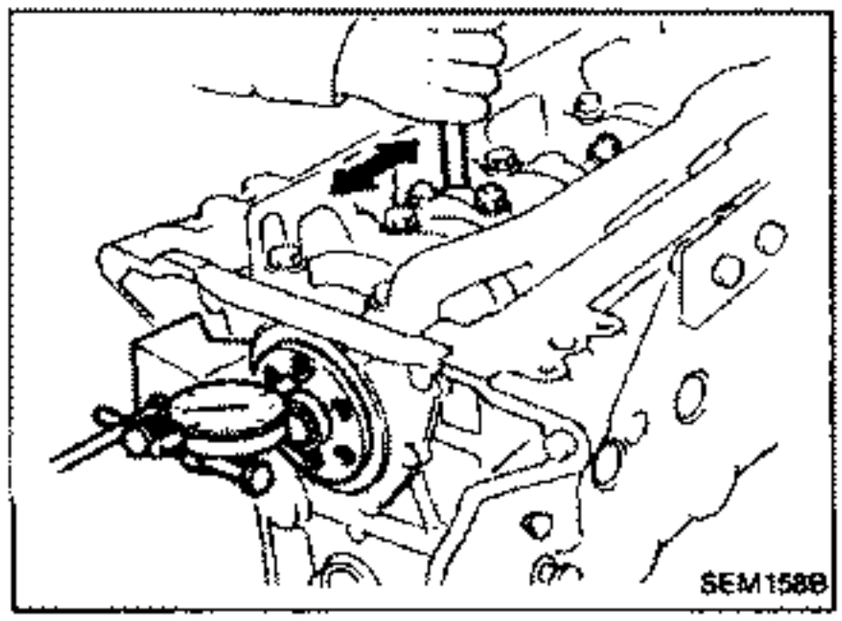

3. Measure crankshaft end play.

Crankshaft end play:

Standard

0.05 - 0.18 mm (0.0020 - 0.0071 in)

Limit

0.30 mm (0.0118 in)

If beyond the limit, replace bearing with a new one.

Assembly (Cont'd)

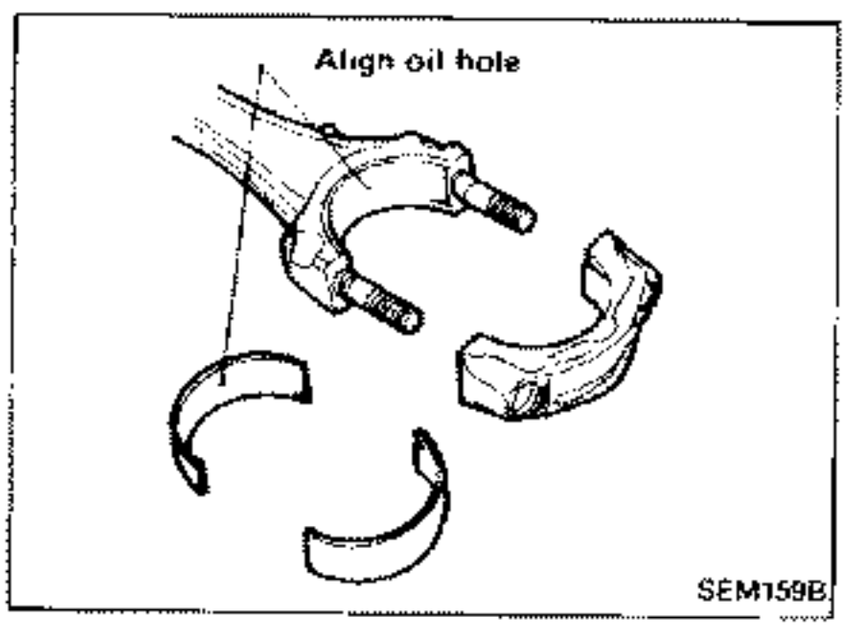

4. Install connecting rod bearings in connecting rods and connecting rod caps.

- **Confirm that correct bearings are used.**

Refer to "Inspection".

- Install bearings so that oil hole in connecting rod aligns with oil hole of bearing.

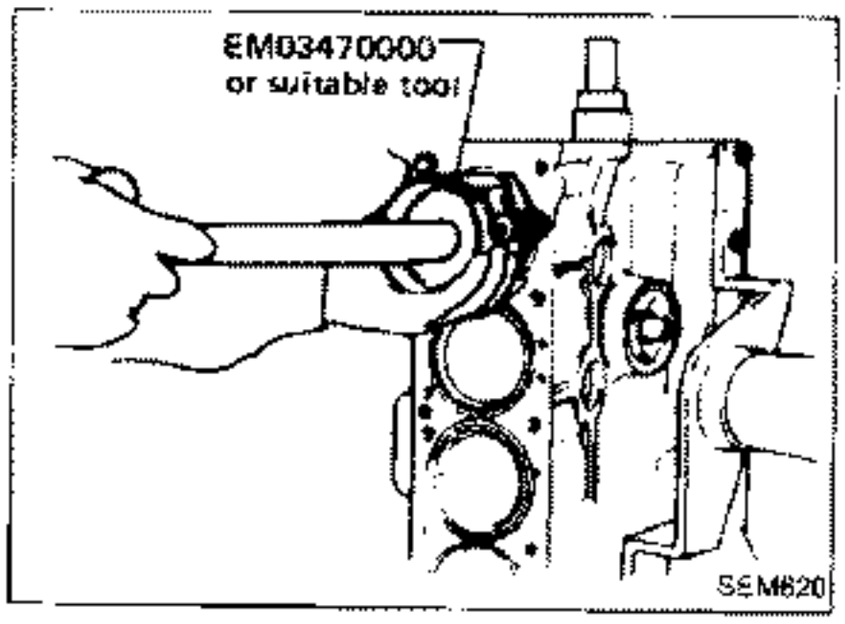

5. Install pistons with connecting rods.
a. Install them into corresponding cylinders with Tool.

- **Be careful not to scratch cylinder wall by connecting rod.**
- **Arrange so that front mark on piston head faces toward front of engine.**

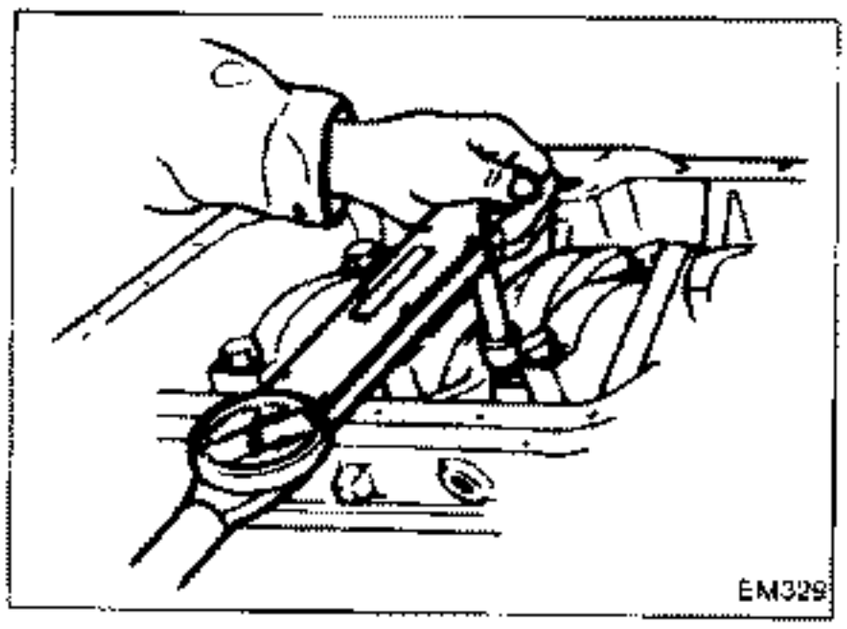

b. Install connecting rod bearing caps.
Tighten connecting rod bearingcap nuts to the specified torque.

: Connecting rod bearing nut

(1) Tighten to 14 to 16 N·m (1.4 to 1.6 kg-m, 10 to 12ft-lb).

(2) Turn nuts 60 to 65 degrees clockwise or, if an angle wrench is not available, tighten nuts to 38 to 44 N·m (3.9 to 4.5 kg-m, 28 to 33 ft-lb).

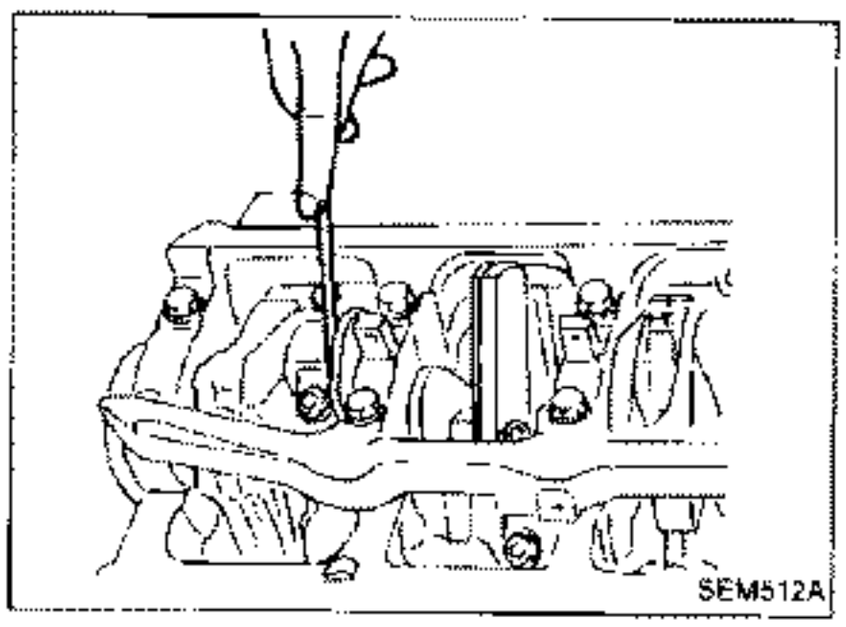

6. Measure connecting rod side clearance.

Connecting rod side clearance:

Standard

0.20 - 0.35 mm (0.0079 - 0.0138 in)

Limit

0.40 mm (0.0157 in)

If beyond the limit, replace connecting rod and/or crankshaft.

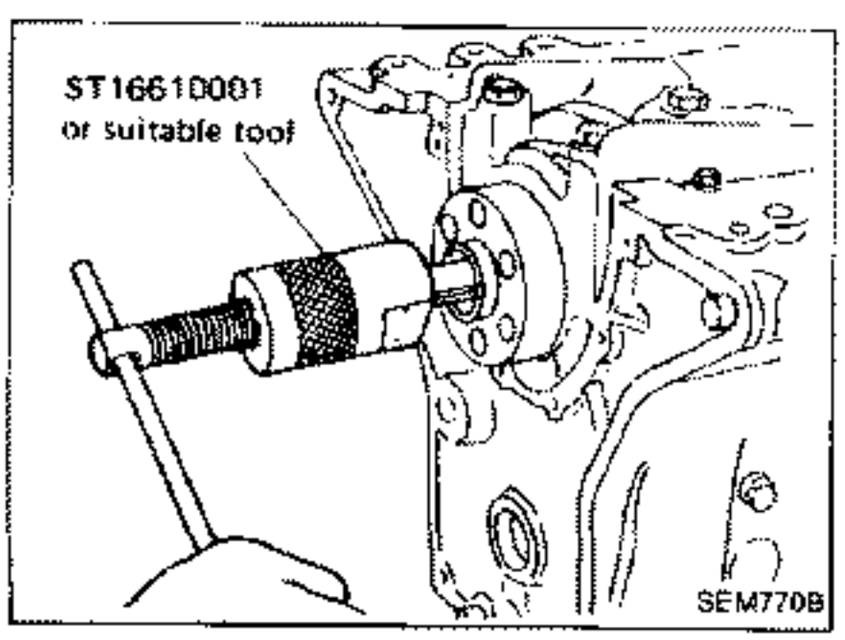

REPLACING PILOT BUSHING

1. Remove pilot bushing (M/T)/pilot converter (A/T).

Assembly (Cont'd)

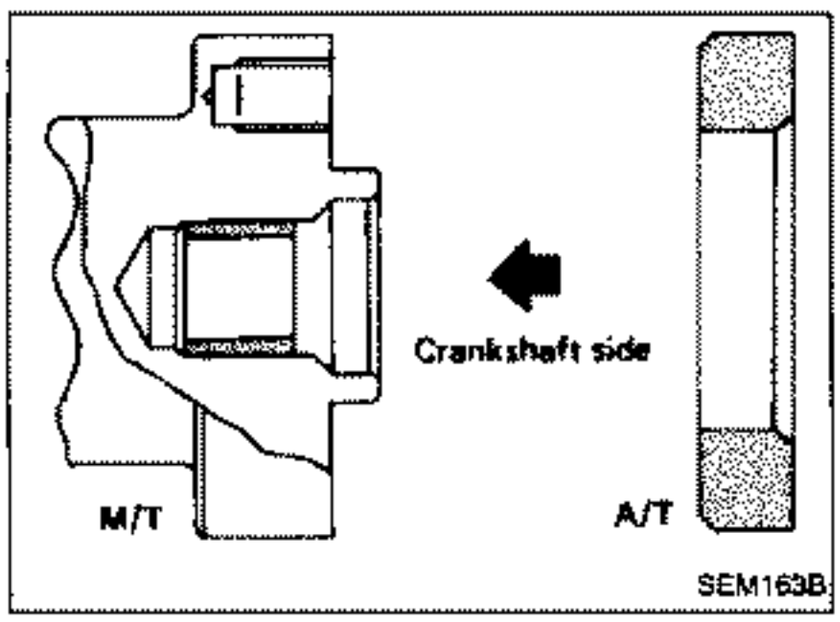

2. Install pilot bushing (M/T)/pilot converter (A/T).

General Specifications

Cylinder arrangement		V-6
Displacement	cm^3 (cu in)	2,960 (180.62)
Bore and stroke	mm (in)	87 × 83 (3.43 × 3.27)
Valve arrangement		D.O.H.C.
Firing order		1-2-3-4-5-6
Number of piston rings		
Compression		2
Oil		1
Number of main bearings		4
Compression ratio (Non-turbo/Turbo)		10.5/8.5

Cylinder number

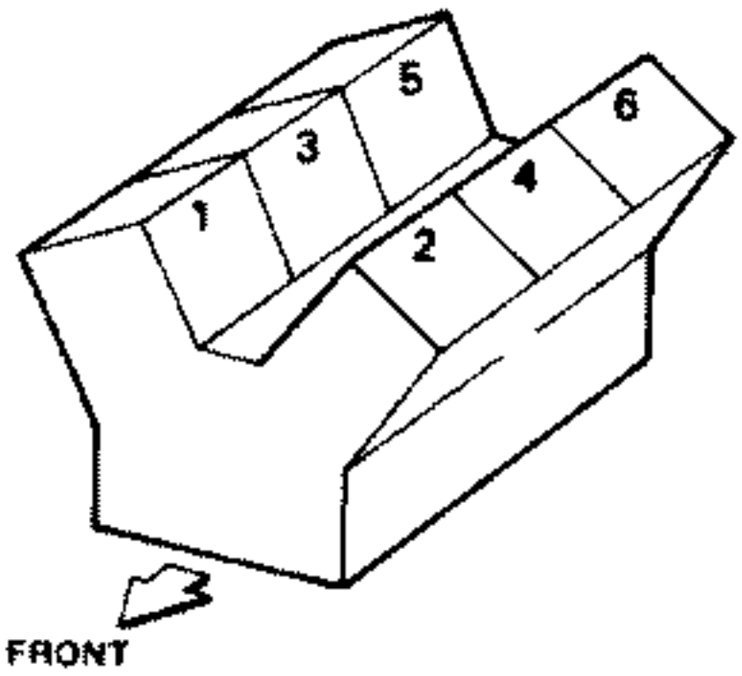

SEM713A

COMPRESSION PRESSURE

Unit: kPa (bar, kg/cm^2, psi)/300 rpm

Compression pressure	
Standard	1,285 (12.85, 13.1, 186)
Minimum	981 (9.81, 10.0, 142)
Differential limit between cylinders	98 (0.98, 1.0, 14)

Inspection and Adjustment

CYLINDER HEAD

Unit: mm (in)

	Standard	Limit
Head surface distortion	Less than 0.05 (0.0020)	0.1 (0.004)

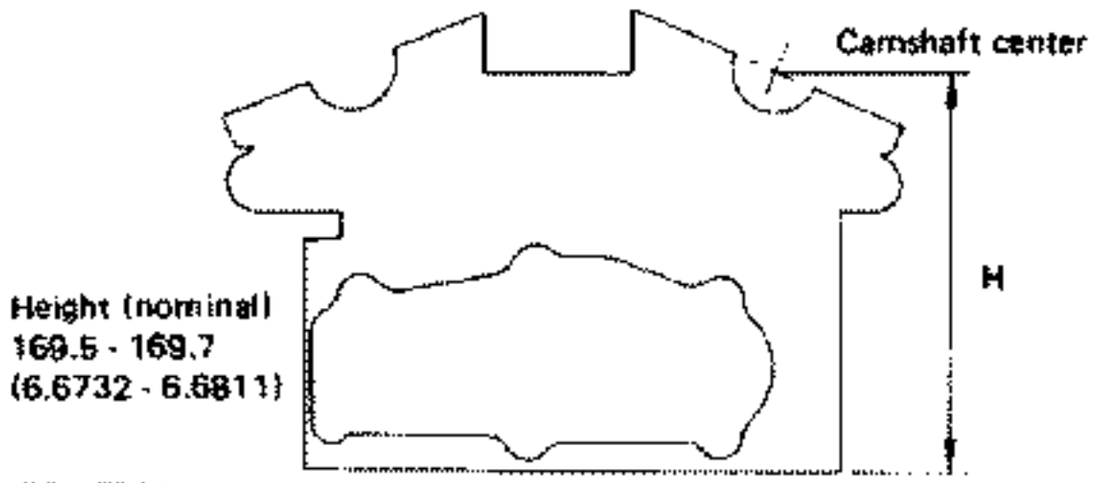

SEM570B

VALVE

Unit: mm (in)

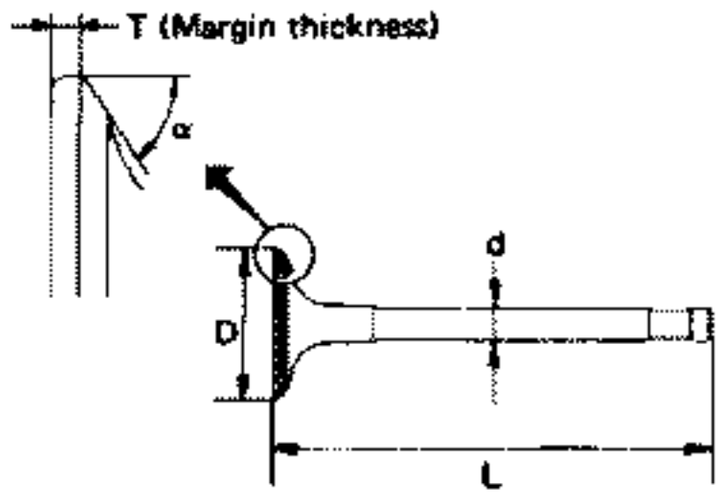

SEM188

Valve head diameter "D"	
Intake	34.0 - 34.2 (1.339 - 1.346)
Exhaust	29.5 - 29.7 (1.161 - 1.169)
Valve length "L"	
Intake	103.1 -103.3 (4.059 - 4.067)
Exhaust	103.6 - 103.8 (4.079 - 4.087)
Valve stem diameter "d"	
Intake	5.965 - 5.980 (0.2348 - 0.2354)
Exhaust	5.945 - 5.960 (0.2341 - 0.2346)
Valve seat angle "α"	
Intake	45°15' - 45°45'
Exhaust	
Valve margin "T"	
Intake	1.15 - 1.45 (0.0453 - 0.0571)
Exhaust	1.35 - 1.65 (0.0531 - 0.0650)
Valve margin "T" limit	More than 0.5 (0.020)
Valve stem end surface grinding limit	Less than 0.2 (0.008)
Valve clearance	
Intake	0 (0)
Exhaust	0 (0)

Valve spring

Free height	mm (in)		43.1 (1.697)
Pressure N (kg, lb) at height mm (in)		Standard	536.4 (54.7, 120.6) at 26.5 (1.043)
		Limit	452.79 (46.17, 101.80) at 26.5 (1.043)
Out-of square	mm (in)		Less than 1.8 (0.071)

Inspection and Adjustment (Cont'd)

Hydraulic valve lifter

Unit: mm (in)

Lifter outer diameter	30.955 - 30.965 (1.2187 - 1.2191)
Lifter guide inner diameter	31.000 - 31.020 (1.2205 - 1.2213)
Clearance between lifter and lifter guide	0.035 - 0.065 (0.0014 - 0.0026)

Valve guide

Unit: mm (in)

	Standard	Service
Valve guide Outer diameter	10.023 - 10.034 (0.3946 - 0.3950)	10.223 - 10.234 (0.4025 - 0.4029)
Valve guide Inner diameter (Finished size)	6.000 - 6.018 (0.2362 - 0.2369)	
Cylinder head valve guide hole diameter	9.975 - 9.996 (0.3927 - 0.3935)	10.175 - 10.196 (0.4006 - 0.4014)
Interference fit of valve guide	0.027 - 0.059 (0.0011 - 0.0023)	

	Standard	Max. tolerance
Stem to guide clearance Intake	0.020 - 0.053 (0.0008 - 0.0021)	0.10 (0.0039)
Exhaust	0.040 - 0.073 (0.0016 - 0.0029)	
Valve deflection limit	—	0.20 (0.0079)

Inspection and Adjustment (Cont'd)

VALVE SEAT

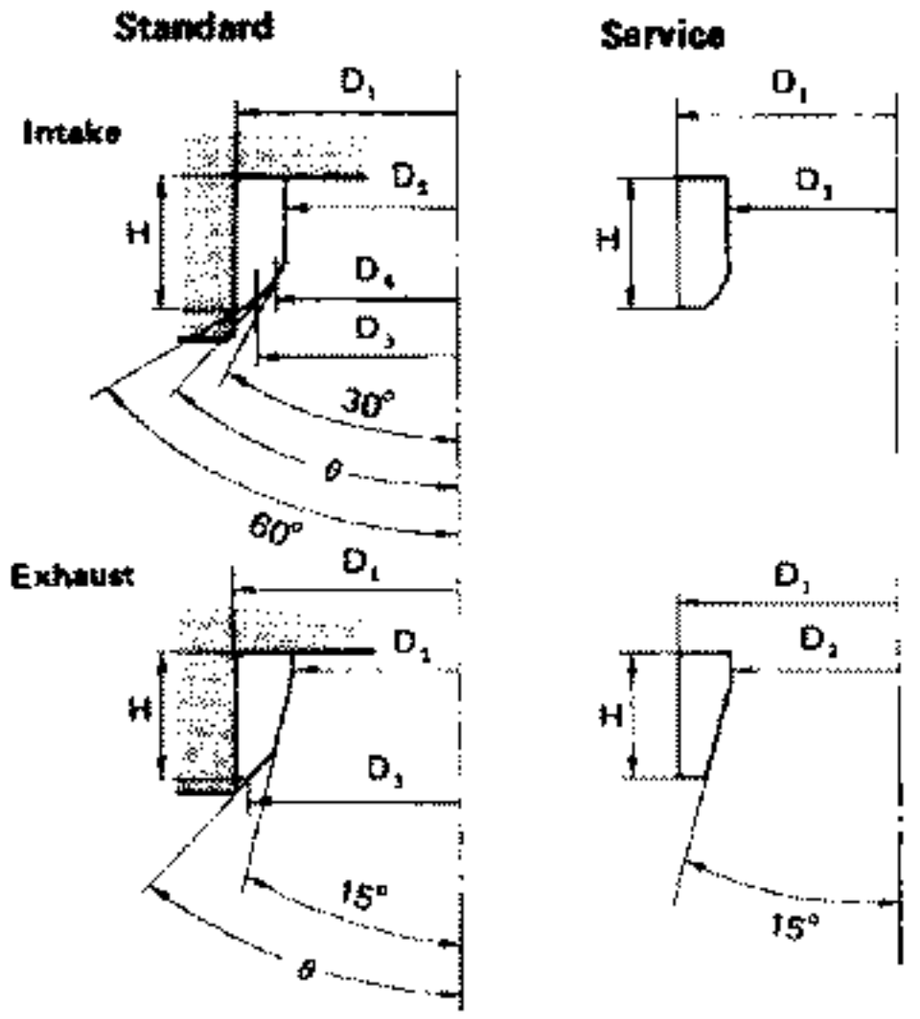

SEM529C

Unit: mm (in)

		Standard	Service*
Cylinder head seal recess diameter (D_1)	In.	36.000 - 36.016 (1.4173 - 1.4179)	36.500 - 36.516 (1.4370 - 1.4376)
	Ex.	31.500 - 31.516 (1.2402 - 1.2408)	32.000 - 32.016 (1.2598 - 1.2605)
Valve seat interference fit	In.	0.081 - 0.113 (0.0032 - 0.0044)	
	Ex.	0.064 - 0.096 (0.0025 - 0.0038)	
Valve seat outer diameter (D_3)	In.	36.097 - 36.113 (1.4211 - 1.4218)	36.597 - 36.613 (1.4408 - 1.4415)
	Ex.	31.580 - 31.596 (1.2433 - 1.2439)	32.080 - 32.096 (1.2630 - 1.2636)
Valve seat inner diameter (D_2)	In.	29.85 - 30.15 (1.1752 - 1.1870)	
	Ex.	24.35 - 24.65 (0.9587 - 0.9705)	
Height (H)	In.	5.9 - 6.0 (0.232 - 0.236)	5.35 - 5.45 (0.2106 - 0.2146)
	Ex.	5.9 - 6.0 (0.232 - 0.236)	5.9 - 6.0 (0.232 - 0.236)
Face angle (θ)	In.	45°	
	Ex.	45°	
Face inner diameter (D_4)	In.	31.5 (1.240)	*: Valve seat surface must be corrected to specified value.
Face outer diameter (D_3)	In.	33.6 - 33.8 (1.323 - 1.331)	
	Ex.	28.9 - 29.1 (1.138 - 1.146)	

Inspection and Adjustment (Cont'd)

PISTON, PISTON RING AND PISTON PIN

Available piston

Unit: mm (in)

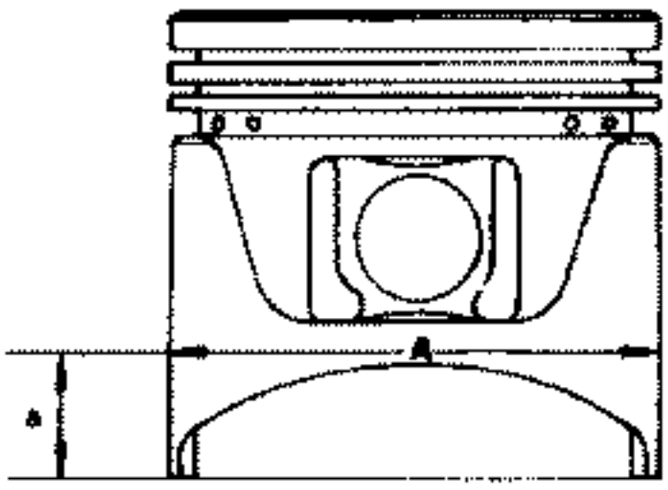

SEM891B

Piston skirt diameter "A"	
Standard	
Grade No. 1	86.975 - 86.985 (3.4242 - 3.4246)
Grade No. 2	86.985 - 86.995 (3.4246 - 3.4250)
Grade No. 3	86.995 - 87.005 (3.4250 - 3.4254)
0.25 (0.0098) oversize (Service)	87.225 - 87.275 (3.4340 - 3.4360)
0.50 (0.0197) oversize (Service)	87.475 - 87.525 (3.4439 - 3.4459)
"a" dimension	11.5 (0.453)
Piston pin hole diameter	21.987 - 21.999 (0.8656 - 0.8661)
Piston clearance to cylinder block	
Non-turbo	0.015 - 0.035 (0.0006 - 0.0014)
Turbo	0.025 - 0.045 (0.0010 - 0.0018)

Piston ring

Unit: mm (in)

	Standard	Limit
Side clearance		
Top	0.040 - 0.073 (0.0016 - 0.0029)	0.1 (0.004)
2nd	0.030 - 0.063 (0.0012 - 0.0025)	
End gap		
Top	0.21 - 0.40 (0.0083 - 0.0157)	1.0 (0.039)
2nd	0.50 - 0.76 (0.0197 - 0.0299)	
Oil (rail ring)	0.20 - 0.76 (0.0079 - 0.0299)	

Piston pin

Unit: mm (in)

Piston pin outer diameter	21.989 - 22.001 (0.8657 - 0.8662)
Interference fit of piston pin to piston	0 - 0.004 (0 - 0.0002)
Piston pin to connecting rod bushing clearance	0.005 - 0.017 (0.0002 - 0.0007)

*Values measured at ambient temperature of 20°C (68°F)

CONNECTING ROD

Unit: mm (in)

Center distance	154.1 - 154.2 (6.067 - 6.071)
Bend [per 100 (3.94)]	
Limit	0.15 (0.0059)
Torsion [per 100 (3.94)]	
Limit	0.3 (0.012)
Piston pin bushing inner diameter*	22.000 - 22.012 (0.8661 - 0.8666)
Connecting rod big end inner diameter	53.000 - 53.013 (2.0866 - 2.0871)
Side clearance	
Standard	0.20 - 0.35 (0.0079 - 0.0138)
Limit	0.40 (0.0157)

*After installing in connecting rod

Inspection and Adjustment (Cont'd)

CAMSHAFT AND CAMSHAFT BEARING

Unit: mm (in)

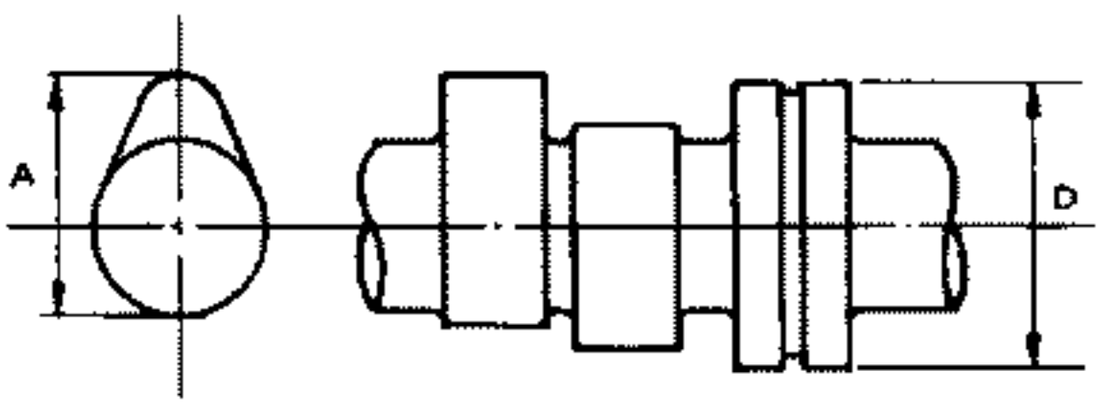

SEM569M

	Standard	Max. tolerance
Camshaft journal to bearing clearance	0.045 - 0.086 (0.0018 - 0.0034)	0.15 (0.0059)
Inner diameter of camshaft bearing	28.000 - 28.021 (1.1024 - 1.1032)	—
Outer diameter of camshaft journal	27.935 - 27.955 (1.0998 - 1.1006)	—
Camshaft runout [T.I.R.]*	Less than 0.04 (0.0016)	0.1 (0.004)
Camshaft end play	0.03 - 0.08 (0.0012 - 0.0031)	—

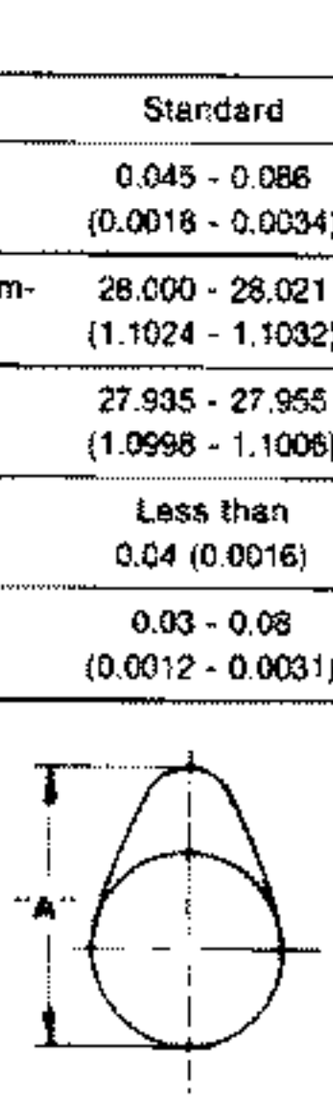

EM671

Cam height "A"	
Intake Exhaust	40.405 - 40.595 (1.5907 - 1.5982)
Wear limit of cam height	0.15 (0.0059)

*Total indicator reading

Valve timing

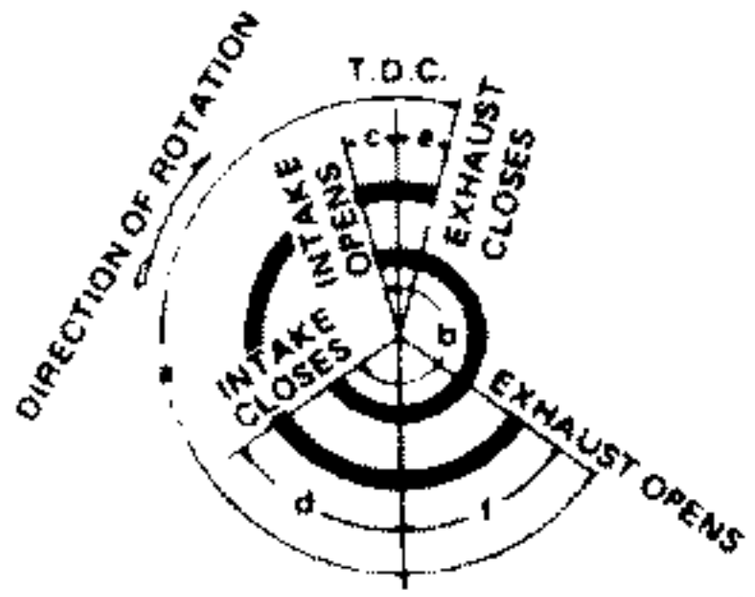

EM120

Unit: degree

Model	a	b	c	d	e	f
VG30DETT A/T	248	240	0	60	9	59
Others	248	248	−1	59	9	59

Inspection and Adjustment (Cont'd)

CYLINDER BLOCK

Unit: mm (in)

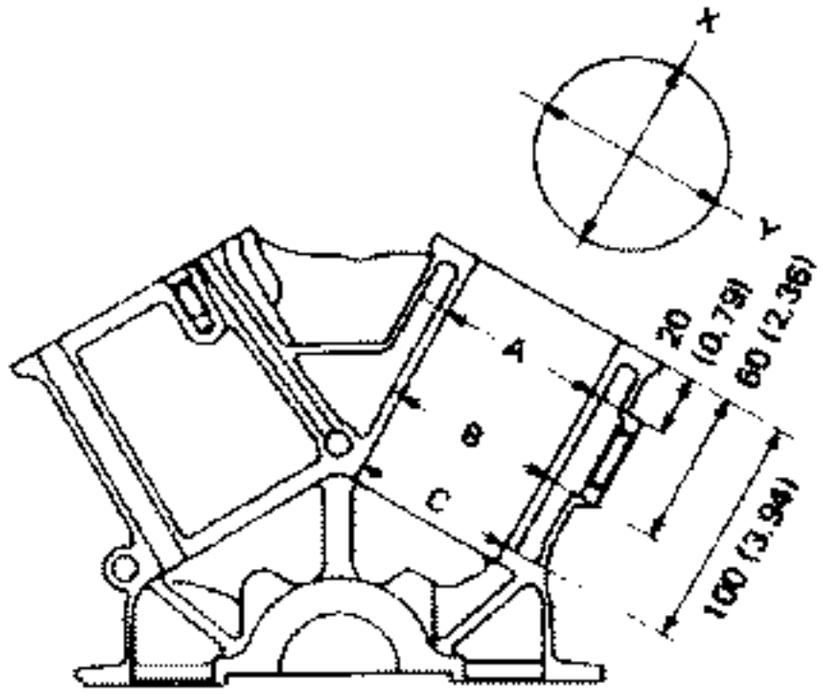

SEM321A

Surface flatness	
Standard	Less than 0.03 (0.0012)
Limit	0.10 (0.0039)
Cylinder bore	
Inner diameter	
Standard	
Grade No. 1	87.000 - 87.010 (3.4252 - 3.4256)
Grade No. 2	87.010 - 87.020 (3.4256 - 3.4260)
Grade No. 3	87.020 - 87.030 (3.4260 - 3.4264)
Wear limit	0.20 (0.0079)
Out-of-round (X – Y)	Less than 0.015 (0.0006)
Taper (A – B – C)	Less than 0.010 (0.0004)
Main journal inner diameter	
Grade No. 0	66.645 - 66.654 (2.6238 - 2.6242)
Grade No. 1	66.654 - 66.663 (2.6242 - 2.6245)
Grade No. 2	66.663 - 66.672 (2.6245 - 2.6249)
Difference in inner diameter between cylinders	
Standard	Less than 0.05 (0.0020)

CRANKSHAFT

Unit: mm (in)

Main journal dia. "Dm"	
Grade No. 0	62.967 - 62.975 (2.4790 - 2.4793)
Grade No. 1	62.959 - 62.967 (2.4787 - 2.4790)
Grade No. 2	62.951 - 62.959 (2.4784 - 2.4787)
Pin journal dia. "Dp"	
Grade No. 0	49.968 - 49.974 (1.9672 - 1.9675)
Grade No. 1	49.962 - 49.968 (1.9670 - 1.9672)
Grade No. 2	49.955 - 49.962 (1.9667 - 1.9670)
Center distance "r"	41.47 - 41.53 (1.6327 - 1.6350)
Out-of-round (X – Y)	
Standard	Less than 0.005 (0.0002)
Taper (A – B)	
Standard	Less than 0.005 (0.0002)
Runout [T.I.R.]	
Standard	Less than 0.10 (0.0039)
Free end play	
Standard	0.05 - 0.18 (0.0020 - 0.0071)
Limit	0.30 (0.0118)

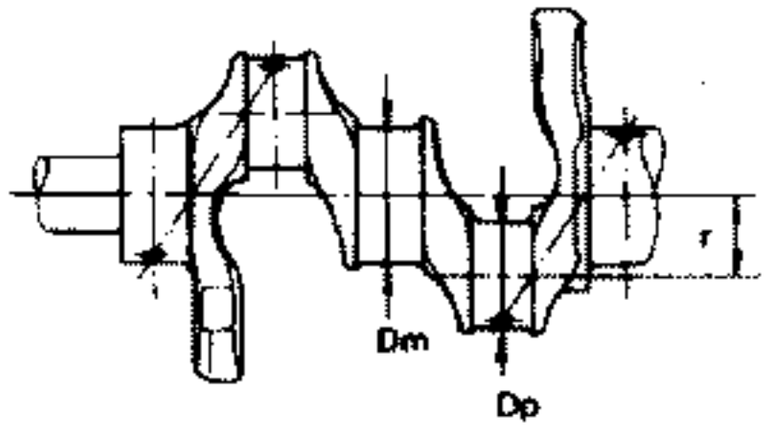

SEM645

Out-of-round X – Y
Taper A – B

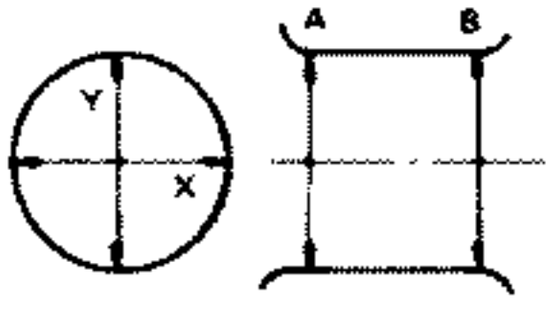

EM715

Inspection and Adjustment (Cont'd)

AVAILABLE MAIN BEARING

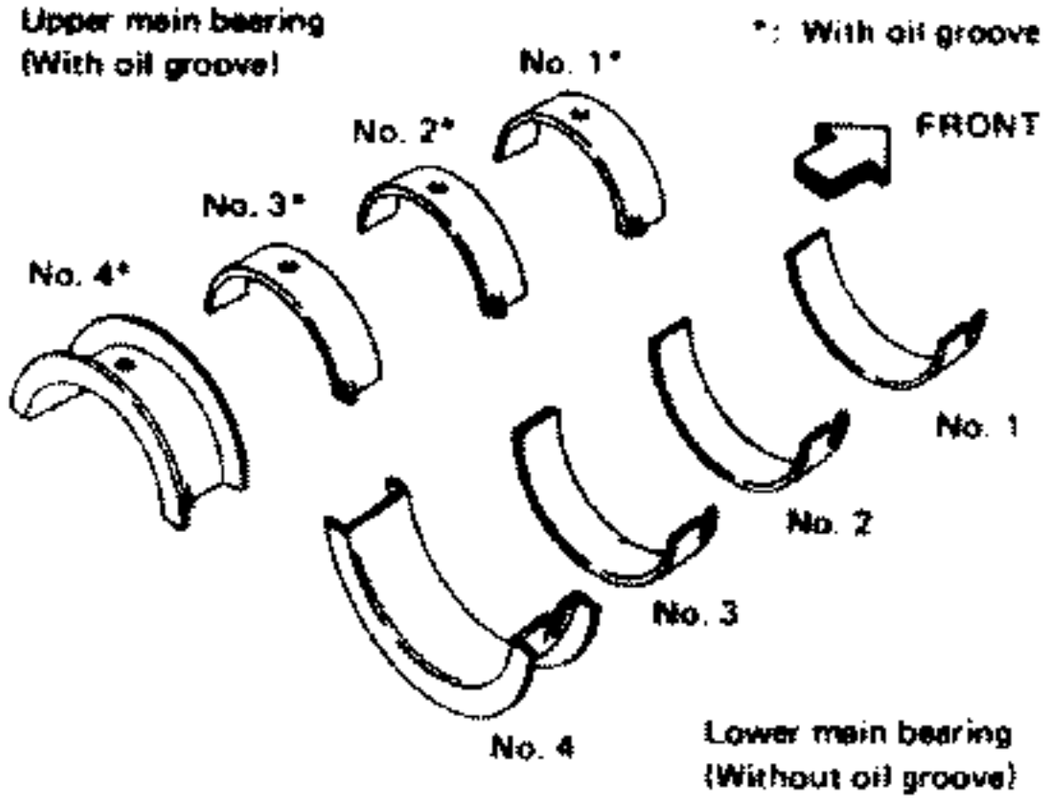

SEM327A

No. 1 main bearing

Grade number	Thickness "T" mm (in)	Width "W" mm (in)	Identification color
0	1.817 - 1.821 (0.0715 - 0.0717)		Black
1	1.821 - 1.825 (0.0717 - 0.0719)		Brown
2	1.825 - 1.829 (0.0719 - 0.0720)	22.4 - 22.6 (0.882 - 0.890)	Green
3	1.829 - 1.833 (0.0720 - 0.0722)		Yellow
4	1.833 - 1.837 (0.0722 - 0.0723)		Blue

No. 2 and 3 main bearing

Grade number	Thickness "T" mm (in)	Width "W" mm (in)	Identification color
0	1.817 - 1.821 (0.0715 - 0.0717)		Black
1	1.821 - 1.825 (0.0717 - 0.0719)		Brown
2	1.825 - 1.829 (0.0719 - 0.0720)	18.9 - 19.1 (0.744 - 0.752)	Green
3	1.829 - 1.833 (0.0720 - 0.0722)		Yellow
4	1.833 - 1.837 (0.0722 - 0.0723)		Blue

No. 4 main bearing

Grade number	Thickness "T" mm (in)	Identification color
0	1.817 - 1.821 (0.0715 - 0.0717)	Black
1	1.821 - 1.825 (0.0717 - 0.0719)	Brown
2	1.825 - 1.829 (0.0719 - 0.0720)	Green
3	1.829 - 1.833 (0.0720 - 0.0722)	Yellow
4	1.833 - 1.837 (0.0722 - 0.0723)	Blue

Undersize

Unit: mm (in)

	Thickness	Main journal diameter "Dm"
0.25 (0.0098)	1.948 - 1.956 (0.0767 - 0.0770)	Grind so that bearing clearance is the specified value.

AVAILABLE CONNECTING ROD BEARING

Connecting rod bearing

Grade number	Thickness "T" mm (in)	Identification color
0	1.496 - 1.499 (0.0589 - 0.0590)	No paint
1	1.499 - 1.502 (0.0590 - 0.0591)	Brown
2	1.502 - 1.505 (0.0591 - 0.0593)	Green
3	1.505 - 1.508 (0.0593 - 0.0594)	Yellow

Undersize

Unit: mm (in)

	Thickness	Crank pin journal diameter "Dp"
0.08 (0.0031)	1.540 - 1.548 (0.0606 - 0.0609)	Grind so that bearing clearance is the specified value.
0.12 (0.0047)	1.560 - 1.568 (0.0614 - 0.0617)	
0.25 (0.0098)	1.625 - 1.633 (0.0640 - 0.0643)	

Inspection and Adjustment (Cont'd)

TURBOCHARGER

Unit: mm (in)

Rotor shaft	
Runout [T.I.R.]*	0.056 - 0.127 (0.0022 - 0.0050)
End play	0.013 - 0.096 (0.0005 - 0.0038)

*Total indicator reading

MISCELLANEOUS COMPONENTS

Unit: mm (in)

Flywheel	
Runout [T.I.R.]*	Less than 0.15 (0.0059)

*Total indicator reading

Bearing clearance

Unit: mm (in)

Main bearing clearance	
Standard	0.028 - 0.055 (0.0011 - 0.0022)
Limit	0.090 (0.0035)
Connecting rod bearing clearance	
Standard	0.028 - 0.048 (0.0011 - 0.0019)
Limit	0.090 (0.0035)

ENGINE LUBRICATION & COOLING SYSTEMS

SECTION LC

CONTENTS

PREPARATION ..... LC- 2
PRECAUTION ..... LC- 3
ENGINE LUBRICATION SYSTEM ..... LC- 4
ENGINE COOLING SYSTEM ..... LC- 8
SERVICE DATA AND SPECIFICATIONS (S.D.S.) LC-15

SPECIAL SERVICE TOOLS

Tool number Tool name	Description	
ST25051001 Oil pressure gauge		
ST25052000 Hose	Adapting oil pressure gauge to cylinder block	
WS39930000 Tube presser	Pressing the tube of liquid gasket	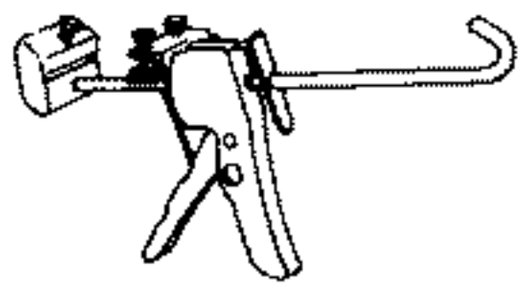
EG17650301 Radiator cap tester adapter	Adapting radiator cap tester to radiator filler neck	

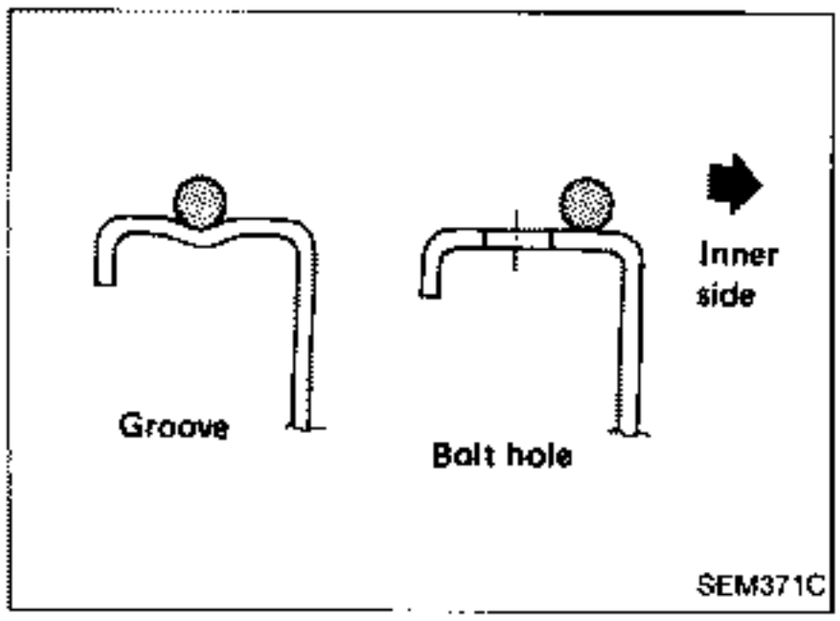

LIQUID GASKET APPLICATION PROCEDURE

a. Before applying liquid gasket, use a scraper to remove all traces of old liquid gasket from mating surface.
b. Apply a continuous bead of liquid gasket to mating surfaces. (Use Genuine Liquid Gasket or equivalent.)
   - Be sure liquid gasket is 3.5 to 4.5 mm (0.138 to 0.177 in) wide (for oil pan).
   - Be sure liquid gasket is 2.0 to 3.0 mm (0.079 to 0.118 in) wide (in areas except oil pan).
c. Apply liquid gasket to inner sealing surface around hole perimeter area.
   (Assembly should be done within 5 minutes after coating.)

Lubrication Circuit

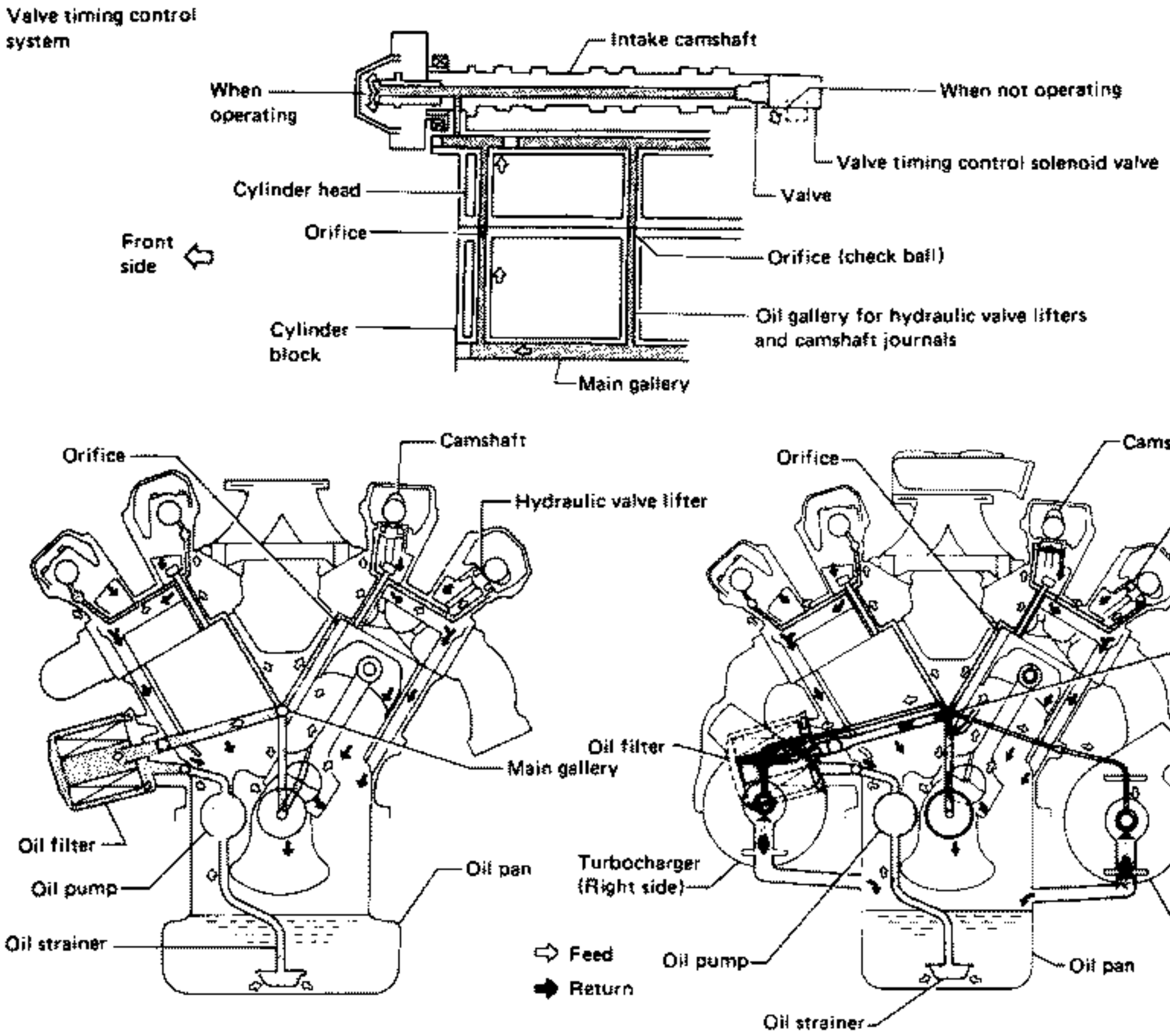

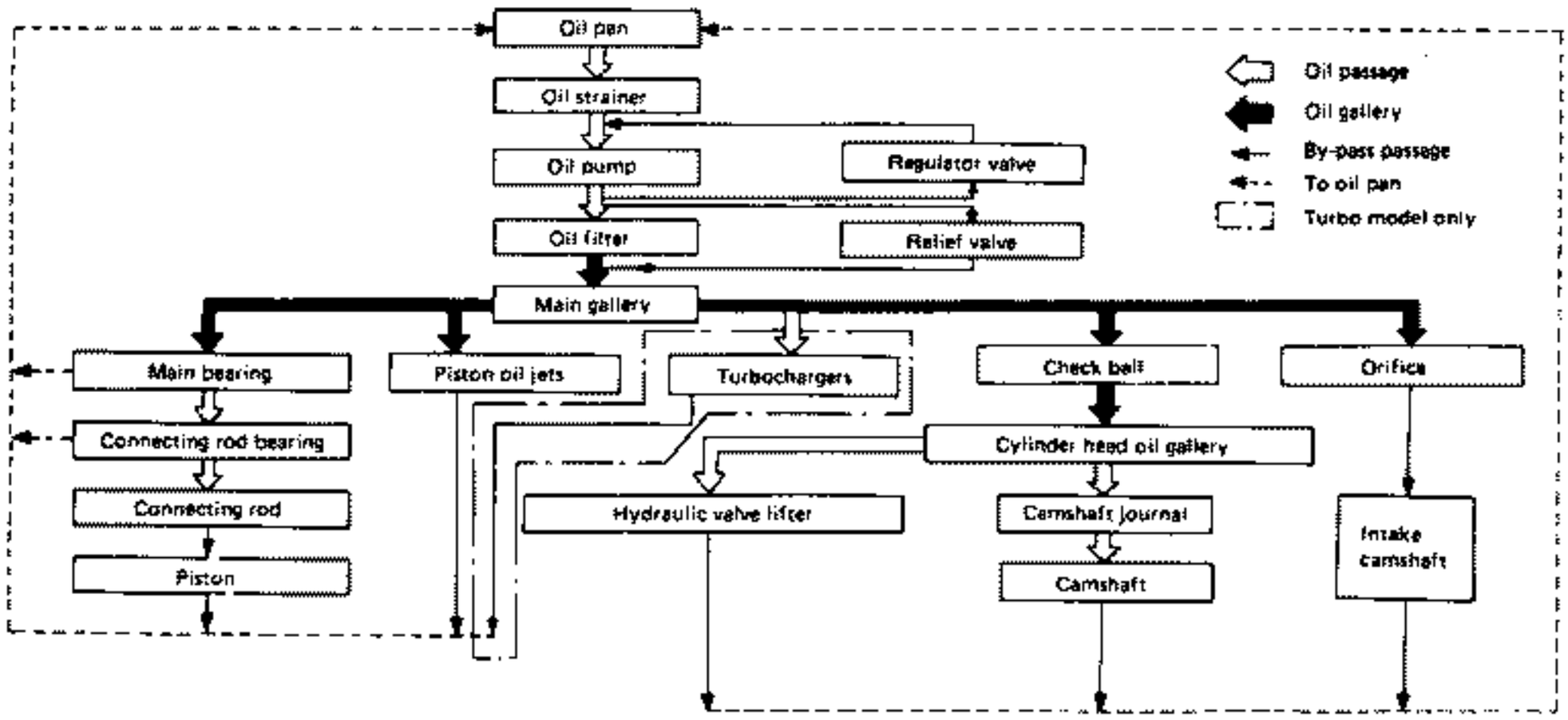

SLC342A

Oil Pressure Check

WARNING:

- **Be careful not to burn yourself, as the engine and oil may be hot.**
- **Oil pressure check should be done in "Neutral" gear position.**

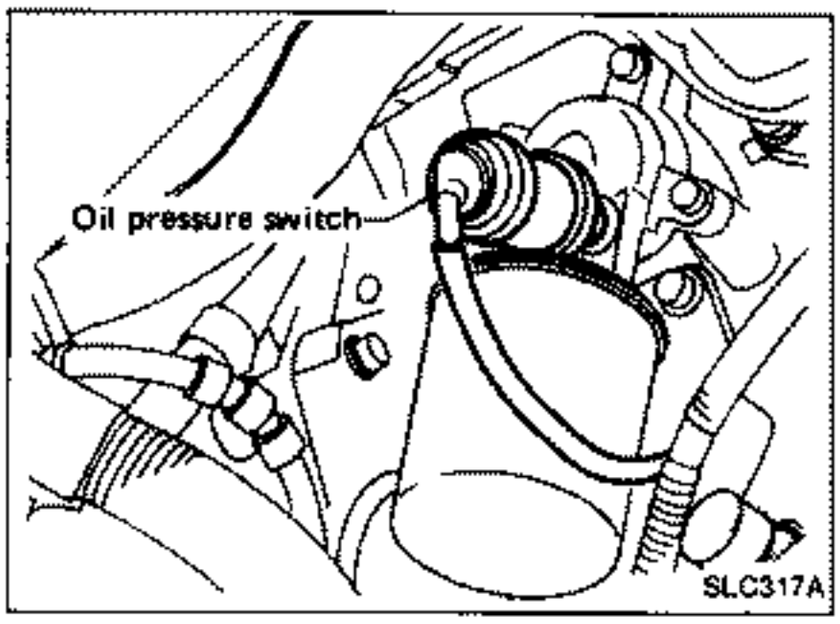

1. Check oil level.
2. Remove oil pressure switch.

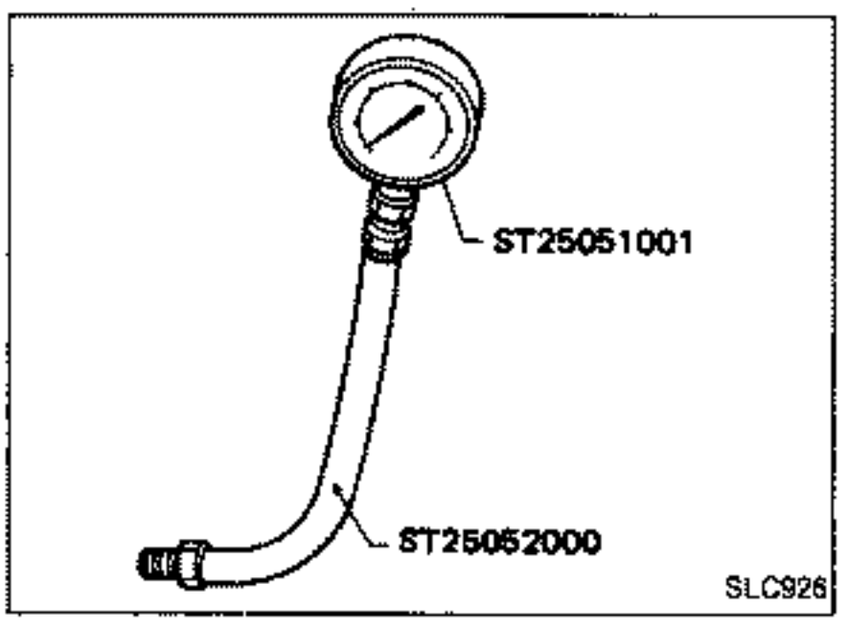

3. Install pressure gauge.
4. Start engine and warm it up to normal operating temperature.
5. Check oil pressure with engine running under no-load.

Engine rpm	Approximate discharge pressure kPa (bar, kg/cm^2, psi)
Idle speed	More than 78 (0.78, 0.8, 11)
3,000	353 - 451 (3.53 - 4.51, 3.6 - 4.6, 51 - 65)

If difference is extreme, check oil passage and oil pump for oil leaks.

6. Install oil pressure switch with sealant.

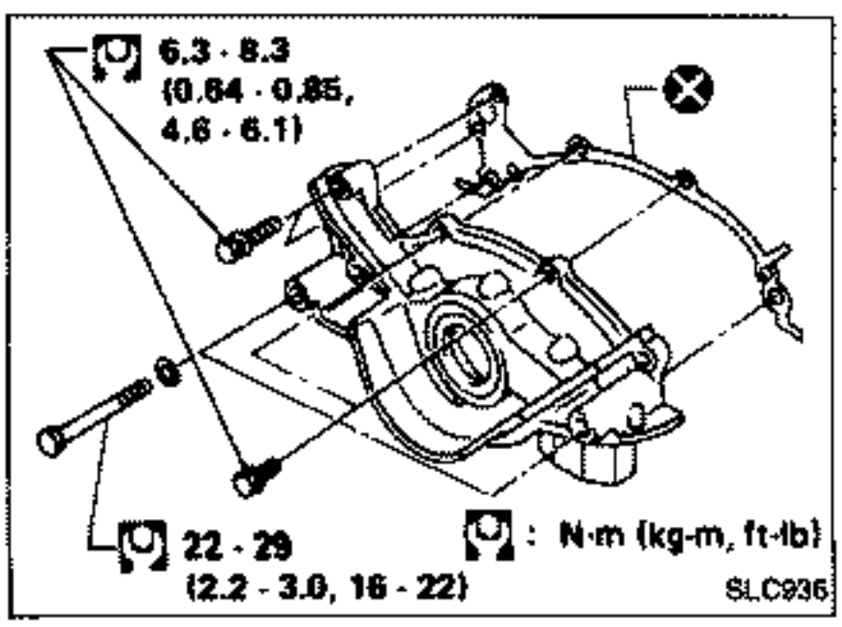

Oil Pump

REMOVAL

1. Drain oil.
2. Remove oil pan. (Refer to "OIL PAN — Removal" in EM section.)
3. Remove oil pump assembly.

Oil Pump (Cont'd)

DISASSEMBLY AND ASSEMBLY

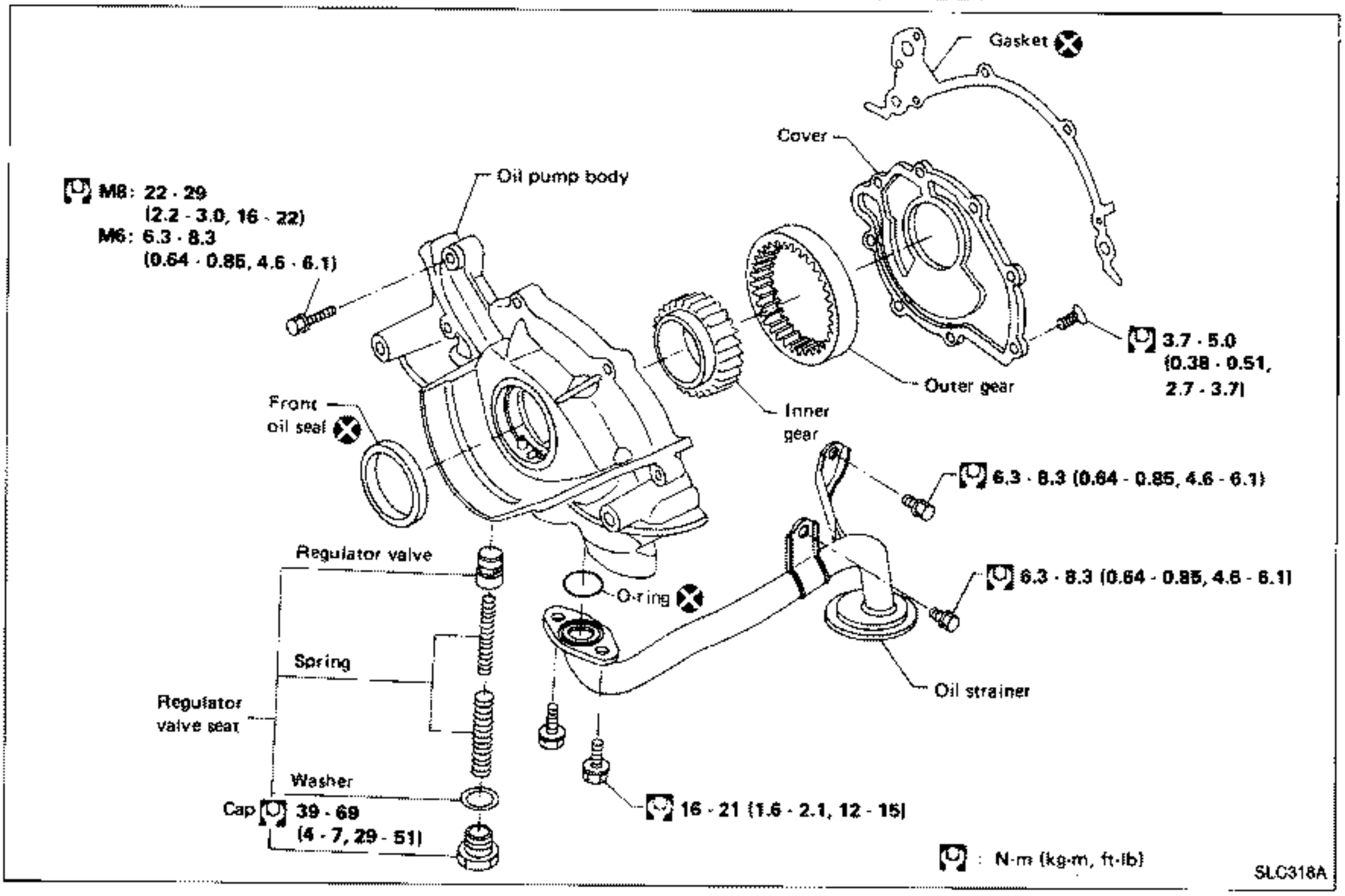

- **Always replace with new oil seal and gasket.**
- **When installing oil pump, apply engine oil to inner and outer gears.**
- **Be sure that O-ring is properly installed.**

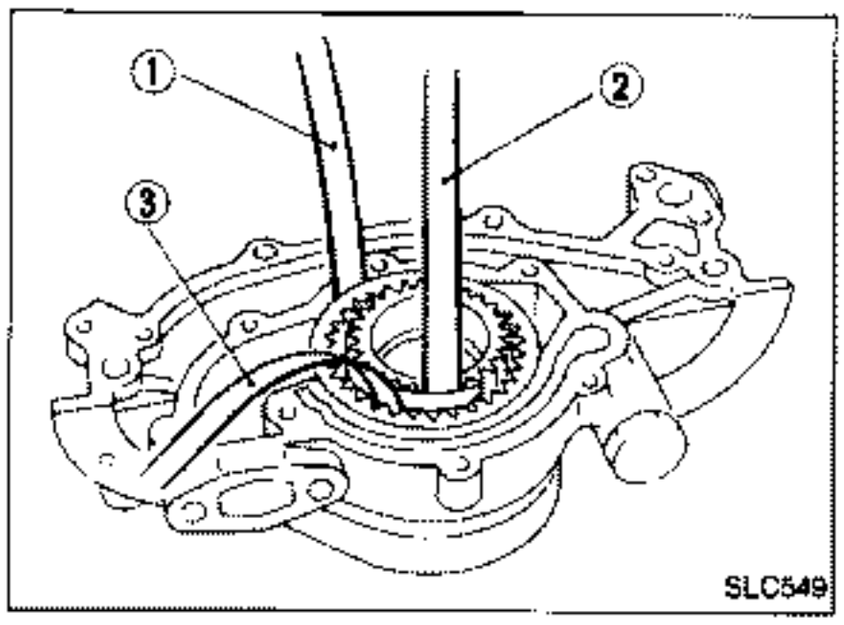

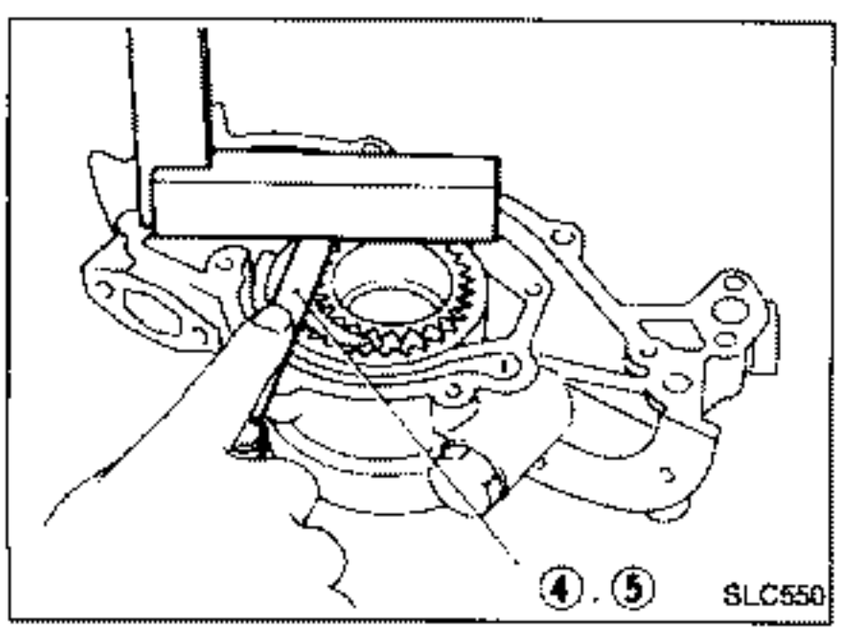

INSPECTION

Using a feeler gauge, check the following clearances:

Standard clearance:

Unit: mm (in)

Body to outer gear clearance ①	0.110 - 0.200 (0.0043 - 0.0079)
Inner gear to crescent clearance ②	0.223 - 0.333 (0.0088 - 0.0131)
Outer gear to crescent clearance ③	0.210 - 0.320 (0.0083 - 0.0126)
Housing to inner gear clearance ④	0.050 - 0.090 (0.0020 - 0.0035)
Housing to outer gear clearance ⑤	0.050 - 0.110 (0.0020 - 0.0043)

If any clearance exceeds the limit, replace gear set or entire oil pump assembly.

Oil Pump (Cont'd)

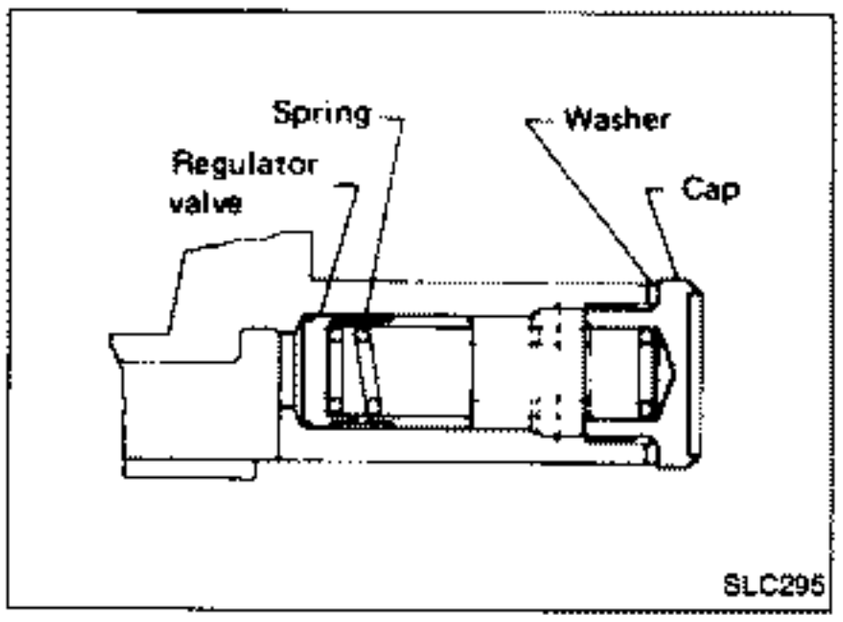

REGULATOR VALVE INSPECTION

1. Visually inspect components for wear and damage.
2. Check oil pressure regulator valve sliding surface and valve spring.
3. Coat regulator valve with engine oil and check to make sure that it falls smoothly into the valve hole by its own weight.

If damaged, replace regulator valve set or oil pump assembly.

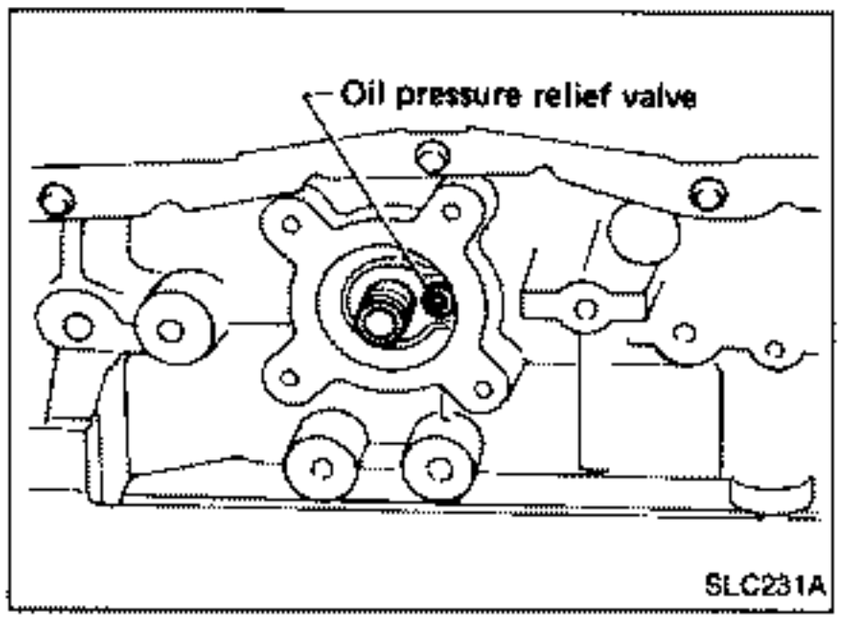

OIL PRESSURE RELIEF VALVE INSPECTION

Inspect oil pressure relief valve for movement, cracks and breaks by pushing the ball. If replacement is necessary, remove valve by prying it out with a suitable tool.
Install a new valve by tapping it in place.

Cooling Circuit

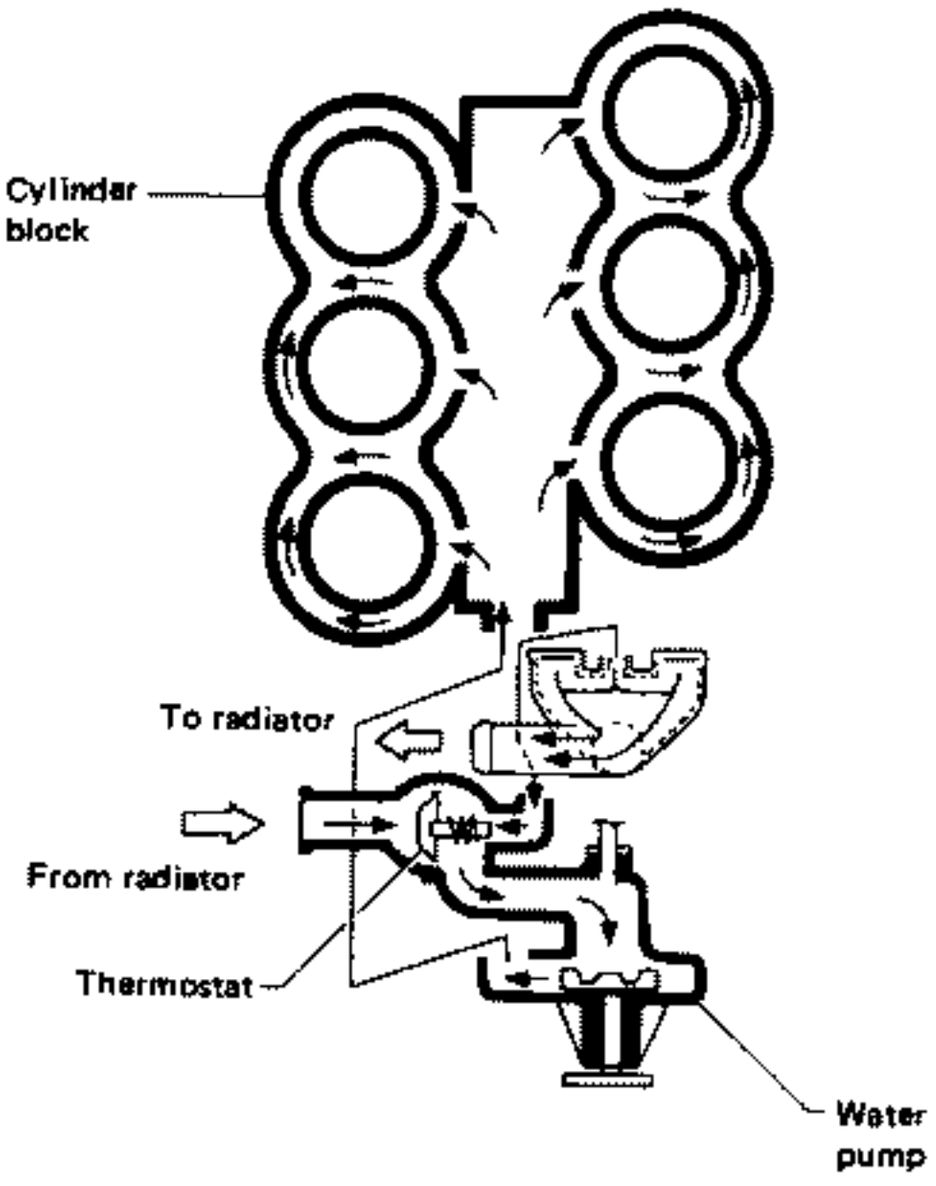

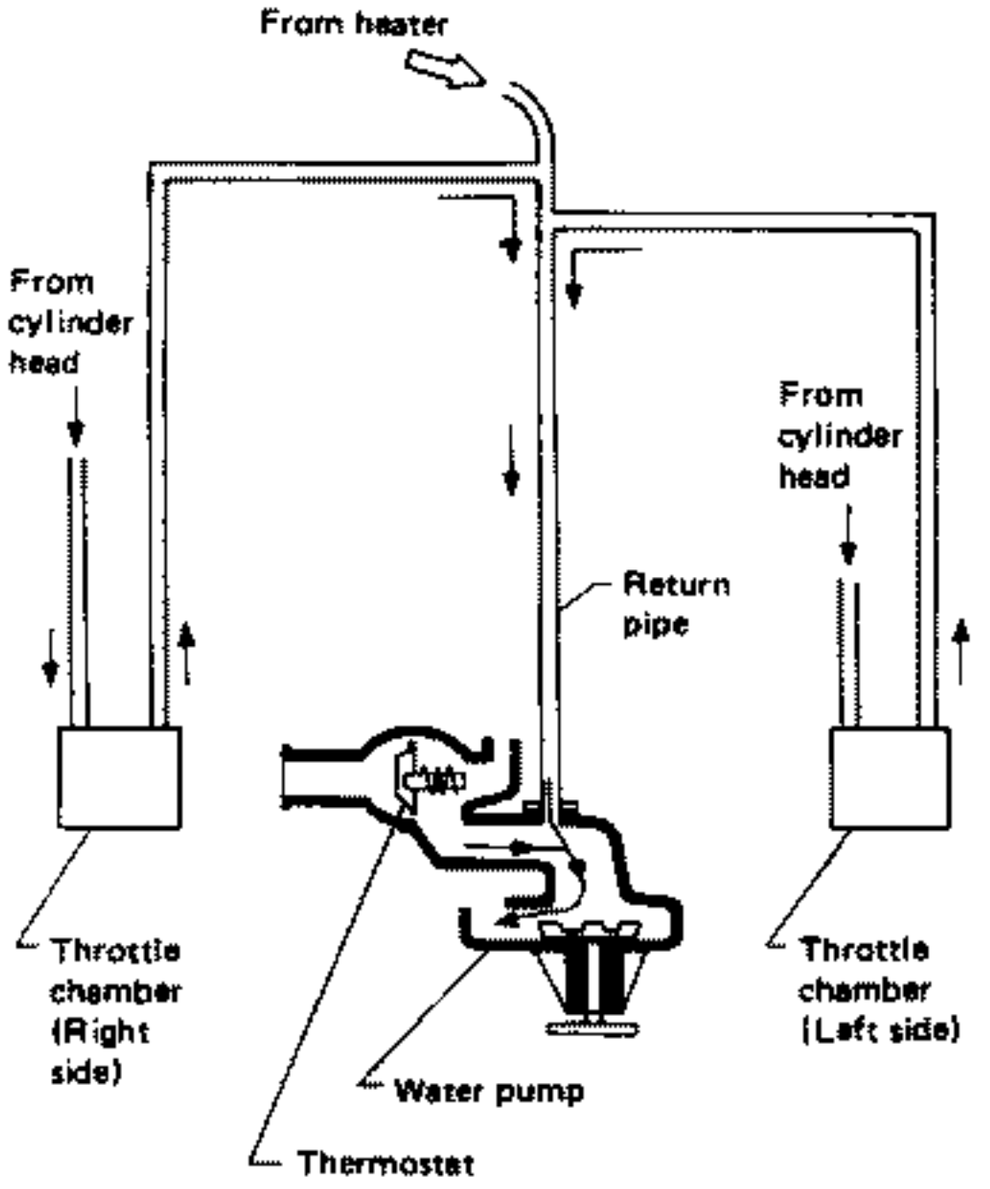

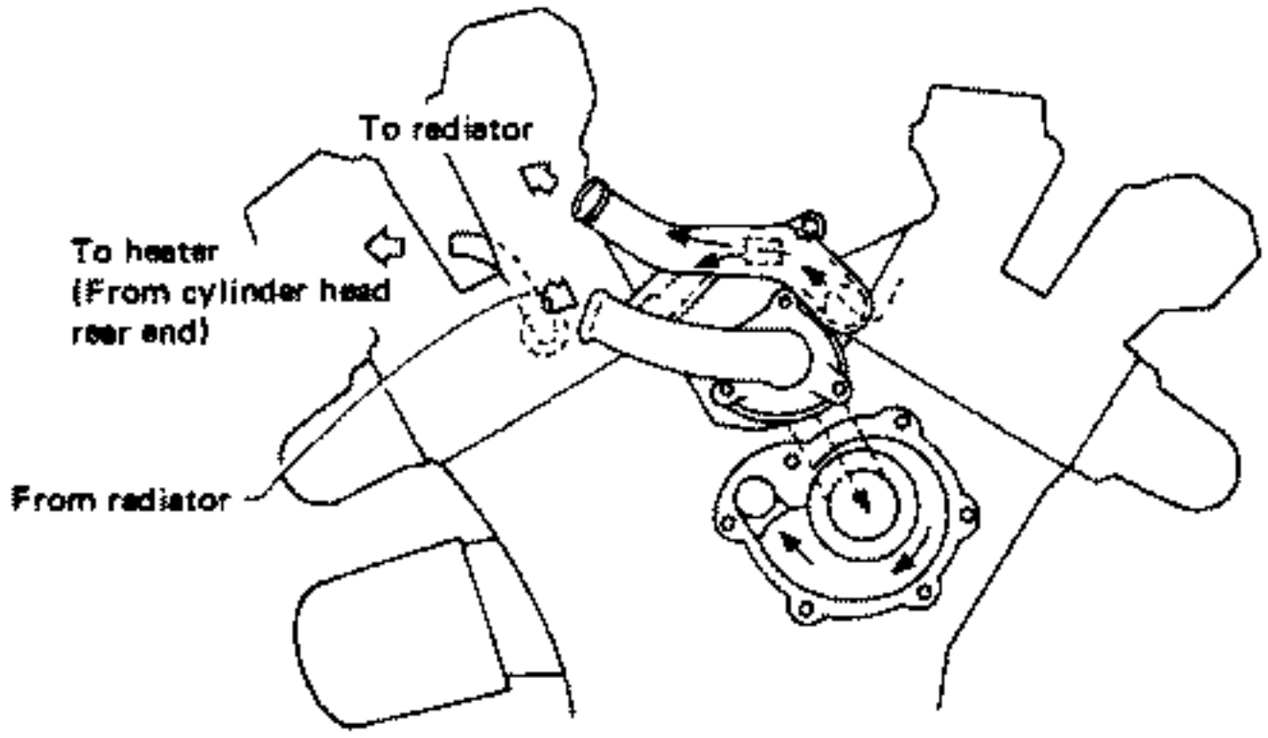

: Thermostat open

: Thermostat closed

: Turbo model only

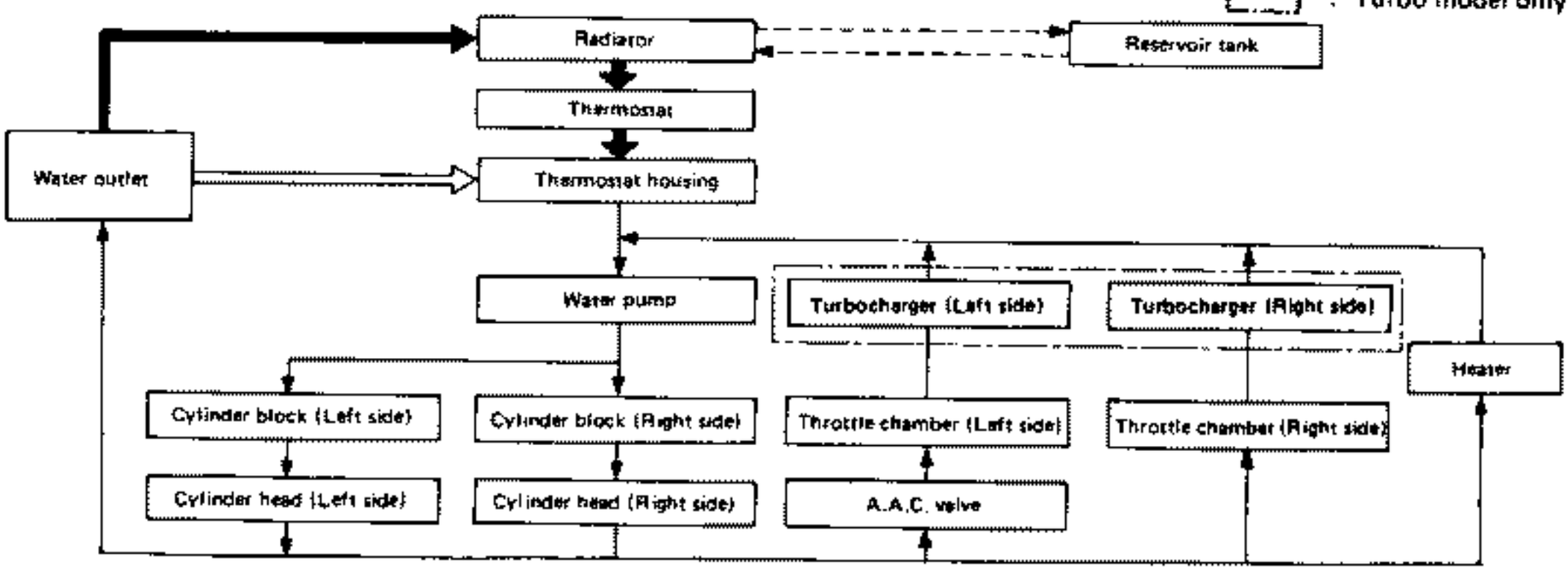

SLC343A

System Check

WARNING:
Never remove the radiator cap when the engine is hot; serious burns could be caused by high pressure fluid escaping from the radiator.
Wrap a thick cloth around the cap and carefully remove by turning it a quarter turn to allow built-up pressure to escape. Then continue to turn the cap until it can be removed safely.

CHECKING COOLING SYSTEM HOSES

Check hoses for improper attachment, leaks, cracks, damage, loose connections, chafing and deterioration.

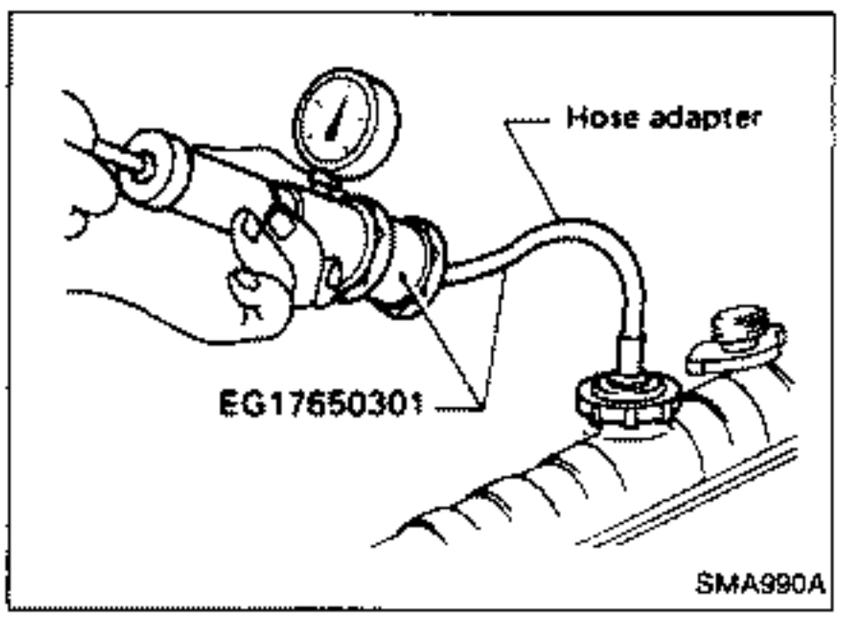

CHECKING COOLING SYSTEM FOR LEAKS

To check for leakage, apply pressure to the cooling system with a tester.

Testing pressure:
98 kPa (0.98 bar, 1.0 kg/cm^2, 14 psi)

CAUTION:
Higher than the specified pressure may cause radiator damage.

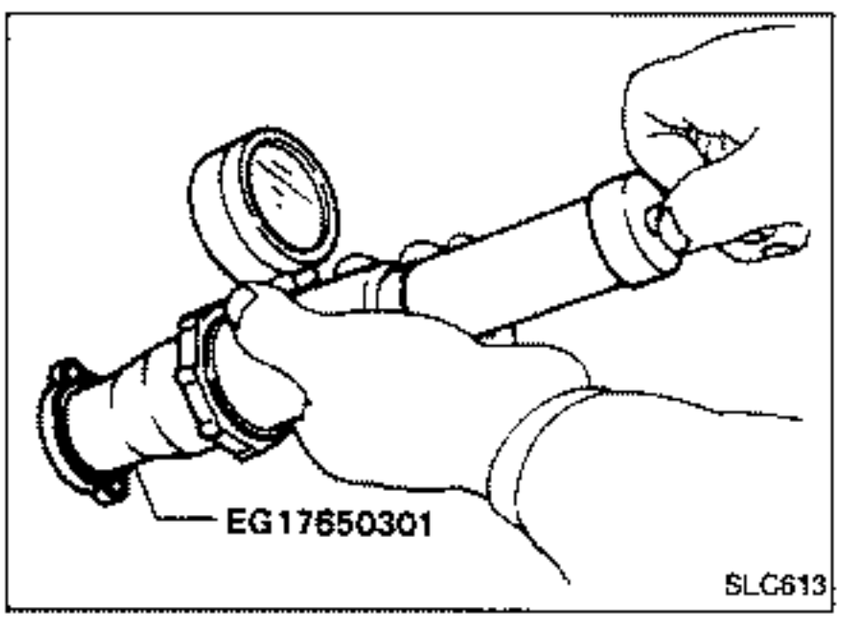

CHECKING RADIATOR CAP

To check radiator cap, apply pressure to cap with a tester.

Radiator cap relief pressure:
78 - 98 kPa (0.78 - 0.98 bar, 0.8 - 1.0 kg/cm^2, 11 - 14 psi)

Water Pump

REMOVAL AND INSTALLATION

1. Drain coolant from drain cocks on both sides of cylinder block and radiator.
2. Remove the following parts:

- Under cover
- Radiator
- Drive belts
- Cooling fan and coupling
- Water inlet and outlet

Water Pump (Cont'd)

- Crank pulley
- Timing belt cover

3. Remove water pump.
4. After repairing or replacing water pump, install any parts removed in reverse order of removal.

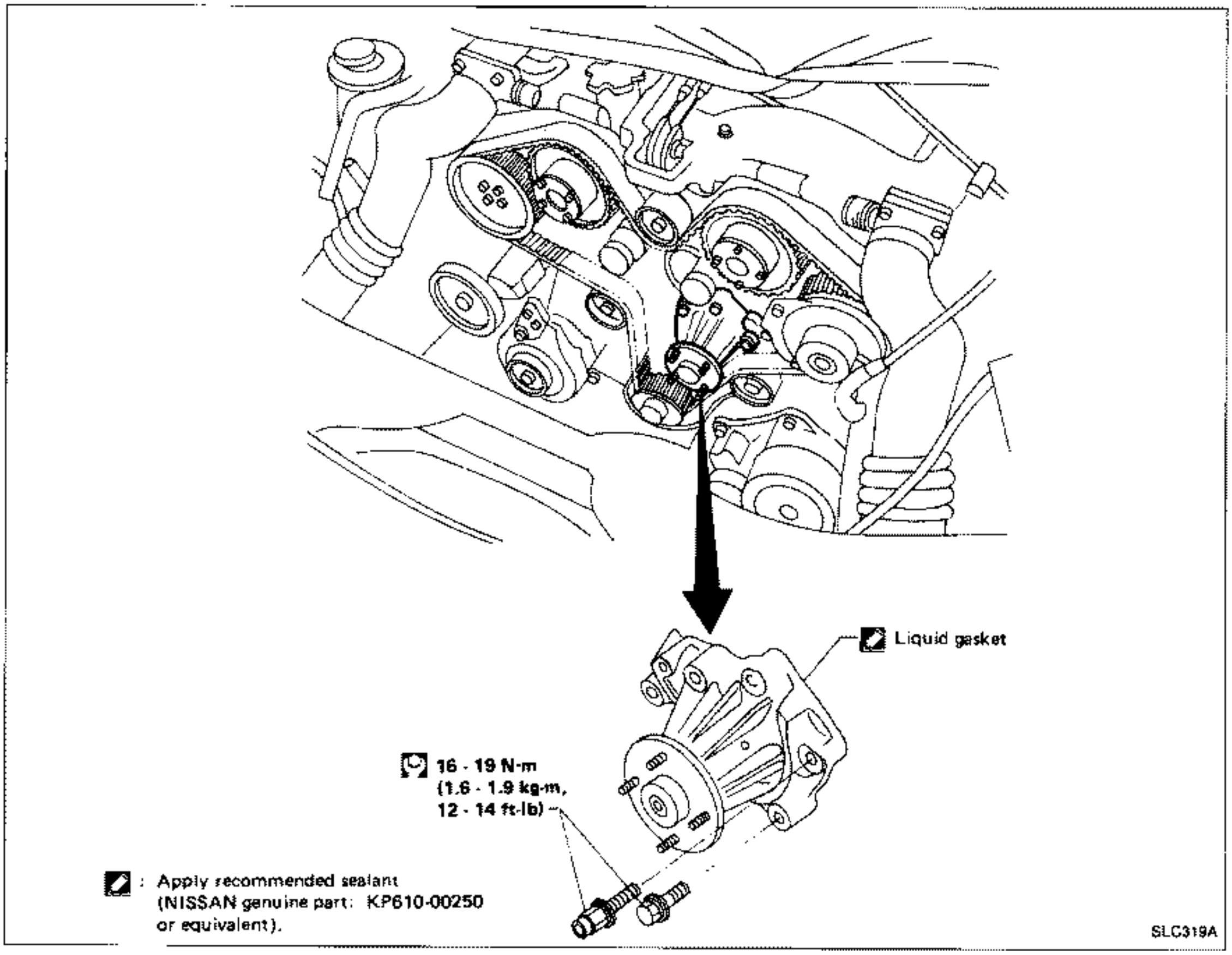

CAUTION:

- **When removing water pump assembly, be careful not to get coolant on timing belt.**
- **Water pump cannot be disassembled and should be replaced as a unit.**
- **After installing water pump, connect hose and clamp securely, then check for leaks using radiator cap tester.**

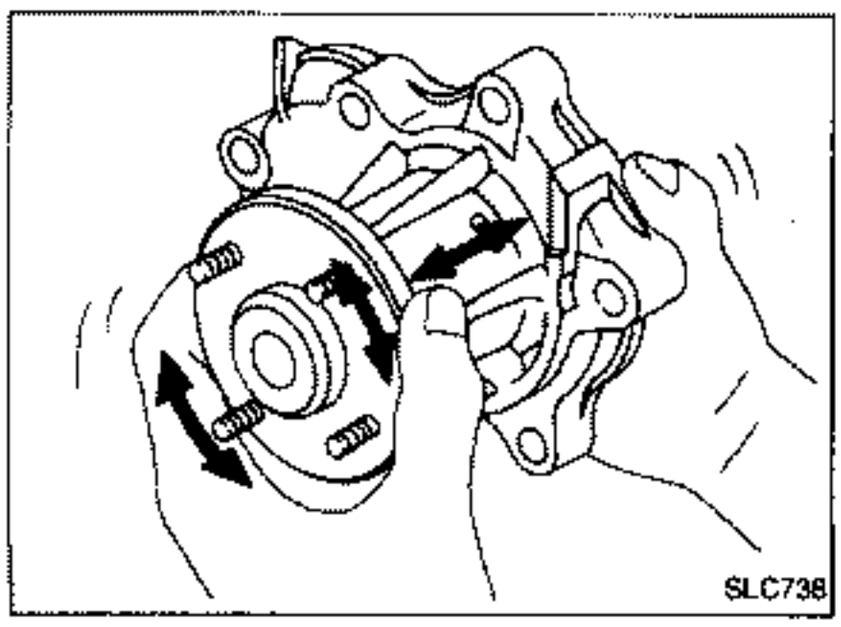

INSPECTION

1. Check for badly rusted or corroded vanes and body assembly.
2. Check for rough operation due to excessive end play.

Thermostat

REMOVAL AND INSTALLATION

1. Drain coolant from drain cocks on both sides of cylinder block and radiator.
2. Remove the following parts:
- Under cover
- Radiator upper hose
- Radiator shroud
- Fan belt
- Cooling fan and coupling
- Water inlet
3. Remove thermostat.

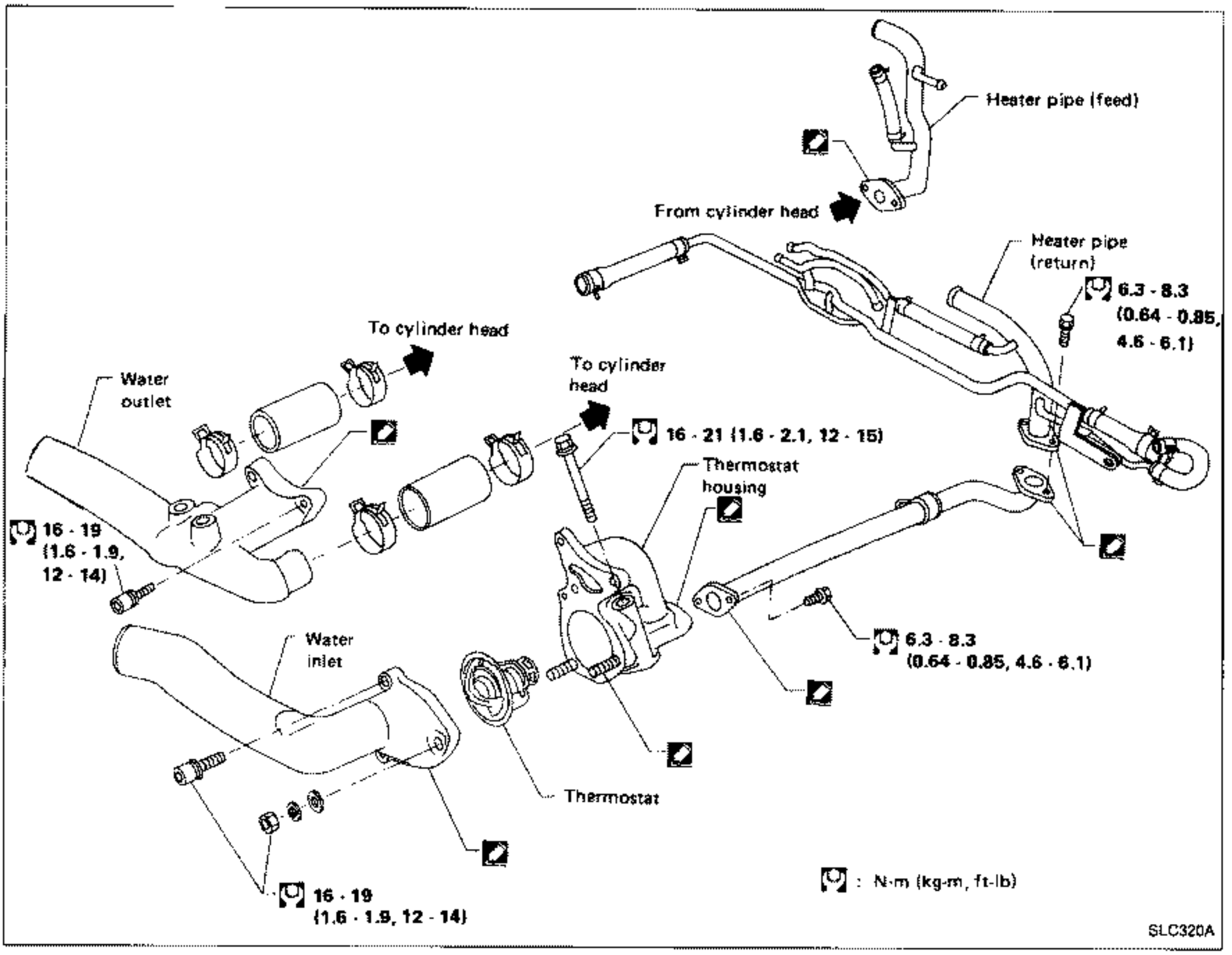

4. After repairing or replacing thermostat, install thermostat with jiggle valve facing upward.

Thermostat (Cont'd)

INSPECTION

1. Check valve seating condition at ordinary room temperatures. It should seat tightly.

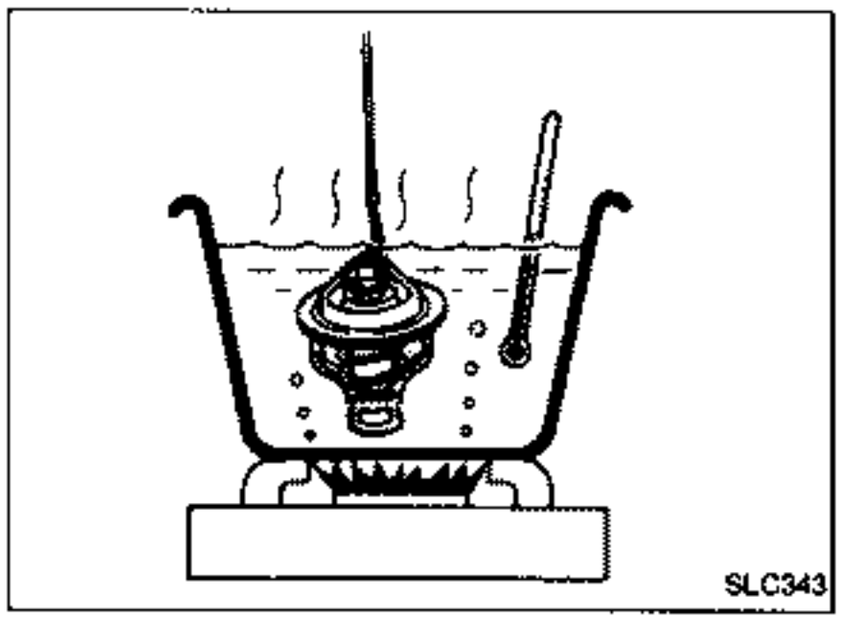

2. Check valve opening temperature and maximum valve lift.

		Standard
Valve opening temperature	°C (°F)	76.5 (170)
Maximum valve lift	mm/°C (in/°F)	10/90 (0.39/194)

3. Then check if valve is 5°C (9°F) below valve opening temperature.

- **After installation, run engine for a few minutes, and check for leaks.**
- **Be careful not to spill coolant over engine compartment. Use a rag to absorb coolant.**

Radiator

REMOVAL AND INSTALLATION

1. Drain coolant from radiator drain cock.
2. Remove under cover.
3. Disconnect radiator upper and lower hoses.
4. Remove A/T oil cooler hoses. (A/T model only)
5. Remove radiator lower shroud.
6. Remove radiator.
7. After repairing or replacing radiator, install any part removed in reverse order of removal.

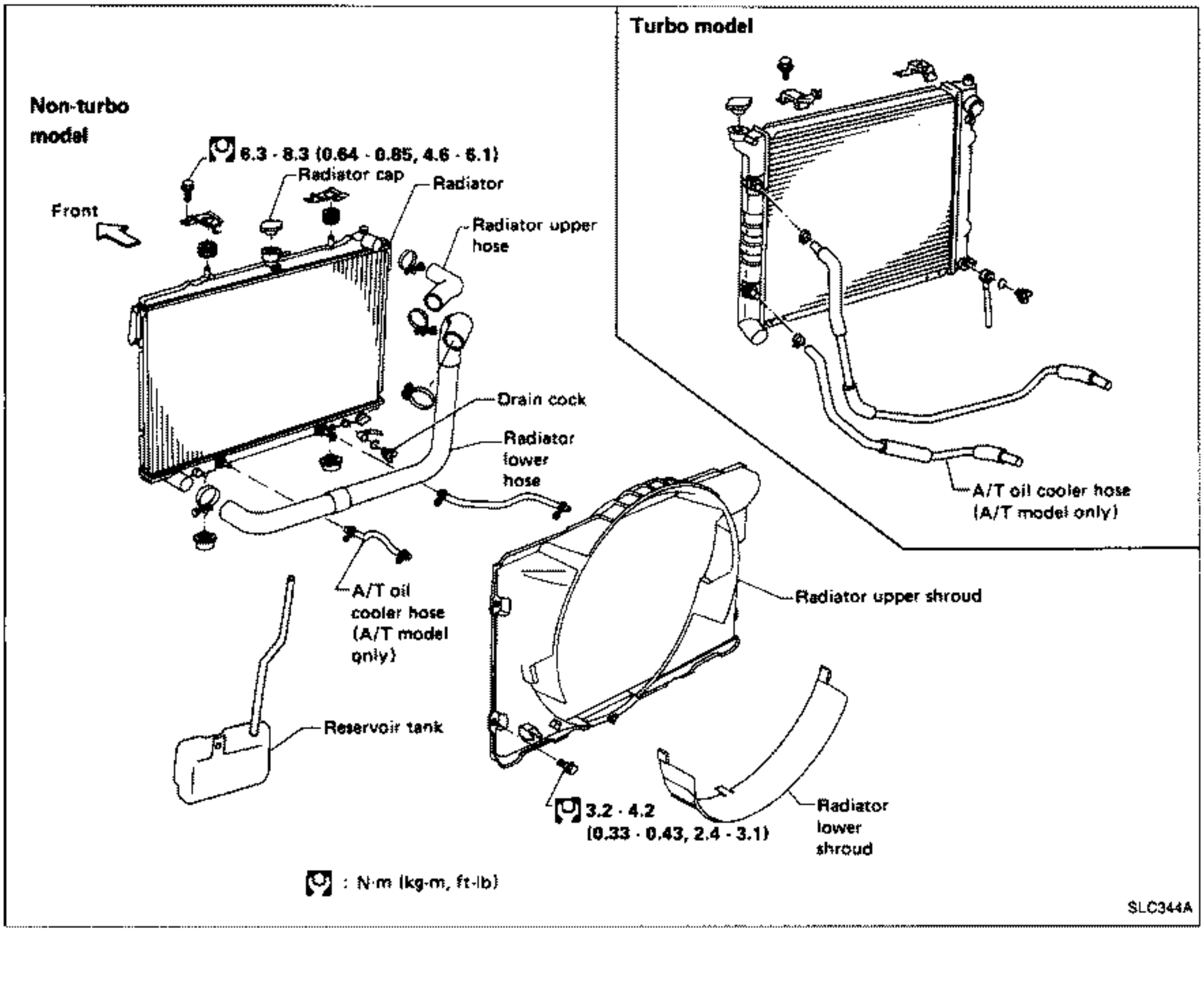

Electric Cooling Fan Control System

Radiator (Condenser) fan is controlled by E.C.C.S. control unit. For details, refer to EF & EC section.

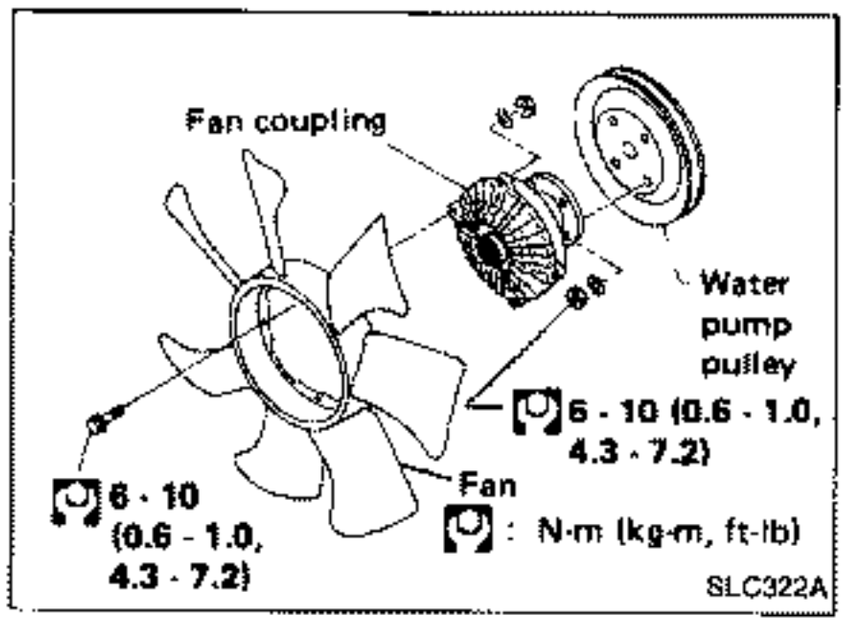

Cooling Fan

DISASSEMBLY AND ASSEMBLY

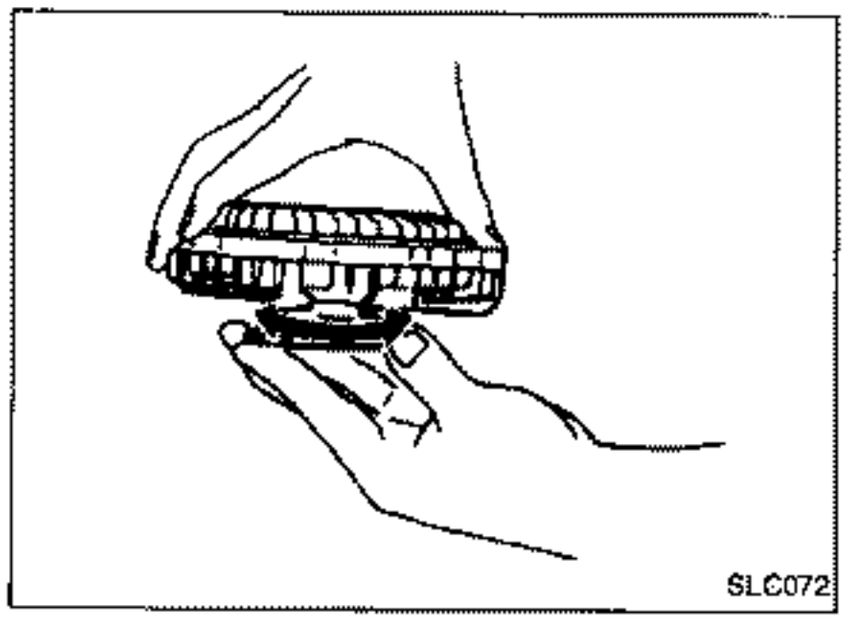

INSPECTION

Check fan coupling for rough operation, oil leakage or bent bimetal.

Engine Lubrication System

Oil pressure check

Engine rpm	Approximate discharge pressure kPa (bar, kg/cm^2, psi)
Idle speed	More than 78 (0.78, 0.8, 11)
3,000	353 - 451 (3.53 - 4.51, 3.6 - 4.6, 51 - 65)

Oil pump

Unit: mm (in)

Body to outer gear clearance ①	0.110 - 0.200 (0.0043 - 0.0079)
Inner gear to crescent clearance ②	0.223 - 0.333 (0.0088 - 0.0131)
Outer gear to crescent clearance ③	0.210 - 0.320 (0.0083 - 0.0126)
Housing to inner gear side clearance ④	0.050 - 0.090 (0.0020 - 0.0035)
Housing to outer gear side clearance ⑤	0.050 - 0.110 (0.0020 - 0.0043)

Engine Cooling System

Thermostat

	Standard
Valve opening temperature °C (°F)	76.5 (170)
Maximum valve lift mm/°C (in/°F)	10/90 (0.39/194)

ENGINE FUEL & EMISSION CONTROL SYSTEM

SECTION EF & EC

CONTENTS

PREPARATION ..... EF & EC- 2
PRECAUTIONS ..... EF & EC- 3
ENGINE AND EMISSION CONTROL OVERALL SYSTEM ..... EF & EC- 4
ENGINE AND EMISSION CONTROL PARTS DESCRIPTION ..... EF & EC- 14
ENGINE AND EMISSION CONTROL SYSTEM DESCRIPTION ..... EF & EC- 21
IDLE SPEED/IGNITION TIMING/IDLE MIXTURE RATIO INSPECTION ..... EF & EC- 37
TROUBLE DIAGNOSES ..... EF & EC- 42
FUEL INJECTION CONTROL SYSTEM INSPECTION ..... EF & EC-185
EVAPORATIVE EMISSION CONTROL SYSTEM ..... EF & EC-187
CRANKCASE EMISSION CONTROL SYSTEM ..... EF & EC-189
SERVICE DATA AND SPECIFICATIONS (S.D.S.) ..... EF & EC-190

For assistance with wiring diagrams:
- **Read GI section, "HOW TO READ WIRING DIAGRAMS".**
- **See EL section, "POWER SUPPLY ROUTING" for power distribution circuit.**

When you perform trouble diagnoses, read GI section, "HOW TO FOLLOW FLOW CHART IN TROUBLE DIAGNOSES".

SPECIAL SERVICE TOOLS

Tool number Tool name	Description	
① KV109D0010 Ignition timing adapter coil ② KV10114200 Adapter harness	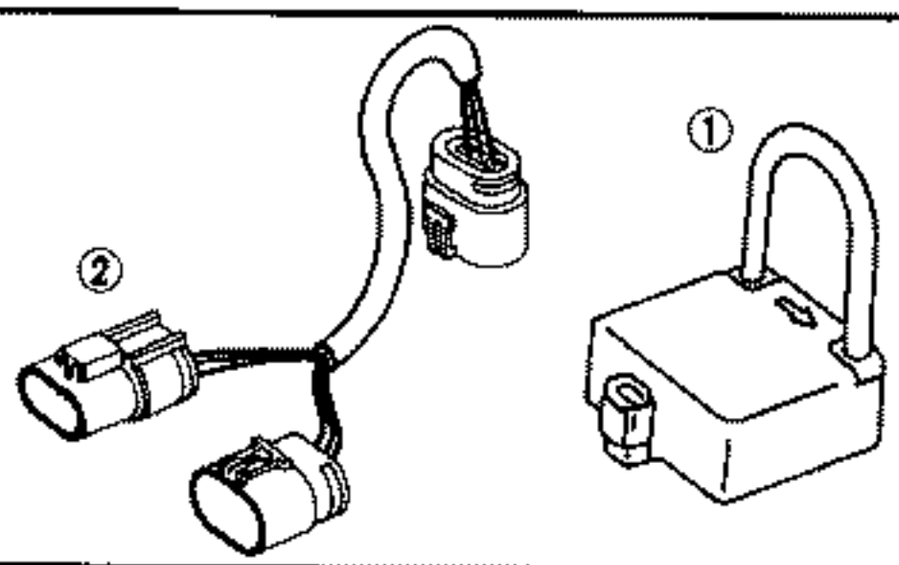	Measuring ignition timing
KV10114400 Exhaust gas sensor wrench	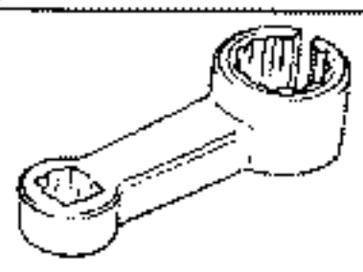	Loosening or tightening exhaust gas sensor

E.C.U.

- Do not disassemble E.C.C.S. control unit (E.C.U.).
- Do not turn diagnosis mode selector forcibly.
- If a battery terminal is disconnected, the memory will return to the ROM value. The E.C.C.S. will now start to self-control at its initial value. Engine operation can vary slightly when the terminal is disconnected. However, this is not an indication of a problem. Do not replace parts because of a slight variation.

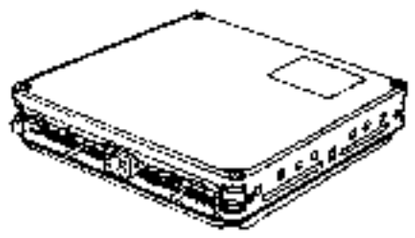

BATTERY

- Always use a 12 volt battery as power source.
- Do not attempt to disconnect battery cables while engine is running.

INJECTOR

- Do not disconnect injector harness connectors with engine running.
- Do not apply battery power directly to injectors.

E.C.C.S. PARTS HANDLING

- Handle air flow meter carefully to avoid damage.
- Do not disassemble air flow meter.
- Do not clean air flow meter with any type of detergent.
- Do not disassemble auxiliary air control valve.
- Even a slight leak in the air intake system can cause serious problems.
- Do not shock or jar the crank angle sensor.



WHEN STARTING

- Do not depress accelerator pedal when starting.
- Immediately after starting, do not rev up engine unnecessarily.
- Do not rev up engine just prior to shutdown.

WIRELESS EQUIPMENT

- When installing C.B. ham radio or a mobile phone, be sure to observe the following as it may adversely affect electronic control systems depending on its installation location.

1) Keep the antenna as far as possible from the electronic control units.
2) Keep the antenna feeder line more than 20 cm (7.9 in) away from the harness of electronic controls.
   Do not let them run parallel for a long distance.
3) Adjust the antenna and feeder line so that the standing-wave ratio can be kept smaller.
4) Be sure to ground the radio to vehicle body.

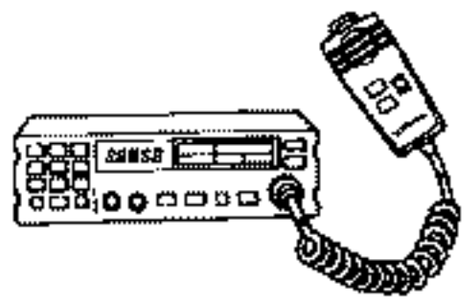

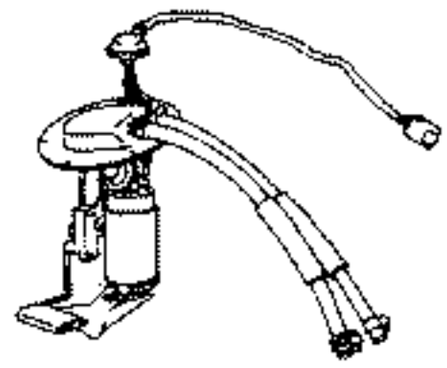

FUEL PUMP

- Do not operate fuel pump when there is no fuel in lines.
- Tighten fuel hose clamps to the specified torque.

E.C.C.S. HARNESS HANDLING

- Securely connect E.C.C.S. harness connectors.
  A poor connection can cause an extremely high (surge) voltage to develop in coil and condenser, thus resulting in damage to ICs.
- Keep E.C.C.S. harness at least 10 cm (3.9 in) away from adjacent harnesses, to prevent an E.C.C.S. system malfunction due to receiving external noise, degraded operation of ICs, etc.
- Keep E.C.C.S. parts and harnesses dry.
- Before removing parts, turn off ignition switch and then disconnect battery ground cable.

SEF323I

E.C.C.S. Component Parts Location

NON-TURBO MODEL

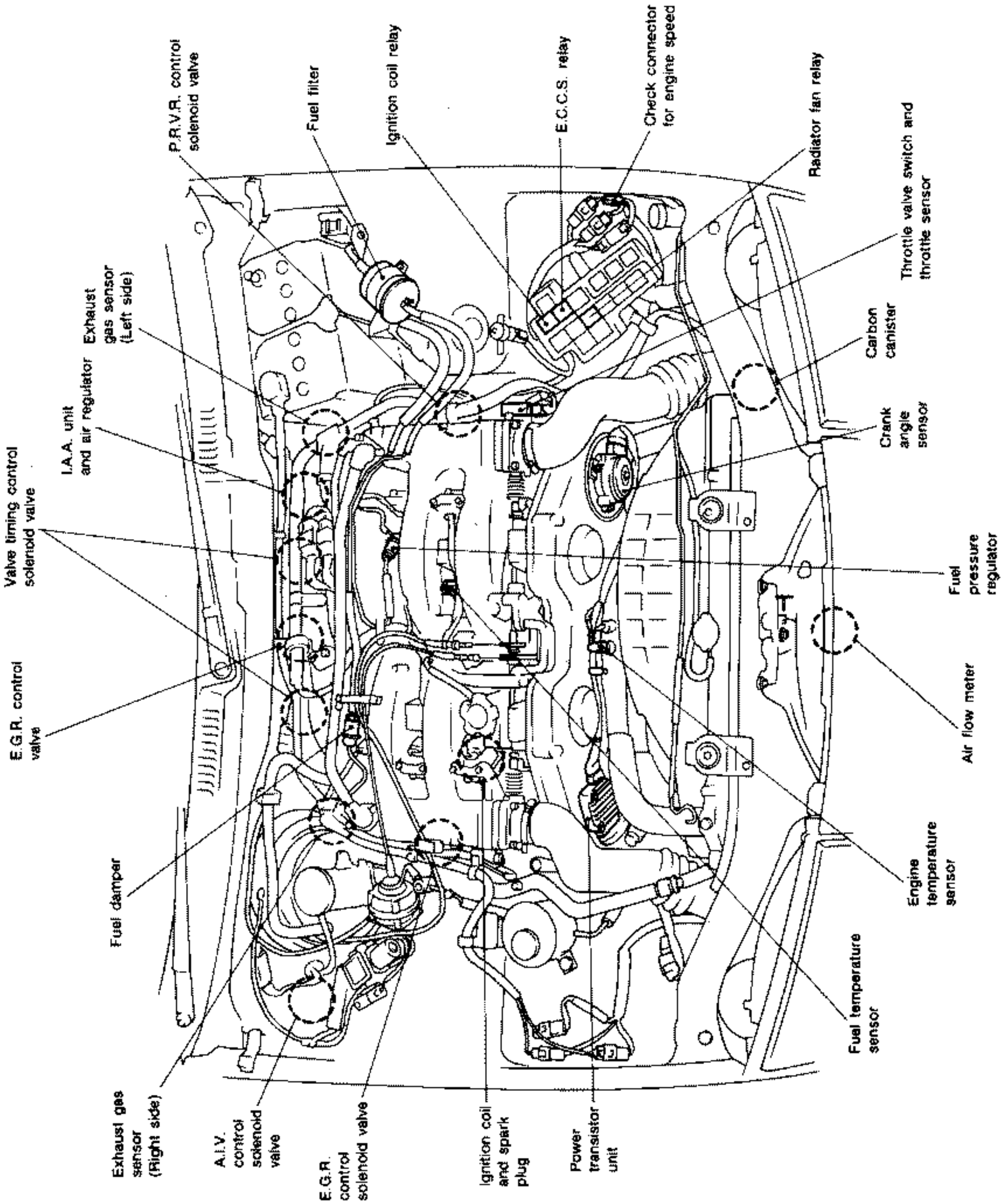

SEF986J

E.C.C.S. Component Parts Location (Cont'd)

TURBO MODEL

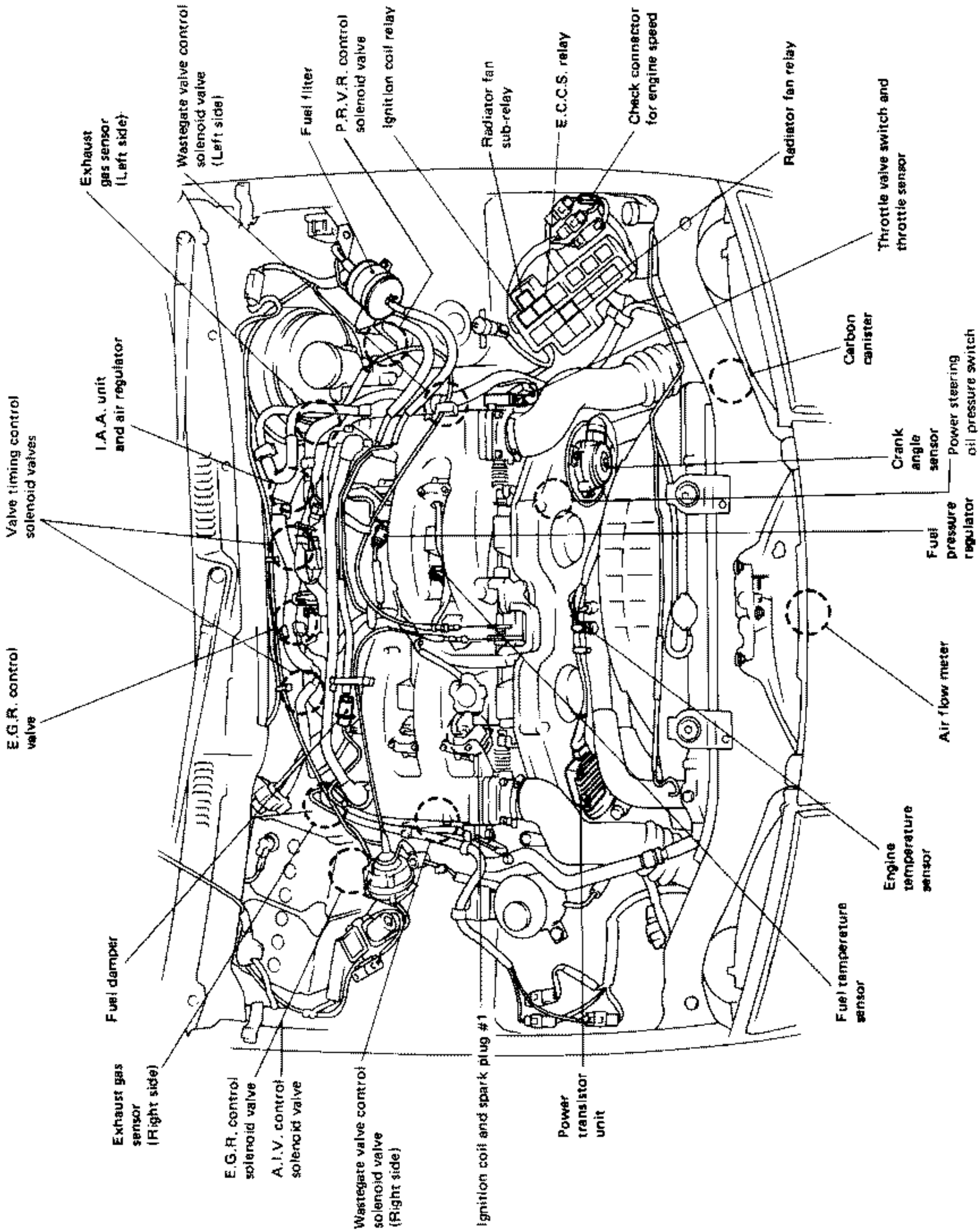

SEF194J

E.C.C.S. Component Parts Location (Cont'd)

NON-TURBO MODEL

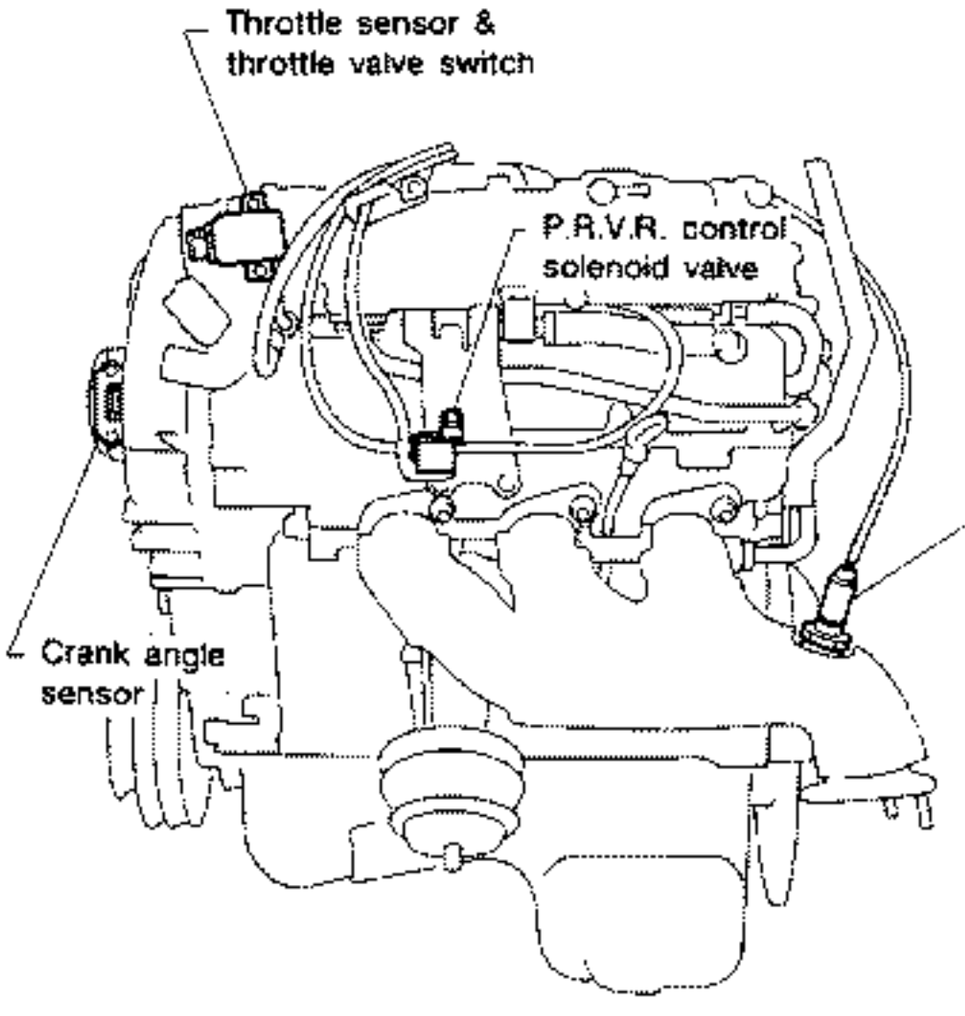

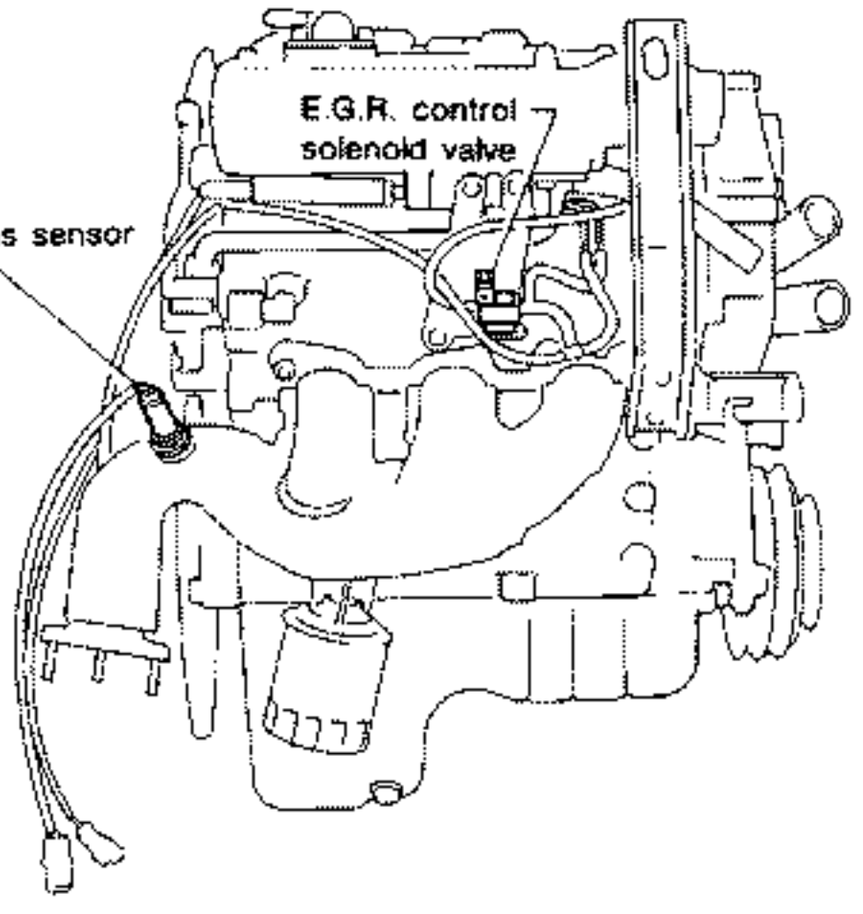

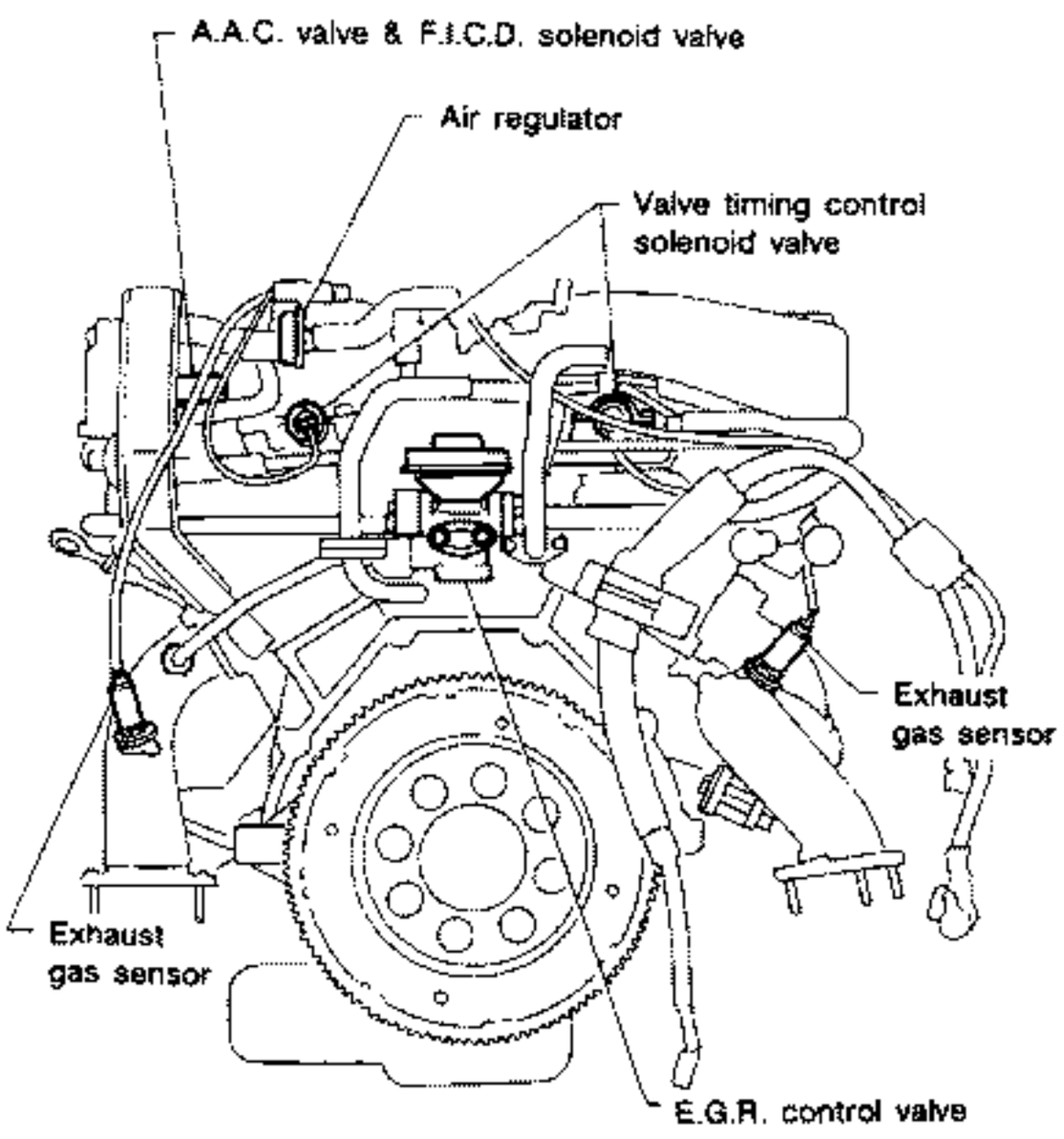

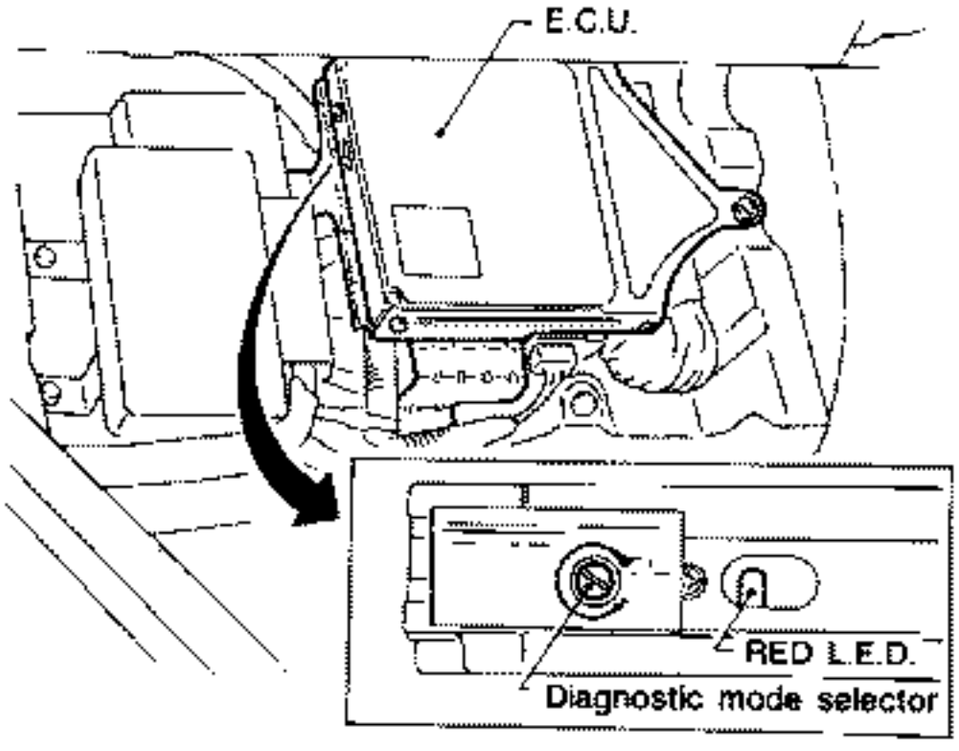

SEF014K

E.C.C.S. Component Parts Location (Cont'd)

TURBO MODEL

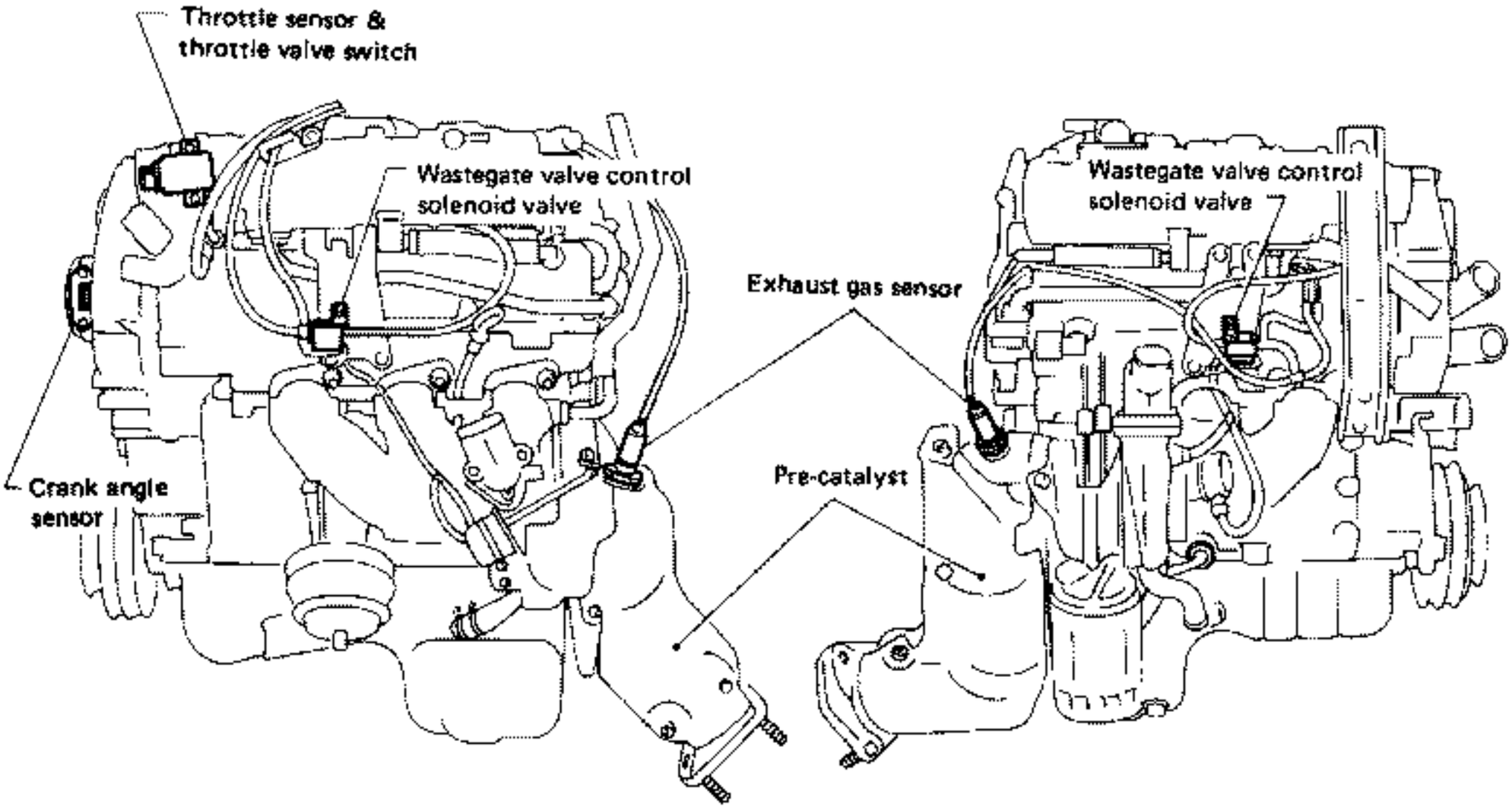

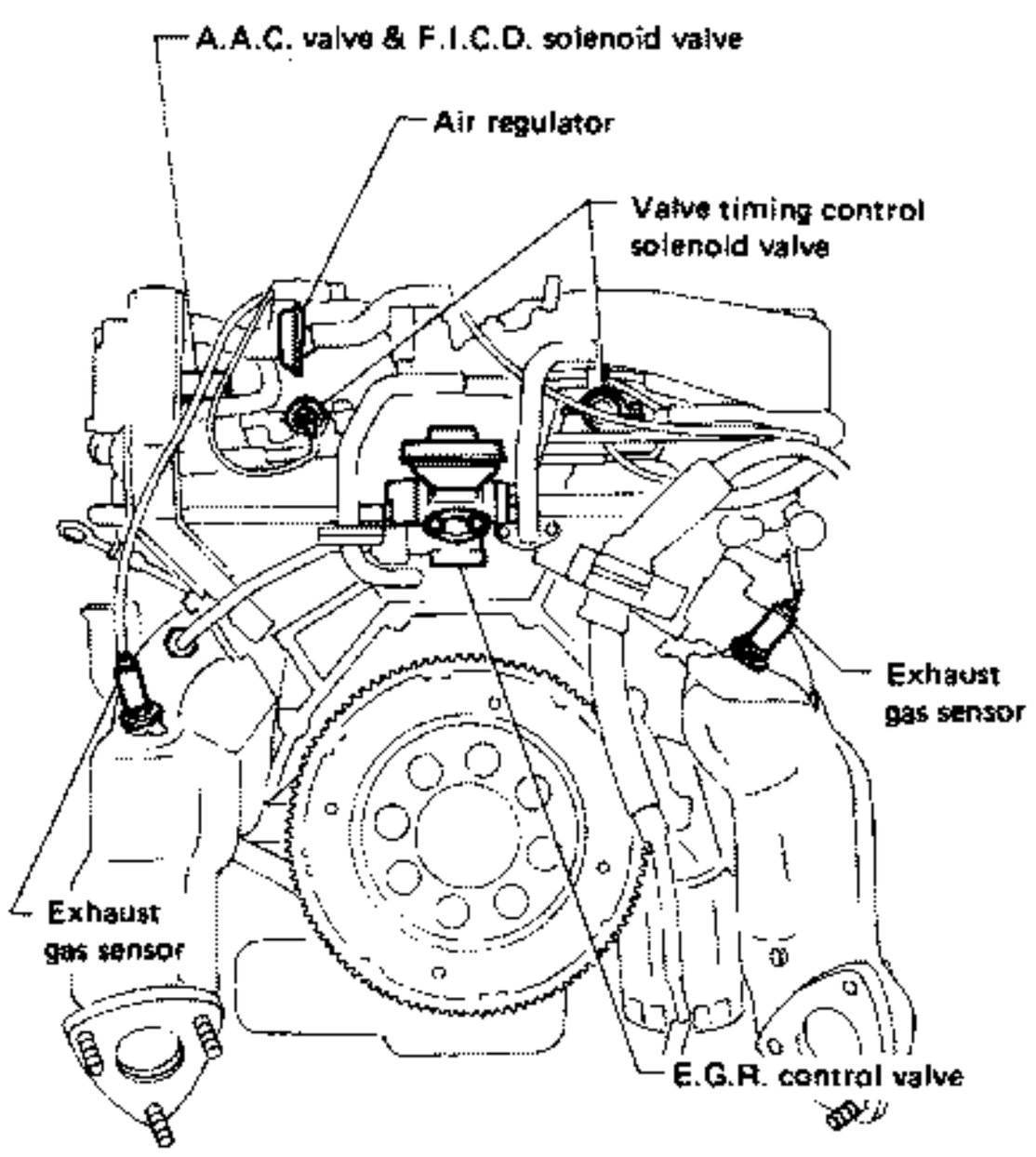

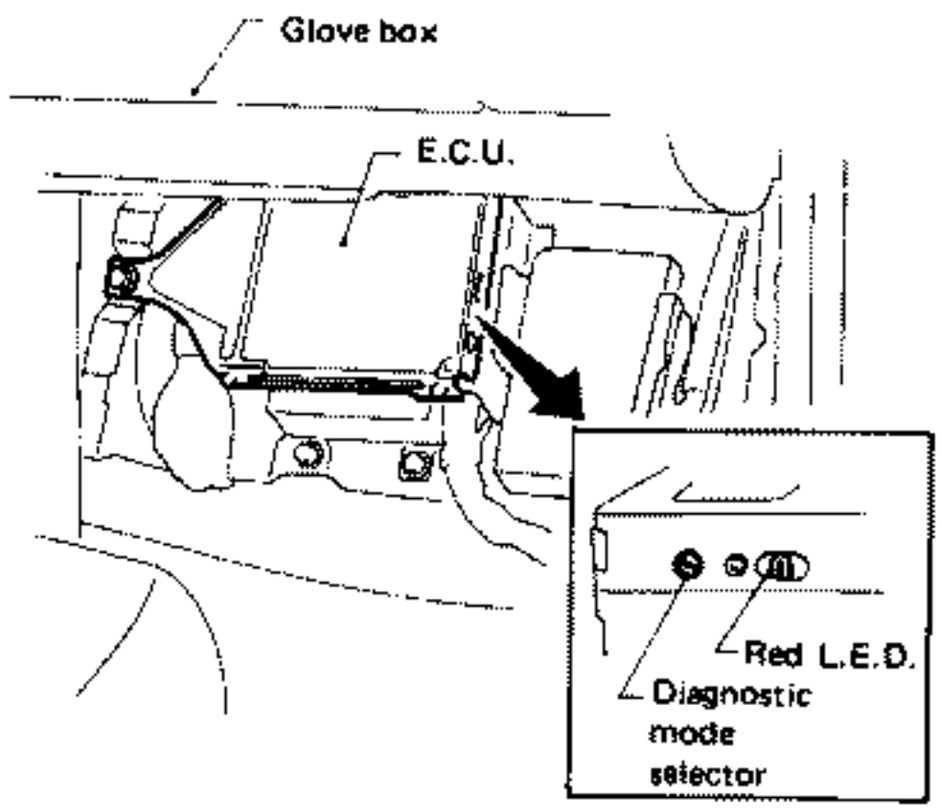

SEF447K

System Diagram

NON-TURBO MODEL

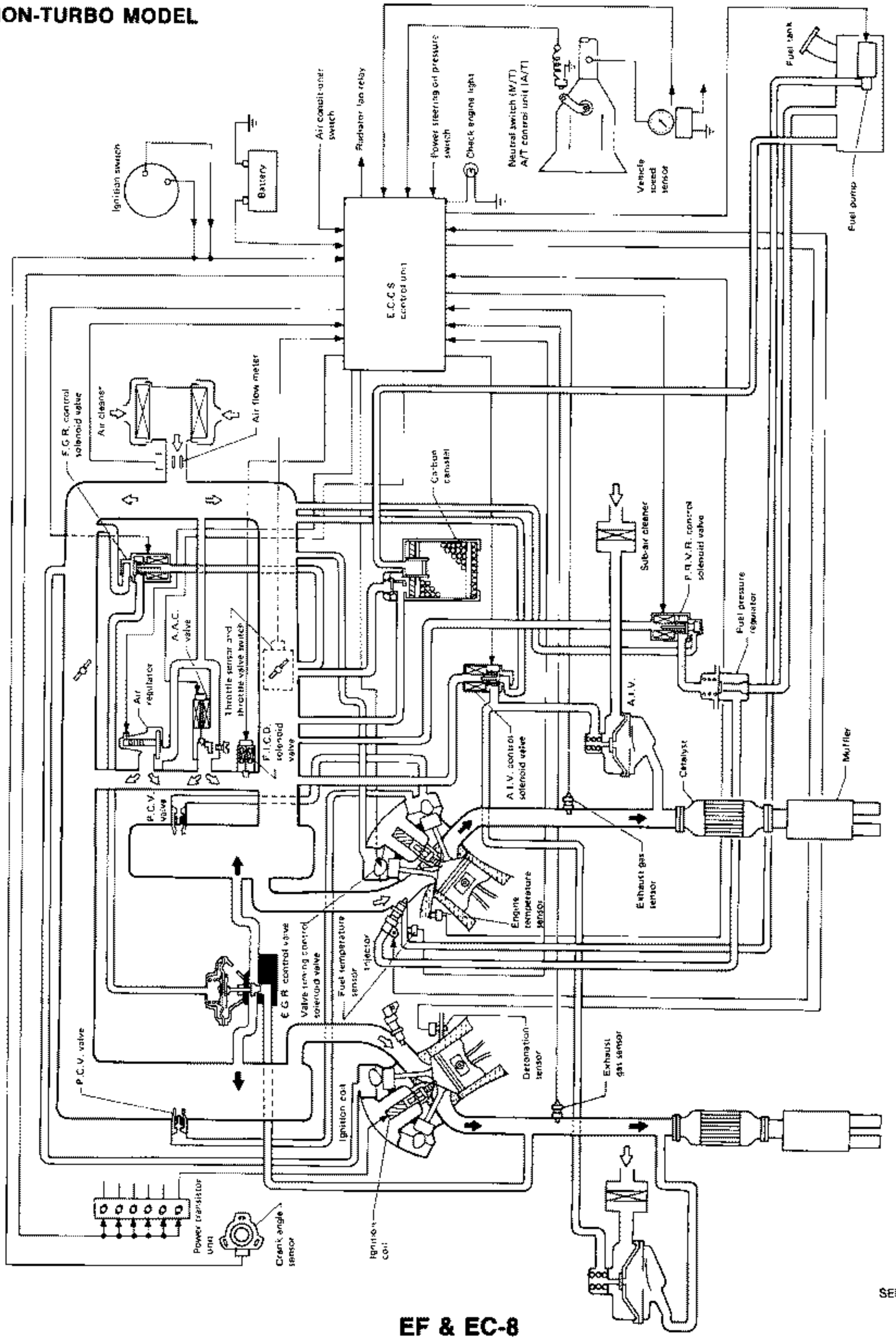

SEF987J

System Diagram (Cont'd)

TURBO MODEL

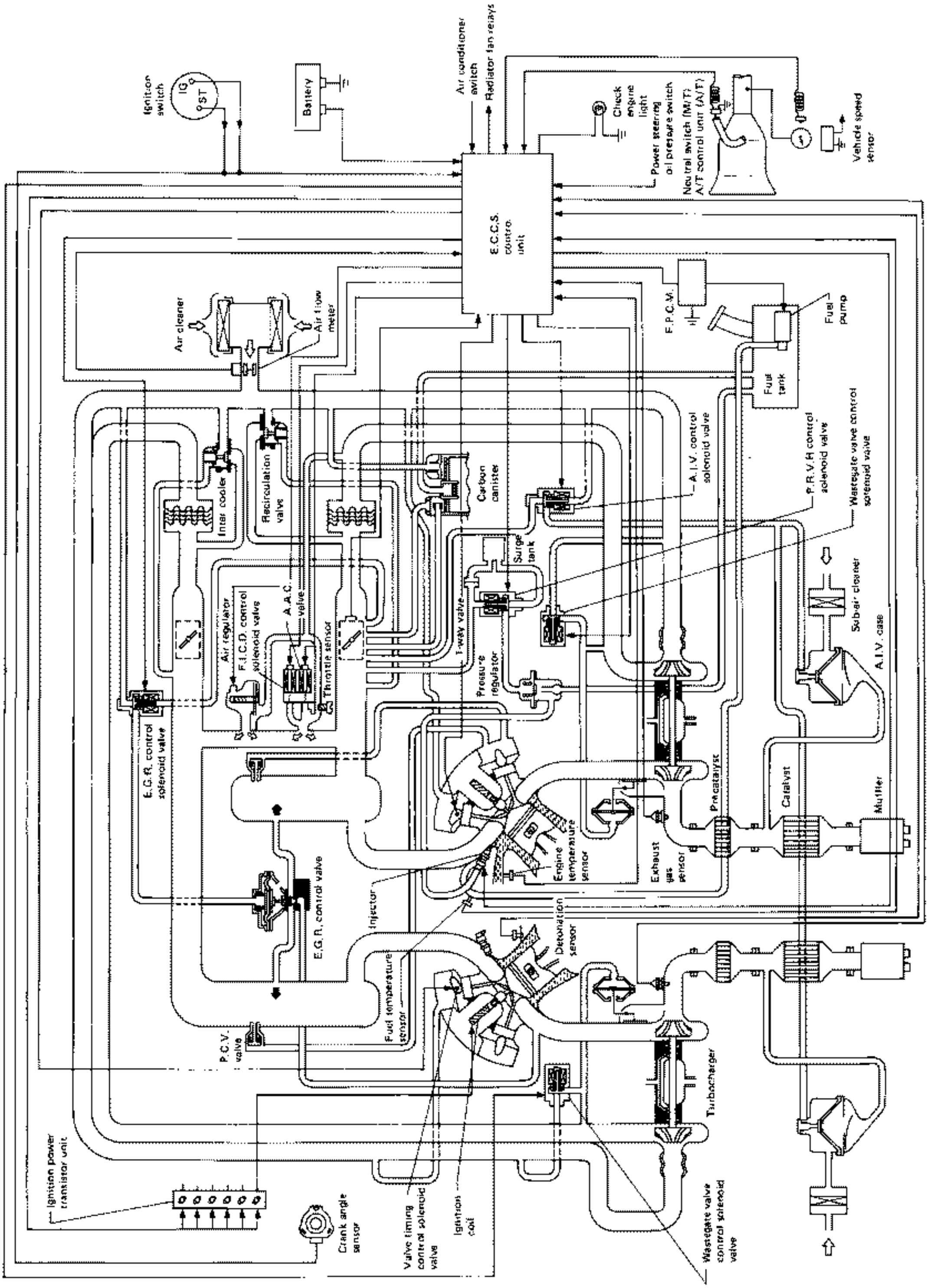

SEF448K

System Chart

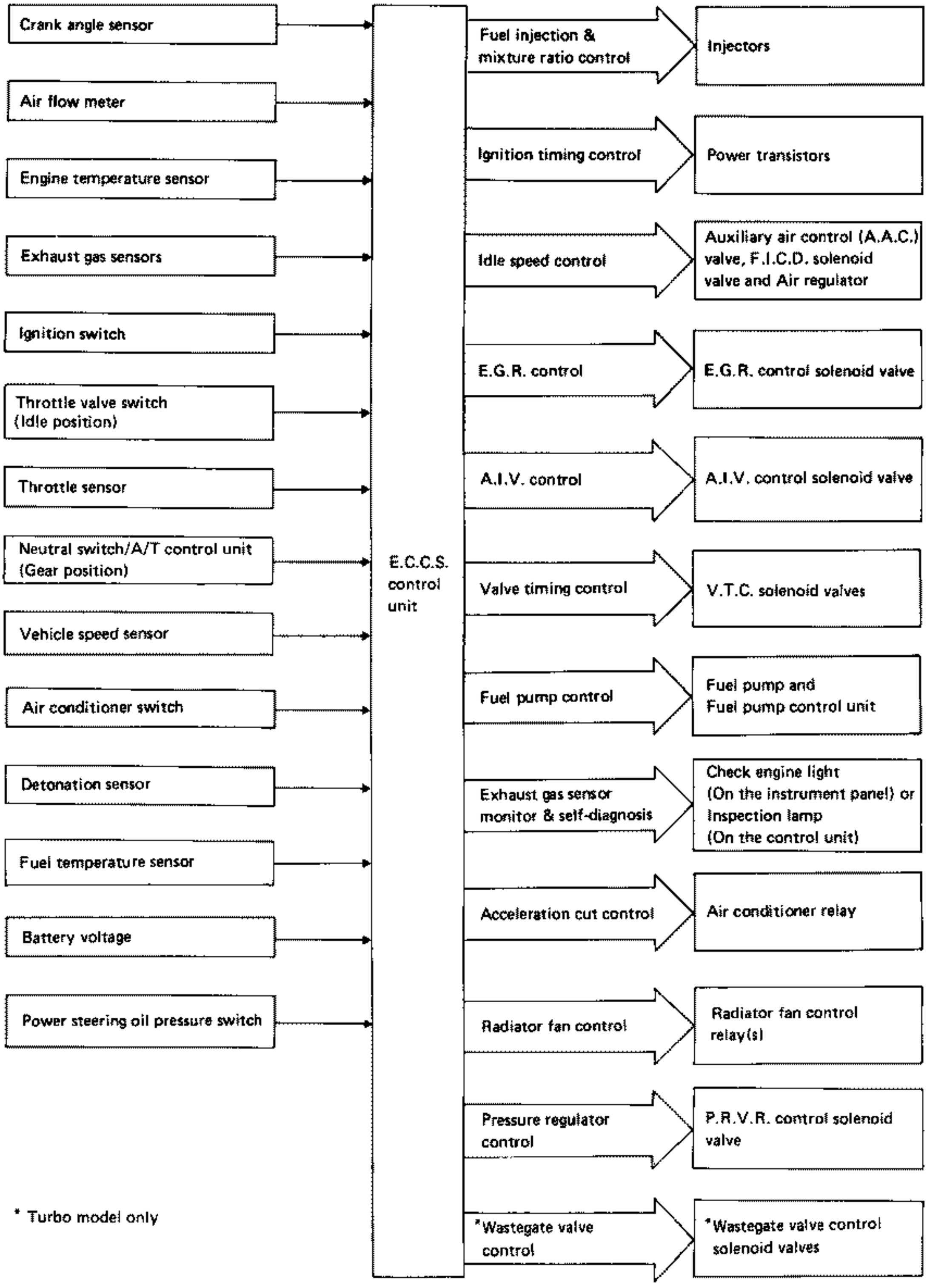

* Turbo model only

Vacuum Hose Drawing

NON-TURBO MODEL

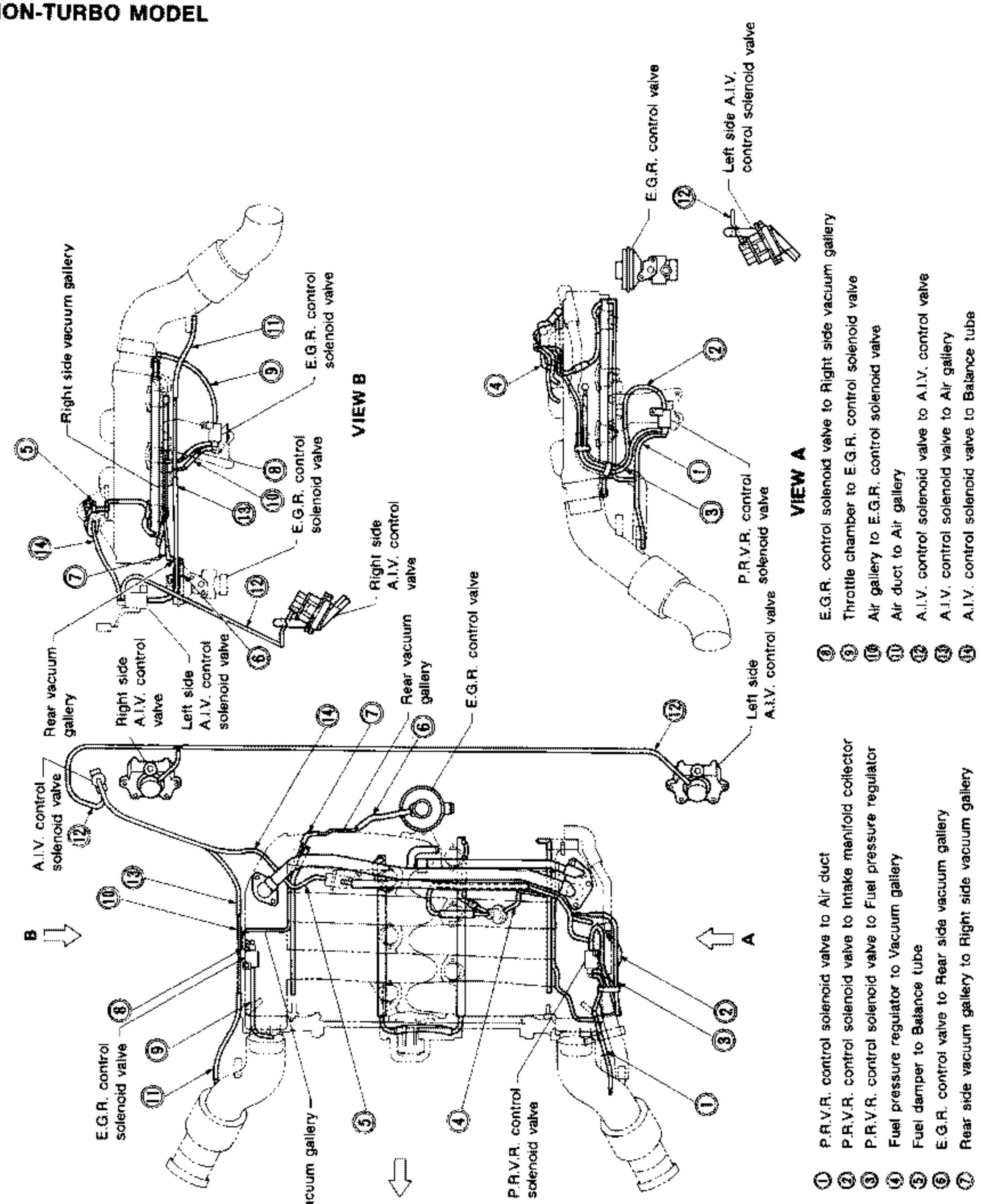

SEF020K

TURBO MODEL

Vacuum Hose Drawing (Cont'd)

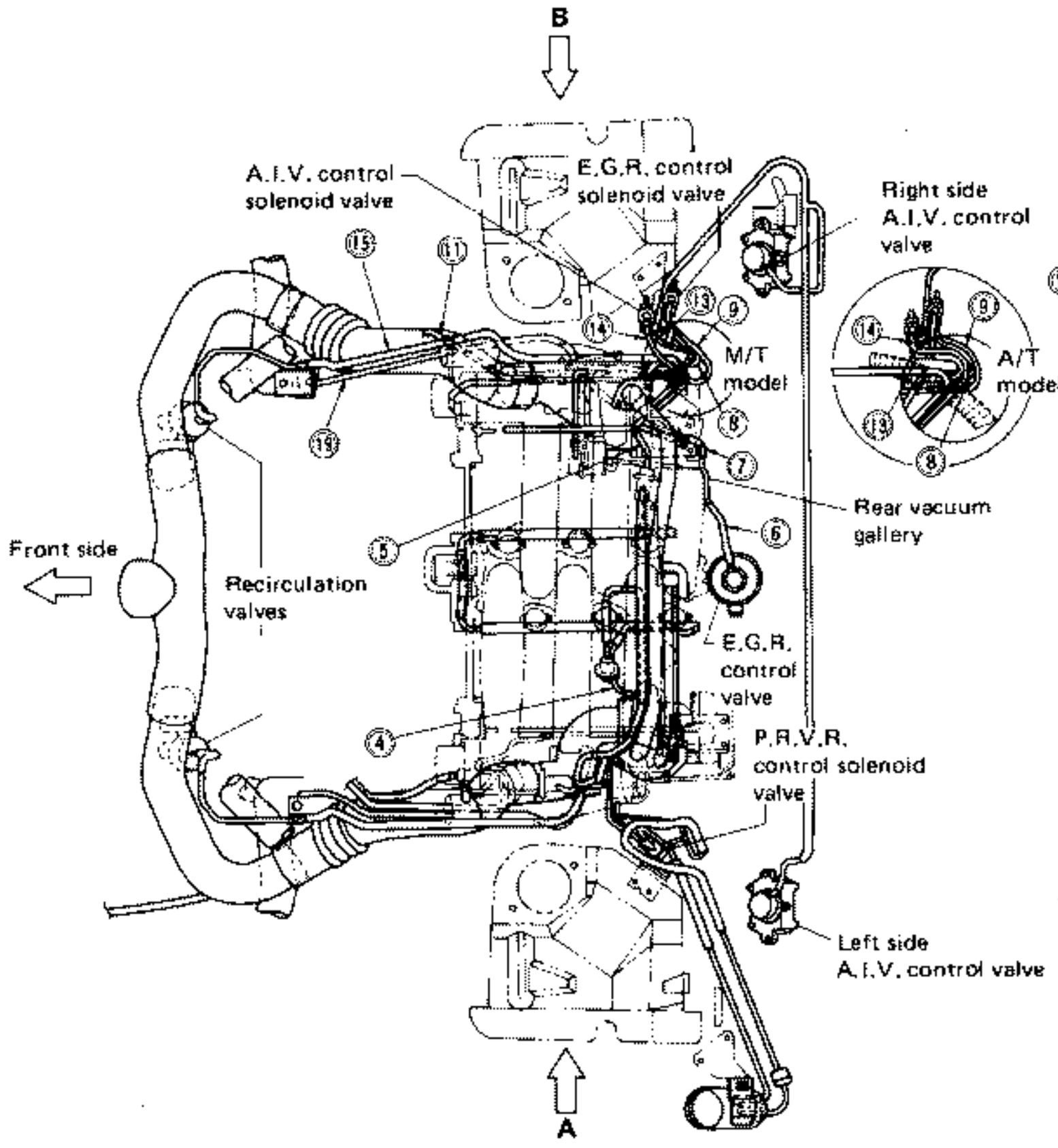

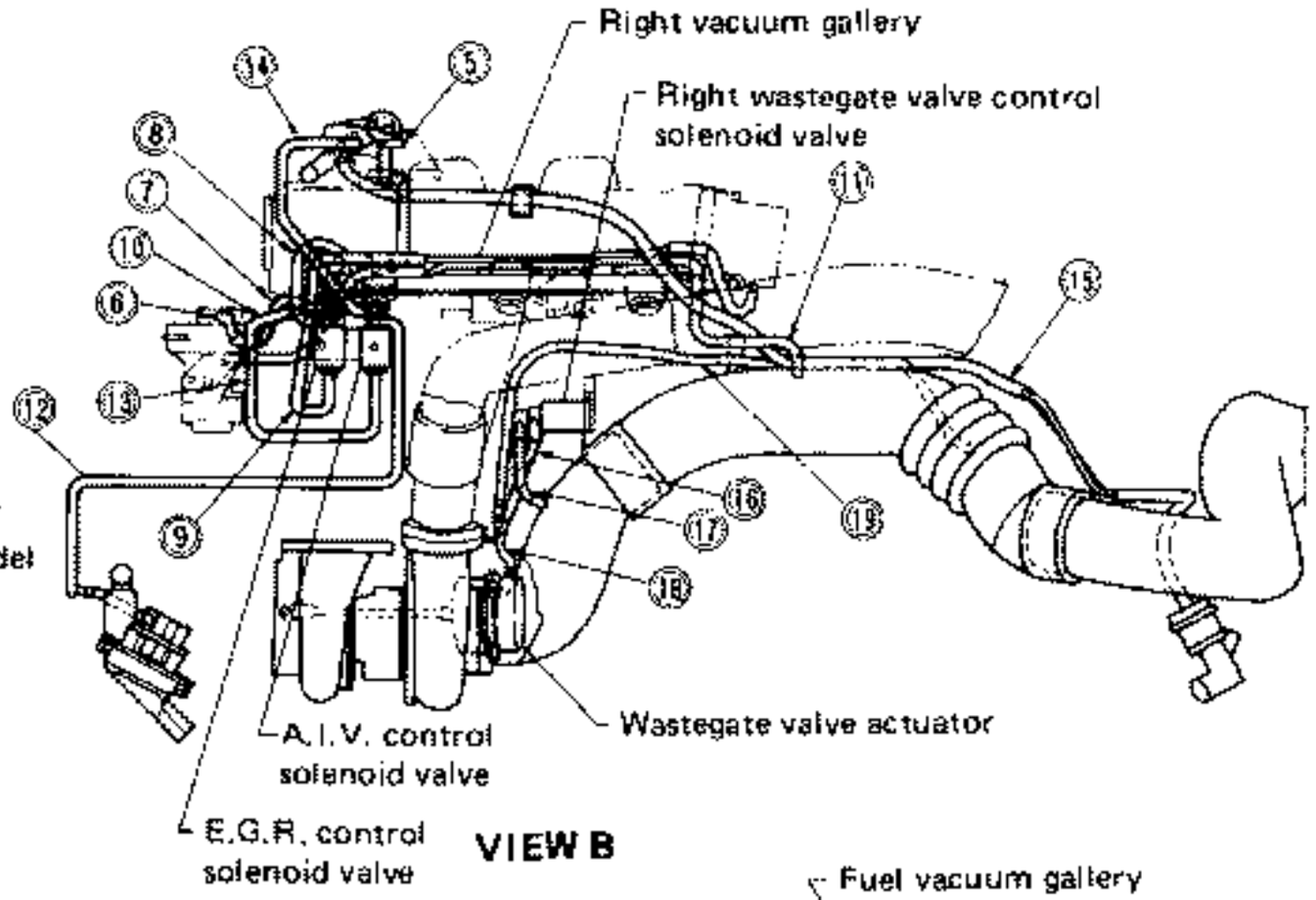

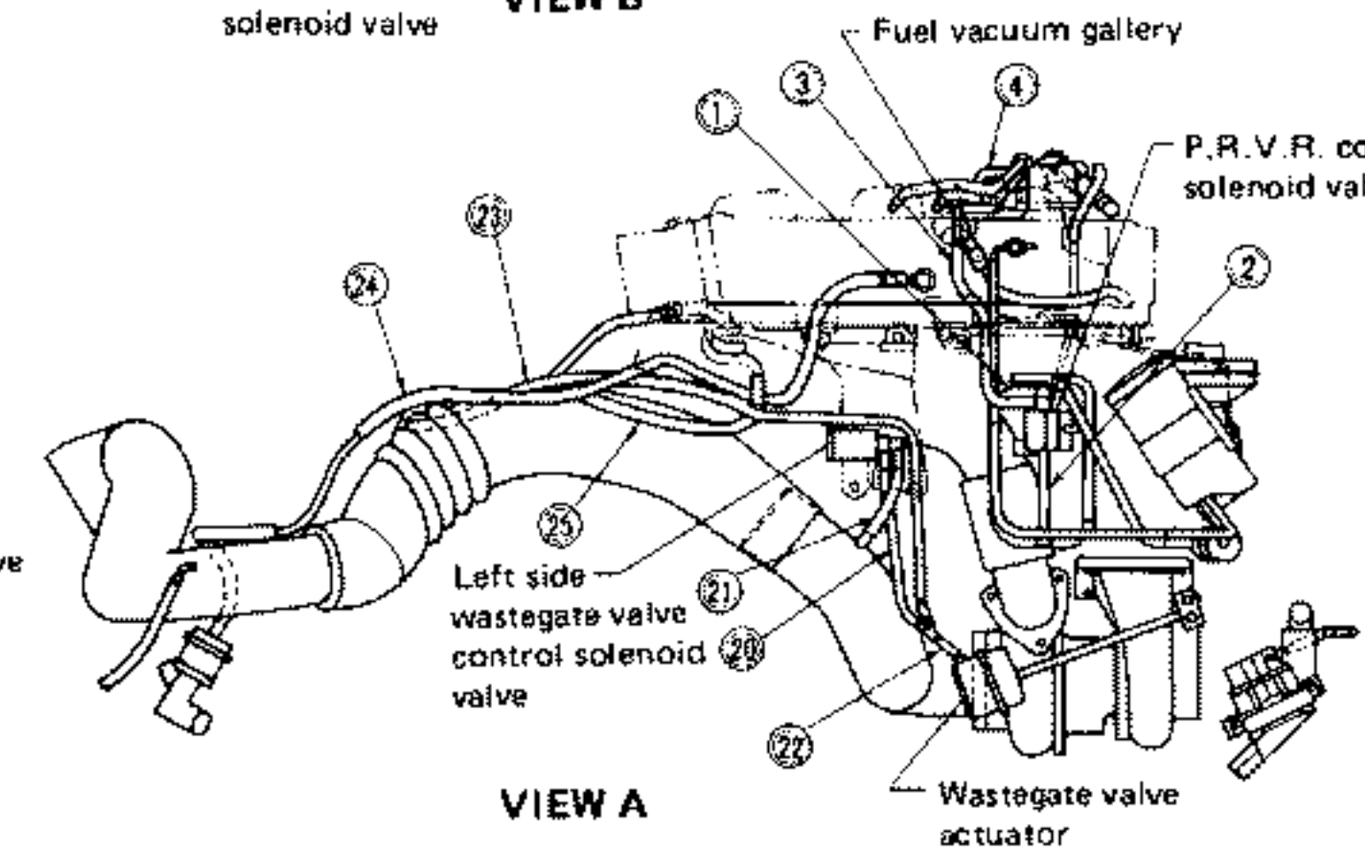

① P.R.V.R. control solenoid valve to Vacuum tank
② P.R.V.R. control solenoid valve to Intake manifold collector
③ P.R.V.R. control solenoid valve to Fuel vacuum gallery
④ Fuel pressure regulator to Fuel vacuum gallery
⑤ Fuel damper to Balance tube
⑥ E.G.R. control solenoid valve to Rear side vacuum gallery
⑦ Rear side vacuum gallery to Right side vacuum gallery
⑧ E.G.R. control solenoid valve to Right side vacuum gallery
⑨ Throttle chamber to E.G.R. control solenoid valve
⑩ E.G.R. control solenoid valve to Right side air gallery through 3-way connector
⑪ Air duct to Right side air gallery
⑫ A.I.V. control solenoid valve to A.I.V. control valve
⑬ A.I.V. control solenoid valve to Right side air gallery through 3-way connector
⑭ A.I.V. control solenoid valve to Balance tube
⑮ Right side recirculation valve to Intake manifold collector
⑯ Right side wastegate valve control solenoid valve to Air pipe through 3-way connector
⑰ Right side wastegate valve control solenoid valve to Suction pipe
⑱ Right side wastegate valve actuator to Air pipe through 3-way connector
⑲ Air pipe to 3-way connector (For right side wastegate valve control)
⑳ Left side wastegate valve control solenoid valve to Air pipe through 3-way connector
㉑ Left side wastegate valve control solenoid valve to Suction pipe
㉒ Left side wastegate valve actuator to Air pipe through 3-way connector
㉓ Air pipe to 3-way connector (For left side wastegate valve control)
㉔ Left side recirculation valve to Intake manifold collector
㉕ Canister purge line

SEF196I

Circuit Diagram

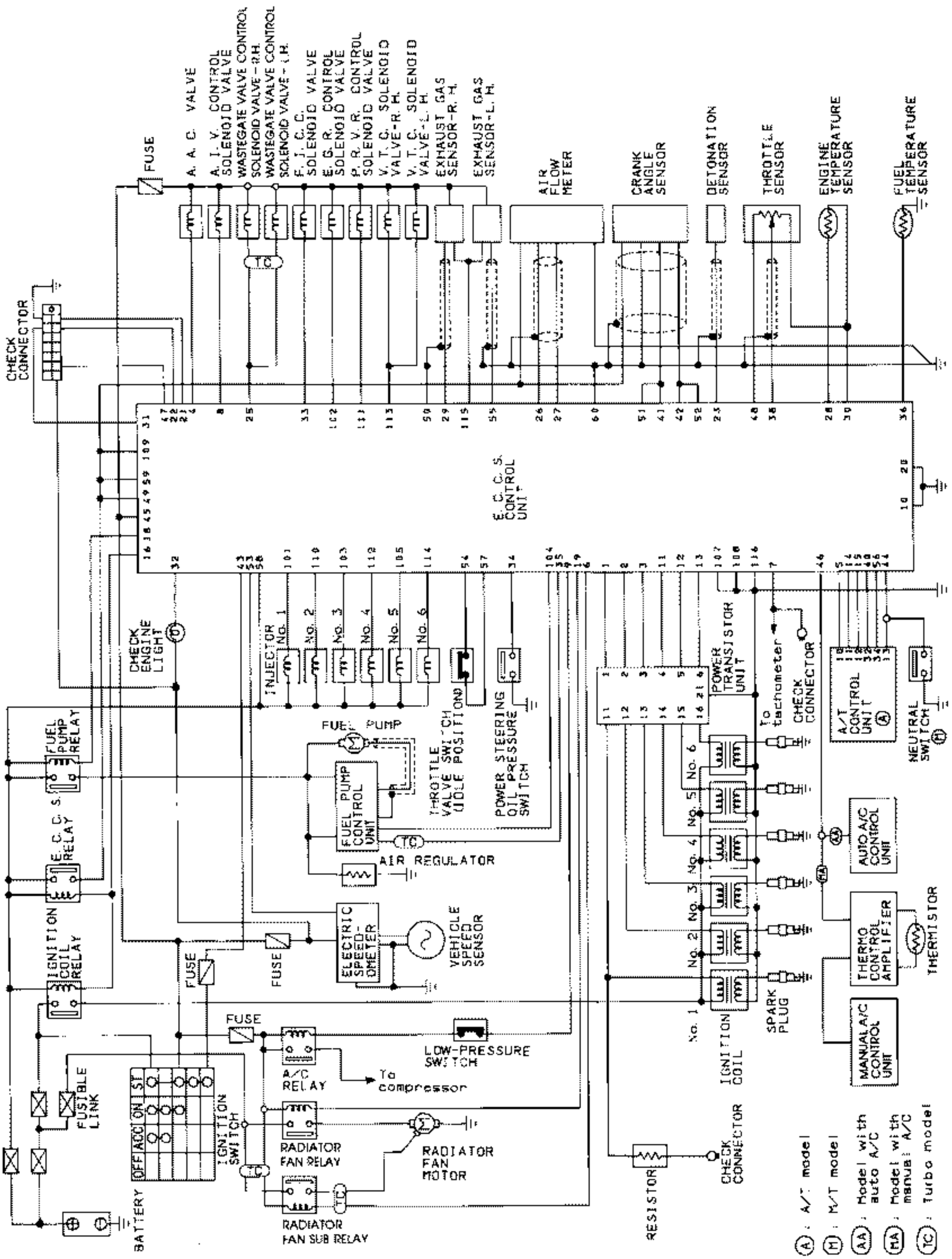

SEF352K

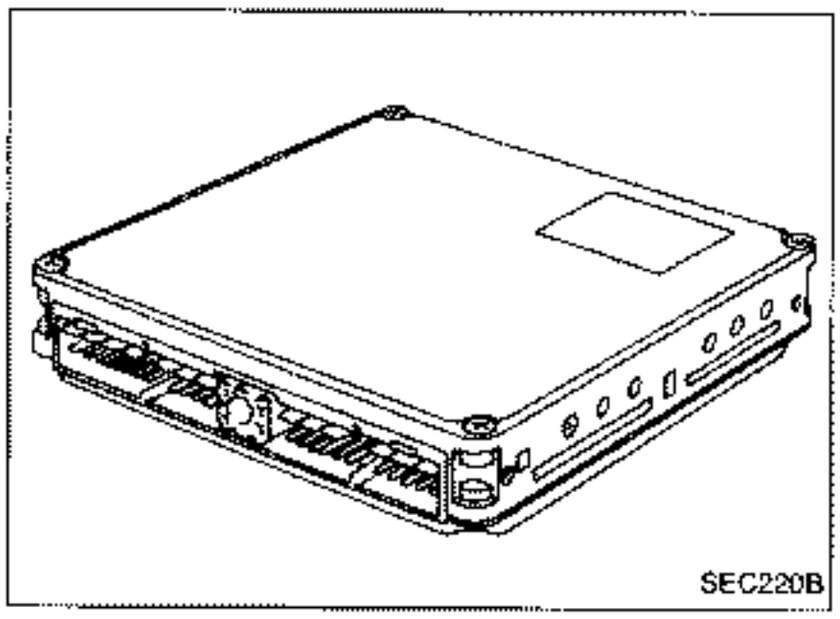
SEC220B

E.C.C.S. Control Unit (E.C.U.)

The E.C.U. consists of a microcomputer, an inspection lamp, a diagnostic mode selector, and connectors for signal input and output and for power supply. The unit controls the engine.

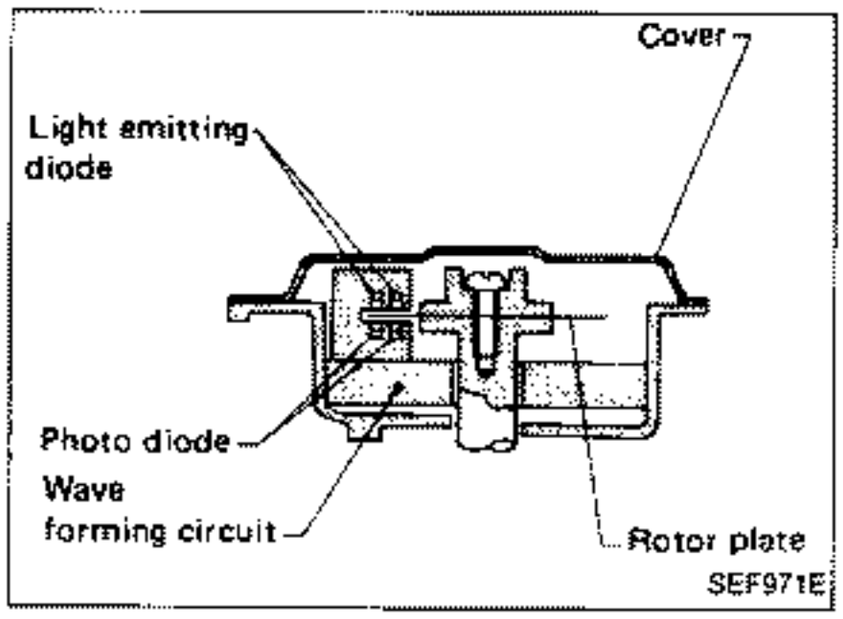

SEF971E

Crank Angle Sensor

The crank angle sensor is a basic component of the E.C.C.S. It monitors engine speed and piston position, and sends signals to the E.C.U. to control fuel injection, ignition timing and other functions.
The crank angle sensor has a rotor plate and a wave-forming circuit. The rotor plate has 360 slits for 1° signal and 6 slits for 120° signal. Light Emitting Diodes (L.E.D.) and photo diodes are built in the wave-forming circuit.

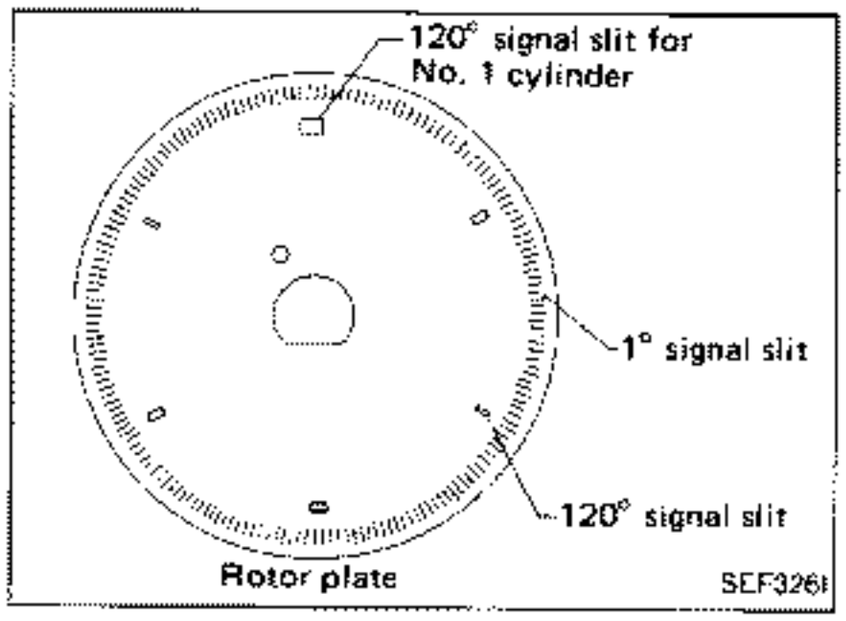

SEF326I

When the rotor plate passes between the L.E.D. and the photo diode, the slits in the rotor plate continually cut the light being transmitted to the photo diode from the L.E.D. This generates rough-shaped pulses which are converted into on-off pulses by the wave-forming circuit, which are sent to the E.C.U.

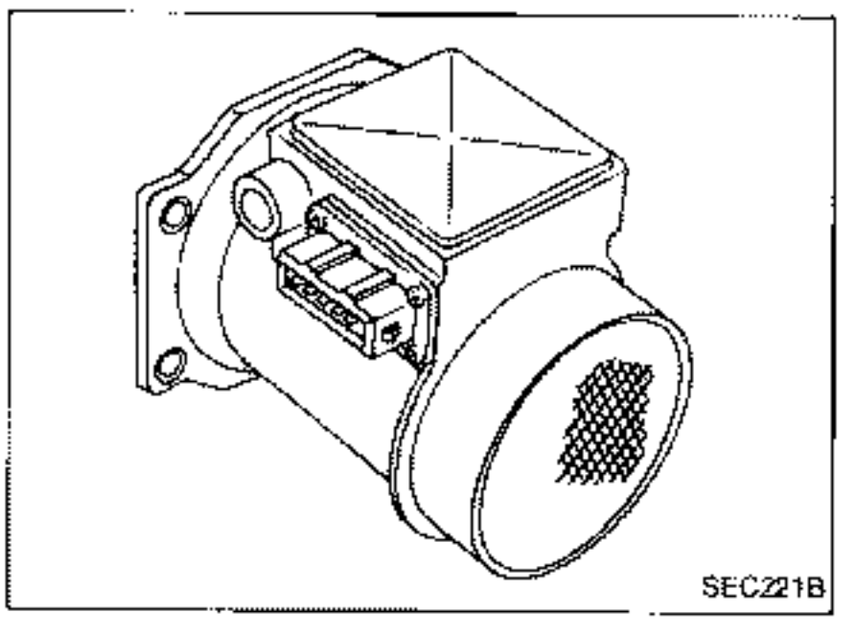
SEC221B

Air Flow Meter

The air flow meter measures the intake air flow rate by measuring a part of the entire flow. Measurements are made in such a way that the E.C.U. receives electrical output signals varied by the amount of heat emitting from the hot film placed in the stream of the intake air.
When intake air flows into the intake manifold through a route around the hot film, the heat generated from the hot film is taken away by the air. The amount of heat reduction depends on the air flow. The temperature of the hot film is automatically controlled to a certain number of degrees.
Therefore, it is necessary to supply the hot film with more electric current in order to maintain the temperature of the hot film. The E.C.U. detects the air flow by means of this current change.

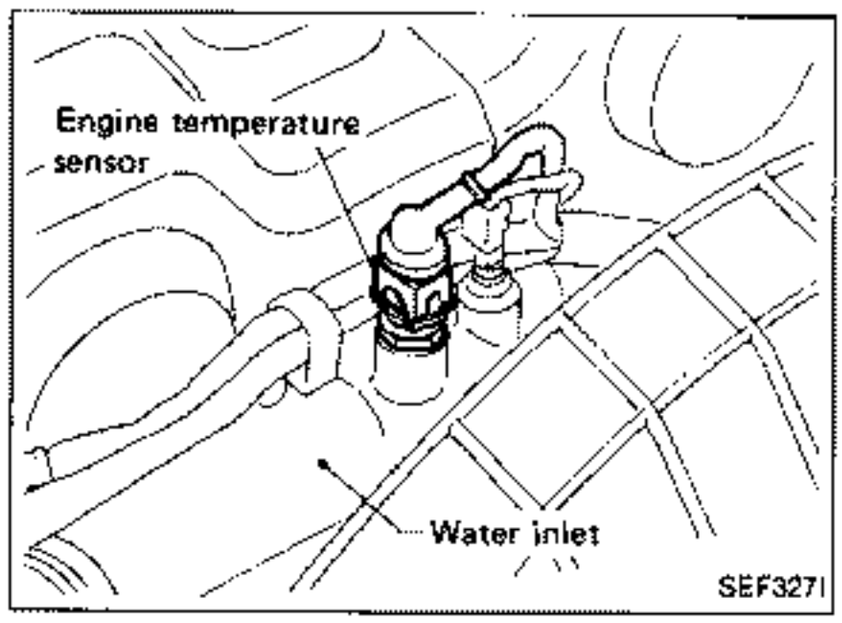

Engine Temperature Sensor

The engine temperature sensor, located on the top of water inlet housing, detects engine coolant temperature and transmits a signal to the E.C.U.
The temperature sensing unit employs a thermistor which is sensitive to the change in temperature. Electrical resistance of the thermistor decreases in response to the temperature rise.

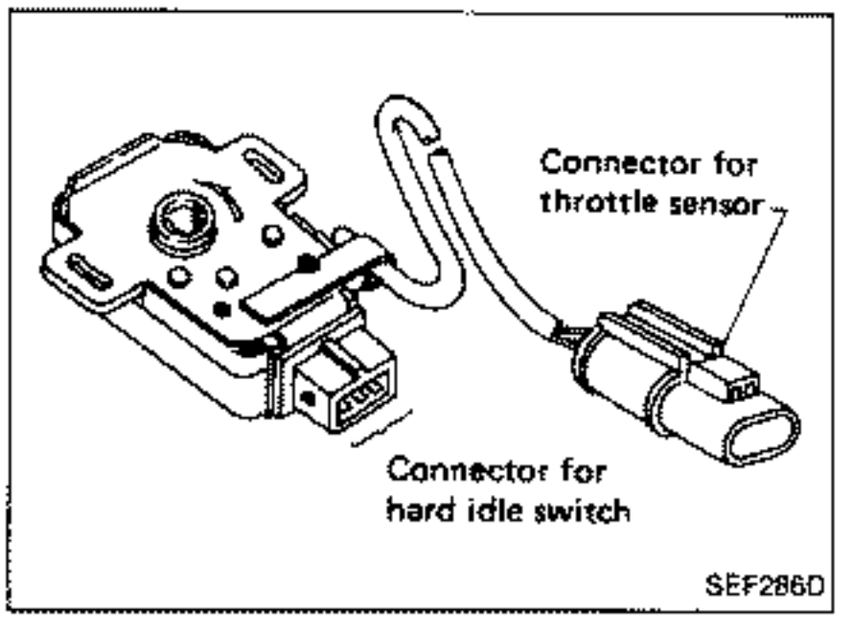

Throttle Sensor & Soft/Hard Idle Switch

The throttle sensor responds to accelerator pedal movement. This sensor is a kind of potentiometer which transforms the throttle valve position into output voltage, and emits the voltage signal to the E.C.U. In addition, the sensor detects the opening and closing speed of the throttle valve and feeds the voltage signal to the E.C.U.
Idle position of the throttle valve is determined by the E.C.U. receiving the signal from the throttle sensor. This system is called "soft idle switch". It controls engine operation such as fuel cut. On the other hand, "hard idle switch", which is built in the throttle sensor unit, is used for engine control when soft idle switch is malfunctioning.

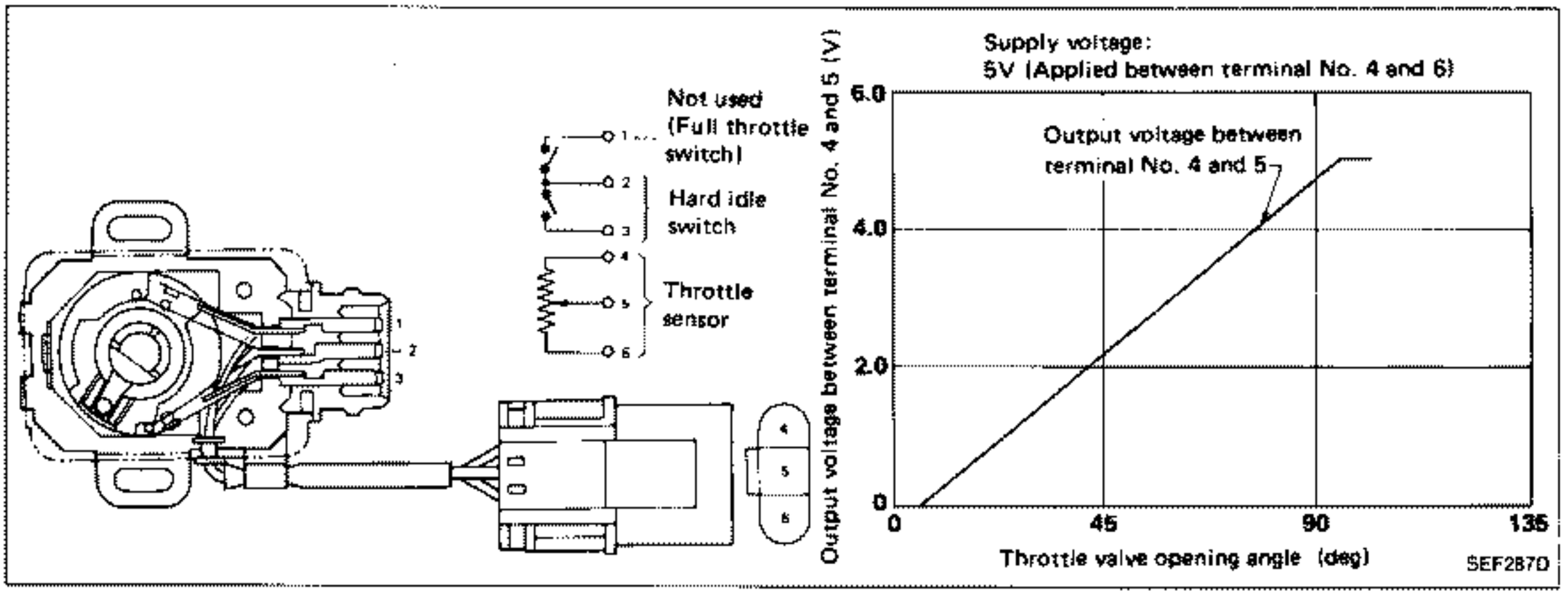

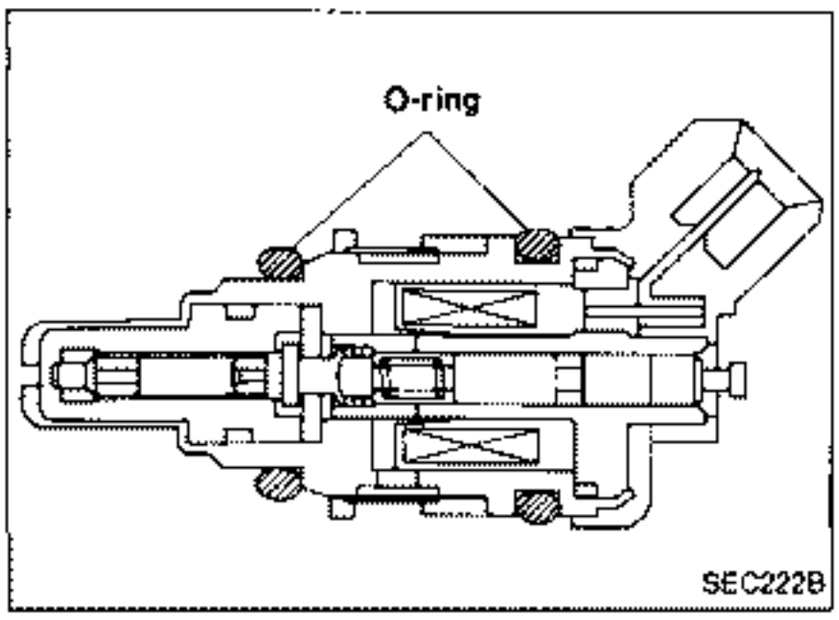

Fuel Injector

The fuel injector is a small, elaborate solenoid valve. As the E.C.U. sends injection signals to the injector, the coil in the injector pulls the needle valve back and fuel is released into the intake manifold through the nozzle. The injected fuel is controlled by the E.C.U. in terms of injection pulse duration.

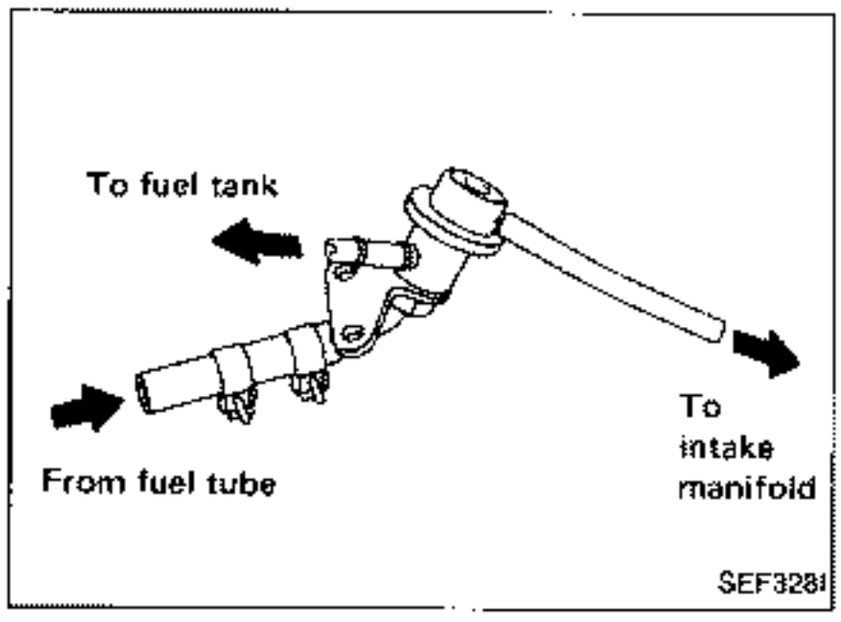

Pressure Regulator

The pressure regulator maintains the fuel pressure at 299.1 kPa (2.991 bar, 3.05 kg/cm^2, 43.4 psi). Since the injected fuel amount depends on injection pulse duration, it is necessary to maintain the pressure at the above value.

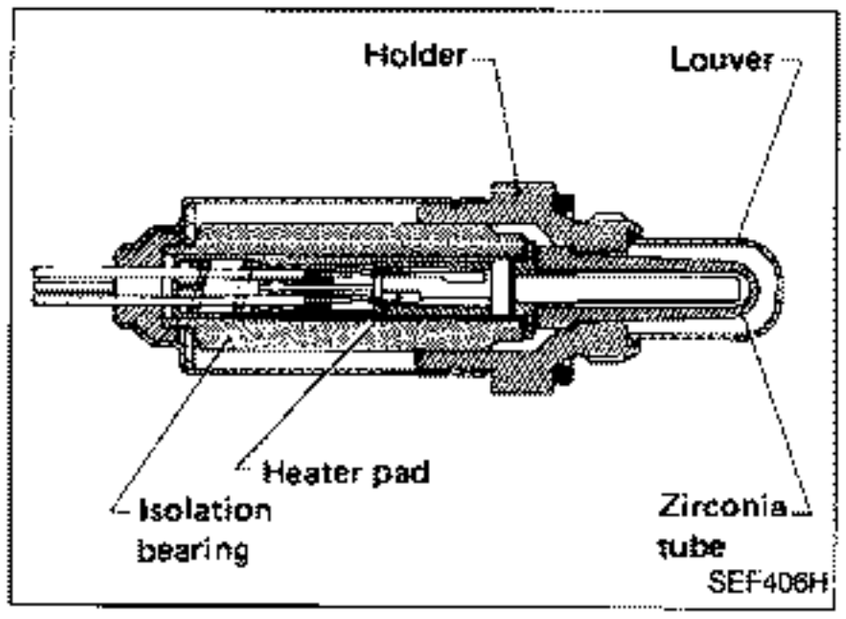

Exhaust Gas Sensor

The exhaust gas sensor, which is placed into the exhaust outlet, monitors the amount of oxygen in the exhaust gas.
The sensor has a closed-end tube made of ceramic zirconia. The outer surface of the tube is exposed to exhaust gas, and the inner surface to atmosphere. The zirconia of the tube compares the oxygen density of exhaust gas with that of atmosphere, and generates electricity. In order to improve generating power of the zirconia, its tube is coated with platinum. The voltage is approximately 1V in a richer condition of the mixture ratio than the ideal air-fuel ratio, while approximately 0V in leaner conditions. The radical change from 1V to 0V occurs at around the ideal mixture ratio. In this way, the exhaust gas sensor detects the amount of oxygen in the exhaust gas and sends the signal of approximately 1V or 0V to the E.C.U. A heater is used to activate the sensor.

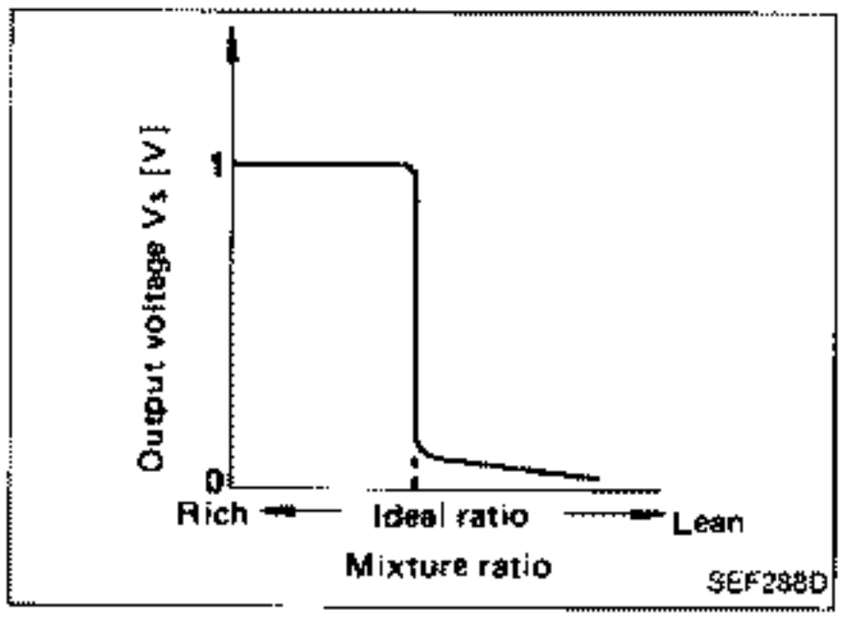

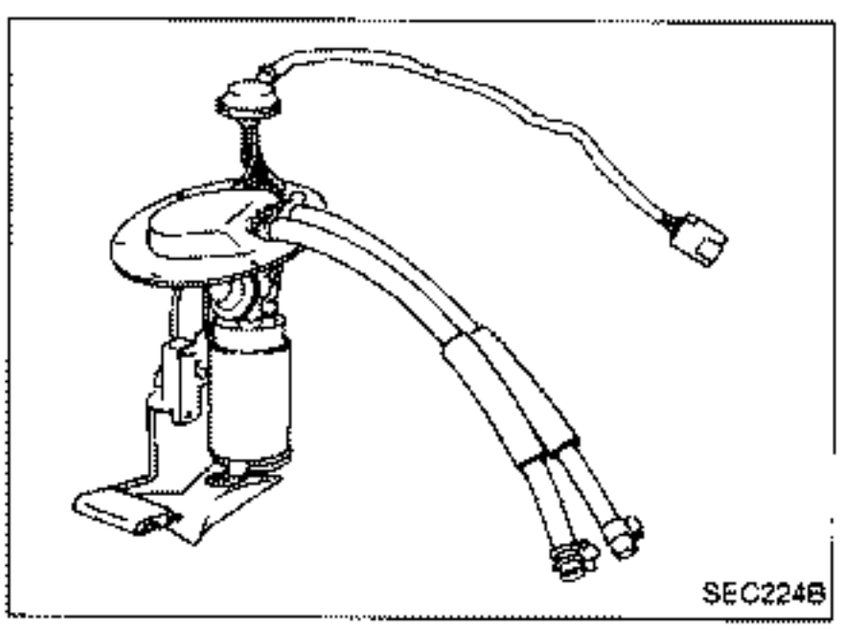

Fuel Pump

The fuel pump is an in-tank type with a fuel damper. Both the pump and damper are located in the fuel tank.

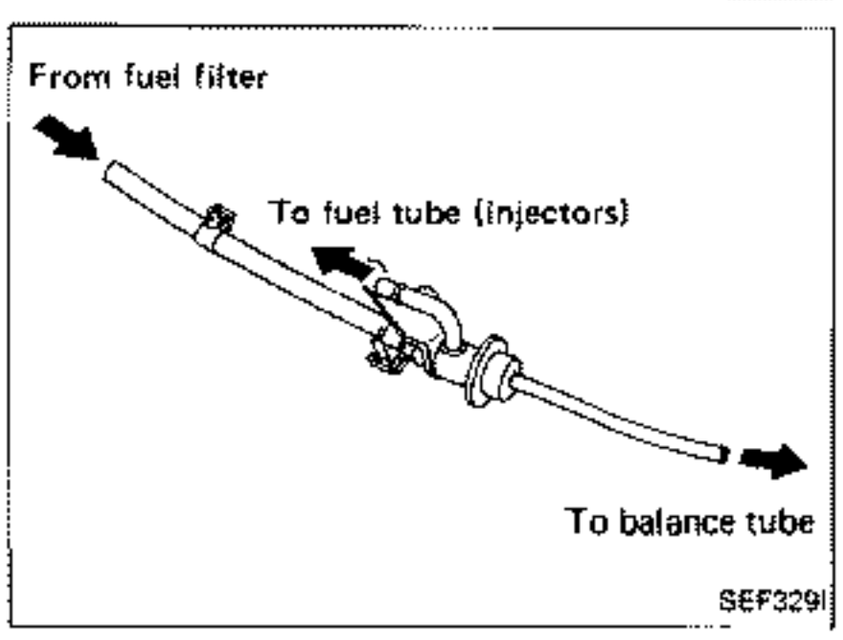

Fuel Damper

The fuel damper, which consists of a diagram, reduces fuel pressure pulsation in the fuel feed line between the fuel filter and injectors.

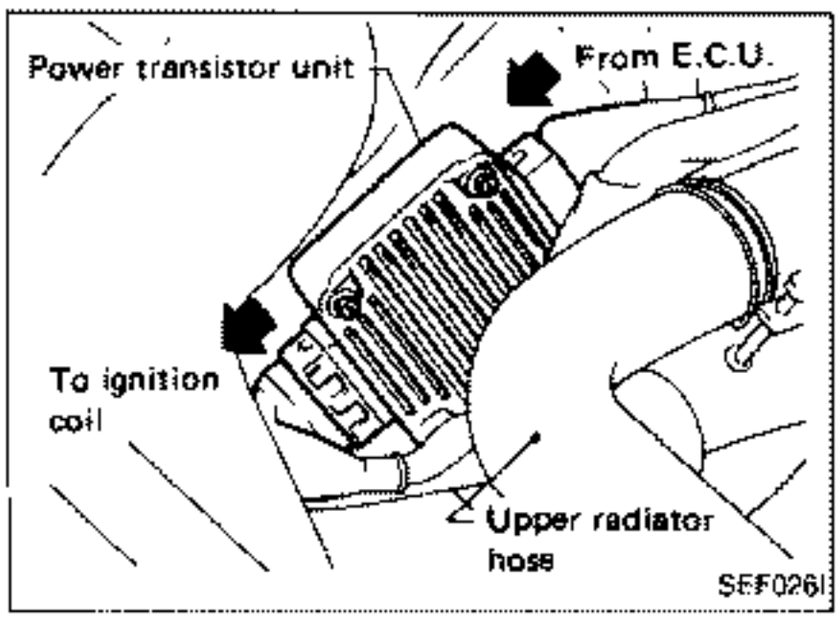

Power Transistor Unit & Ignition Coil

The ignition signal from the E.C.U. is amplified by the power transistor, which turns the ignition coil primary circuit on and off, inducing the proper high voltage in the secondary circuit. The ignition coil is a small, molded type.

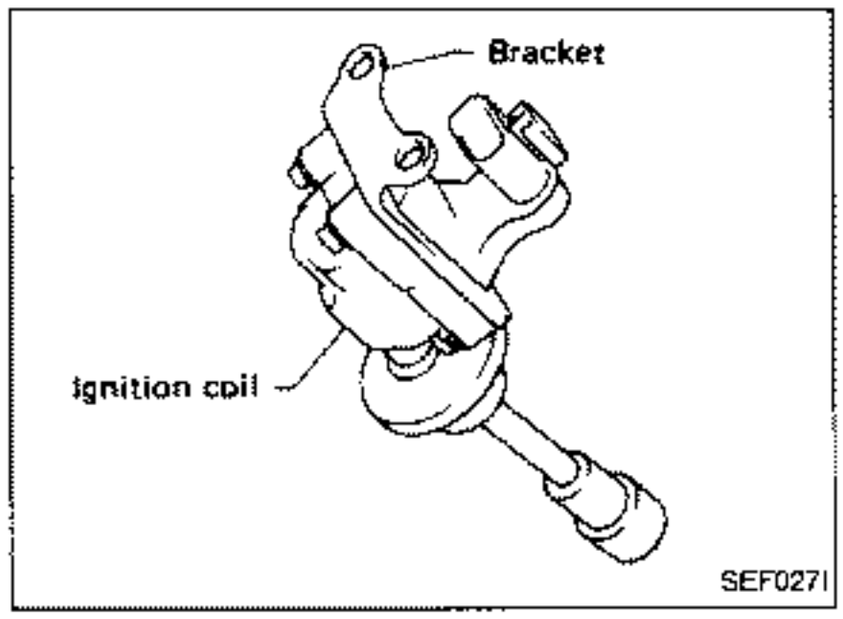

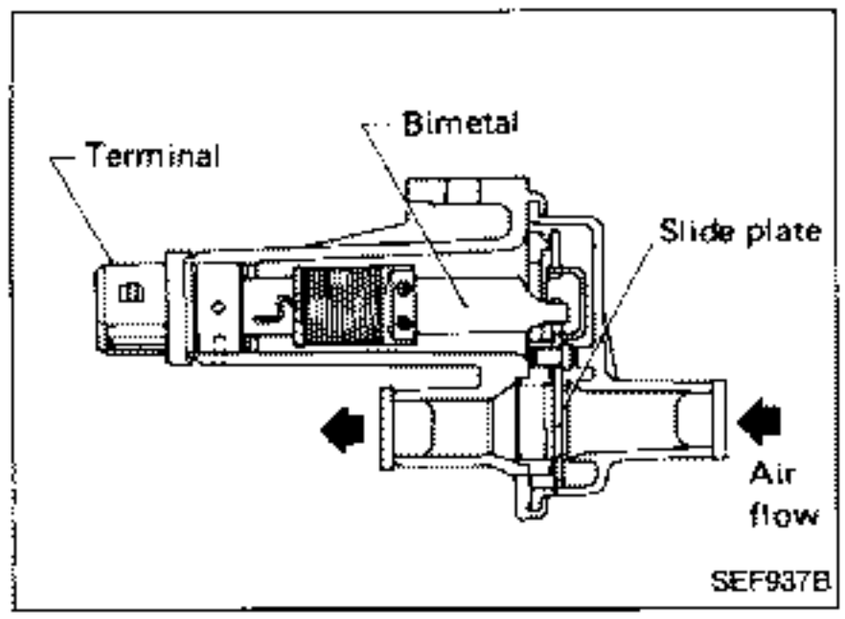

Air Regulator

The air regulator provides an air by-pass when the engine is cold for a fast idle during warm-up.
A bimetal, heater and rotary shutter are built into the air regulator. When the bimetal temperature is low, the air by-pass port opens. As the engine starts and electric current flows through a heater, the bimetal begins to turn the shutter to close the by-pass port. The air passage remains closed until the engine stops and the bimetal temperature drops.

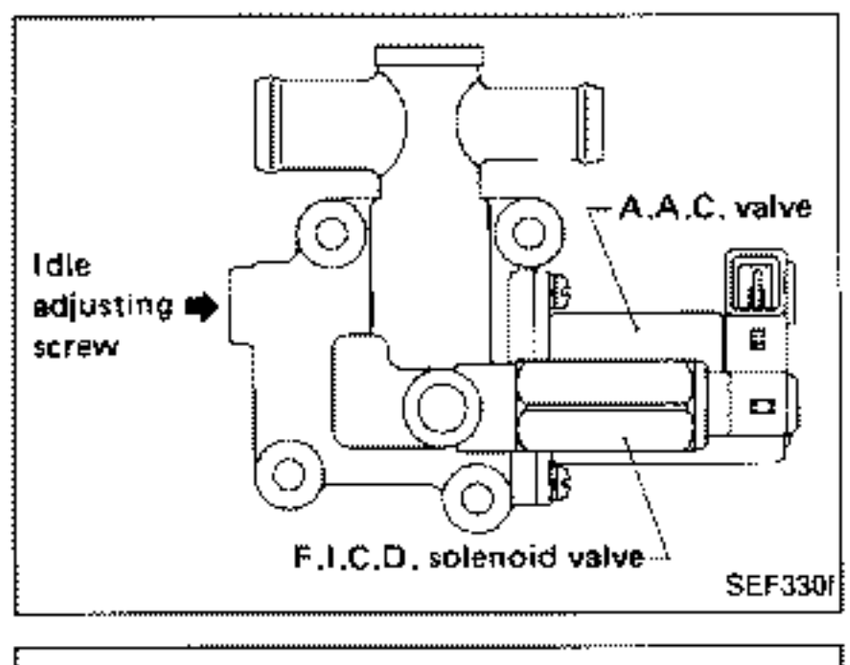

Idle Air Adjusting (I.A.A.) Unit

The I.A.A. unit is made up of the A.A.C. valve, F.I.C.D. solenoid valve and idle adjust screw. It receives the signal from the E.C.U. and controls the idle speed at the preset value.
The F.I.C.D. solenoid valve compensates for changes in idle speed caused by the operation of the air compressor.

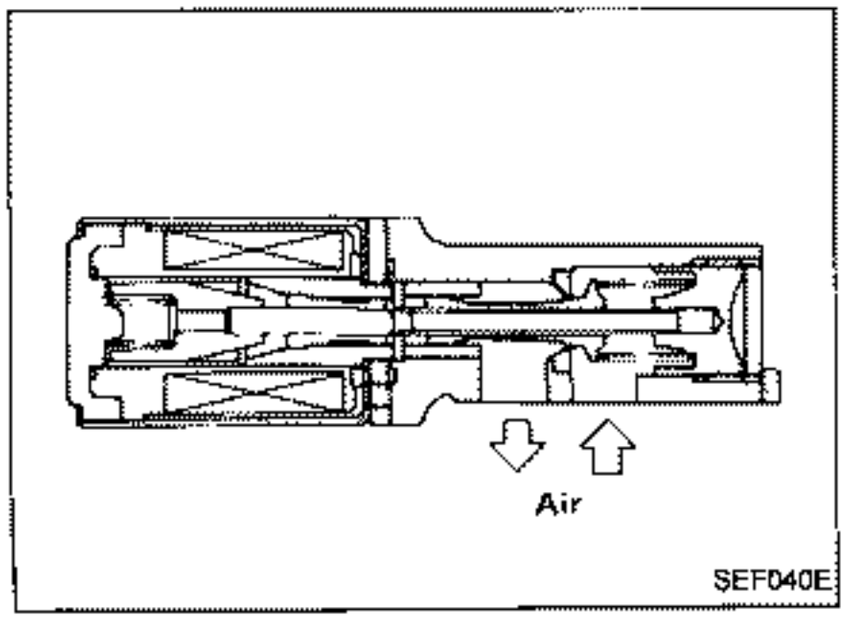

Auxiliary Air Control (A.A.C.) Valve

The E.C.U. actuates the A.A.C. valve by an ON/OFF pulse. The longer that ON duty is left on, the larger the amount of air that will flow through the A.A.C. valve.

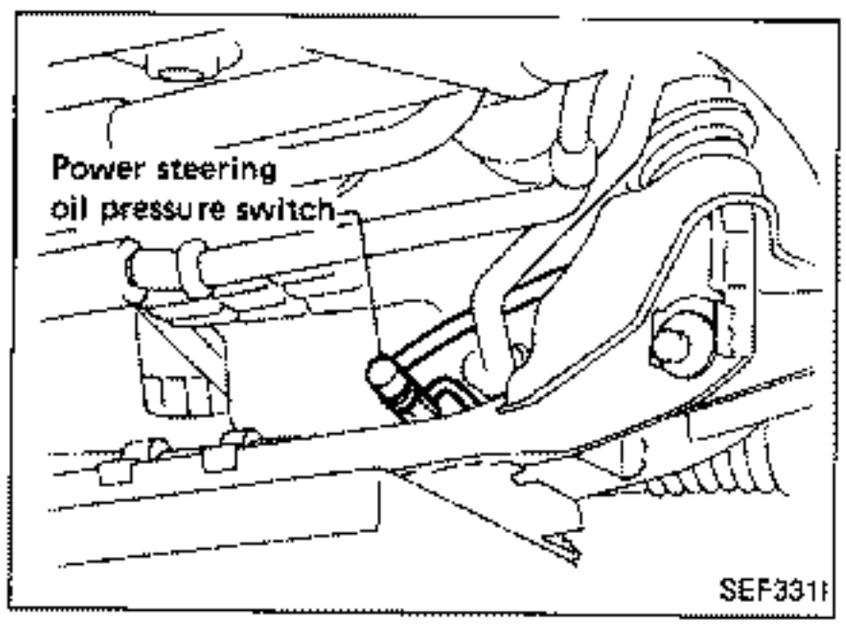

Power Steering Oil Pressure Switch

The power steering oil pressure switch is attached to the power steering high-pressure tube and detects the power steering load, sending the load signal to the E.C.U. The E.C.U. then sends the idle-up signal to the A.A.C. valve.

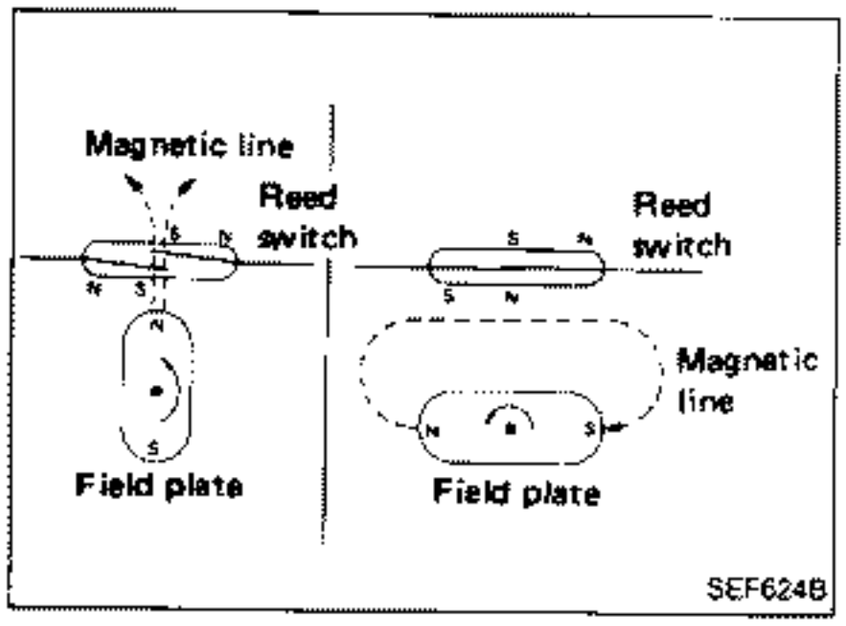

Vehicle Speed Sensor

The vehicle speed sensor provides a vehicle speed signal to the E.C.U.
The speed sensor consists of a reed switch, which is installed in the speedometer unit and transforms vehicle speed into a pulse signal.

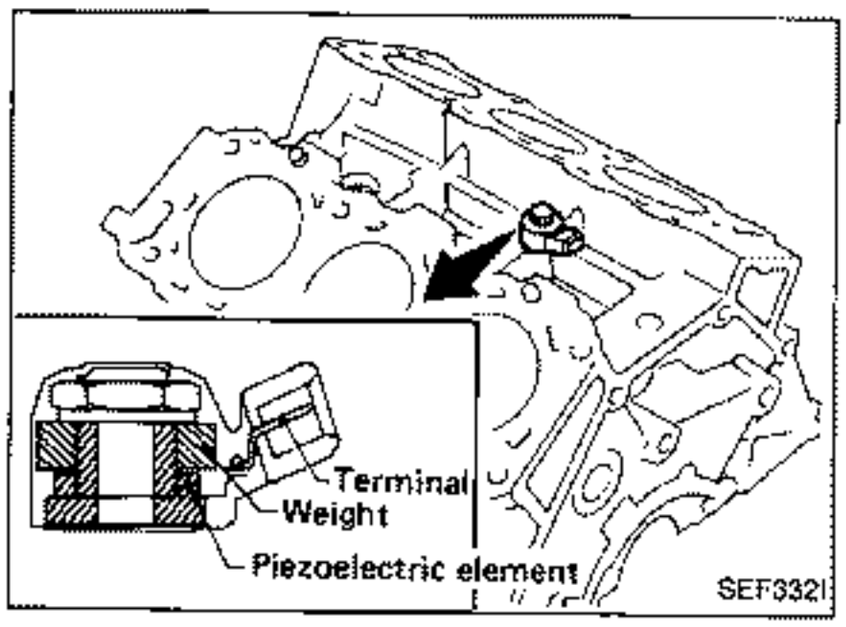

Detonation Sensor

The detonation sensor is attached to the cylinder block and senses engine knocking conditions.
A knocking vibration from the cylinder block is applied as pressure to the piezoelectric element. This vibrational pressure is then converted into a voltage signal which is sent to the E.C.U.

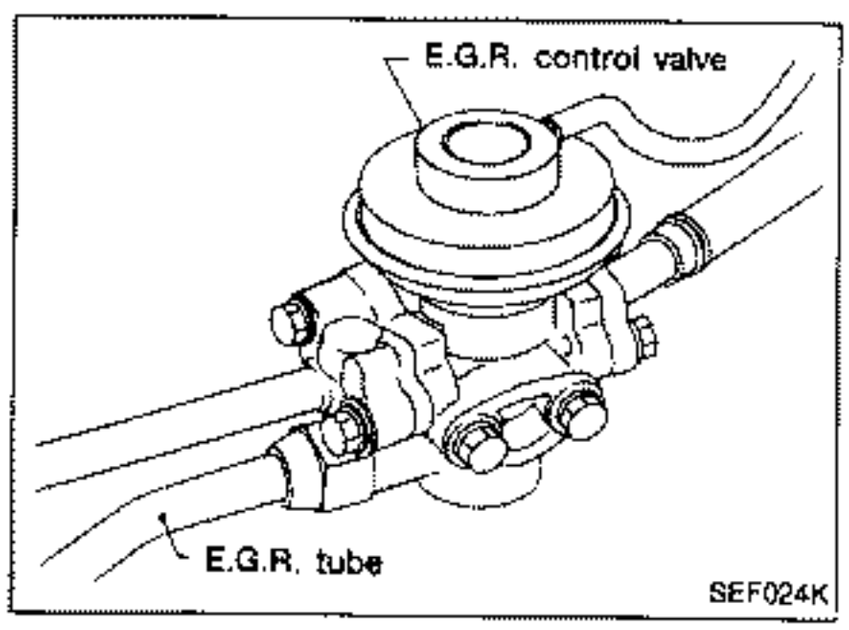

E.G.R. Control Valve

The E.G.R. control valve controls the quantity of exhaust gas to be diverted to the intake manifold through vertical movement of a taper valve connected to the diaphragm. Vacuum is applied to the diaphragm in response to the opening of the throttle valve.

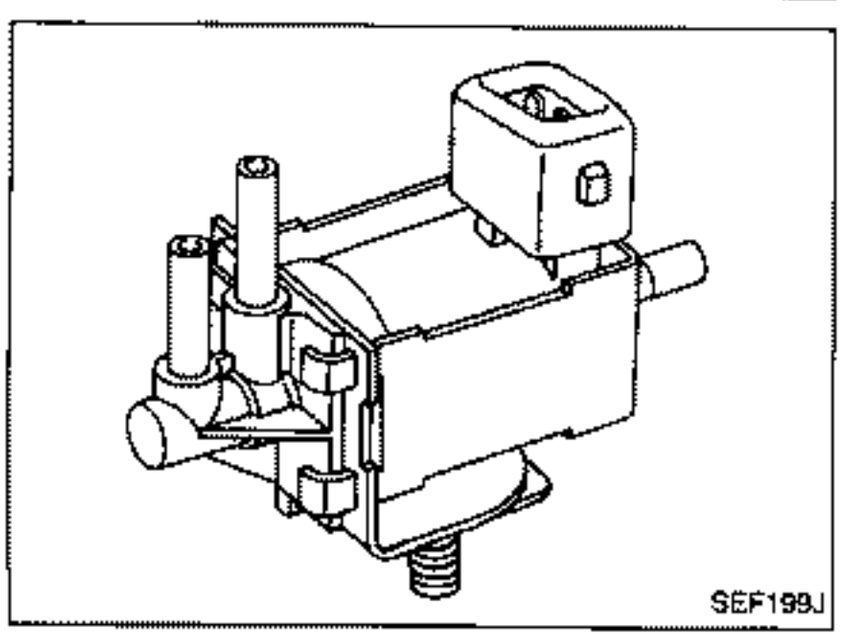

E.G.R. Control Solenoid Valve

The solenoid valve responds to the ON/OFF signal from the E.C.U. When it is off, a vacuum signal from the throttle chamber is fed into the E.G.R. control valve. When the control unit sends an ON signal, the coil pulls the plunger downward and cuts the vacuum signal.

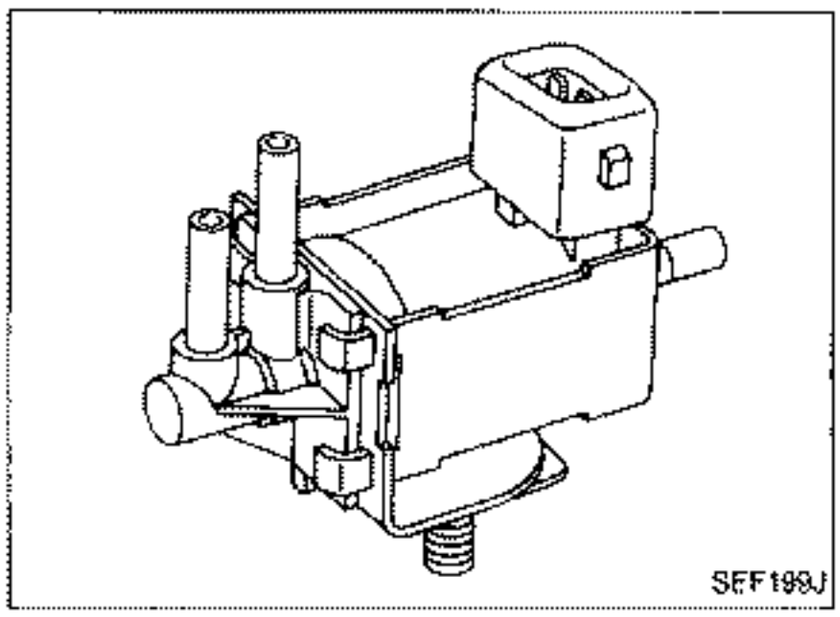

Pressure Regulator Vacuum Relief (P.R.V.R.) Control Solenoid Valve

The solenoid valve responds to the ON/OFF signal from the E.C.U. When it is off, a vacuum signal from the intake manifold is fed into the pressure regulator. When the control unit sends an ON signal, the coil pulls the plunger downward and cuts the vacuum signal.

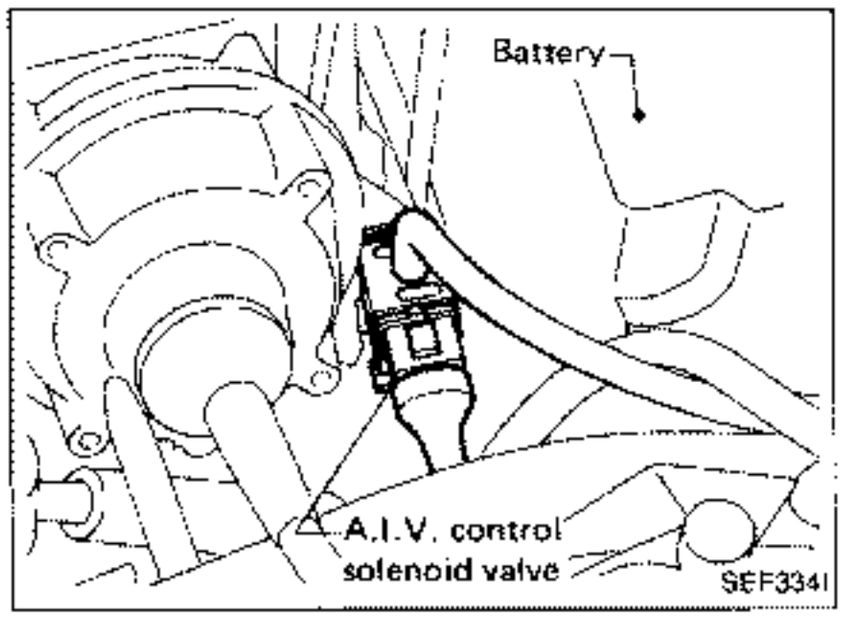

A.I.V. Control Solenoid Valve

The solenoid valve responds to the ON/OFF signal from the E.C.U. When it is ON, a vacuum signal from the intake manifold is fed into the A.I.V. control valve. When the control unit sends an OFF signal, the coil pulls the plunger downward and cuts the vacuum signal.

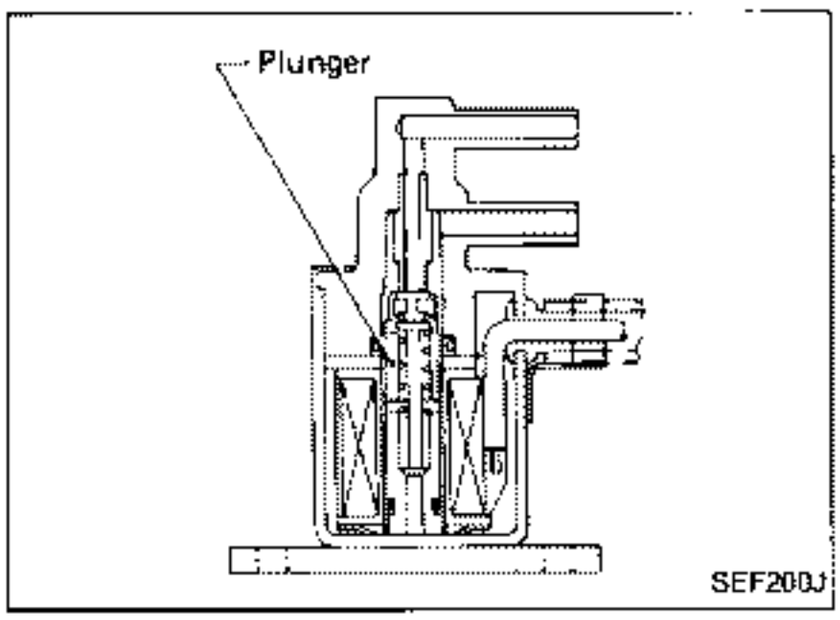

Wastegate Valve Control Solenoid Valve

The solenoid valve responds to the ON/OFF signal from the E.C.U. When it is ON, a vacuum signal from the suction pipe or compressor outlet is fed into the wastegate valve actuator. The actuator is hard to open at this time. When the control unit sends an OFF signal, the coil pulls the plunger upward and cuts the route to the suction pipe.

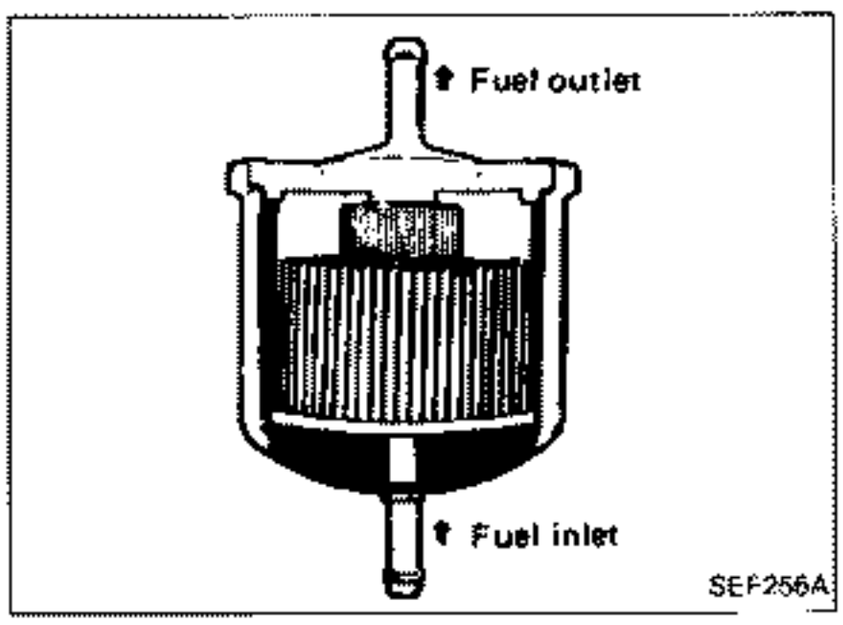

Fuel Filter

The specially designed fuel filter has a metal case in order to withstand high fuel pressure.

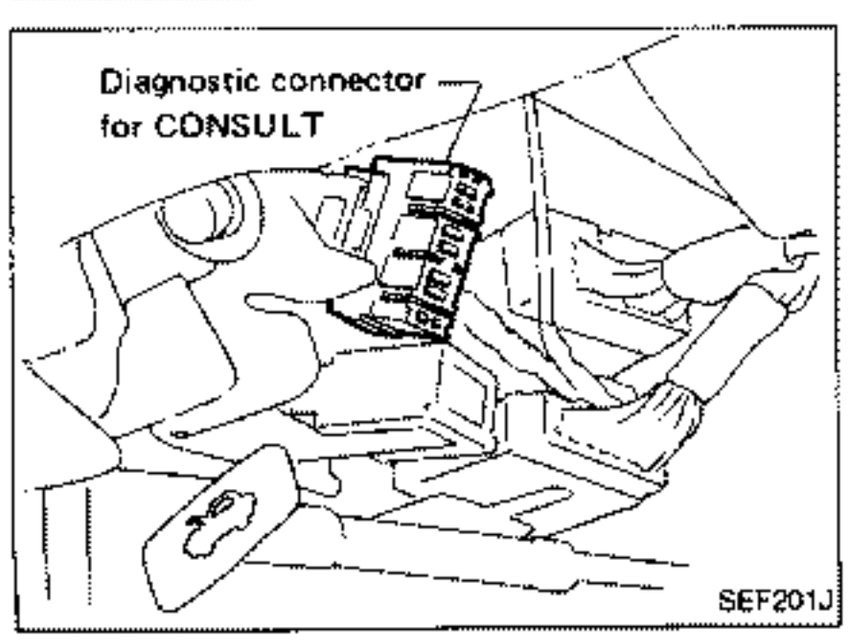

Diagnostic Connector for CONSULT

The diagnostic connector for CONSULT is located above the hood release handle.

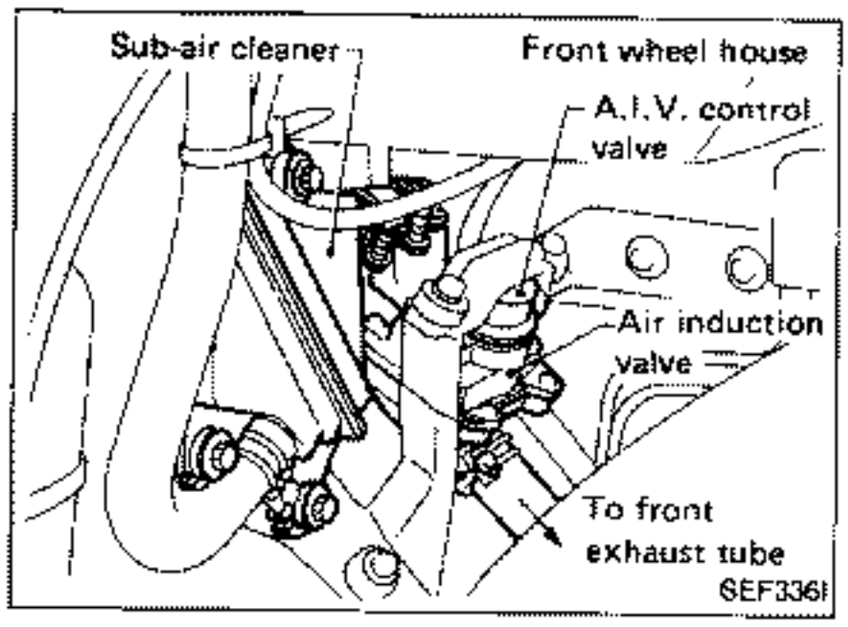

Air Induction Valve (A.I.V.)

The air induction valve sends secondary air to the exhaust manifold, using a vacuum created by exhaust pulsation in the exhaust manifold. When the exhaust pressure is below atmospheric pressure (negative pressure), secondary air is sent to the exhaust manifold. When the exhaust pressure is above atmospheric pressure, the reed valves prevent secondary air from being sent back to the sub-air cleaner.

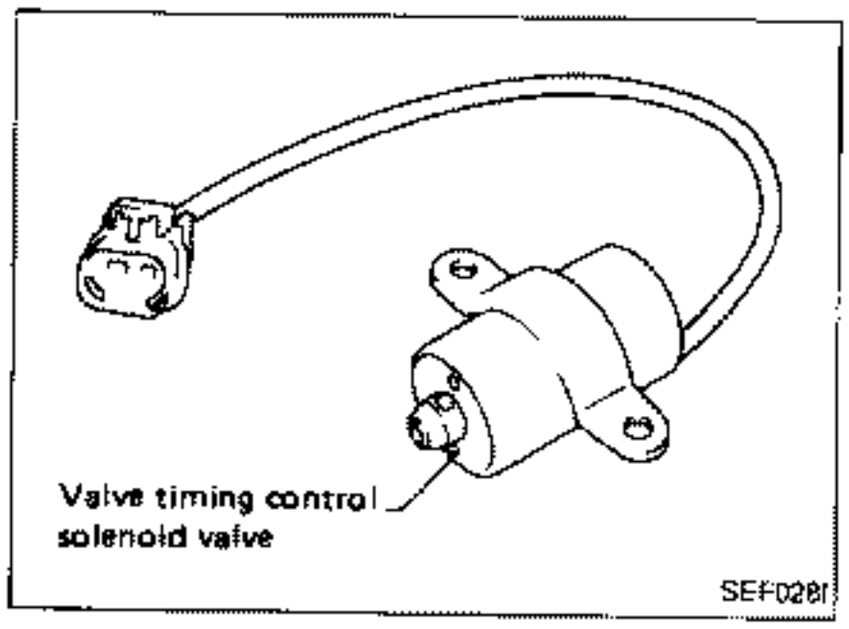

Valve Timing Control (V.T.C.) Solenoid Valve

The valve timing control solenoids are installed at the rear end of the intake camshafts, and control oil pressure which regulates the position of the intake camshafts.

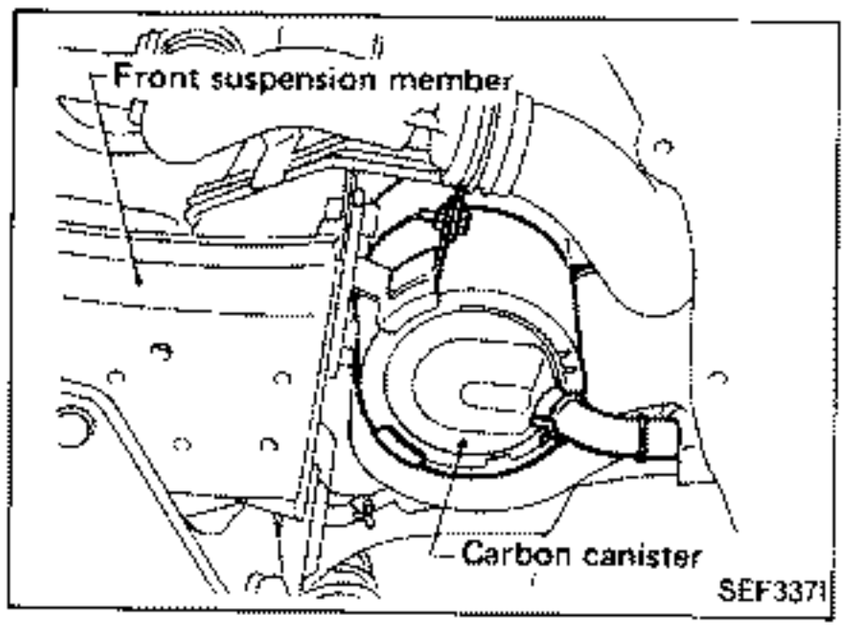

Carbon Canister

The carbon canister is filled with active charcoal to absorb evaporative gases produced in the fuel tank. These absorbed gases are then delivered to the intake manifold by manifold vacuum for combustion purposes.

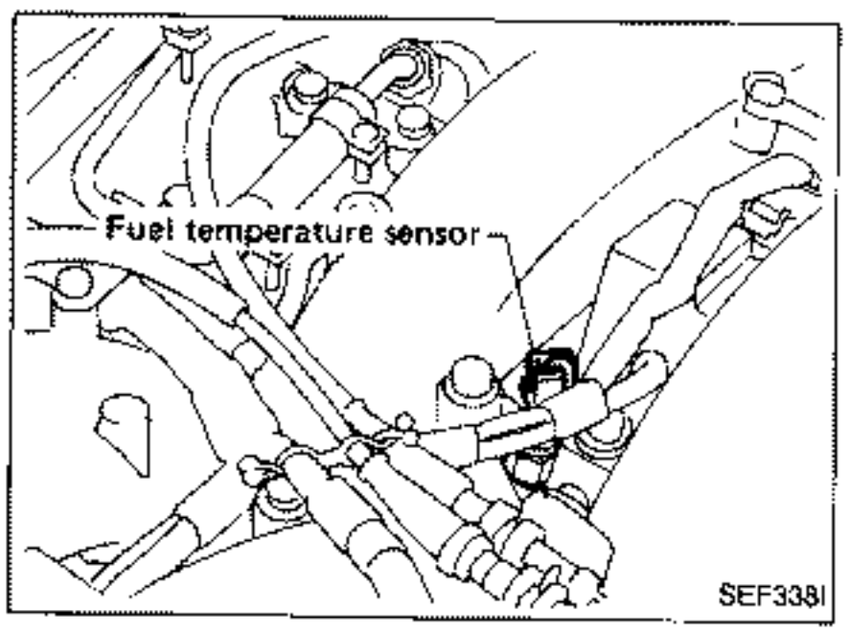

Fuel Temperature Sensor

The fuel temperature sensor, built into the fuel tube, senses fuel temperature. When the fuel temperature is higher than specified, the E.C.C.S. control unit turns the P.R.V.R. control solenoid valve ON and raises fuel pressure.

Fuel Injection Control

INPUT/OUTPUT SIGNAL LINE

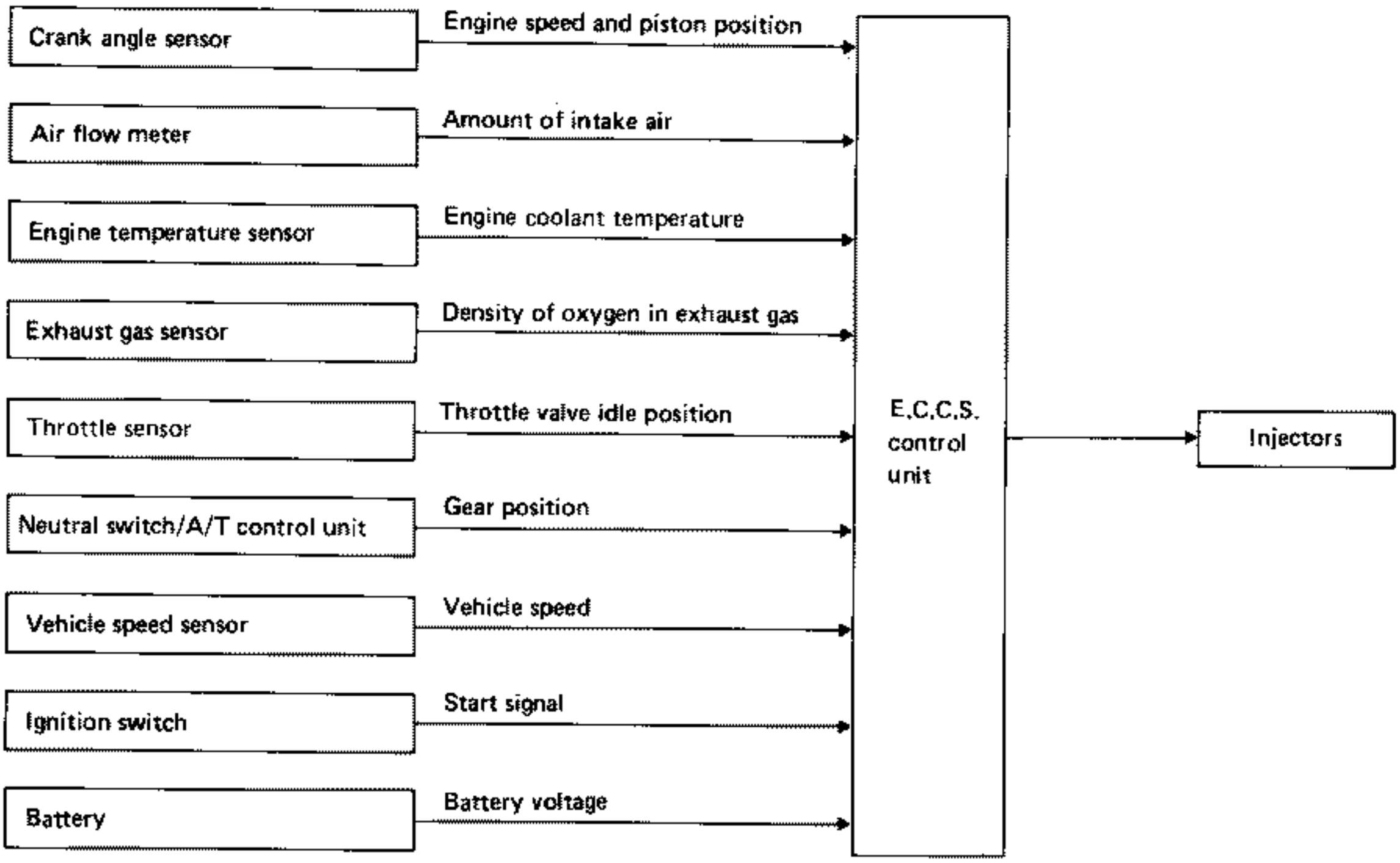

BASIC FUEL INJECTION CONTROL

The amount of fuel injected from the fuel injector, or the length of time the valve remains open, is determined by the E.C.U. The basic amount of fuel injected is a program value mapped in the E.C.U. ROM memory. In other words, the program value is preset by engine operating conditions determined by input signals (for engine rpm and air intake) from both the crank angle sensor and the air flow meter.

VARIOUS FUEL INJECTION INCREASE/DECREASE COMPENSATION

In addition, the amount of fuel injection is compensated for to improve engine performance under various operating conditions as listed below.

<Fuel increase>

1) During warm-up
2) When starting the engine
3) During acceleration
4) Hot-engine operation

<Fuel decrease>

1) During deceleration

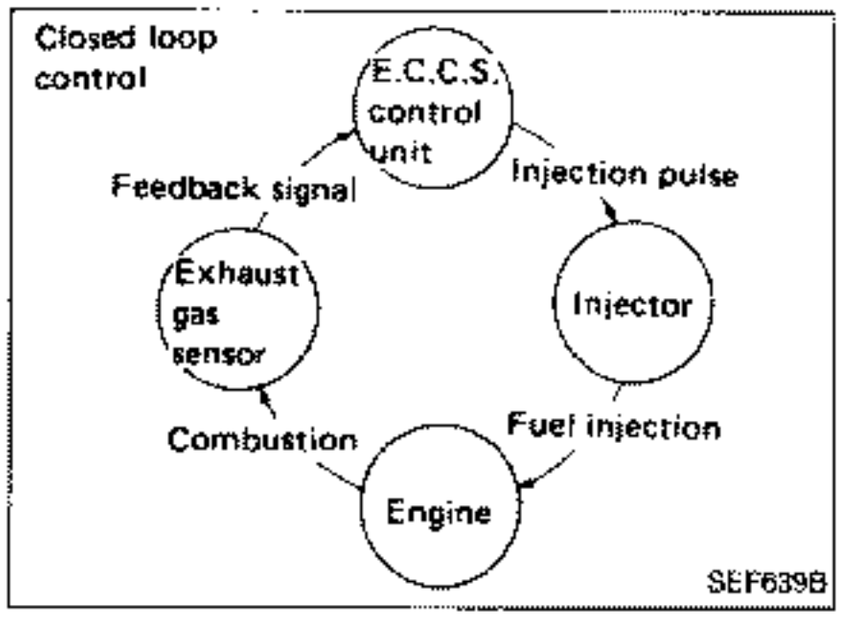

Fuel Injection Control (Cont'd)

MIXTURE RATIO FEEDBACK CONTROL

The mixture ratio feedback system is used for precise control of the mixture ratio to the stoichiometric point, so that the three-way catalyst can reduce CO, HC and NOx emissions. This system uses an exhaust gas sensor in the exhaust manifold to check the air-fuel ratio. The control unit adjusts the injection pulse width according to the sensor voltage so the mixture ratio will be within the range of the stoichiometric air-fuel ratio.
This stage refers to the closed-loop control condition. The open-loop control condition refers to that under which the E.C.U. detects any of the following conditions and feedback control stops in order to maintain stabilized fuel combustion.

1) Deceleration
2) High-load, high-speed operation
3) Engine idling
4) Malfunction of exhaust gas sensor or its circuit
5) Insufficient activation of exhaust gas sensor at low engine temperature
6) Engine starting

MIXTURE RATIO SELF-LEARNING CONTROL

The mixture ratio feedback control system monitors the mixture ratio signal transmitted from the exhaust gas sensor. This feedback signal is then sent to the E.C.U. to control the amount of fuel injection to provide a basic mixture ratio as close to the theoretical mixture ratio as possible. However, the basic mixture ratio is not necessarily controlled as originally designed. This is due to manufacturing errors (e.g., air flow meter hot wire) and changes during operation (injector clogging, etc.) of E.C.C.S. parts which directly affect the mixture ratio.
Accordingly, a difference between the basic and theoretical mixture ratios is monitored in this system. It is then computed in terms of "fuel injection duration" to automatically compensate for the difference between the two ratios.

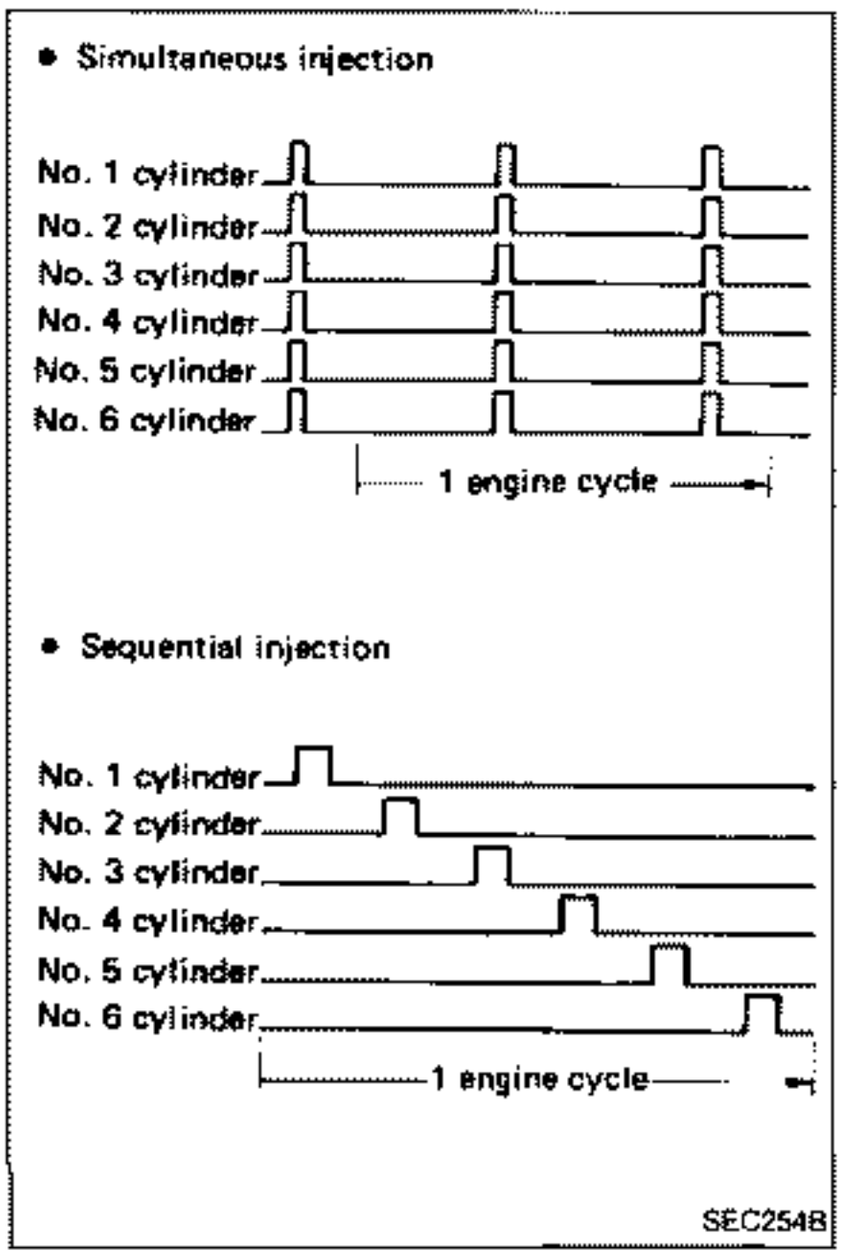

FUEL INJECTION TIMING

Two types of fuel injection systems are used — simultaneous injection and sequential injection. In the former, fuel is injected into all six cylinders simultaneously twice each engine cycle.
In other words, pulse signals of the same width are simultaneously transmitted from the E.C.U. to the six injectors two times for each engine cycle.
In the sequential injection system, fuel is injected into each cylinder during each engine cycle according to the firing order. When engine is starting, fuel is injected into all six cylinders simultaneously twice per cycle.

Fuel Injection Control (Cont'd)

FUEL SHUT-OFF

Fuel to each cylinder is cut off during deceleration or high-speed operation.

Ignition Timing Control

INPUT/OUTPUT SIGNAL LINE

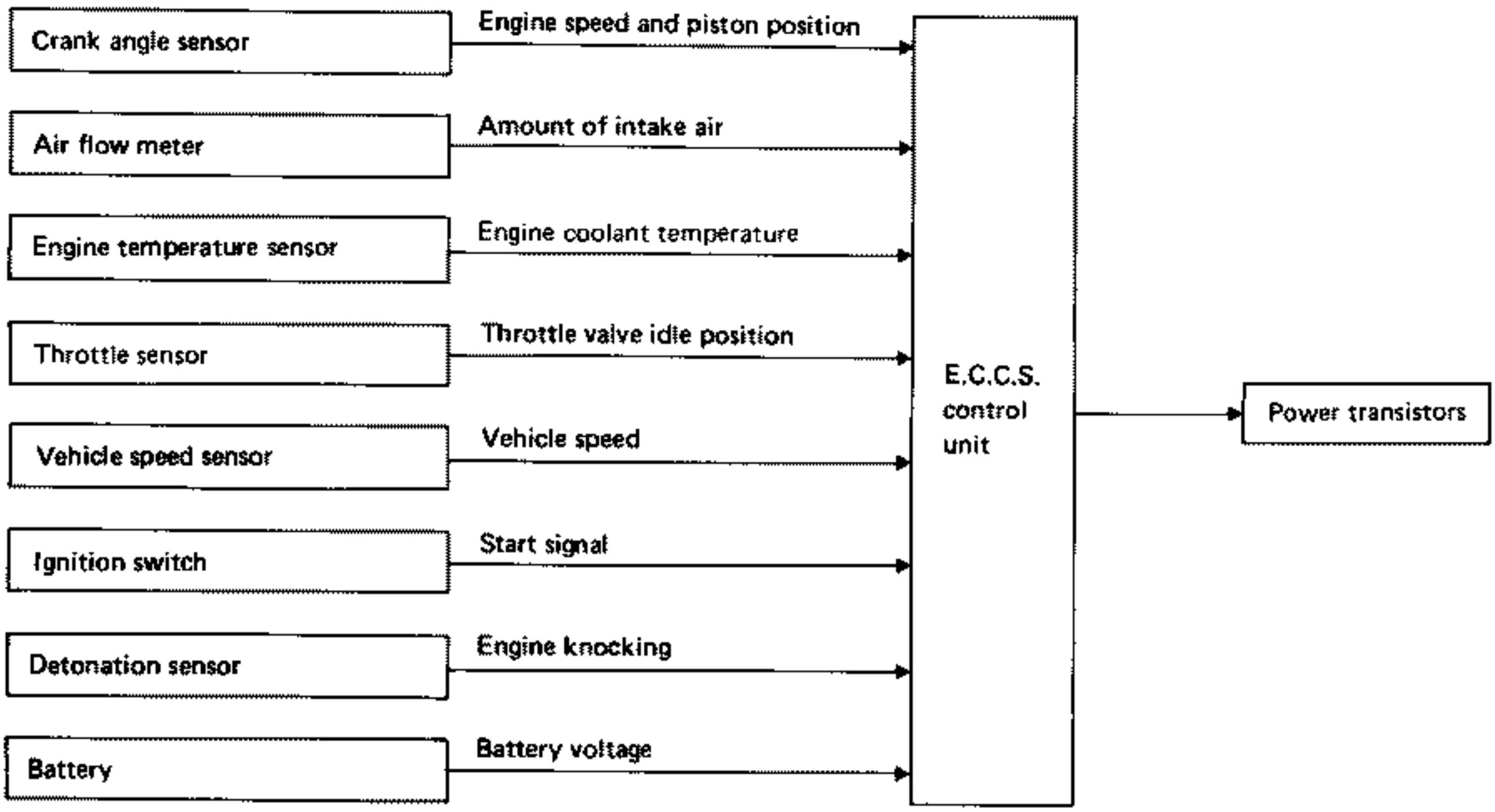

Ignition Timing Control (Cont'd)

SYSTEM DESCRIPTION

The ignition timing is controlled by the E.C.U. in order to maintain the best air-fuel ratio in response to every running condition of the engine.
The ignition timing data is stored in the ROM located in the E.C.U. This data forms the map shown below.
The E.C.U. detects information such as the injection pulse width and crank angle sensor signal which varies every moment. Then responding to this information, ignition signals are transmitted to the power transistor.

e.g. N: 1,800 rpm, Tp: 1.50 msec
A °B.T.D.C.

In addition to this,
1) At starting
2) During warm-up
3) At idle
4) At low battery voltage

the ignition timing is revised by the E.C.U. according to the other data stored in the ROM.

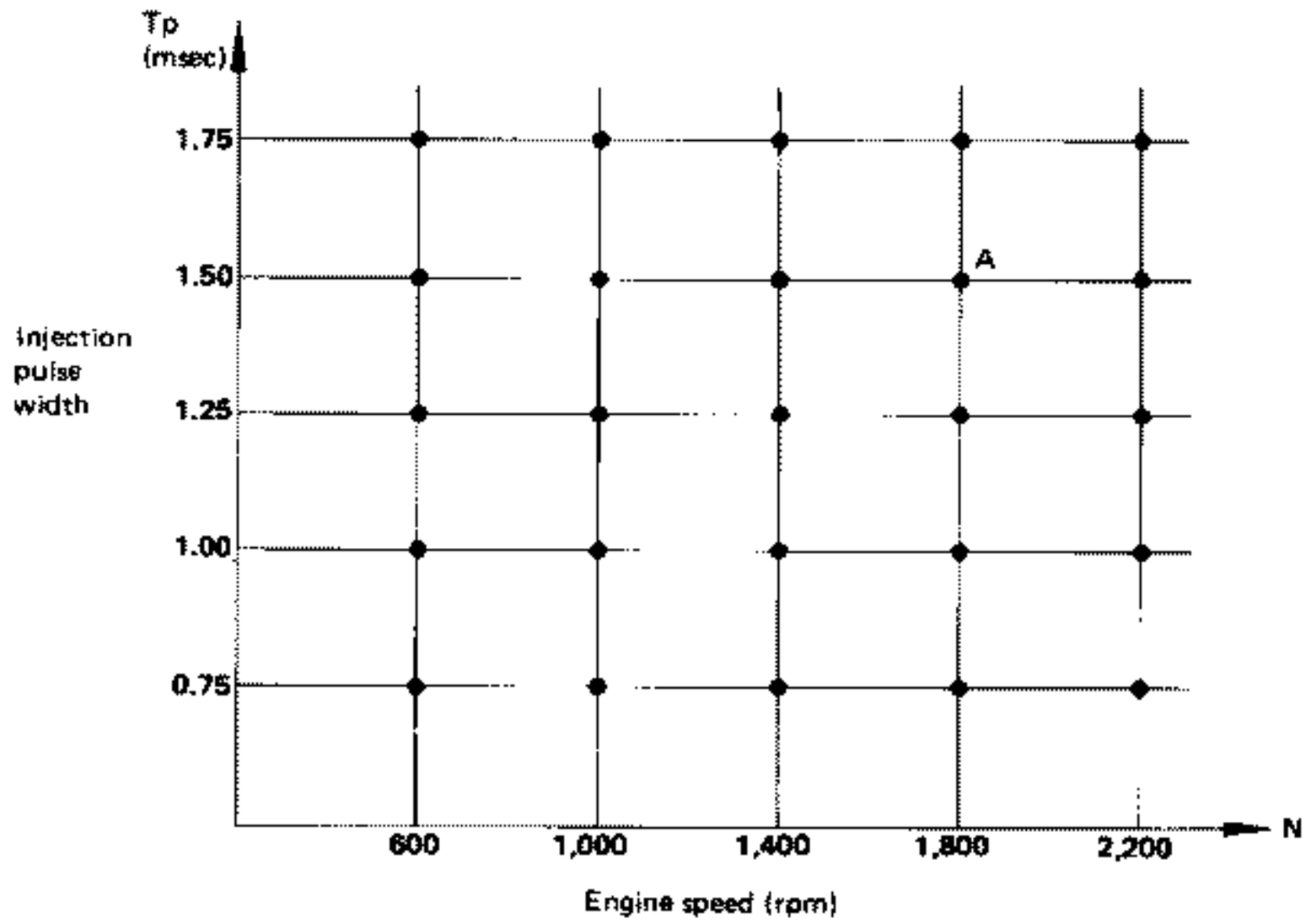

SEC750A

The retard system, actuated by the detonation sensor, is designed only for emergencies. The basic ignition timing is pre-programmed within the anti-knocking zone, even if recommended fuel is used under dry conditions. Consequently, the retard system does not operate under normal driving conditions.

However, if engine knocking occurs, the detonation sensor monitors the condition and the signal is transmitted to the E.C.C.S. control unit. After receiving it, the control unit retards the ignition timing to eliminate the knocking condition.

Idle Speed Control

INPUT/OUTPUT SIGNAL LINE

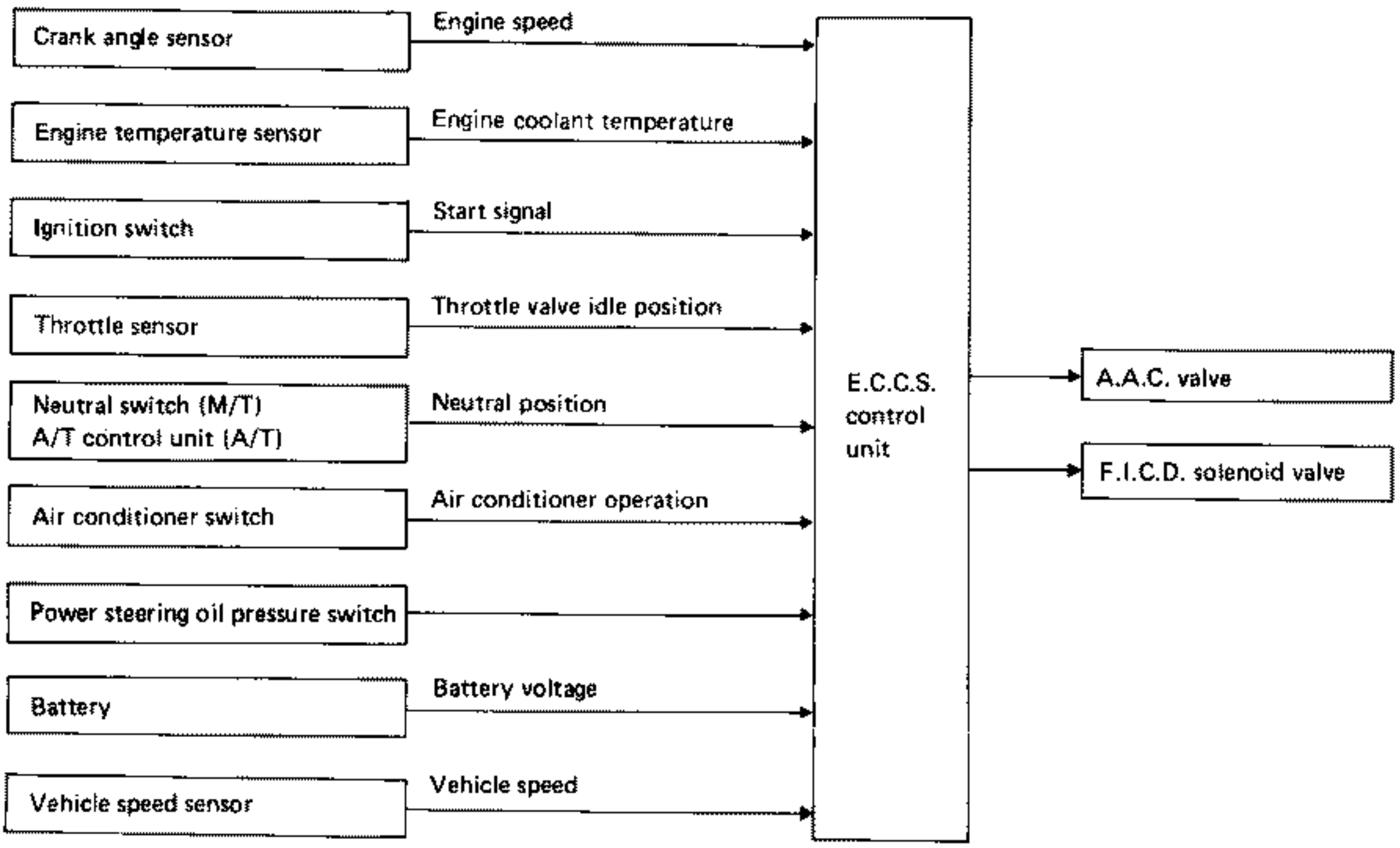

SYSTEM DESCRIPTION

This system automatically controls engine idle speed to a specified level. Idle speed is controlled through fine adjustment of the amount of air which by-passes the throttle valve via A.A.C. valve. The A.A.C. valve repeats ON/OFF operation according to the signal sent from the E.C.U. The crank angle sensor detects the actual engine speed and sends a signal to the E.C.U. The E.C.U. then controls the ON/OFF time of the A.A.C. valve so that engine speed coincides with the target value memorized in ROM. The target engine speed is the lowest speed at which the engine can operate steadily. The optimum value stored in the ROM is determined by taking into consideration various engine conditions, such as noise and vibration transmitted to the vehicle interior, fuel consumption, and engine load.

Fuel Pump Control

INPUT/OUTPUT SIGNAL LINE

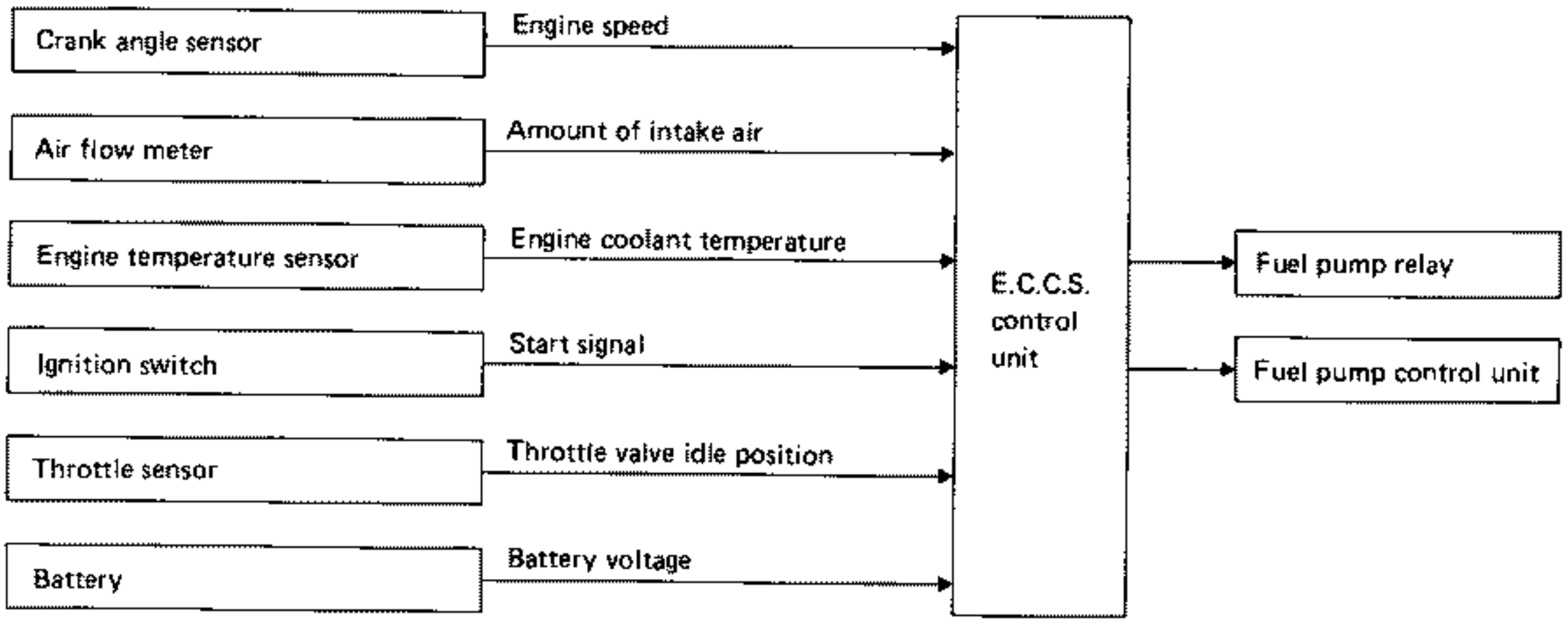

SYSTEM DESCRIPTION

Fuel pump and air regulator ON-OFF control

The E.C.U. activates the fuel pump for several seconds after the ignition switch is turned on to improve engine start-up. If the E.C.U. receives a 1° signal from the crank angle sensor, it knows that the engine is rotating, and causes the pump to activate. If the 1° signal is not received when the ignition switch is on, the engine stalls. The E.C.U. stops pump operation and prevents battery discharging, thereby improving safety. The E.C.U. does not directly drive the fuel pump. It controls the ON/OFF fuel pump relay, which in turn controls the fuel pump.

Condition	Fuel pump operation
Ignition switch is turned to ON.	Operates for 1 second
Engine running and cranking	Operates
When engine is stopped	Stops in 1.5 seconds
Except as shown above	Stops

Fuel pump voltage control

The fuel pump is controlled by the fuel pump control unit adjusting the voltage supplied to the fuel pump.

Condition	Supplied voltage	
	Turbo model	Non-turbo model
• 1 second after ignition switch is turned ON • Engine cranking • 30 (*NA)/5 (**TC) seconds after engine start [above 50°C (122°F)] • Engine temperature below 10°C (50°F) • Engine is running under heavy load	Battery voltage	Battery voltage
• Engine is running under middle load	Approx. 7V	Battery voltage
• Except the above	Approx. 6V	Approx. 8V

*NA: Non-turbo model **TC: Turbo model

E.G.R. (Exhaust Gas Recirculation) Control

INPUT/OUTPUT SIGNAL LINE

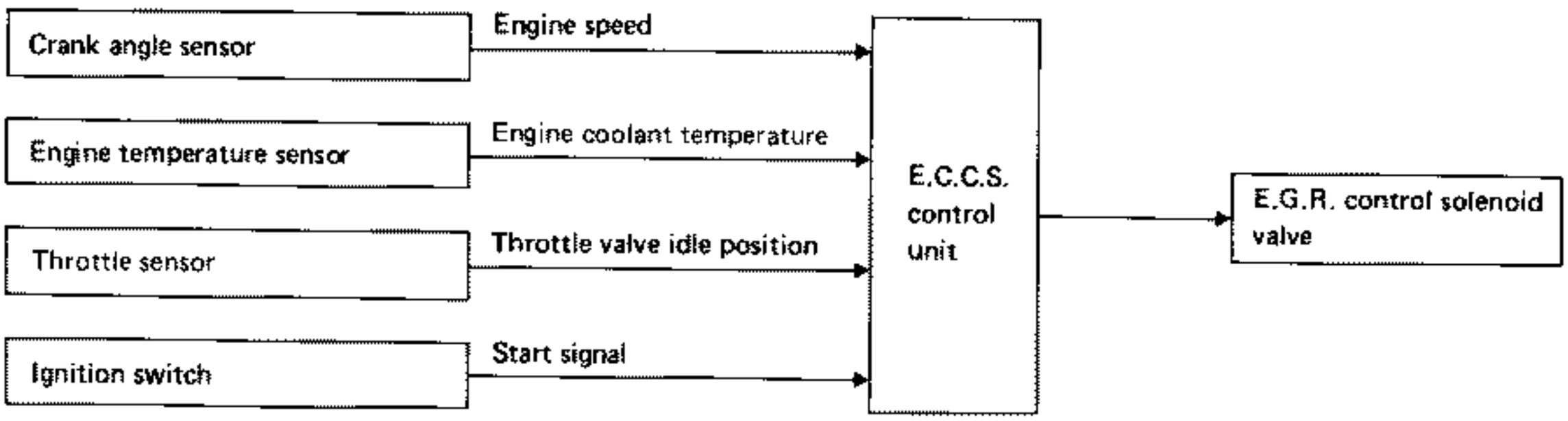

SYSTEM DESCRIPTION

In addition, a system is provided which precisely cuts and controls port vacuum applied to the E.G.R. valve to suit engine operating conditions. This cut-and-control operation is accomplished through the E.C.U. When the E.C.U. detects any of the following conditions, current flows through the solenoid valve in the E.G.R. control vacuum line.

This causes the port vacuum to be discharged into the atmosphere so that the E.G.R. control valve remains closed.

1) Low engine temperature
2) Engine starting
3) High-speed engine operation
4) Engine idling
5) Excessively high engine temperature

Air Induction Valve (A.I.V.) Control

INPUT/OUTPUT SIGNAL LINE

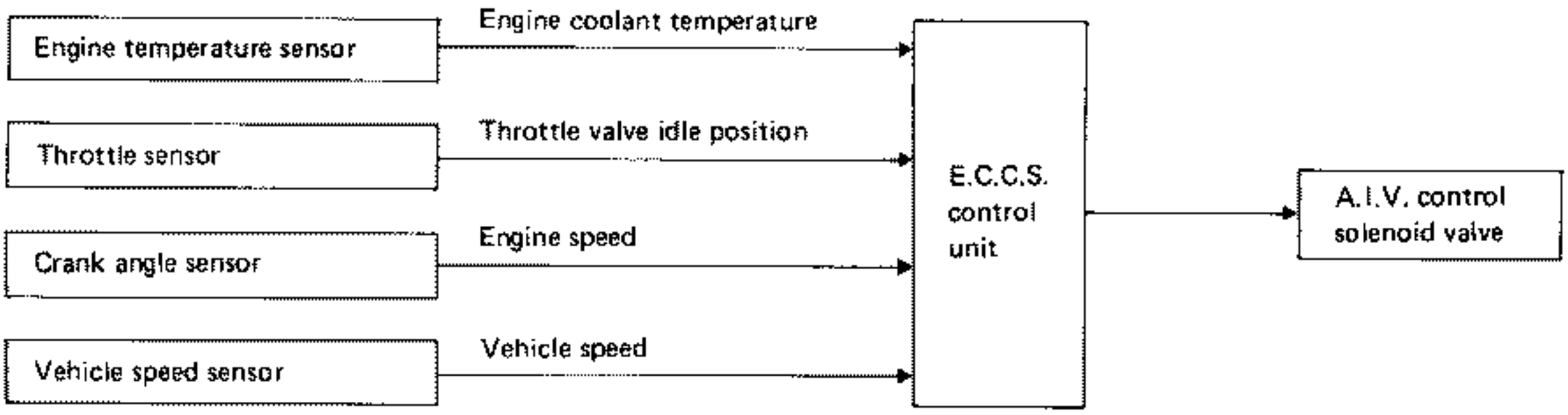

SYSTEM DESCRIPTION

The air induction system is designed to send secondary air to the exhaust manifold, utilizing the vacuum caused by exhaust pulsation in the exhaust manifold.

The exhaust pressure in the exhaust manifold usually pulsates in response to the opening and closing of the exhaust valve and decreases below atmospheric pressure periodically.

If a secondary air intake pipe is opened to the atmosphere under vacuum conditions, secondary air can be drawn into the exhaust manifold in proportion to the vacuum.

The air induction valve is controlled by the E.C.C.S. control unit, corresponding to the engine temperature. When the engine is cold, the A.I.V. control system operates to reduce HC and CO. This system also operates during deceleration for the purpose of blowing off water around the air induction valve.

Engine condition	Engine coolant temperature °C (°F)	Vehicle speed km/h (MPH)	A.I.V. control solenoid valve	A.I.V. control system
Throttle valve is at idle position	Below 64 (147)	Any condition	ON	Operates
	Above 65 (149)	Below 24 (15)		

Fuel Pressure Regulator Control

INPUT/OUTPUT SIGNAL LINE

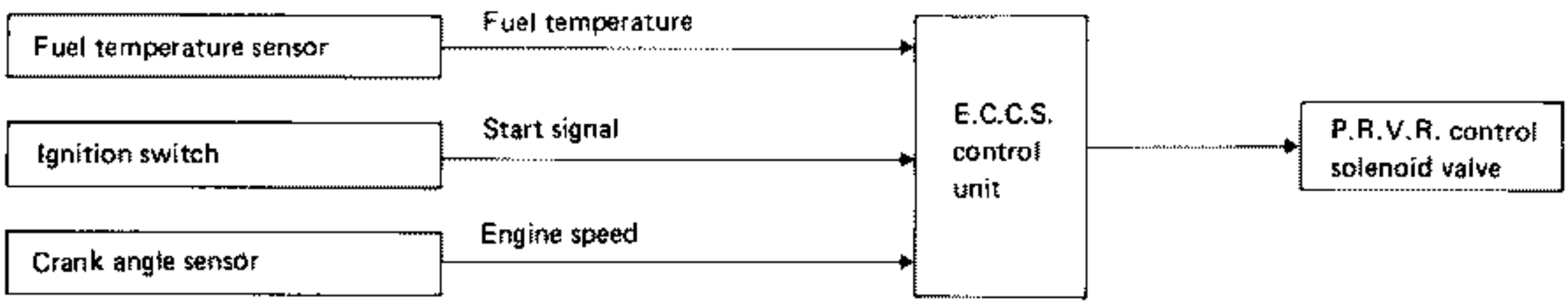

SYSTEM DESCRIPTION

The fuel "pressure-up" control system briefly increases fuel pressure for improved starting performance of a hot engine. Under normal operating conditions, manifold vacuum is applied to the fuel pressure regulator. When starting the engine, however, the E.C.U. allows current to flow through the ON/OFF solenoid valve in the control vacuum line, opening this line to the atmosphere. As a result, atmospheric pressure is applied, restricting the fuel return line so as to increase fuel pressure.

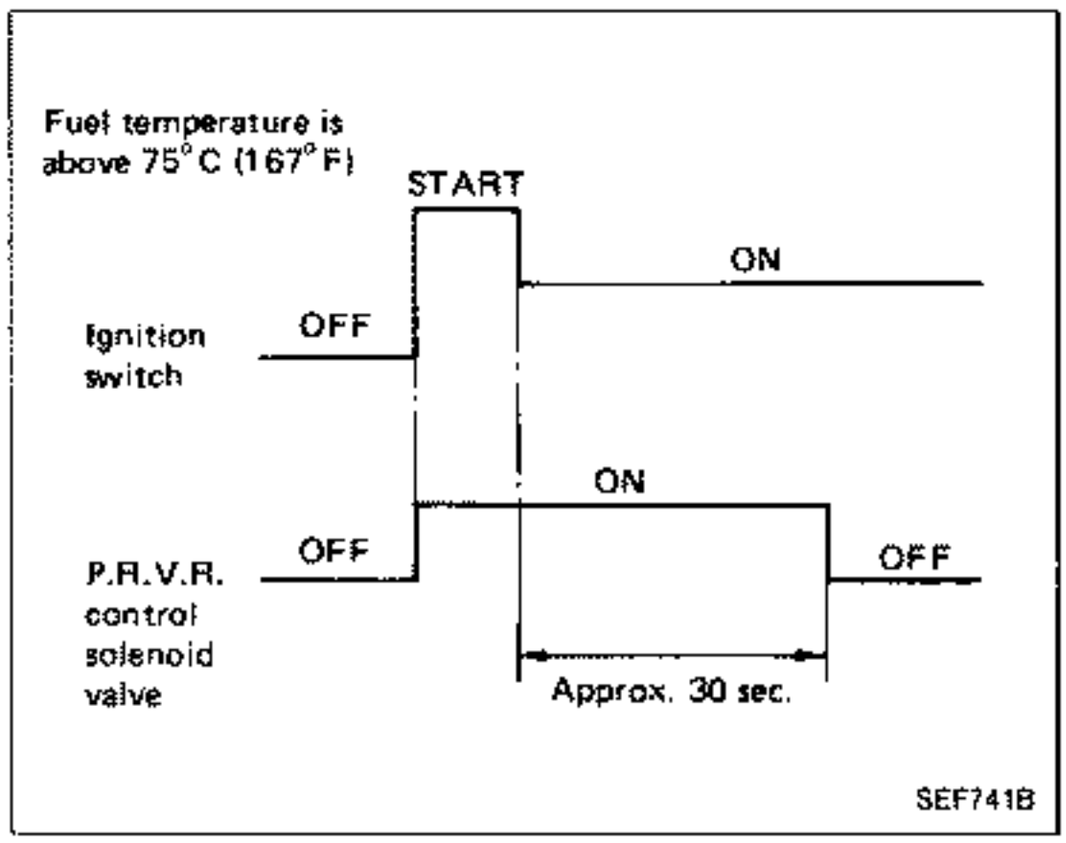

Acceleration Cut Control

INPUT/OUTPUT SIGNAL LINE

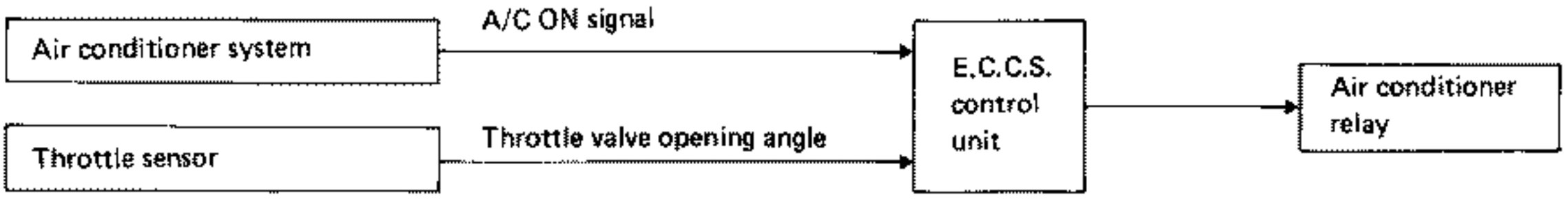

SYSTEM DESCRIPTION

When the accelerator pedal is fully depressed, the air conditioner is turned off for a few seconds. This system improves acceleration when the air conditioner is used.

Valve Timing Control

INPUT/OUTPUT SIGNAL LINE

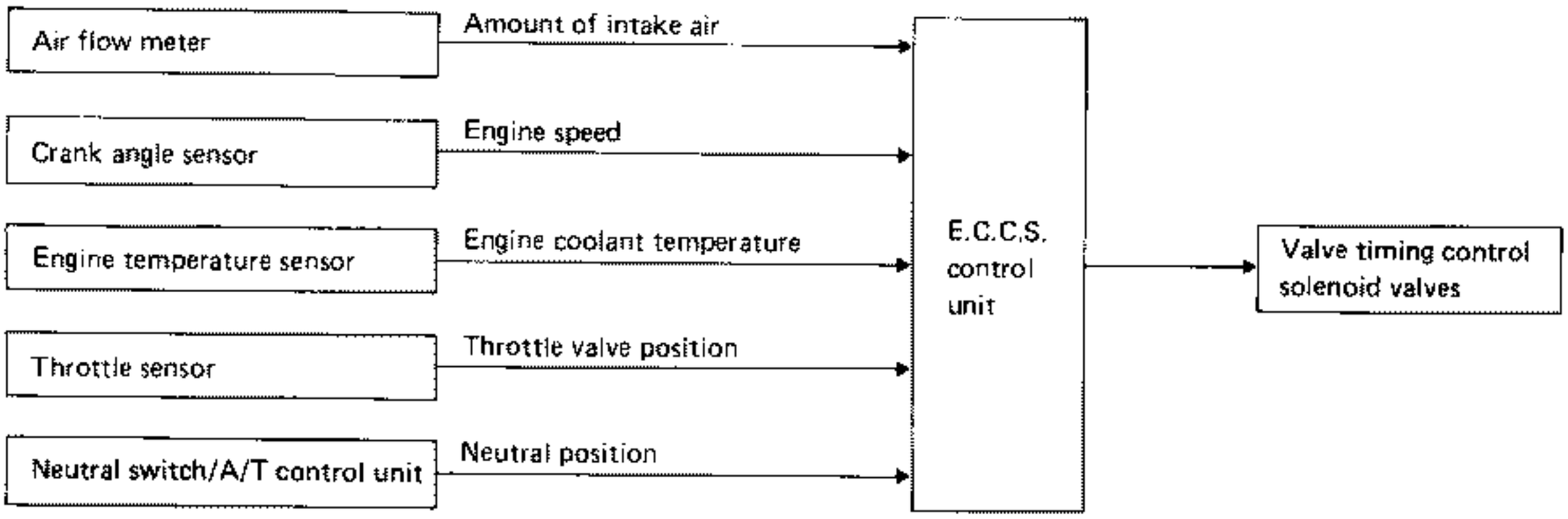

SYSTEM DESCRIPTION

The valve timing control system is utilized to increase engine performance. Intake valve opening and closing time is controlled, according to the engine operating conditions, by the E.C.U.
Engine coolant temperature signals, engine speed, amount of intake air, throttle valve position and gear position are used to determine intake valve timing.
The intake camshaft pulley position is regulated by oil pressure, which is controlled by the valve timing control solenoid valve.

Valve Timing Control (Cont'd)

OPERATION

Engine operating condition	Valve timing control solenoid valve	Intake valve opening and closing time	Valve overlap	Engine torque curve
Idling, high speed	OFF	Retard	Decreased	Ⅰ
Low to medium speed	ON	Advance	Increased	Ⅱ

(I) Valve timing control solenoid valve is OFF.

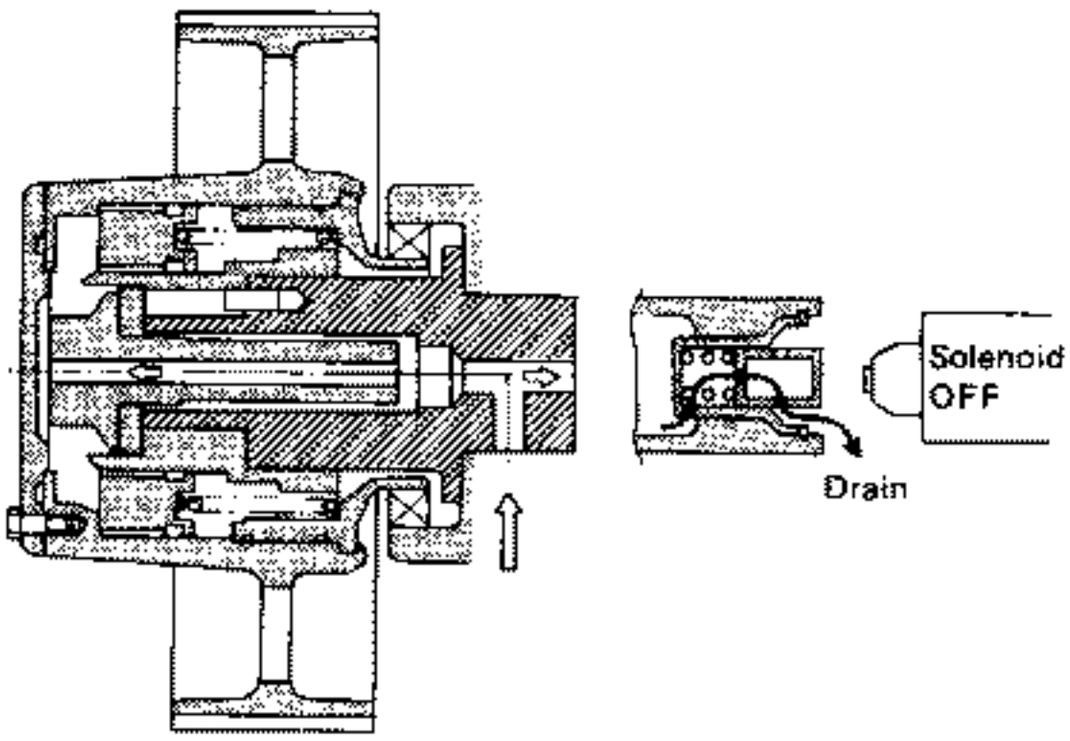

(II) Valve timing control solenoid valve is ON.

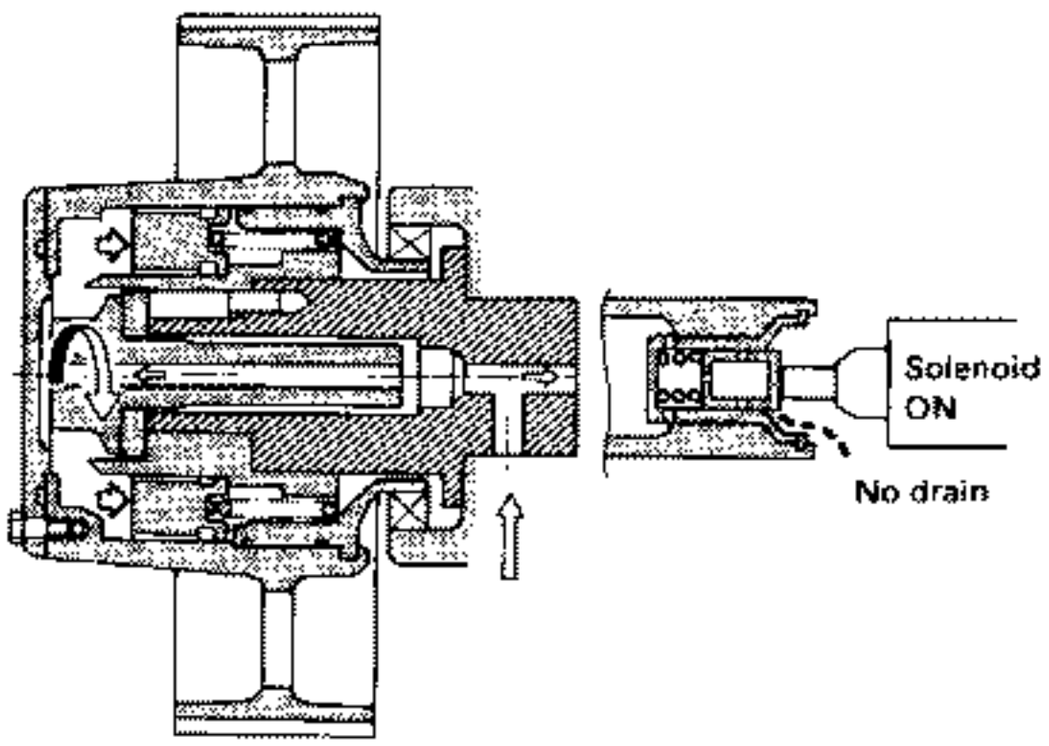

SEF009I

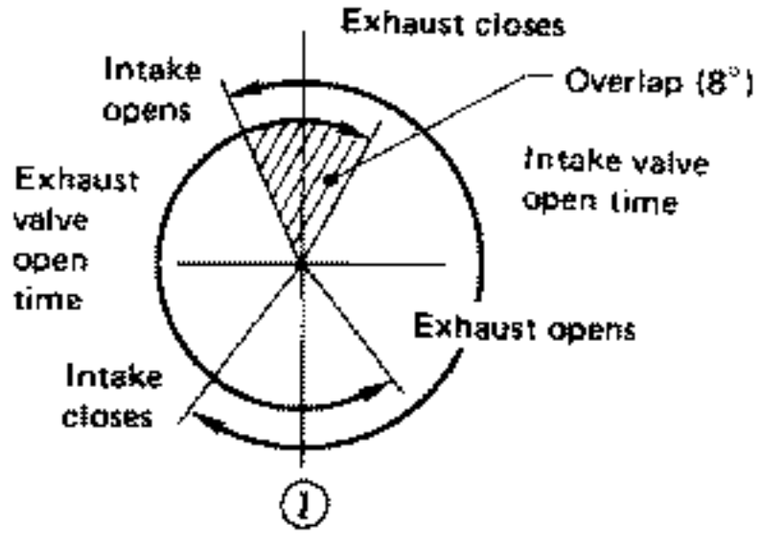

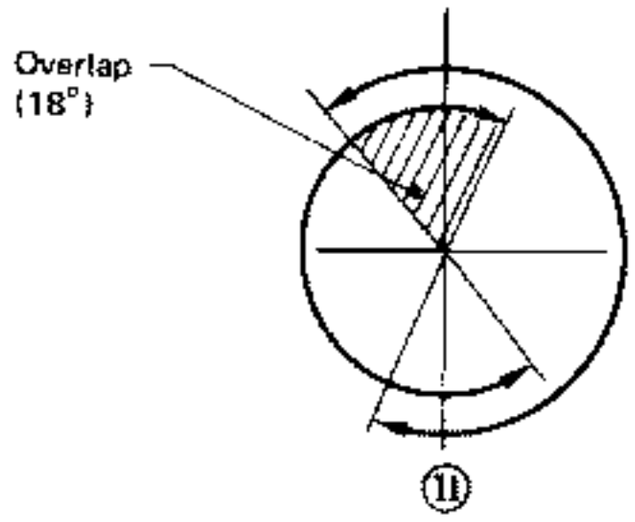

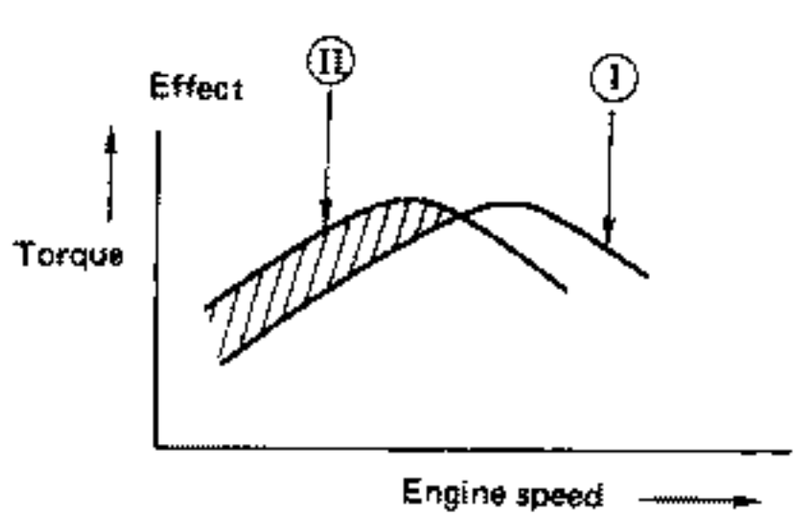

SEF010I

Radiator Fan Control

INPUT/OUTPUT SIGNAL LINE

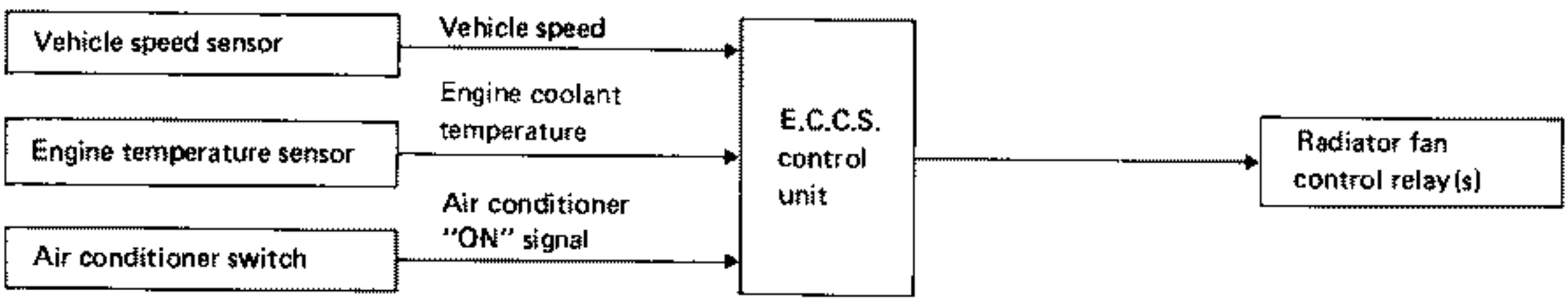

The E.C.U. controls the radiator fan corresponding to the vehicle speed, engine temperature, and air conditioner ON signal. The non-turbo model has 2-step control [ON (HIGH)/OFF], and the turbo model 3-step control [HIGH/LOW/OFF].

OPERATION

[Non-turbo model]

Air conditioner switch is "OFF"

Engine coolant temperature °C (°F)	Radiator fan
Below 104 (219)	OFF
Above 105 (221)	ON

Air conditioner switch is "ON"

Vehicle speed km/h (MPH)	Engine coolant temperature °C (°F)	Radiator fan
Below 39 (24)	Below 94 (201)	OFF
	Above 95 (203)	ON (HIGH)
Above 40 (25)	Below 104 (219)	OFF
	Above 105 (221)	ON (HIGH)

[Turbo model]

Air conditioner switch is "OFF"

Engine coolant temperature °C (°F)	Radiator fan
Below 104 (219)	OFF
Above 105 (221)	ON

Air conditioner switch is "ON"

Vehicle speed km/h (MPH)	Engine coolant temperature °C (°F)	Radiator fan
Below 39 (24)	Below 89 (192)	OFF
	Between 90 (194) and 99 (210)	LOW
	Above 100 (212)	HIGH
Above 40 (25)	Below 104 (219)	OFF
	Above 105 (221)	HIGH

Wastegate Valve Control

INPUT/OUTPUT SIGNAL LINE

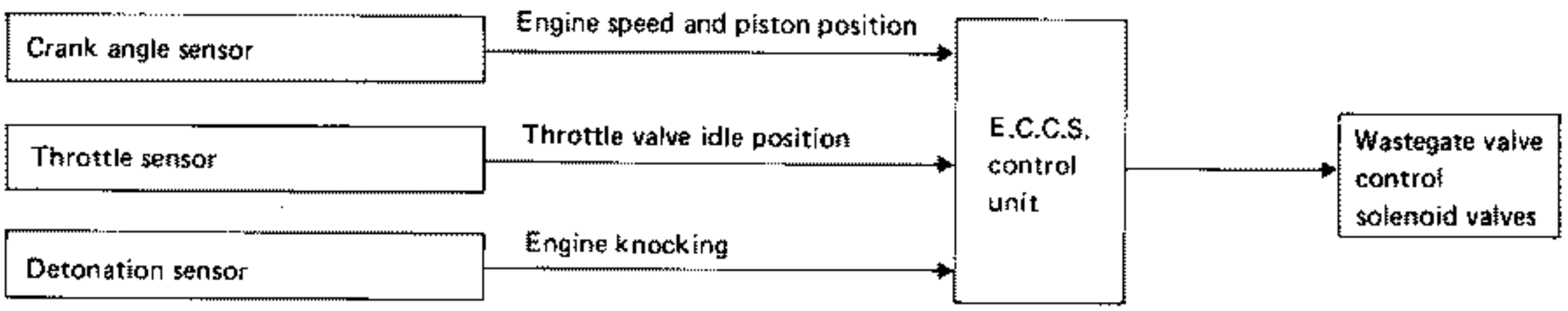

SYSTEM DESCRIPTION

The wastegate valve control solenoid valve changes the source vacuum which activates the actuator. This results in a suitable turbo-pressure.

When detonation signs are detected, which means a low octane fuel is being used, the solenoid valve turns OFF, and turbocharger pressure becomes low.

OPERATION

Engine condition	Wastegate valve control solenoid valves	Wastegate valve actuators	Turbocharger pressure
• Engine running or cranking • Throttle sensor output voltage: more than 0.1V • Judged fuel quality: high octane (Detecting no sign of detonation)	ON	Lead to suction pipe or turbocharger compressor outlet	HIGH
• Except the above	OFF	Lead to turbocharger compressor outlet	LOW

Fail-safe System

C.P.U. MALFUNCTION OF E.C.U.

Input/output signal line

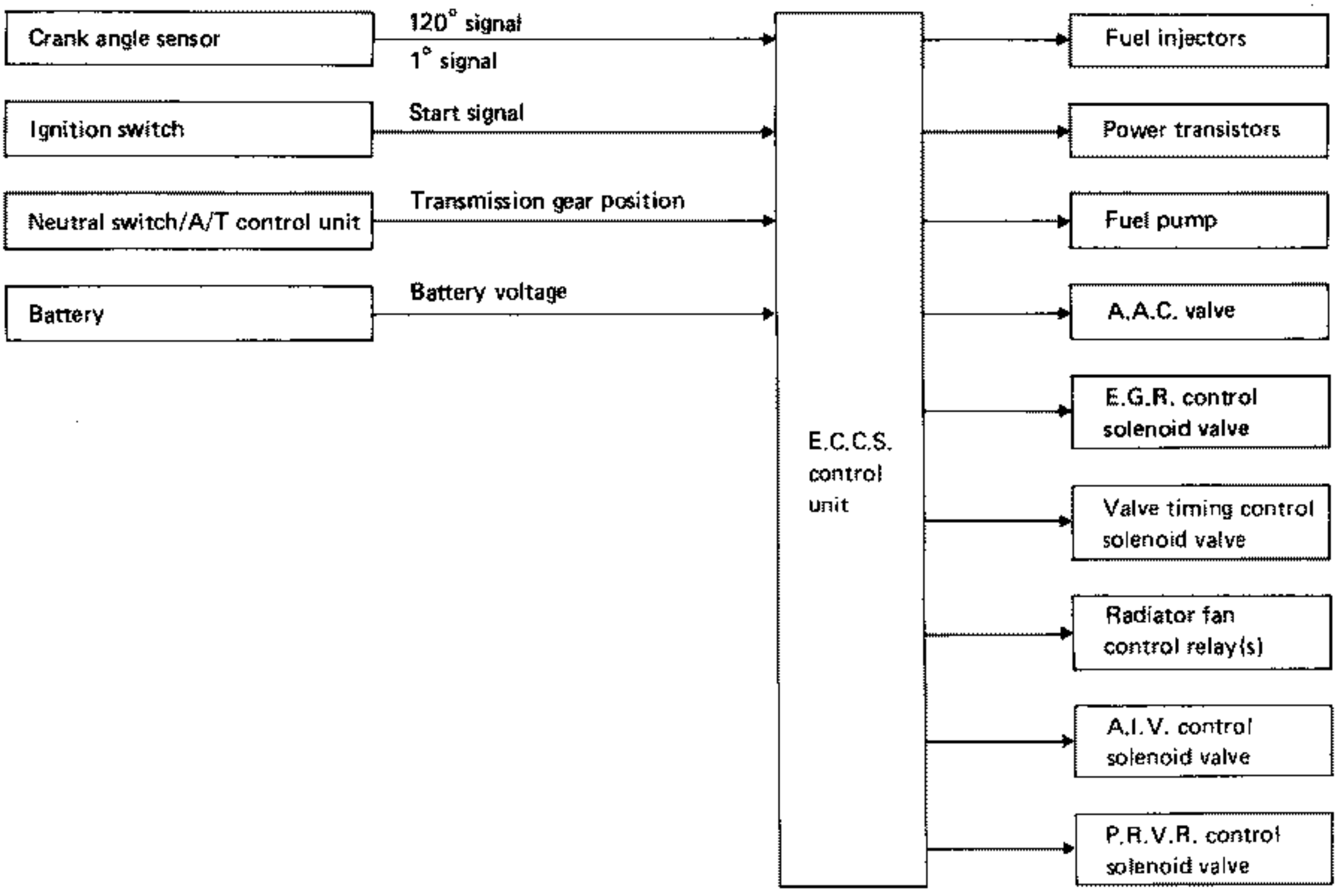

Outline

The fail-safe system makes engine starting possible if there is something malfunctioning in the E.C.U.'s C.P.U. circuit.

In former models, engine starting was difficult under the previously mentioned conditions. But with the provisions in this fail-safe system, it is possible to start the engine.

Fail-safe System (Cont'd)

Fail-safe system activating condition when E.C.U. is malfunctioning

The fail-safe mode operation starts when the computing function of the E.C.U. is judged to be malfunctioning.
When the fail-safe system activates, i.e. if a malfunction condition is detected in the C.P.U. of the E.C.U., the CHECK ENGINE LIGHT on the instrument panel lights to warn the driver.

Engine control, with fail-safe system, operates when E.C.U. is malfunctioning

When the fail-safe system is operating, fuel injection, ignition timing, fuel pump operation, engine idle speed, E.G.R. operation, and so on are controlled under certain limitations.

Cancellation of fail-safe system when E.C.U. is malfunctioning

Activation of the fail-safe system is canceled each time the ignition switch is turned OFF. The system is reactivated if all of the activating conditions are satisfied after turning the ignition switch from OFF to ON.

AIR FLOW METER MALFUNCTION

If the air flow meter output voltage is above or below the specified value, the E.C.U. senses an air flow meter malfunction. In case of a malfunction, the throttle sensor substitutes for the air flow meter.
Although the air flow meter is malfunctioning, it is possible to start the engine and drive the vehicle. But engine speed will not rise more than 2,400 rpm in order to inform the driver of fail-safe system operation while driving.

Operation

Engine condition	Starter switch	Fail-safe system	Fail-safe functioning
Stopped	ANY	Does not operate	—
Cranking	ON	Operates	Engine will be started by a pre-determined injection pulse on E.C.U.
Running	OFF		Engine speed will not rise above 2,400 rpm

ENGINE TEMPERATURE SENSOR MALFUNCTION

When engine temperature sensor output voltage is below or above the specified value, engine coolant temperature is fixed at the preset value as follows:

Engine condition	Engine coolant temperature preset value °C (°F)
Start	20 (68)
Running	80 (176)

FUEL TEMPERATURE SENSOR MALFUNCTION

When fuel temperature sensor output voltage is below or above the specified value, fuel temperature is fixed at the preset value as follows:

Engine condition	Fuel temperature preset value °C (°F)
Start	20 (68)
Running	80 (176)

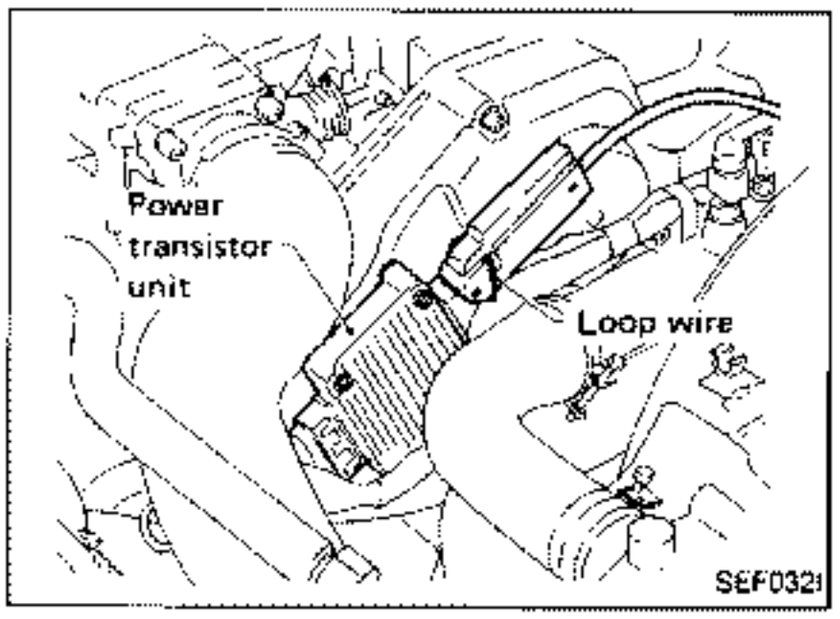

Direct Ignition System

CHECKING IDLE SPEED AND IGNITION TIMING

Idle speed

- **Method A (With pulse type tachometer)**

Clamp loop wire as shown.

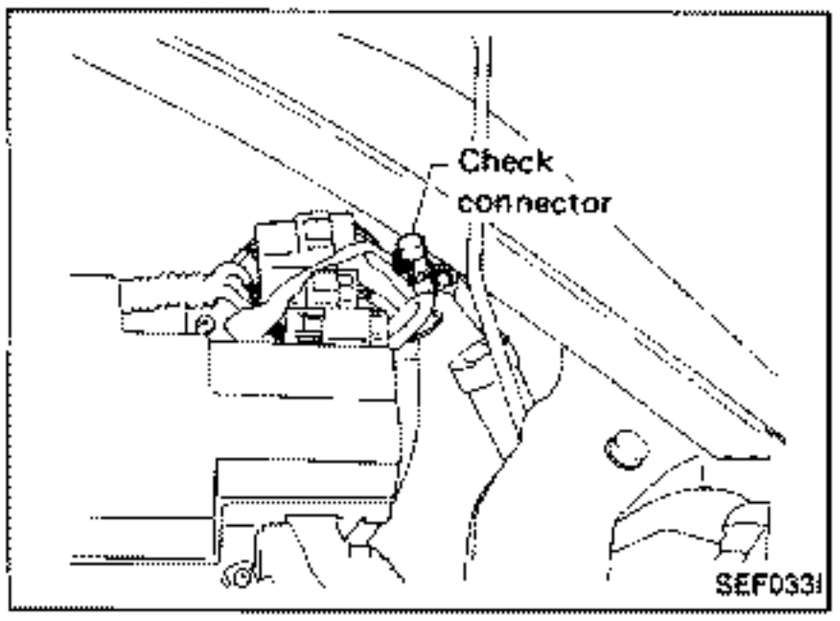

- **Method B (With voltage type tachometer)**

1. Disconnect check connector (Harness color: Y/R) for tachometer.

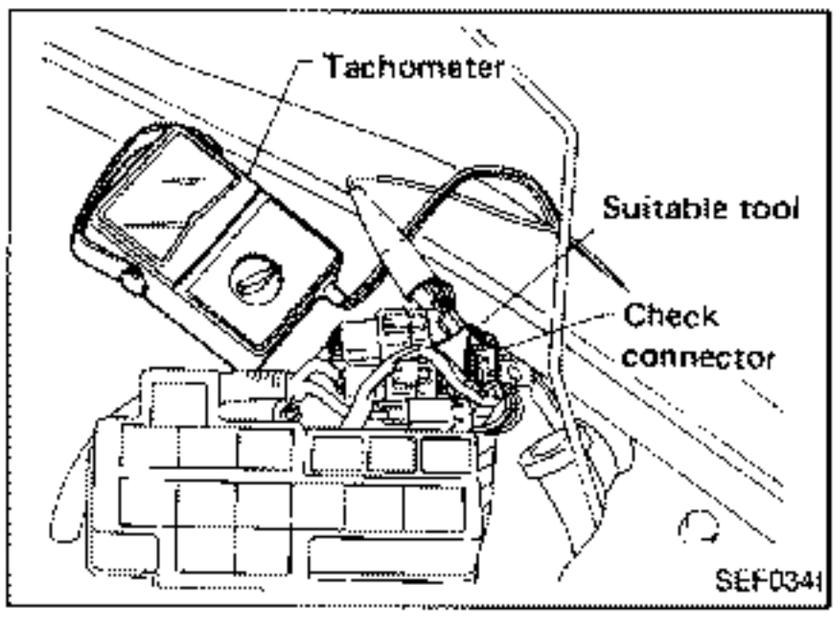

2. Connect tachometer using a suitable tool.

Ignition timing

- **Method A (Without S.S.T.)**

1. Remove No. 1 ignition coil.

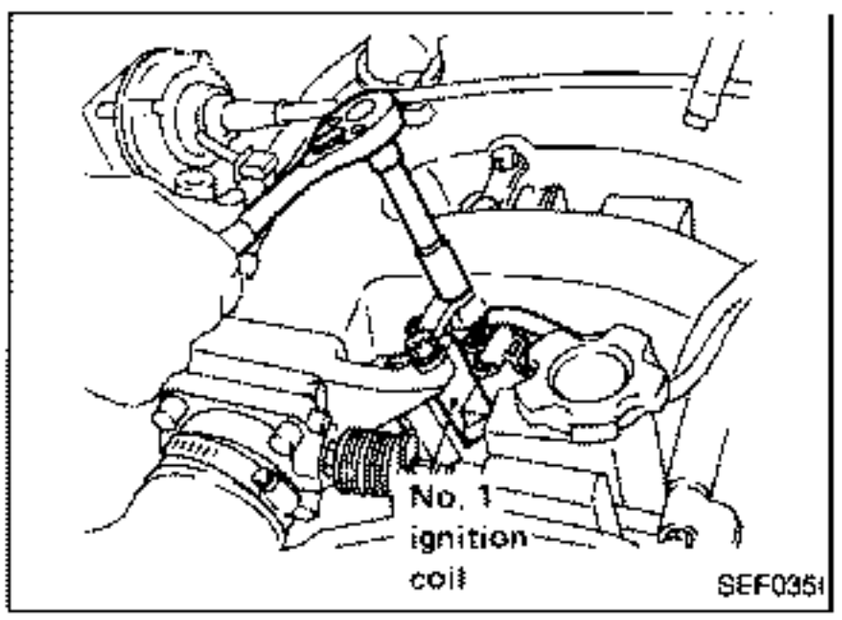

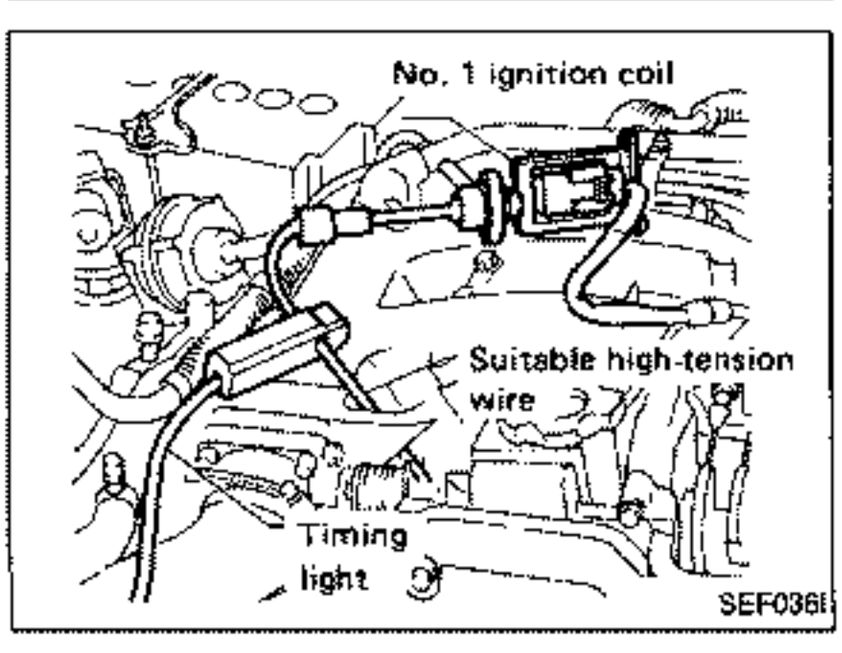

2. Connect No. 1 ignition coil and No. 1 spark plug with a suitable high-tension wire as shown, and attach timing light clamp to this wire.
3. Check ignition timing.

Direct Ignition System (Cont'd)

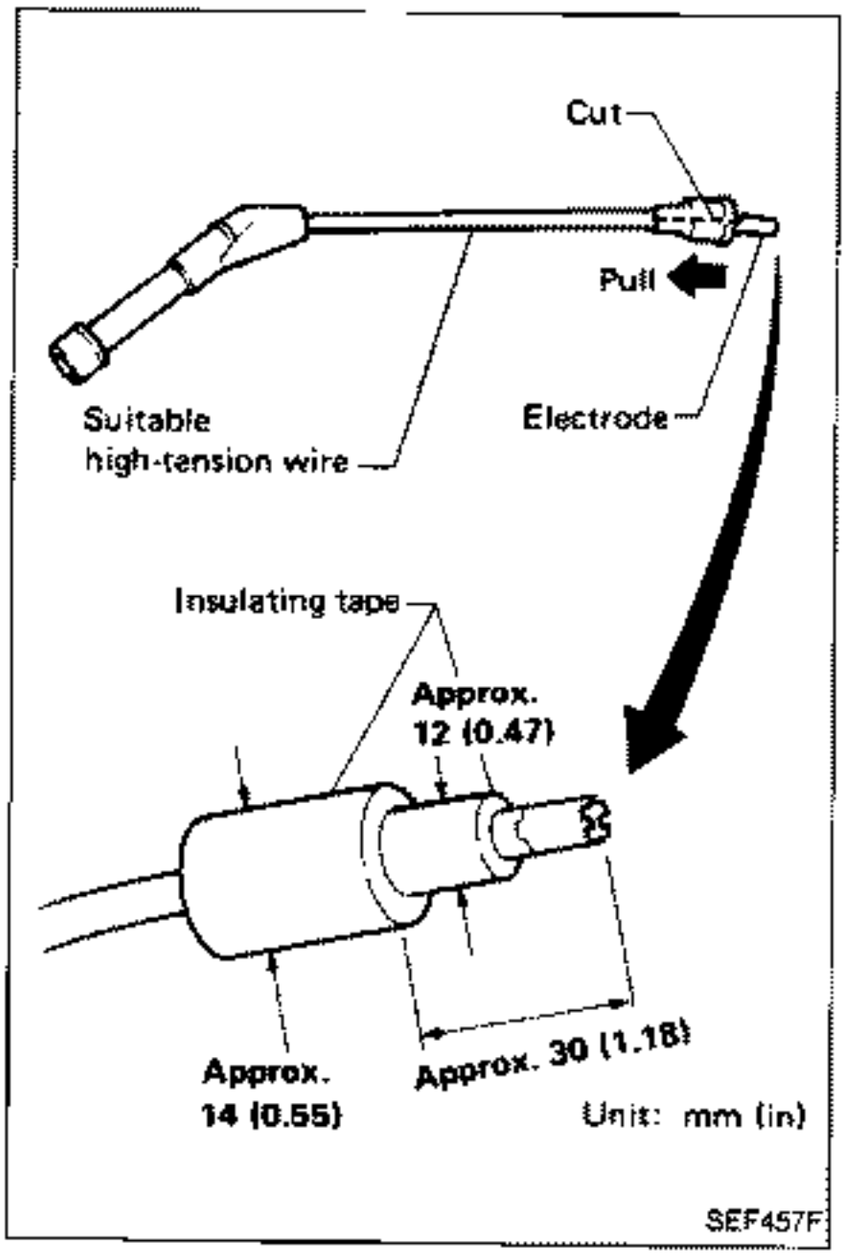

4. For above procedures, enlarge the end of a suitable high-tension wire with insulating tape as shown.

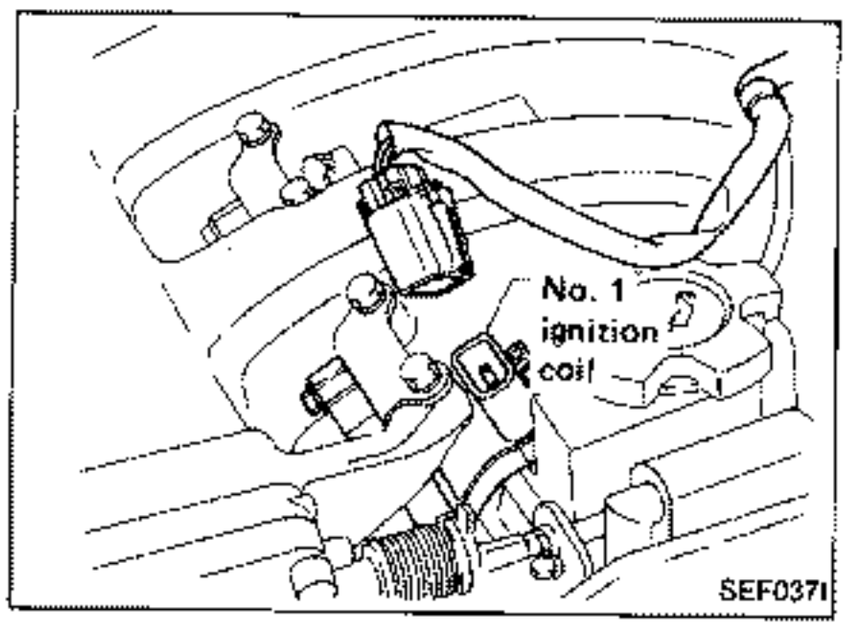

- **Method B (With S.S.T.)**

1. Disconnect connector of No. 1 ignition coil.

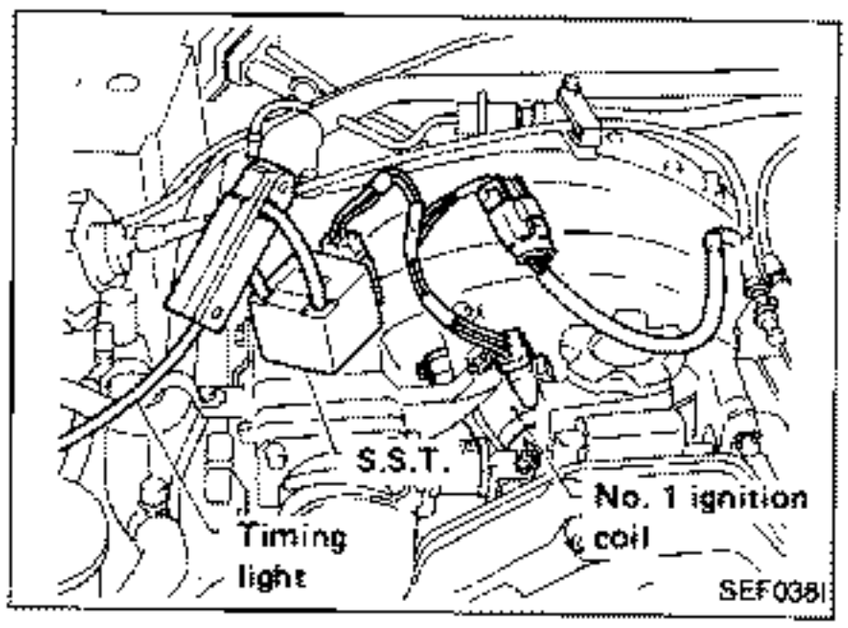

2. Connect S.S.T. and clamp wire with timing light as shown.
3. Check ignition timing.

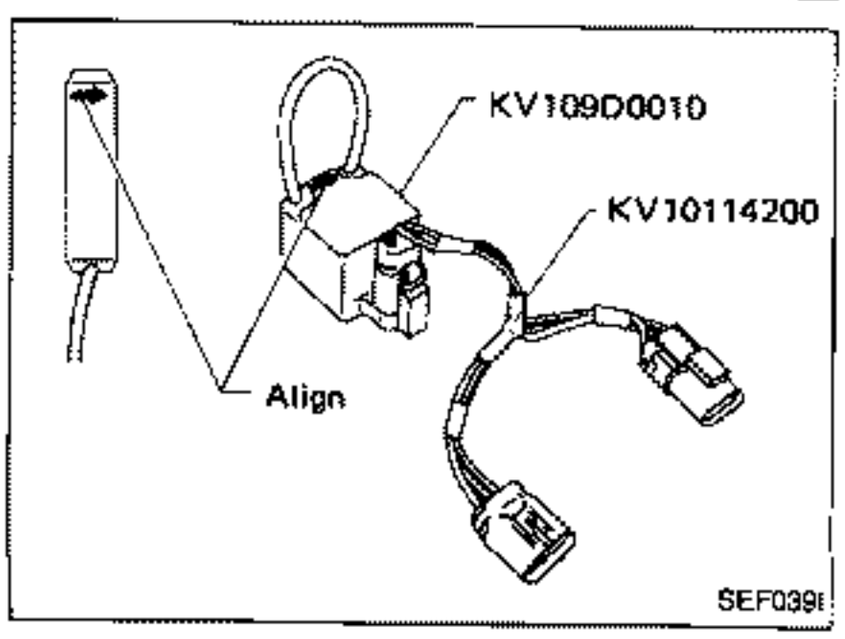

Align direction marks on S.S.T. and timing light clamp if aligning mark is punched.

PREPARATION

1. Make sure that the following parts are in good order.
- Battery
- Ignition system
- Engine oil and coolant levels
- Fuses
- E.C.U. harness connector
- Vacuum hoses
- Air intake system
  (Oil filler cap, oil level gauge, etc.)
- Fuel pressure
- Engine compression
- E.G.R. control valve operation
- Throttle valve

2. On air conditioner equipped models, checks should be carried out while the air conditioner is "OFF".
3. On automatic transmission equipped models, when checking idle rpm, ignition timing and mixture ratio, checks should be carried out while shift lever is in "N" position.
4. When measuring "CO" percentage, insert probe more than 40 cm (15.7 in) into tail pipe.
5. Turn off headlamps, heater blower, rear defogger.
6. Keep front wheels pointed straight ahead.
7. Make the check after the radiator fan has stopped.

WARNING:
Apply parking brake and block both front and rear wheels with chocks.

Overall inspection sequence

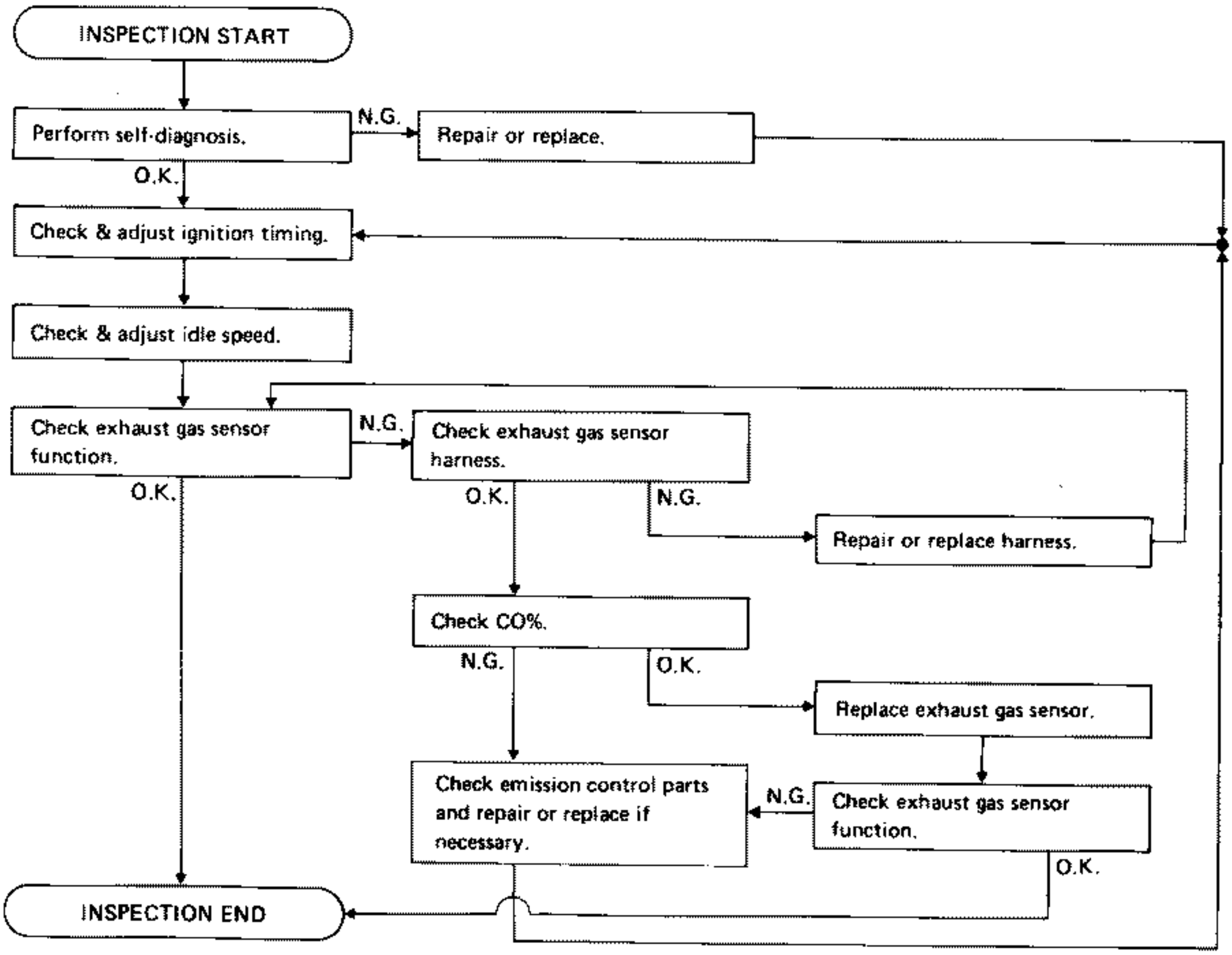

START

Visually check the following:
- Air cleaner clogging
- Hoses and ducts for leaks
- E.G.R. control valve operation
- Electrical connectors
- Gasket

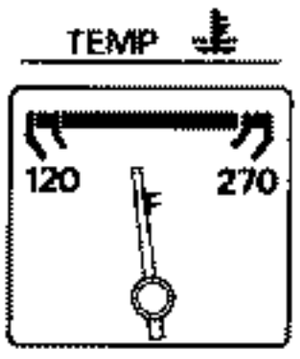

SEF246F

Start engine and warm it up until water temperature indicator points to the middle of gauge.



SEF247F

Open engine hood and run engine at about 2,000 rpm for about 2 minutes under no-load.

Perform E.C.C.S. self-diagnosis.

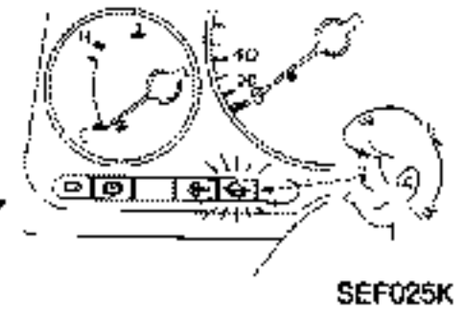
SEF025K

O.K. | N.G.

Repair or replace components as necessary.

Does engine run smoothly?

O.K. | N.G.

Clean injectors.

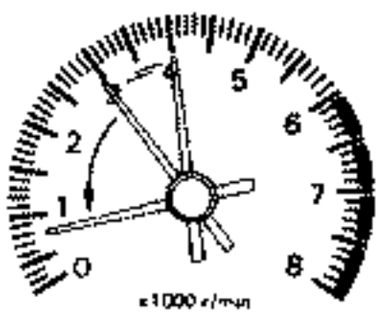

SEF248F

Race engine two or three times under no-load, then run engine at idle speed.

Check ignition timing with a timing light.

$15^\circ \pm 2^\circ$ B.T.D.C.

O.K. | N.G.

Adjust ignition timing by turning crank angle sensor after loosening securing bolts.

(A) (B) (H)



SEF364I



SEF247F

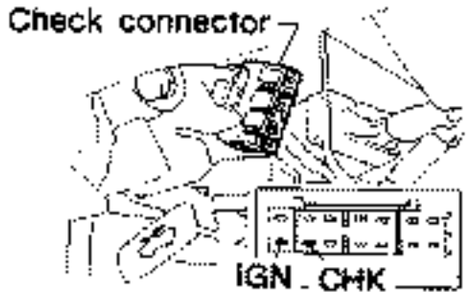

SMA325C

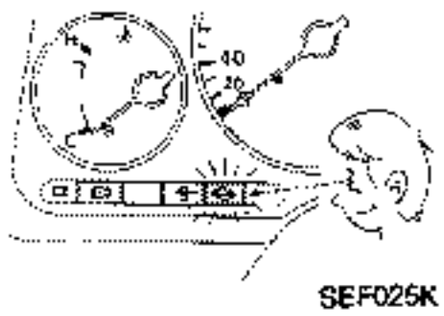

SEF025K

Ⓐ

Check idle speed.

	A/T*	M/T
Non-turbo	770±50 rpm	700±50 rpm
Turbo	750±50 rpm	

*: in "N" position

O.K.

N.G.

Disconnect A.A.C. valve harness connector.

Adjust idle speed by turning idle speed adjusting screw.

	A/T*	M/T
Non-turbo	720 rpm	650 rpm
Turbo	700 rpm	

*: in "N" position

Connect A.A.C. valve harness connector.

Run engine at about 2,000 rpm for about 2 minutes under no-load.

Set the diagnosis mode of E.C.U. to Mode II.

Ⓘ

Check left side exhaust gas sensor signal.
Make sure that inspection lamp goes on and off more than 5 times during 10 seconds (at 2,000 rpm).

Inspection lamp does not blink.

O.K.

Less than 5 times

Replace left side exhaust gas sensor.

Ⓙ

Check left side exhaust gas sensor signal.
Make sure that inspection lamp goes on and off more than 5 times during 10 seconds at 2,000 rpm.

O.K.

N.G.

Ⓚ

Check right side exhaust gas sensor signal.
Make sure that inspection lamp goes on and off more than 5 times during 10 seconds (at 2,000 rpm).

Inspection lamp does not blink.

O.K.

Less than 5 times

END

Replace right side exhaust gas sensor.

Ⓒ Ⓓ Ⓔ Ⓕ

Ⓒ

Ⓓ

Check right side exhaust gas sensor signal.
Make sure that inspection lamp goes on and off more than 5 times during 10 seconds at 2,000 rpm.

N.G. → Ⓔ

O.K.

END

Exhaust gas sensor harness connector

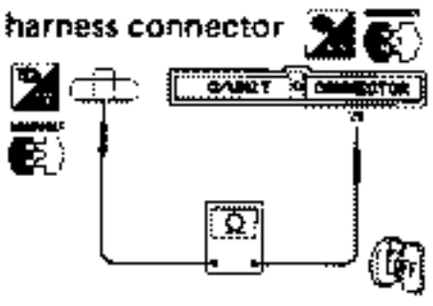

SEF571I

Check right side exhaust gas sensor harness:
1) Turn off engine and disconnect battery ground cable.
2) Disconnect 76-pin connector from E.C.U.
3) Disconnect right side exhaust gas sensor harness connector.
4) Check for continuity between terminal No. 29 of 76-pin connector and harness connector for exhaust gas sensor.

Continuity exists . . . . . O.K.
Continuity does not exist . . . . N.G.

O.K.

N.G.

Repair or replace harness. → Ⓘ

Connect 76-pin connector to E.C.U.

Check left side exhaust gas sensor harness:
1) Turn off engine and disconnect battery ground cable.
2) Disconnect 76-pin connector from E.C.U.
3) Disconnect left side exhaust gas sensor harness connector.
4) Check for continuity between terminal No. 55 of 76-pin connector and harness connector for exhaust gas sensor.

Continuity exists . . . . . O.K.
Continuity does not exist . . . . N.G.

O.K.

N.G.

Repair or replace harness. → Ⓘ

Exhaust gas sensor harness connector

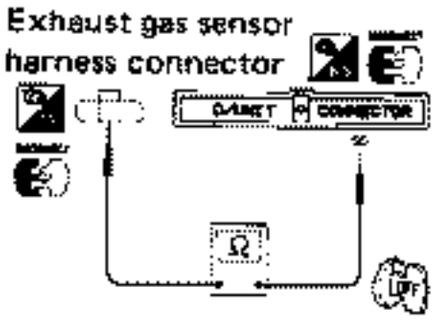

SEF363I

Connect 76-pin connector to control unit.

Ⓖ

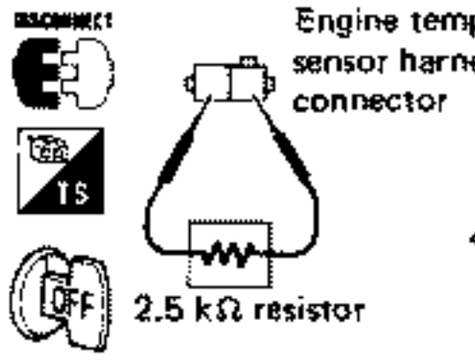

SEC242B

Ⓖ

1) Disconnect engine temperature sensor harness connector.
2) Connect a resistor (2.5 kΩ) between terminals of engine temperature sensor harness connector.
3) Disconnect A.I.V. control solenoid valve harness connector.

Start engine and warm it up until water temperature indicator points to the middle of gauge.

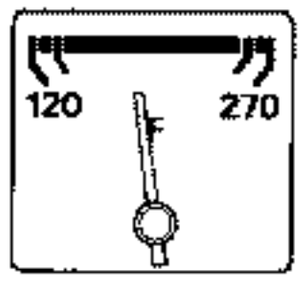

SEF246F

Race engine two or three times under no-load, then run engine at idle speed.



SEF248F

Check "CO" %.

Idle CO: 0.2 ~ 8%

After checking CO%,
1) Disconnect the resistor from terminals of engine temperature sensor.
2) Connect engine temperature sensor harness connector to engine temperature sensor.
3) Connect A.I.V. control solenoid valve harness connector.

O.K. → Ⓙ

N.G.

Connect exhaust gas sensor harness connector to exhaust gas sensor.

Check fuel pressure regulator. ← Ⓚ

Check air flow meter.

Check injector.
Clean or replace if necessary.

Check engine temperature sensor.

Check E.C.U. function* by substituting another known good E.C.U. → Ⓗ

*: E.C.U. may be the cause of a problem, but this is rarely the case.

Contents

How to Perform Trouble Diagnoses for Quick and Accurate Repair ..... EF & EC- 44
Self-diagnosis ..... EF & EC- 48
Self-diagnosis — Mode I ..... EF & EC- 50
Self-diagnosis — Mode II (Self-diagnostic results) ..... EF & EC- 50
Self-diagnosis — Mode II (Exhaust gas sensor monitor) ..... EF & EC- 53
Consult ..... EF & EC- 54
Diagnostic Procedure ..... EF & EC- 60-A
Basic Inspection ..... EF & EC- 61
Diagnostic Procedure 1 — High Idling after Warm-up ..... EF & EC- 64
Diagnostic Procedure 2 — Hunting ..... EF & EC- 65
Diagnostic Procedure 3 — Unstable Idle ..... EF & EC- 67
Diagnostic Procedure 4 — Hard to Start or Impossible to Start when the Engine is Cold ..... EF & EC- 71
Diagnostic Procedure 5 — Hard to Start or Impossible to Start when the Engine is Hot ..... EF & EC- 73
Diagnostic Procedure 6 — Hard to Start or Impossible to Start under Normal Conditions ..... EF & EC- 75
Diagnostic Procedure 7 — Hesitation when the Engine is Hot ..... EF & EC- 77
Diagnostic Procedure 8 — Hesitation when the Engine is Cold ..... EF & EC- 78
Diagnostic Procedure 9 — Hesitation under Normal Conditions ..... EF & EC- 79
Diagnostic Procedure 10 — Engine Stalls when Turning ..... EF & EC- 81
Diagnostic Procedure 11 — Engine Stalls when the Engine is Hot ..... EF & EC- 83
Diagnostic Procedure 12 — Engine Stalls when the Engine is Cold ..... EF & EC- 85
Diagnostic Procedure 13 — Engine Stalls when Stepping on the Accelerator Momentarily ..... EF & EC- 87
Diagnostic Procedure 14 — Engine Stalls after Decelerating ..... EF & EC- 89
Diagnostic Procedure 15 — Engine Stalls when Accelerating or Cruising ..... EF & EC- 93
Diagnostic Procedure 16 — Engine Stalls when the Electrical Load is Heavy ..... EF & EC- 96
Diagnostic Procedure 17 — Lack of Power and Stumble ..... EF & EC- 98
Diagnostic Procedure 18 — Detonation ..... EF & EC- 99
Diagnostic Procedure 19 — Surge ..... EF & EC-101
Diagnostic Procedure 20 — Backfire through the Intake ..... EF & EC-102
Diagnostic Procedure 21 — Backfire through the Exhaust ..... EF & EC-103
Diagnostic Procedure 22
MAIN POWER SUPPLY AND GROUND CIRCUIT ..... EF & EC-104
Diagnostic Procedure 23
CRANK ANGLE SENSOR ..... EF & EC-106
Diagnostic Procedure 24
AIR FLOW METER ..... EF & EC-110
Diagnostic Procedure 25
ENGINE TEMPERATURE SENSOR ..... EF & EC-114
Diagnostic Procedure 26
VEHICLE SPEED SENSOR ..... EF & EC-116
Diagnostic Procedure 27
IGNITION SIGNAL ..... EF & EC-118
Diagnostic Procedure 28
ENGINE CONTROL UNIT ..... EF & EC-122
Diagnostic Procedure 29
E.G.R. FUNCTION ..... EF & EC-124
Diagnostic Procedure 30
EXHAUST GAS SENSOR ..... EF & EC-128
Diagnostic Procedure 31
DETONATION SENSOR ..... EF & EC-132
Diagnostic Procedure 32
FUEL TEMPERATURE SENSOR ..... EF & EC-134
Diagnostic Procedure 33
THROTTLE SENSOR ..... EF & EC-136

Contents (Cont'd)

Diagnostic Procedure 34
INJECTOR CIRCUIT ..... EF & EC-140
Diagnostic Procedure 35
THROTTLE VALVE SWITCH (Idle position) ..... EF & EC-142
Diagnostic Procedure 36
START SIGNAL ..... EF & EC-144
Diagnostic Procedure 37
POWER STEERING OIL PRESSURE SWITCH ..... EF & EC-146
Diagnostic Procedure 38
NEUTRAL SWITCH & A/T CONTROL UNIT (NEUTRAL SIGNAL) CIRCUIT ..... EF & EC-148
Diagnostic Procedure 39
FUEL PUMP ..... EF & EC-150
Diagnostic Procedure 40
AIR REGULATOR ..... EF & EC-154
Diagnostic Procedure 41
A.A.C. VALVE ..... EF & EC-156
Diagnostic Procedure 42
F.I.C.D. SOLENOID VALVE ..... EF & EC-158
Diagnostic Procedure 43
A.I.V. CONTROL SOLENOID VALVE ..... EF & EC-160
Diagnostic Procedure 44
P.R.V.R. CONTROL SOLENOID VALVE ..... EF & EC-162
Diagnostic Procedure 45
V.T.C. SOLENOID VALVE ..... EF & EC-164
Diagnostic Procedure 46
RADIATOR FAN CONTROL ..... EF & EC-166
Diagnostic Procedure 47
WASTEGATE VALVE CONTROL SOLENOID VALVE ..... EF & EC-170
Electrical Components Inspection ..... EF & EC-172

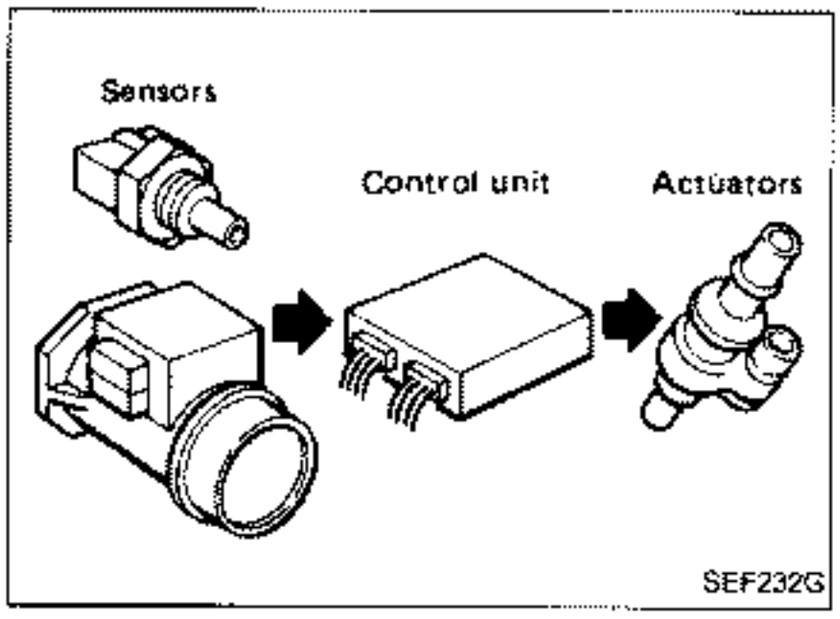

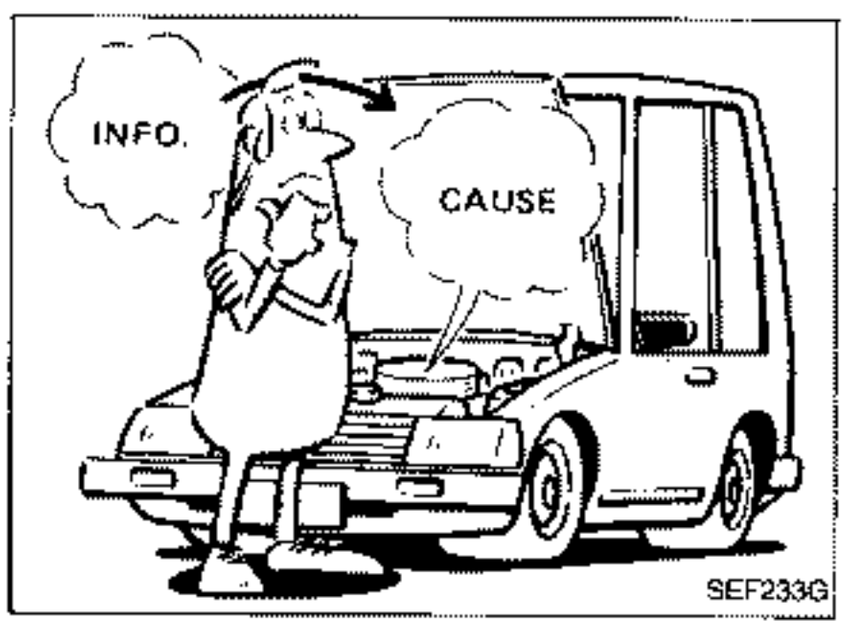

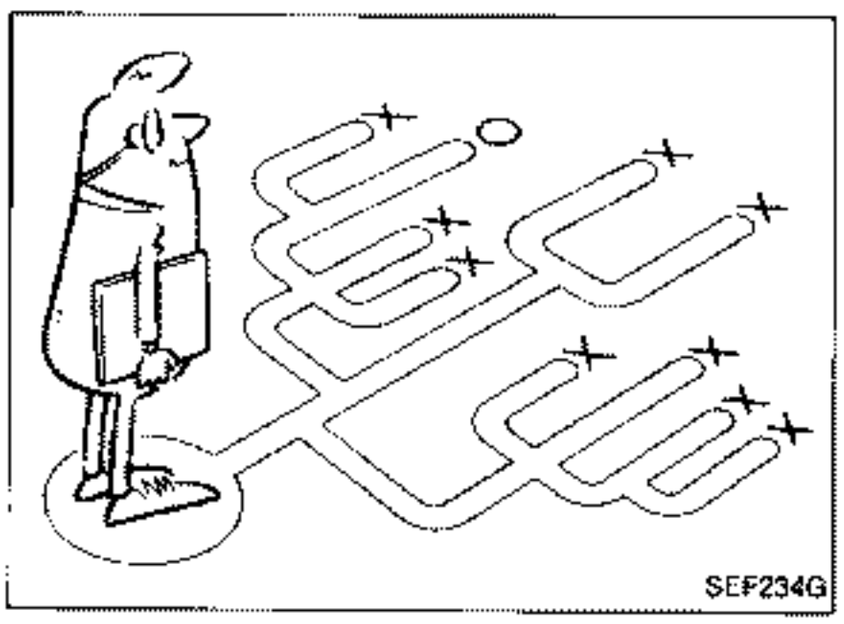

How to Perform Trouble Diagnoses for Quick and Accurate Repair

INTRODUCTION

The engine has an electronic control unit to control major systems such as fuel control, ignition control, idle speed control, etc. The control unit accepts input signals from sensors and instantly drives actuators. It is essential that both kinds of signals are proper and stable. At the same time, it is important that there are no conventional problems such as vacuum leaks, fouled spark plugs, or other problems with the engine.

It is much more difficult to diagnose a problem that occurs intermittently rather than continuously. Most intermittent problems are caused by poor electric connections or improper wiring. In this case, careful checking of suspected circuits may help prevent the replacement of good parts.

A visual check only may not find the cause of the problems, so a road test with a circuit tester connected to a suspected circuit should be performed.

Before undertaking actual checks, take just a few minutes to talk with a customer who approaches with a driveability complaint. The customer is a very good supplier of information on such problems, especially intermittent ones. Through interaction with the customer, find out what symptoms are present and under what conditions they occur.

Start your diagnosis by looking for "conventional" problems first. This is one of the best ways to troubleshoot driveability problems on an electronically controlled engine vehicle.

How to Perform Trouble Diagnoses for Quick and Accurate Repair (Cont'd)

WORK FLOW

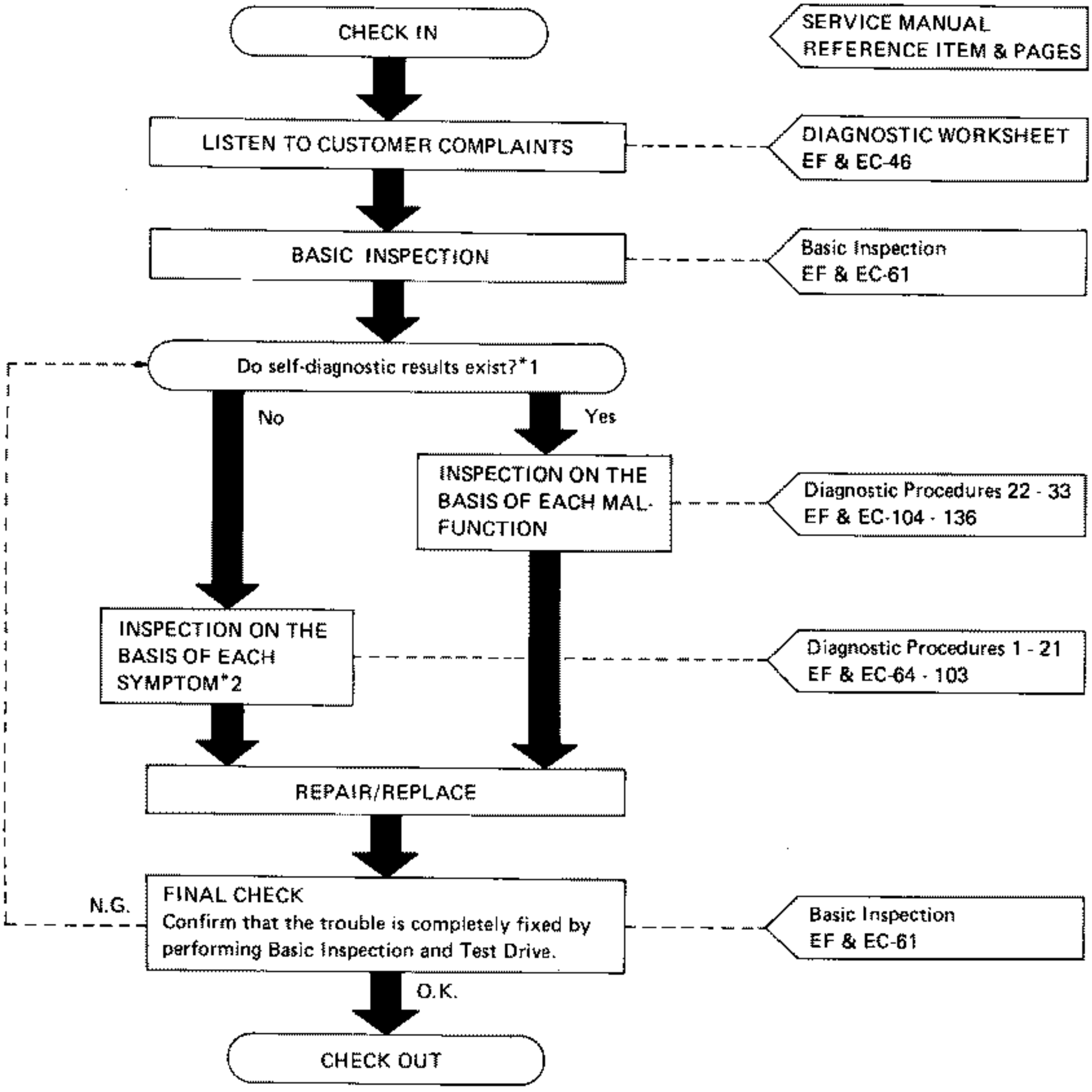

*1: If the self-diagnosis cannot be performed, check main power supply and ground circuit. (See Diagnostic Procedure 22.)
*2: If the trouble is not duplicated, see INTERMITTENT PROBLEM SIMULATION (EF & EC-47).

How to Perform Trouble Diagnoses for Quick and Accurate Repair (Cont'd)

KEY POINTS

WHAT ..... Vehicle & engine model
WHEN ..... Date, Frequencies
WHERE ..... Road conditions
HOW ..... Operating conditions, Weather conditions, Symptoms

DIAGNOSTIC WORKSHEET

There are many kinds of operating conditions that lead to malfunctions on engine components.
A good grasp of such conditions can make trouble-shooting faster and more accurate.
In general, feelings for a problem depend on each customer. It is important to fully understand the symptoms or under what conditions a customer complains.
Make good use of a diagnostic worksheet such as the one shown below in order to utilize all the complaints for trouble-shooting.

Worksheet sample

Customer name MR/MS	Model & Year	VIN
Engine #	Trans.	Mileage
Incident Date	Manuf. Date	In Service Date

Symptoms	☐ Startability	☐ Impossible to start ☐ No combustion ☐ Partial combustion ☐ Partial combustion affected by throttle position ☐ Partial combustion NOT affected by throttle position ☐ Possible but hard to start ☐ Others [ ]
	☐ Idling	☐ No fast idle ☐ Unstable ☐ High idle ☐ Low idle ☐ Others [ ]
	☐ Driveability	☐ Stumble ☐ Surge ☐ Detonation ☐ Lack of power ☐ Intake backfire ☐ Exhaust backfire ☐ Others [ ]
	☐ Engine stall	☐ At the time of start ☐ While idling ☐ While accelerating ☐ While decelerating ☐ Just after stopping ☐ While loading
Incident occurrence		☐ Just after delivery ☐ Recently ☐ In the morning ☐ At night ☐ In the daytime
Frequency		☐ All the time ☐ Under certain conditions ☐ Sometimes
Weather conditions		☐ Not affected
	Weather	☐ Fine ☐ Raining ☐ Snowing ☐ Others [ ]
	Temperature	☐ Hot ☐ Warm ☐ Cool ☐ Cold ☐ Humid °F
Engine conditions		☐ Cold ☐ During warm-up ☐ After warm-up Engine speed 0 2,000 4,000 6,000 8,000 rpm
Road conditions		☐ In town ☐ In suburbs ☐ Highway ☐ Off road (up/down)
Driving conditions		☐ Not affected ☐ At starting ☐ While idling ☐ At racing ☐ While accelerating ☐ While cruising ☐ While decelerating ☐ While turning (RH/LH) Vehicle speed 0 10 20 30 40 50 60 MPH
Check engine light		☐ Turned on ☐ Not turned on

How to Perform Trouble Diagnoses for Quick and Accurate Repair (Cont'd)

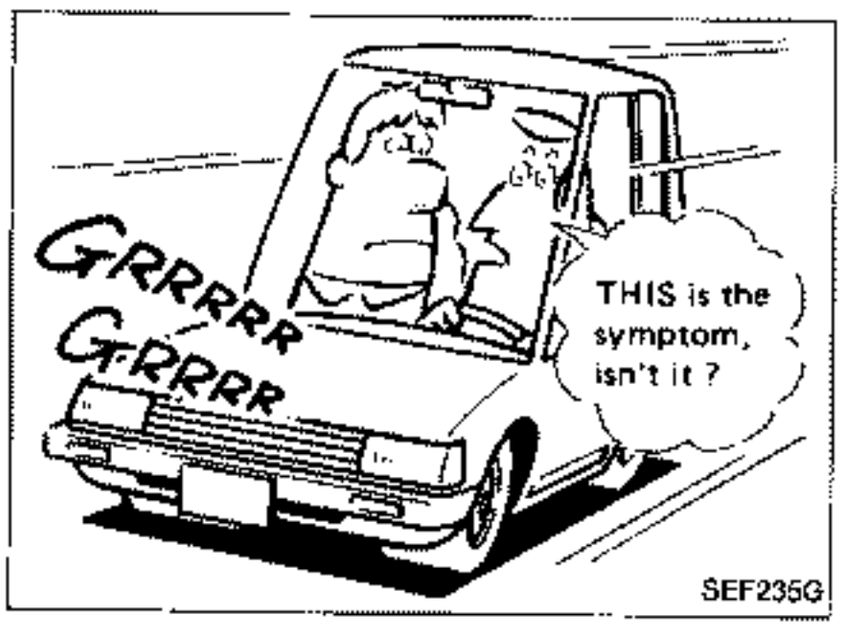

INTERMITTENT PROBLEM SIMULATION

In order to duplicate an intermittent problem, it is effective to create similar conditions for component parts, under which the problem might occur.
Perform the activity listed under Service procedure and note the result.

	Variable factor	Influential part	Target condition	Service procedure
1	Mixture ratio	Pressure regulator	Made lean	Remove vacuum hose and apply vacuum.
			Made rich	Remove vacuum hose and apply pressure.
2	Ignition timing	Crank angle sensor	Advanced	Rotate distributor counterclockwise.
			Retarded	Rotate distributor clockwise.
3	Mixture ratio feedback control	Exhaust gas sensor	Suspended	Disconnect exhaust gas sensor harness connector.
		Control unit	Operation check	Perform self-diagnosis (Mode II) at 2,000 rpm.
4	Idle speed	A.A.C. valve	Raised	Turn idle adjusting screw counterclockwise.
			Lowered	Turn idle adjusting screw clockwise.
5	Electrical connection (Electric continuity)	Harness connectors and wires	Poor electrical connection or improper wiring	Tap or wiggle.
				Race engine rapidly. See if the torque reaction of the engine unit causes electric breaks.
6	Temperature	Control unit	Cooled	Cool with an icing spray or similar device.
			Warmed	Heat with a hair drier. **[WARNING: Do not overheat the unit.]**
7	Moisture	Electric parts	Damp	Wet. **[WARNING: Do not directly pour water on components. Use a mist sprayer.]**
8	Electric loads	Load switches	Loaded	Turn on headlamps, air conditioner, rear defogger, etc.
9	Idle switch condition	Control unit	ON-OFF switching	Rotate throttle sensor body.
10	Ignition spark	Timing light	Spark power check	Try to flash timing light for each cylinder using ignition coil adapter (S.S.T.).

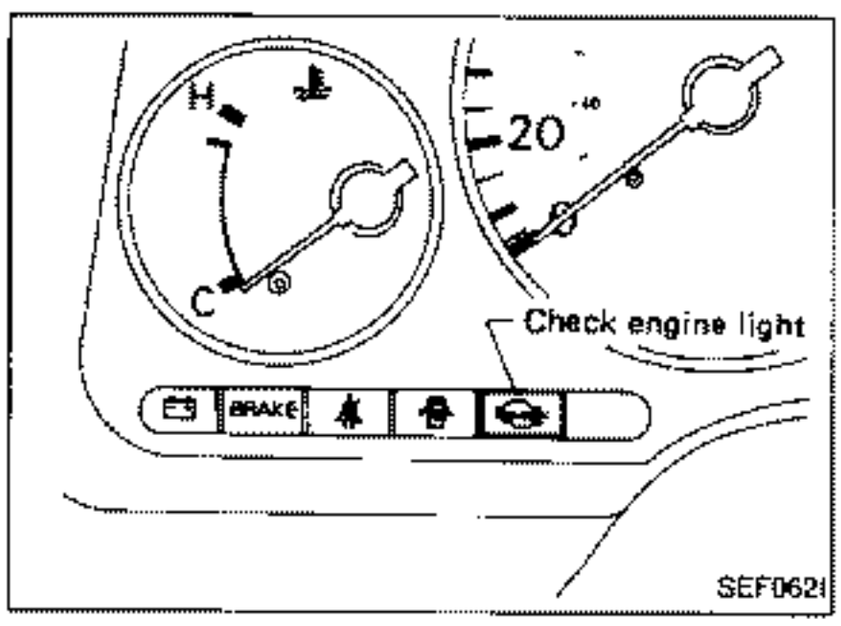

Self-diagnosis

CHECK ENGINE LIGHT

A check engine light has been adopted. This light blinks simultaneously with the RED L.E.D. on the E.C.U.

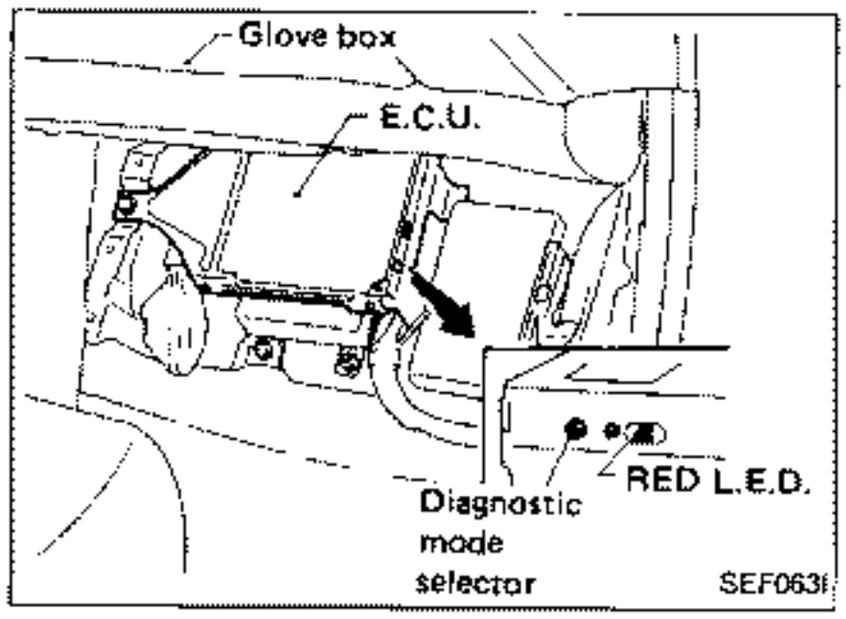

E.C.U. L.E.D.

In the E.C.U., the Green and Red L.E.D.'s have now been permanently changed to one RED L.E.D.

DIAGNOSTIC MODE SELECTOR

The diagnostic mode selector is on the side of the E.C.U.

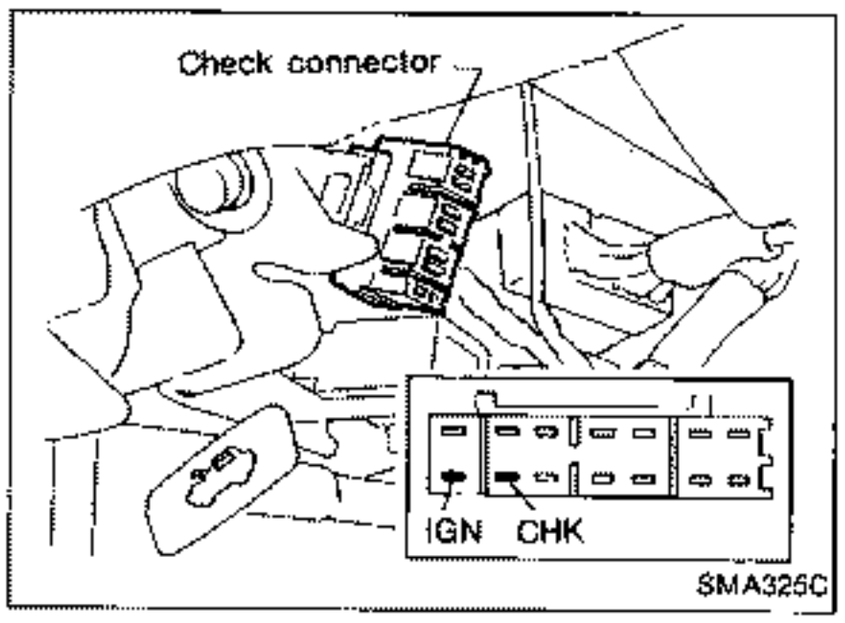

CHECK CONNECTOR

The check connector is under the driver's side dash.

SELF-DIAGNOSTIC FUNCTION

Condition \ Mode		Mode I	Mode II
Ignition switch in "ON" position	Engine stopped	BULB CHECK	SELF-DIAGNOSTIC RESULTS
	Engine running	MALFUNCTION WARNING	EXHAUST GAS SENSOR MONITOR

Self-diagnosis (Cont'd)

HOW TO SWITCH MODES

- Switching the modes is not possible when the engine is running.
- When the ignition switch is turned off during diagnosis in each mode, and then turned back on again after power to the E.C.U. has dropped off completely, the diagnosis will automatically return to Mode I.
- Switching the modes can be done by using either the diagnostic mode selector on the E.C.U. or the check connector.



Turn ignition switch "ON".
(Do not start engine.)

Mode I – BULB CHECK



Start engine.

Mode I – MALFUNCTION WARNING

Check connector

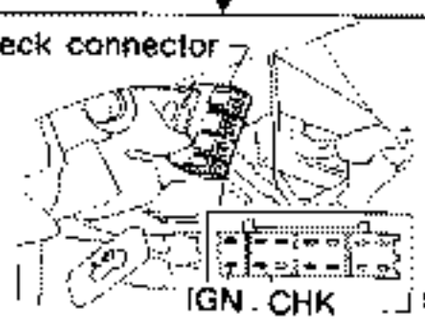

(Short CHC and IGN terminals with a suitable harness.)

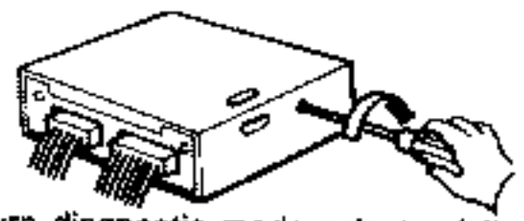

(Turn diagnostic mode selector fully clockwise.)

Wait at least 2 seconds.

Check connector

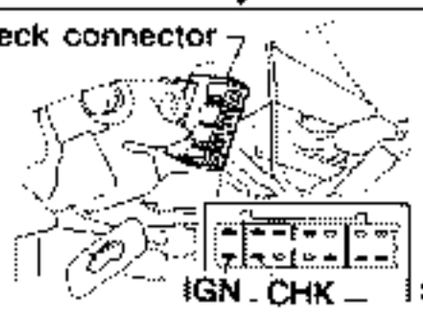

(Disconnect the harness.)

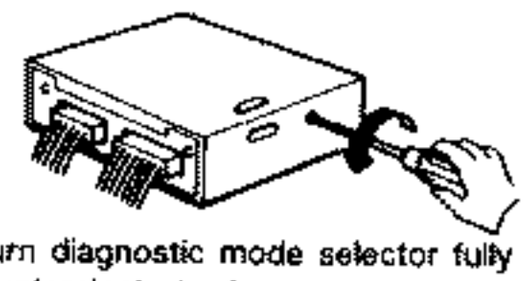

(Turn diagnostic mode selector fully counterclockwise.)

Mode II – SELF-DIAGNOSTIC RESULTS

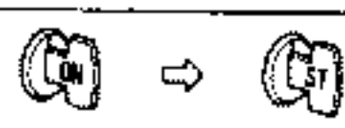

Start engine.

Mode II – EXHAUST GAS SENSOR MONITOR

Check connector

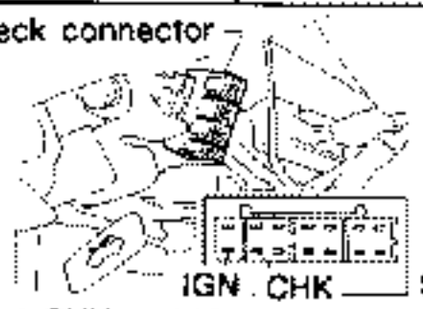

(Short CHK and IGN terminals with a suitable harness.)

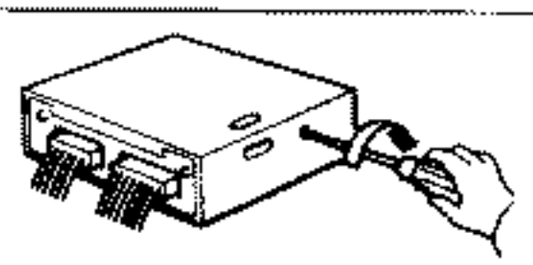

Wait at least 2 seconds.

Check connector

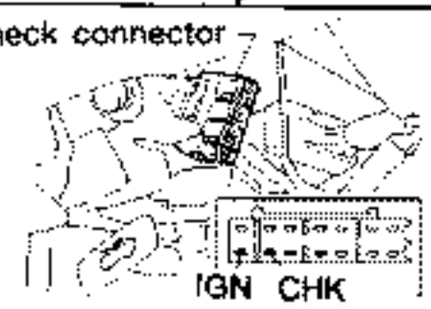

(Disconnect the harness.)

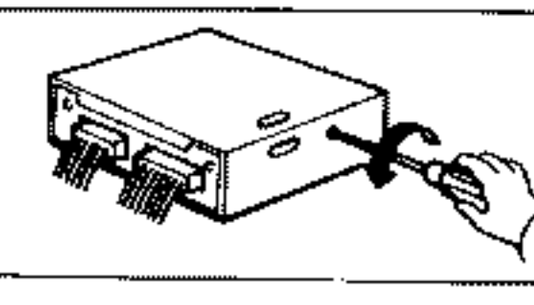

- Turn back diagnostic mode selector to the fully counterclockwise position whenever vehicle is in use.

Self-diagnosis — Mode I

MODE I — BULB CHECK

In this mode, the RED L.E.D. in the E.C.U. and the CHECK ENGINE LIGHT in the instrument panel stay "ON".
If either remain "OFF", check the bulb in the CHECK ENGINE LIGHT or the RED L.E.D.

MODE I — MALFUNCTION WARNING

CHECK ENGINE LIGHT and RED L.E.D.	Condition
ON	When the E.C.U.'s C.P.U. is malfunctioning.
OFF	O.K.

Self-diagnosis — Mode II (Self-diagnostic results)

CAUTION:
The mode selector on the E.C.U. must be returned to the fully counterclockwise position, except when switching the modes.

DESCRIPTION

In this mode, a malfunction code is indicated by the number of flashes from the RED L.E.D. or the CHECK ENGINE LIGHT as shown below:

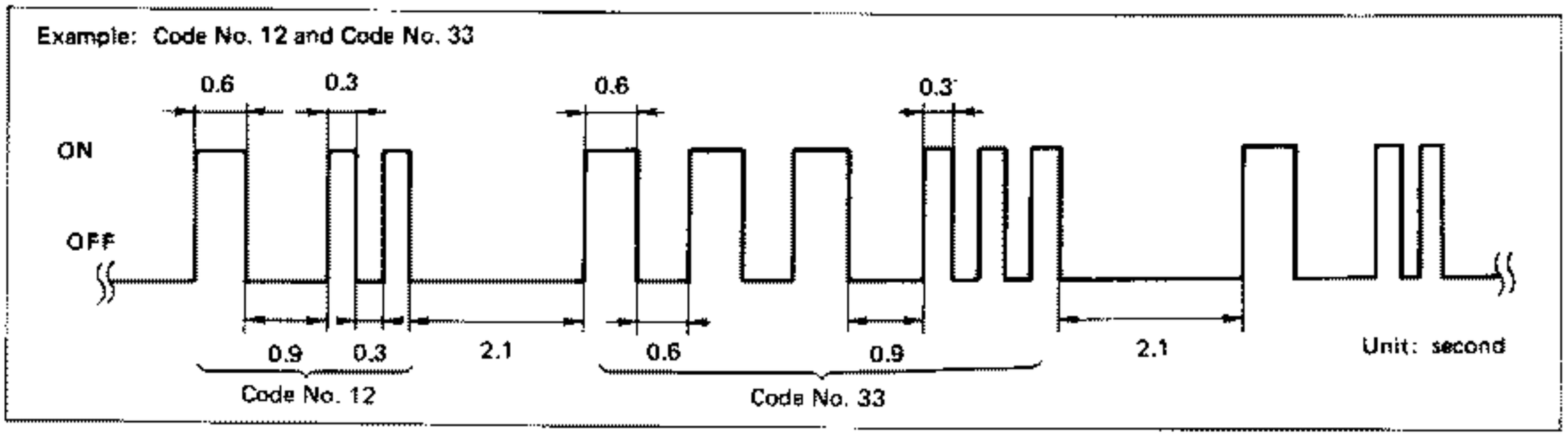

Long (0.6 second) blinking indicates the number of ten digits and short (0.3 second) blinking indicates the number of single digits. For example, the red L.E.D. flashes once for 0.6 seconds and then it flashes twice for 0.3 seconds. This indicates the number "12" and refers to a malfunction in the air flow meter. In this way, all the problems are classified by their code numbers.

Self-diagnosis — Mode II (Self-diagnostic results) (Cont'd)

Display code table

Code No.	Detected items
11	Crank angle sensor circuit
12	Air flow meter circuit
13	Engine temperature sensor circuit
21	Ignition signal circuit
34	Detonation sensor circuit
42	Fuel temperature sensor circuit
43	Throttle sensor circuit
54	Signal circuit from A/T control unit to E.C.U. (A/T only)
55	No malfunction in the above circuits

Code No.	Detected items	Malfunction is detected when ...	Check item (remedy)
*11	Crank angle sensor circuit	• Either 1° or 120° signal is not entered for the first few seconds during engine cranking. • Either 1° or 120° signal is not input often enough while the engine speed is higher than the specified rpm.	• Harness and connector (If harness and connector are normal, replace crank angle sensor.)
12	Air flow meter circuit	• The air flow meter circuit is open or shorted. (An abnormally high or low voltage is entered.)	• Harness and connector (If harness and connector are normal, replace air flow meter.)
13	Engine temperature sensor circuit	• The engine temperature sensor circuit is open or shorted. (An abnormally high or low output voltage is entered.)	• Harness and connector • Engine temperature sensor
*21	Ignition signal circuit	• The ignition signal in the primary circuit is not entered during engine cranking or running.	• Harness and connector • Power transistor unit
34	Detonation sensor circuit	• The detonation circuit is open or shorted. (An abnormally high or low voltage is entered.)	• Harness and connector • Detonation sensor
42	Fuel temperature sensor circuit	• The fuel temperature sensor circuit is open or shorted. (An abnormally high or low voltage is entered.)	• Harness and connector • Fuel temperature sensor
43	Throttle sensor circuit	• The throttle sensor circuit is open or shorted. (An abnormally high or low voltage is entered.)	• Harness and connector • Throttle sensor
54	Signal circuit from A/T control unit to E.C.U. (A/T only)	• The A/T communication line is open or shorted.	• Harness and connector

*: Check items causing a malfunction of crank angle sensor circuit first, if both code No. 11 and 21 are displayed at the same time.

Self-diagnosis — Mode II (Self-diagnostic results) (Cont'd)

RETENTION OF DIAGNOSTIC RESULTS

The diagnostic results will remain in E.C.U. memory until the starter is operated fifty times after a diagnostic item has been judged to be malfunctioning. The diagnostic result will then be cancelled automatically. If a diagnostic item which has been judged to be malfunctioning and stored in memory is again judged to be malfunctioning before the starter is operated fifty times, the second result will replace the previous one. It will be stored in E.C.U. memory until the starter is operated fifty times more.

RETENTION TERM CHART (Example)

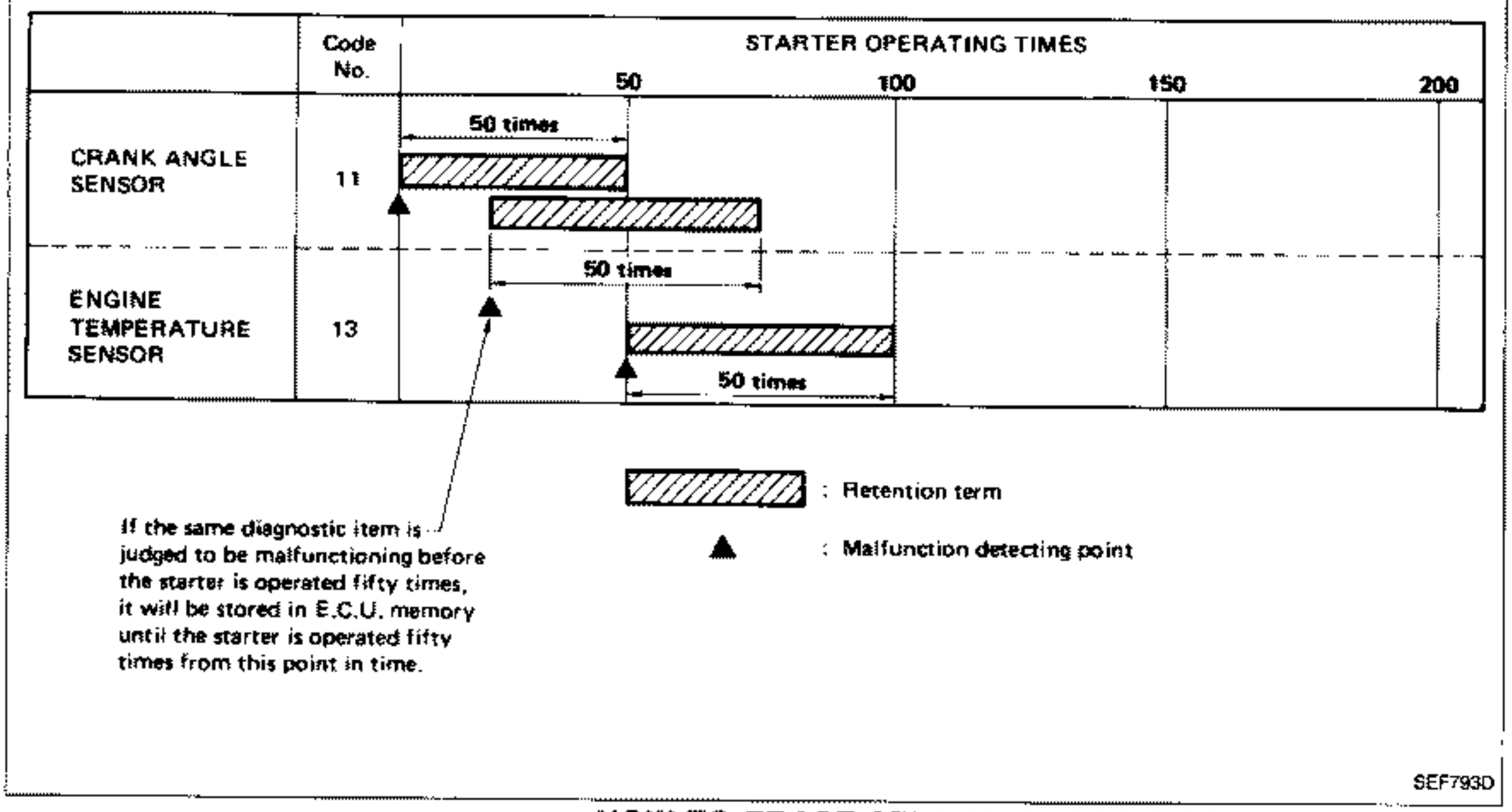

SEF793D

HOW TO ERASE SELF-DIAGNOSTIC RESULTS

The malfunction code is erased from the backup memory on the E.C.U. when the diagnostic mode is changed from Mode II to Mode I. (Refer to "HOW TO SWITCH MODES".)

- **When the battery terminal is disconnected, the malfunction code will be lost from the backup memory within 24 hours.**
- **Before starting self-diagnosis, do not erase the stored memory before beginning self-diagnosis.**

Self-diagnosis — Mode II (Exhaust gas sensor monitor)

DESCRIPTION

In this mode, the CHECK ENGINE LIGHT and RED L.E.D. display the condition of the fuel mixture (lean or rich) which is monitored by the exhaust gas sensor.

CHECK ENGINE LIGHT and RED L.E.D.	Fuel mixture condition in the exhaust gas	Air fuel ratio feedback control condition
ON	Lean	Closed loop control
OFF	Rich	
*Remains ON or OFF	Any condition	Open loop control

*: Maintains conditions just before switching to open loop.

If two exhaust gas sensors (right side and left side) are fitted on the engine, the left side exhaust gas sensor monitor operates first, when selecting this mode.

HOW TO CHANGE MONITOR FROM LEFT SIDE (Right side) TO RIGHT SIDE (Left side)

1. Turn diagnostic mode selector on E.C.U. fully clockwise.
2. Wait at least 2 seconds.
3. Turn diagnostic mode selector on E.C.U. fully counterclockwise.

- These procedures should be carried out when the engine is running.

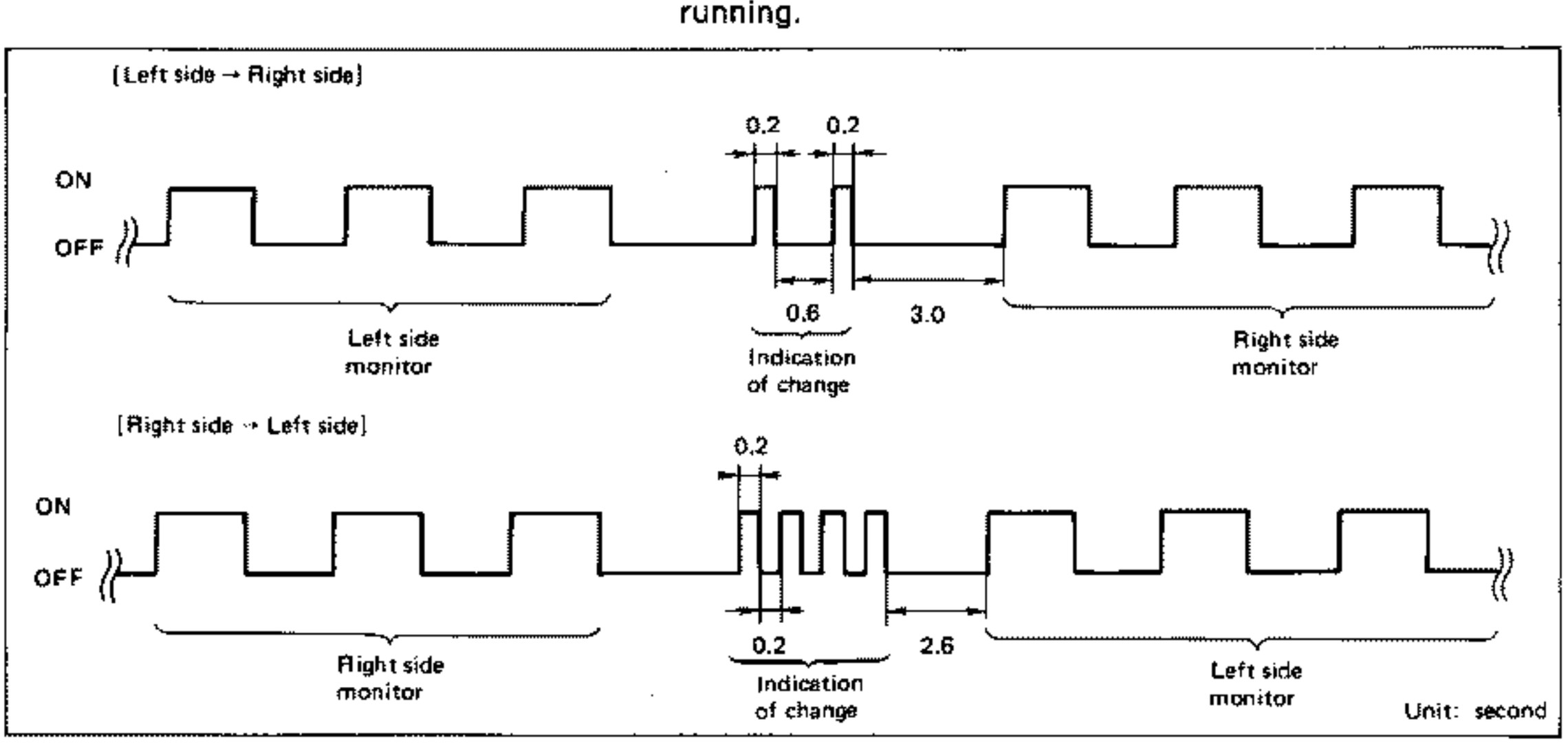

HOW TO CHECK EXHAUST GAS SENSOR

1. Set Mode II. (Refer to "HOW TO SWITCH MODES".)
2. Start engine and warm it up until engine coolant temperature indicator points to the middle of the gauge.
3. Run engine at about 2,000 rpm for about 2 minutes under no-load conditions.
4. Make sure RED L.E.D. or CHECK ENGINE LIGHT goes ON and OFF more than 5 times every 10 seconds; measured at 2,000 rpm under no-load.

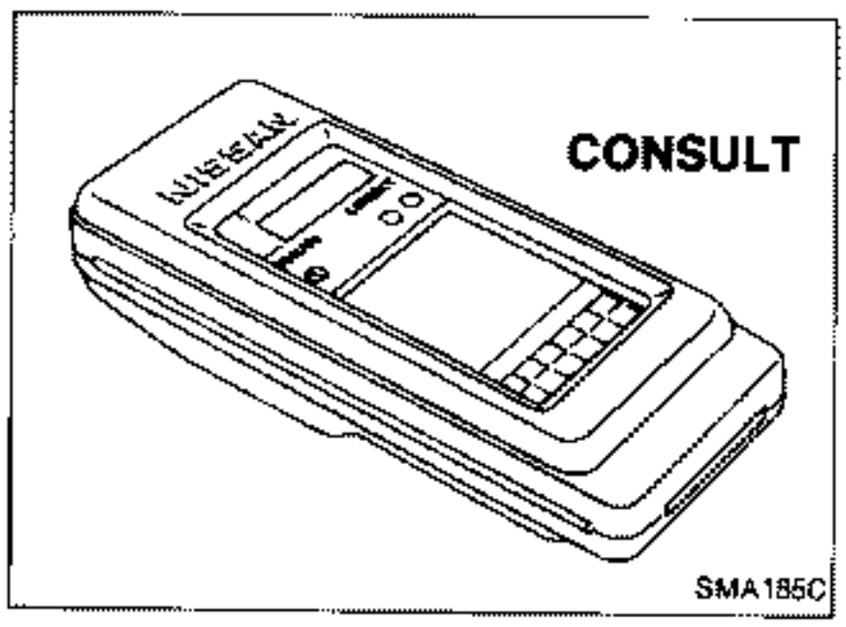

Consult

CONSULT INSPECTION PROCEDURE

1. Turn off ignition switch.
2. Connect "CONSULT" to diagnostic connector.
   (Diagnostic connector is located in left dash side panel.)

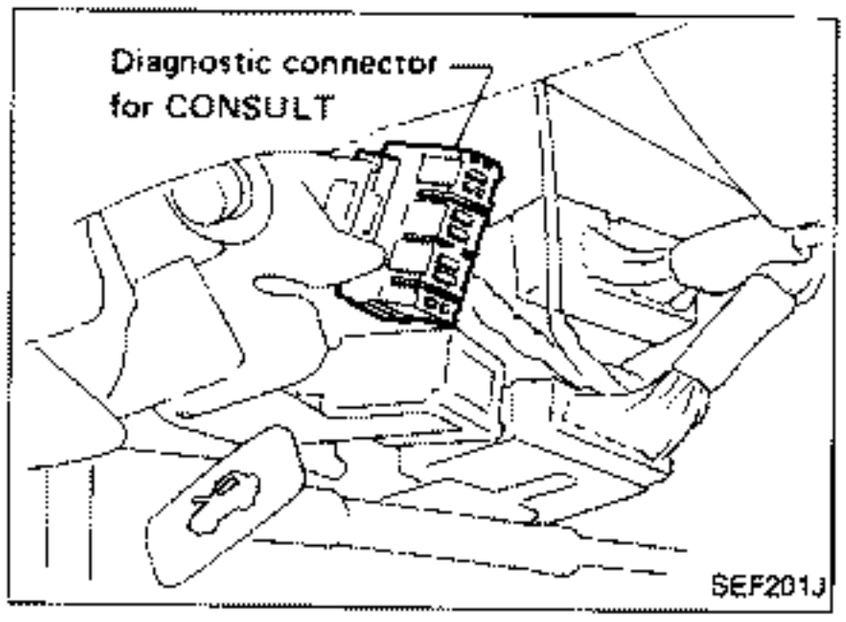

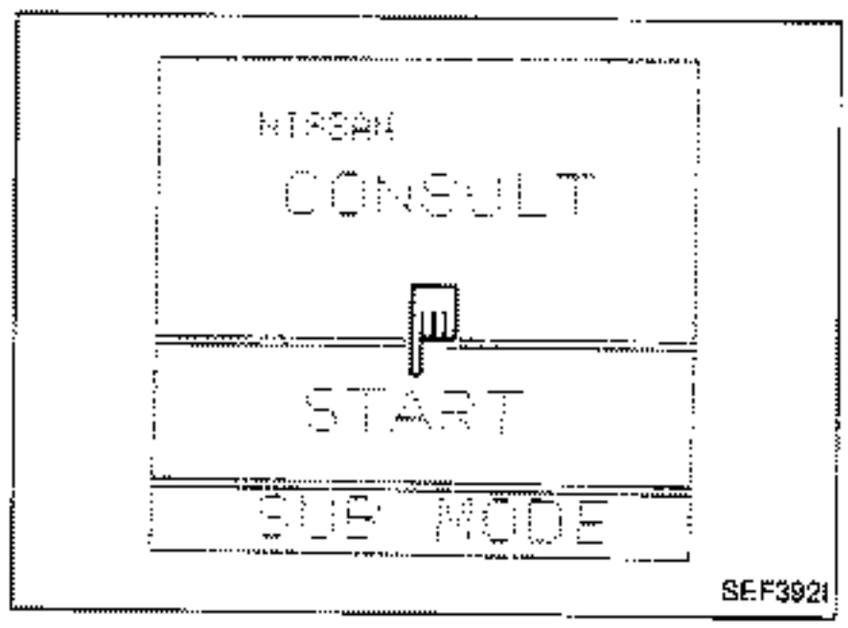

3. Turn on ignition switch.
4. Touch "START".

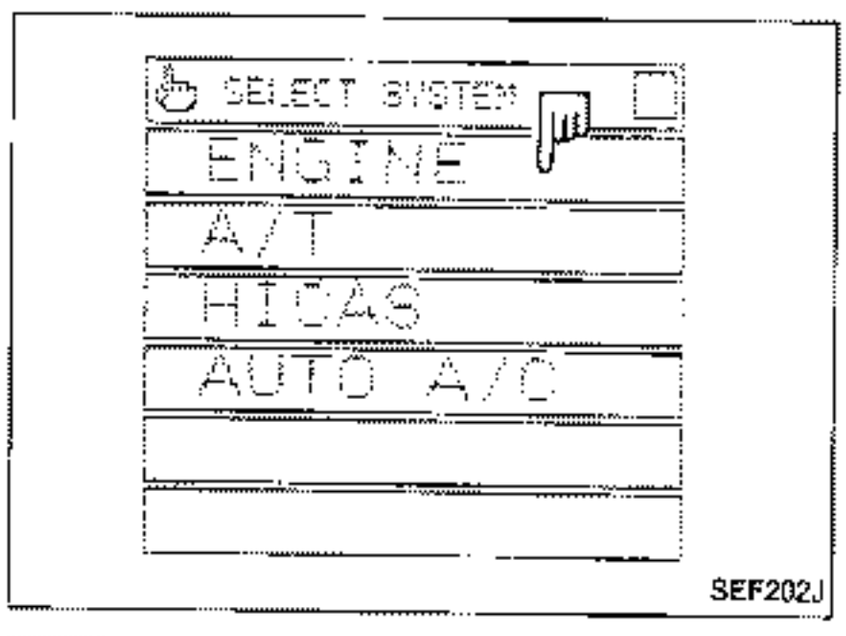

5. Touch "ENGINE".

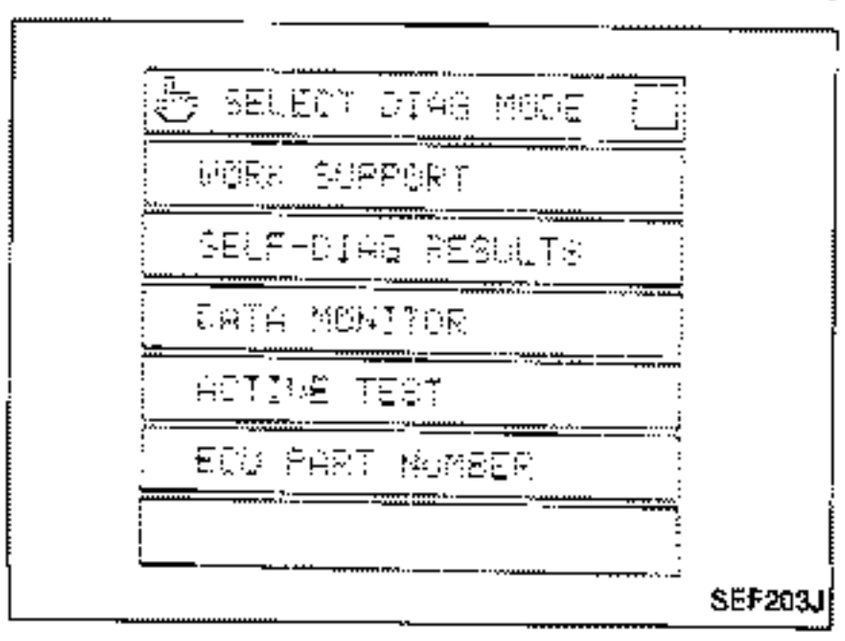

6. Perform each diagnostic mode according to the inspection sheet as follows:

For further information, see the CONSULT Operation Manual.

Consult (Cont'd)

E.C.C.S. COMPONENT PARTS APPLICATION

E.C.C.S. COMPONENT PARTS \ MODE		WORK SUPPORT	SELF- DIAGNOS-TIC RESULTS	DATA MONITOR	ACTIVE TEST
INPUT	Control unit (E.C.U.)		X		
	Crank angle sensor		X	X	
	Air flow meter		X	X	
	Engine temperature sensor		X	X	X
	Exhaust gas sensors		X*	X	
	Vehicle speed sensor		X*	X	
	Throttle sensor	X	X	X	
	Fuel temperature sensor		X	X	
	Defonation sensor		X		
	Ignition switch (start signal)			X	
	Air conditioner switch			X	
	Neutral switch			X	
	Power steering oil pressure switch			X	
	Battery			X	
	A/T signal		X	X	
*	Exhaust gas temperature sensor		X*	X*	
OUTPUT	Injectors		X*	X	X
	Power transistors (ignition signal)	X (Ignition timing)	X	X (Ignition timing)	X
	A.A.C. valve	X		X	X
	F.I.C.D. solenoid valve			X	X
	Valve timing control solenoid valve			X	X
	A.I.V. control solenoid valve			X	X
	P.R.V.R. control solenoid valve		X*		X
	E.G.R. control solenoid valve			X	X
	Wastegate valve control solenoid valves			X	
	Air conditioner relay			X	
	Fuel pump relay	X		X	X
	Radiator fan			X	X

X: Applicable *: U.S.A. model

Consult (Cont'd)

FUNCTION

Diagnostic mode	Function
Work support	This mode enables a technician to adjust some devices faster and more accurately by following the indications on the CONSULT unit.
Self-diagnostic results	Self-diagnostic results can be read and erased quickly.
Data monitor	Input/Output data in the control unit can be read.
Active test	Mode in which CONSULT drives some actuators apart from the control units and also shifts some parameters in a specified range.
E.C.U. part numbers	E.C.U. part number can be read.

WORK SUPPORT MODE

WORK ITEM	CONDITION	USAGE
THROTTLE SENSOR ADJUSTMENT	CHECK THE THROTTLE SENSOR SIGNAL. ADJUST IT TO THE SPECIFIED VALUE BY ROTATING THE SENSOR BODY UNDER THE FOLLOWING CONDITIONS. • IGN SW "ON" • ENG NOT RUNNING • ACC PEDAL NOT PRESSED	When adjusting throttle sensor initial position.
IGNITION TIMING ADJUSTMENT*	• IGNITION TIMING FEEDBACK CONTROL WILL BE HELD BY TOUCHING "START". AFTER DOING SO, ADJUST IGNITION TIMING WITH A TIMING LIGHT BY TURNING THE CRANK ANGLE SENSOR.	When adjusting initial ignition timing.
AAC VALVE ADJUSTMENT	SET ENGINE RPM AT THE SPECIFIED VALUE UNDER THE FOLLOWING CONDITIONS. • ENGINE WARMED UP • NO-LOAD	When adjusting idle speed.
FUEL PRESSURE RELEASE	• FUEL PUMP WILL STOP BY TOUCHING "START" DURING IDLING. CRANK A FEW TIMES AFTER ENGINE STALLS.	When releasing fuel pressure from fuel line.

*: The ignition timing feedback control is not adopted on model 300ZX, so it is not necessary to perform IGNITION TIMING ADJUSTMENT.

Consult (Cont'd)

SELF-DIAGNOSTIC RESULTS MODE

DIAGNOSTIC ITEM	DIAGNOSTIC ITEM IS DETECTED WHEN ...	CHECK ITEM (REMEDY)
CRANK ANGLE SENSOR*	• Either 1° or 120° signal is not entered for the first few seconds during engine cranking. • Either 1° or 120° signal is not input often enough while the engine speed is higher than the specified rpm.	• Harness and connector (If harness and connector are normal, replace crank angle sensor.)
AIR FLOW METER	• The air flow meter circuit is open or shorted. (An abnormally high or low voltage is entered.)	• Harness and connector (If harness and connector are normal, replace air flow meter.)
ENGINE TEMP SENSOR	• The engine temperature sensor circuit is open or shorted. (An abnormally high or low output voltage is entered.)	• Harness and connector • Engine temperature sensor
IGN SIGNAL-PRIMARY*	• The ignition signal in primary circuit is not entered during engine cranking or running.	• Harness and connector • Power transistor unit
CONTROL UNIT	• E.C.U. calculation function is malfunctioning.	(Replace E.C.C.S. control unit.)
DETONATION SENSOR	• The detonation circuit is open or shorted. (An abnormally high or low voltage is entered.)	• Harness and connector • Detonation sensor
FUEL TEMP SENSOR	• The fuel temperature sensor circuit is open or shorted. (An abnormally high or low voltage is entered.)	• Harness and connector • Fuel temperature sensor
THROTTLE SENSOR	• The throttle sensor circuit is open or shorted. (An abnormally high or low voltage is entered.)	• Harness and connector • Throttle sensor
A/T COMM LINE	• The A/T communication line is open or shorted.	• Harness and connector

*: Check items causing a malfunction of crank angle sensor circuit first, if both "CRANK ANGLE SENSOR" and "IGN SIGNAL—PRIMARY" are displayed at the same time.

Consult (Cont'd)

DATA MONITOR MODE

Remarks; • The monitor item marked "**" is applicable to vehicles for the U.S.A. only.
- Specification data are reference values.
- Specification data are output/input values which are detected or supplied by E.C.U. at the connector.
  * Specification data may not be directly related to their components signals/values/operations.
  ie. Adjust ignition timing with a timing light before monitoring IGN TIMING, because the monitor may show the specification data in spite of the ignition timing being not adjusted to the specification data. This IGN TIMING monitors the calculated data by E.C.U. according to the input signals from crank angle sensor and other ignition timing related sensors.

MONITOR ITEM	CONDITION		SPECIFICATION		CHECK ITEM WHEN OUTSIDE SPEC.
			Non-turbo	Turbo	
CAS-RPM (POS) CAS-RPM (REF)	• Tachometer: Connect • Run engine and compare tachometer indication with the CONSULT value.		Almost the same speed as the CONSULT value.		• Harness and connector • Crank angle sensor
AIR FLOW MTR	• Engine: After warming up, idle the engine • A/C switch "OFF" • Shift lever "N" • No-load	Idle	0.8 - 1.5V	0.9 - 1.4V	• Harness and connector • Air flow meter
		2,000 rpm	1.4 - 1.8V	1.4 - 1.8V	
ENG TEMP SEN	• Engine: After warming up		More than 70°C (158°F)		• Harness and connector • Engine temperature sensor
EXH GAS SEN EXH GAS SEN-R M/R F/C MNT M/R F/C MNT-R	• Engine: After warming up	Maintaining engine speed at 2,000 rpm	0 - 0.3V ↔ 0.6 - 1.0V		• Harness and connector • Exhaust gas sensor • Intake air leaks • Injectors
			LEAN ↔ RICH Changes more than 5 times during 10 seconds.		
CAR SPEED SEN	• Turn drive wheels and compare speedometer indication with the CONSULT value		Almost the same speed as the CONSULT value		• Harness and connector • Vehicle speed sensor
BATTERY VOLT	• Ignition switch: ON (Engine stopped)		11 - 14V		• Battery • E.C.U. power supply circuit
THROTTLE SEN	• Ignition switch: ON (Engine stopped)	Throttle valve fully closed	0.4 - 0.5V		• Harness and connector • Throttle sensor • Throttle sensor adjustment
		Throttle valve fully opened	Approx. 4.0V		
FUEL TEMP SEN	• Engine: After warming up		20 - 60°C (68 - 140°F)		• Harness and connector • Fuel temp. sensor
START SIGNAL	• Ignition switch: ON → START		OFF → ON		• Harness and connector • Starter switch
IDLE POSITION	• Ignition switch: ON (Engine stopped)	Throttle valve: Idle position	ON		• Harness and connector • Throttle sensor • Throttle sensor adjustment
		Throttle valve: Slightly open	OFF		

Consult (Cont'd)

MONITOR ITEM	CONDITION		SPECIFICATION		CHECK ITEM WHEN OUTSIDE SPEC.
			Non-turbo	Turbo	
AIR COND SIG	• Engine: After warming up, idle the engine	A/C switch "OFF"	OFF		• Harness and connector • Air conditioner switch
		A/C switch "ON"	ON		
NEUTRAL SW	• Ignition switch: ON	Shift lever "P" or "N"	ON		• Harness and connector • Neutral switch
		Except above	OFF		
PW/ST SIGNAL	• Engine: After warming up, idle the engine	Steering wheel in neutral (forward direction)	OFF		• Harness and connector • Power steering oil pressure switch
		The steering wheel is turned	ON		
INJ PULSE	• Engine: After warming up • A/C switch "OFF" • Shift lever "N" • No-load	Idle	2.0 - 3.0 msec.	1.8 - 2.5 msec.	• Harness and connector • Injector • Air flow meter • Intake air system
INJ PULSE-R		2,000 rpm	2.0 - 3.0 msec.	1.8 - 2.2 msec.	
IGN TIMING	ditto	Idle	15° B.T.D.C.	15° B.T.D.C.	• Harness and connector • Crank angle sensor
		2,000 rpm	More than 25° B.T.D.C.	More than 25° B.T.D.C.	
AAC VALVE	ditto	Idle	15 - 40%	15 - 35%	• Harness and connector • A.A.C. valve
		2,000 rpm	—	—	
EGR TEMP SEN**	• Engine: After warming up		Less than 4.5V		• Harness and connector • Exhaust gas temperature sensor

Consult (Cont'd)

ACTIVE TEST MODE

TEST ITEM	CONDITION	JUDGMENT	CHECK ITEM (REMEDY)
FUEL INJECTION TEST	• Engine: Return to the original trouble condition • Change the amount of fuel injection with the CONSULT.	If trouble symptom disappears, see CHECK ITEM.	• Harness and connector • Fuel injectors • Exhaust gas sensor
AAC/V OPENING TEST	• Engine: After warming up, idle the engine. • Change the AAC valve opening percent with the CONSULT.	Engine speed changes according to the opening percent.	• Harness and connector • AAC valve
ENGINE TEMP TEST	• Engine: Return to the original trouble condition • Change the engine coolant temperature with the CONSULT.	If trouble symptom disappears, see CHECK ITEM.	• Harness and connector • Engine temperature sensor • Fuel injectors
IGN TIMING TEST	• Engine: Return to the original trouble condition • Timing light: Set • Retard the ignition timing with the CONSULT.	If trouble symptom disappears, see CHECK ITEM.	• Adjust initial ignition timing
POWER BALANCE TEST	• Engine: After warming up, idle the engine. • A/C switch "OFF" • Shift lever "N" • Cut off each injector signal one at a time with the CONSULT.	Engine runs rough or dies.	• Harness and connector • Compression • Injectors • Power transistor • Spark plugs • Ignition coils
RADIATOR FAN TEST	• Ignition switch: ON • Turn the radiator fan "ON" and "OFF" with the CONSULT.	Radiator fan moves and stops.	• Harness and connector • Radiator fan motor
FICD SOL/V TEST	• Engine: After warming up, idle the engine. • A/C switch "OFF" • Shift lever "N" • Turn the FICD solenoid valve "ON" with the CONSULT.	Engine speed will increase momentarily by approx. 200 rpm.	• Harness and connector • FICD solenoid valve
FUEL PUMP RLY TEST	• Ignition switch: ON (Engine stopped) • Turn the fuel pump relay "ON" and "OFF" with the CONSULT and listen to operating sound.	Fuel pump relay makes the operating sound.	• Harness and connector • Fuel pump relay
EGR CONT SOL/V TEST	• Ignition switch: ON • Turn solenoid valve "ON" and "OFF" with the CONSULT and listen to operating sound.	Each solenoid valve makes an operating sound.	• Harness and connector • Solenoid valve
PRVR CONT SOL/V TEST			
AIV CONT SOL/V TEST			
VALVE TIM SOL TEST			
SELF-LEARN CONT TEST	• In this test, the coefficient of self-learning control mixture ratio returns to the original coefficient by touching "CLEAR" on the screen.		

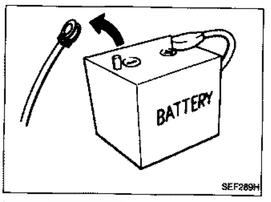

SEF289H

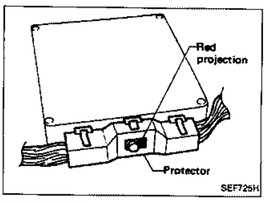

SEF725H

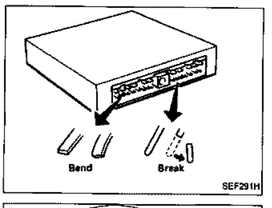

SEF291H

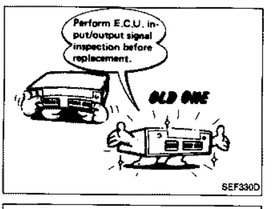

SEF330D

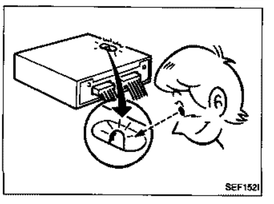
SEF152I

Diagnostic Procedure

CAUTION:

1. **Before connecting or disconnecting the E.C.U. harness connector to or from any E.C.U., be sure to turn the ignition switch to the "OFF" position and disconnect the negative battery terminal in order not to damage E.C.U. as battery voltage is applied to E.C.U. even if ignition switch is turned off. Failure to do so may damage the E.C.U.**
2. **When connecting E.C.U. harness connector, tighten securing bolt until red projection is in line with connector face.**
3. **When connecting or disconnecting pin connectors into or from E.C.U., take care not to damage pin terminals (bend or break).**
4. **Make sure that there are not any bends or breaks on E.C.U. pin terminal, when connecting pin connectors.**
5. **Before replacing E.C.U., perform E.C.U. input/output signal inspection and make sure whether E.C.U. functions properly or not. (See page EF & EC-174.)**
6. **After performing this "Diagnostic Procedure", perform E.C.C.S. self-diagnosis and driving test.**

Diagnostic Procedure (Cont'd)

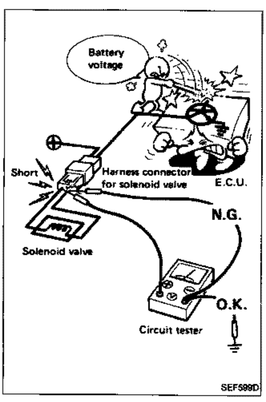

SEF599D

7.When measuring E.C.U. controlled components supply voltage with a circuit tester, separate one tester probe from the other.
If the two tester probes accidentally make contact with each other during measurement, the circuit will be shorted, resulting in damage to the control unit power transistor.

Basic Inspection

1

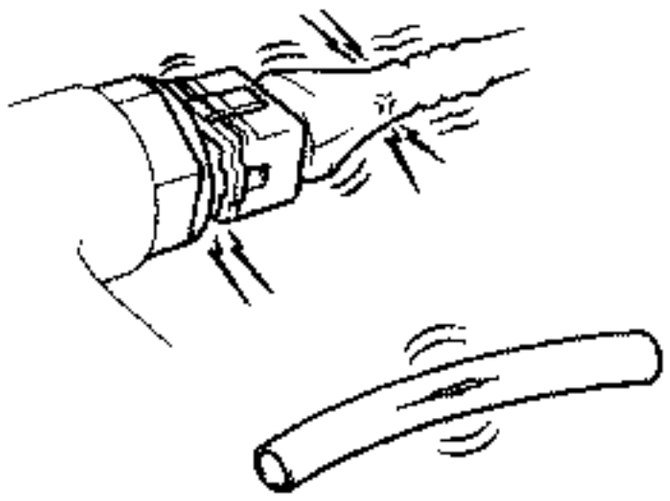

SEF142I

BEFORE STARTING

1. Check service records for any recent repairs that may indicate a related problem, or the current need for scheduled maintenance.
2. Open engine hood and check the following:

- Harness connectors for proper connections
- Vacuum hoses for splits, kinks, and proper connections
- Wiring for proper connections, pinches, and cuts

2

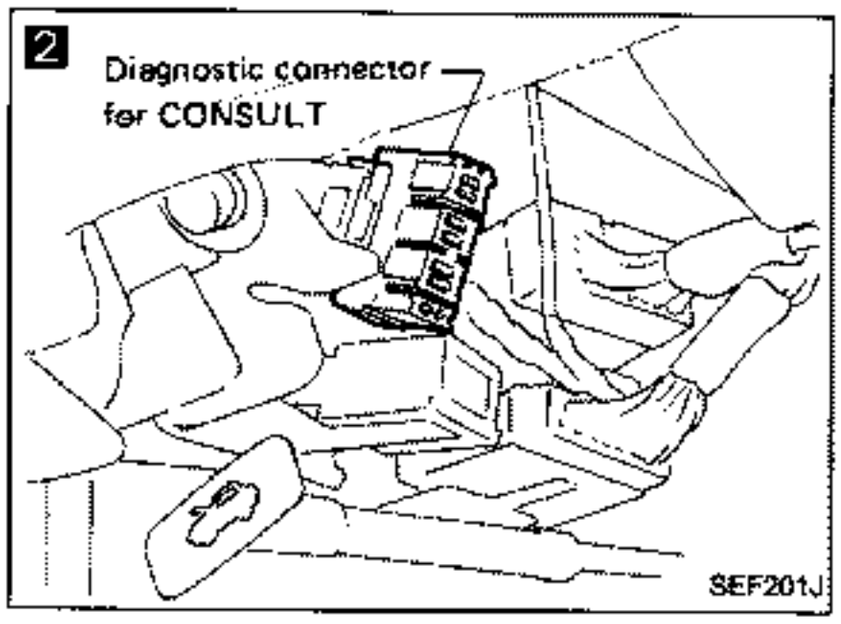

SEF201J

CONNECT CONSULT TO THE VEHICLE

Connect "CONSULT" to the diagnostic connector and select "ENGINE" from the menu. (Refer to page EF & EC-54.)

3

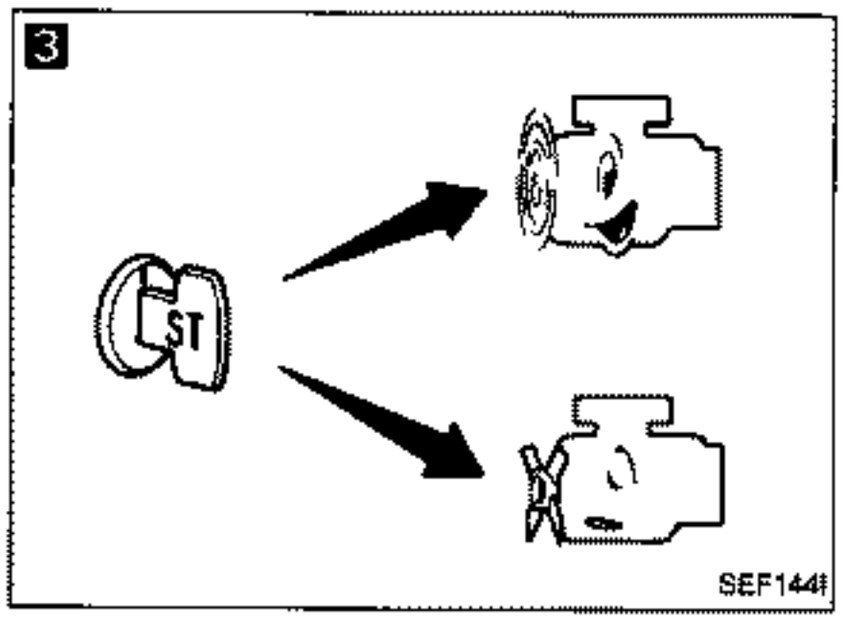

SEF144I

DOES ENGINE START?

No → Go to 6.

Yes

4

CHECK IGNITION TIMING.

Warm up engine sufficiently and check ignition timing at idle using timing light. (Refer to page EF & EC-35.)

Ignition timing:

15° ± 2° B.T.D.C.

N.G. → Adjust ignition timing by turning crank angle sensor.

O.K.

(Go to Ⓐ on next page.)

4

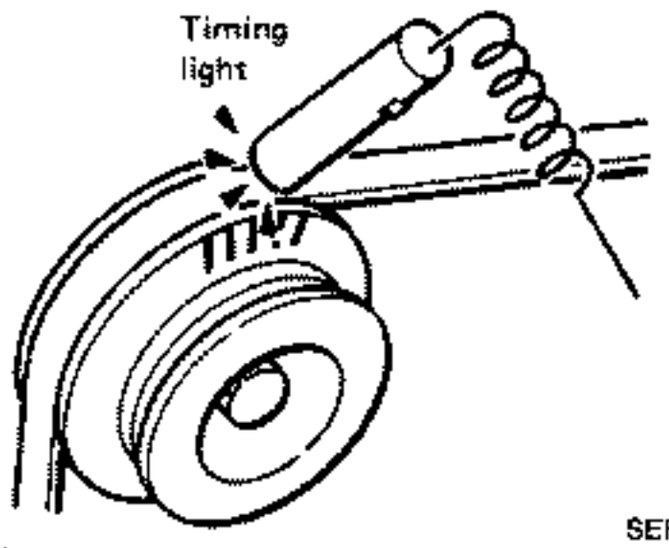

SEF284G

Basic Inspection (Cont'd)

5

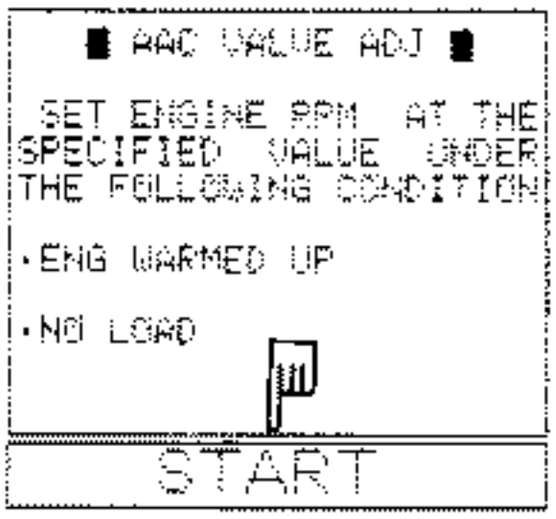

SEF372I

5

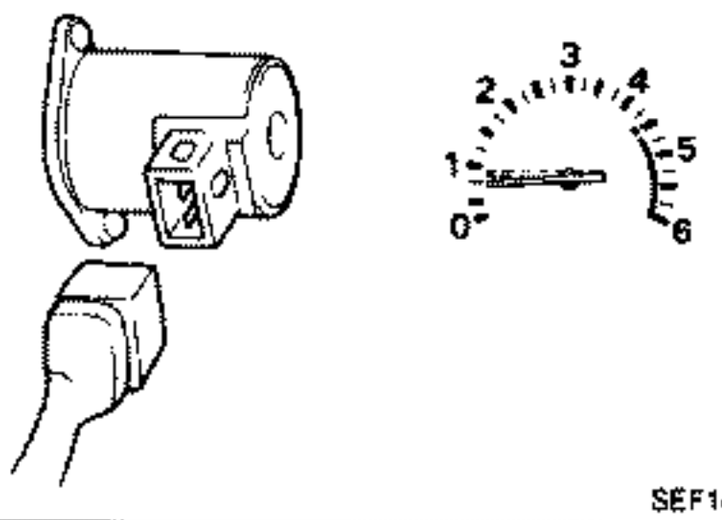

SEF146I

Ⓐ

5

CHECK IDLE ADJ. SCREW INITIAL SET RPM.

1. Select "A.A.C. VALVE ADJ" in "WORK SUPPORT" mode.
2. When touching "START", does engine rpm fall to;

	A/T*	M/T
Non-turbo	720±50 rpm	650±50 rpm
Turbo	700±50 rpm	

*: in "N" position

OR

When disconnecting A.A.C. valve harness connector, does engine rpm fall to;

	A/T*	M/T
Non-turbo	720±50 rpm	650±50 rpm
Turbo	700±50 rpm	

*: in "N" position

No → Adjust engine rpm by turning idle adjusting screw.

Yes

6

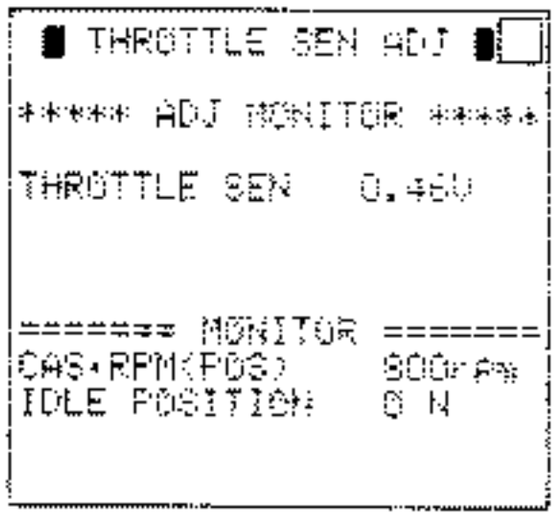

SEF147I

6

CHECK THROTTLE SENSOR IDLE POSITION.

1. Perform "THROTTLE SEN. ADJ." in "WORK SUPPORT" mode.
2. Check that output voltage of throttle sensor is 0.4 to 0.5V. (Throttle valve fully closes.) and "IDLE POSITION" stays "ON".

OR

Measure output voltage of throttle sensor using voltmeter, and check that it is 0.4 to 0.5V. (Throttle valve fully closed.)

N.G. →
1. Adjust output voltage by rotating throttle sensor body.
2. Disconnect throttle sensor harness connector for a few seconds and then reconnect it.
3. Confirm that "IDLE POSITION" stays "ON".

O.K.

(Go to Ⓑ on next page.)

6

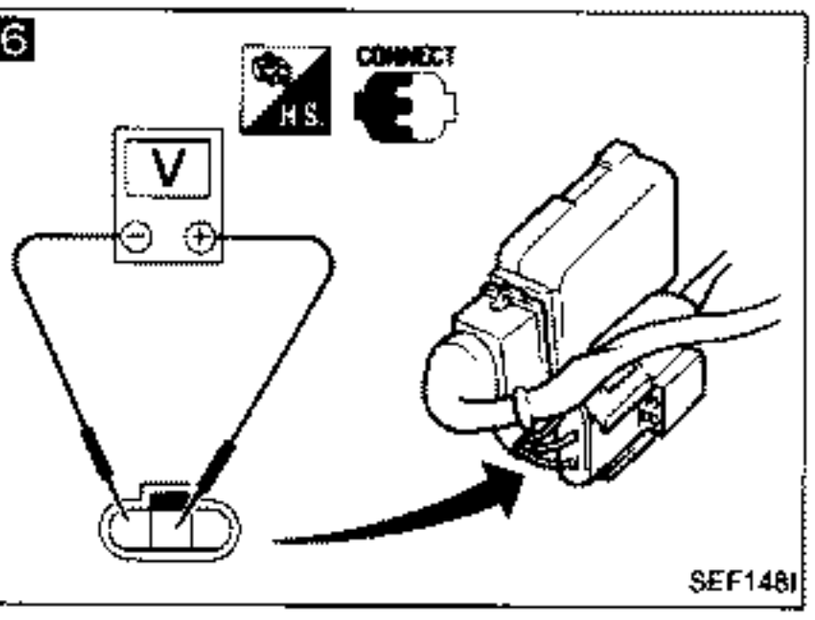

SEF148I

Basic Inspection (Cont'd)

7

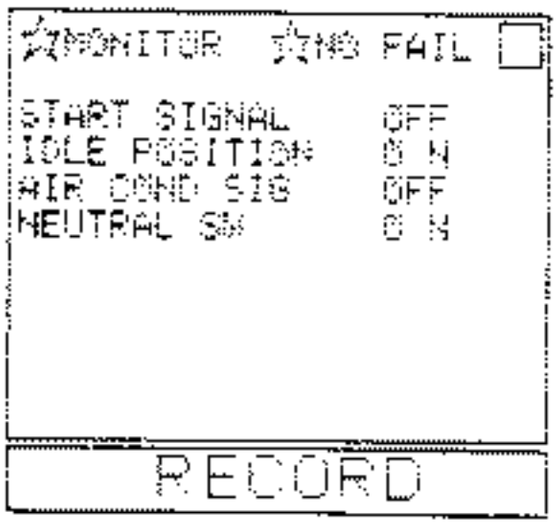

SEF149I

Ⓑ

7

CHECK SWITCH INPUT SIGNAL.

Select the following switches in "DATA MONITOR" mode,
a) Start signal,
b) Idle position,
c) Air conditioner signal,
d) Neutral (Parking) switch,
and check the switches' ON-OFF operation.

N.G. → Repair or replace the malfunctioning switch or its circuit.

OR

Remove E.C.U. from front floor panel and check the above switches' ON-OFF operation using voltmeter at each E.C.U. terminal.

Switch	Condition	Voltage (V)
Start signal	IGN ON → IGN START	0 → Battery voltage
Idle position	—	—
A/C signal	A/C OFF → A/C ON (Engine running)	Battery voltage → 0.5 - 0.7
Neutral (Parking) switch	Shift lever is "N" or "P" position → Except "N" and "P"	0 → 8.0 - 9.0

7

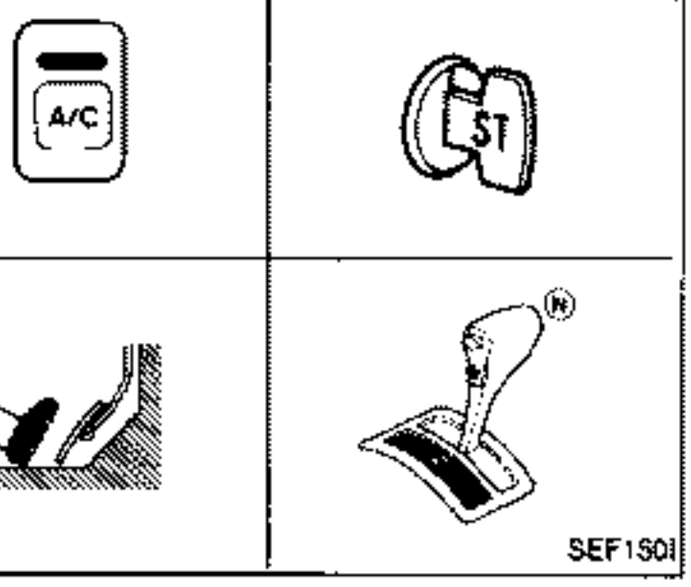

SEF150I

O.K.

8

READ SELF-DIAGNOSTIC RESULTS.

1. Perform "SELF-DIAG RESULTS" mode.
2. Read out self-diagnostic results.
3. Is a failure detected?

Yes → Go to the relevant inspection procedure.

OR

1. Set "Self-diagnostic results mode" in Mode II. (Refer to page EF & EC-49.)
2. Count the number of check engine light flashes and read out the codes.
3. Are the codes being output?

No → INSPECTION END

8

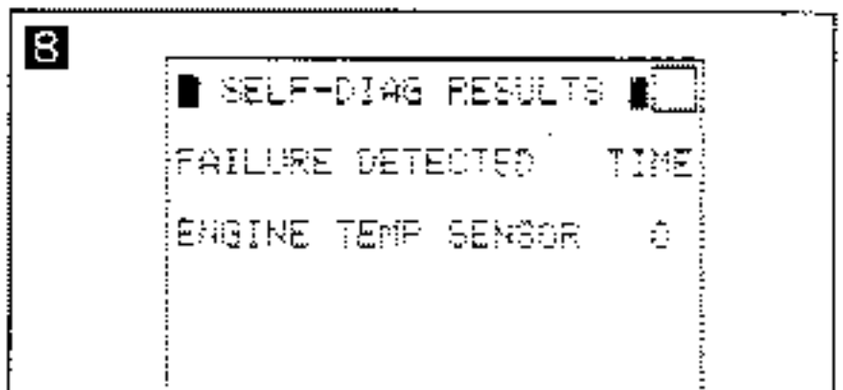

SEF151I

8

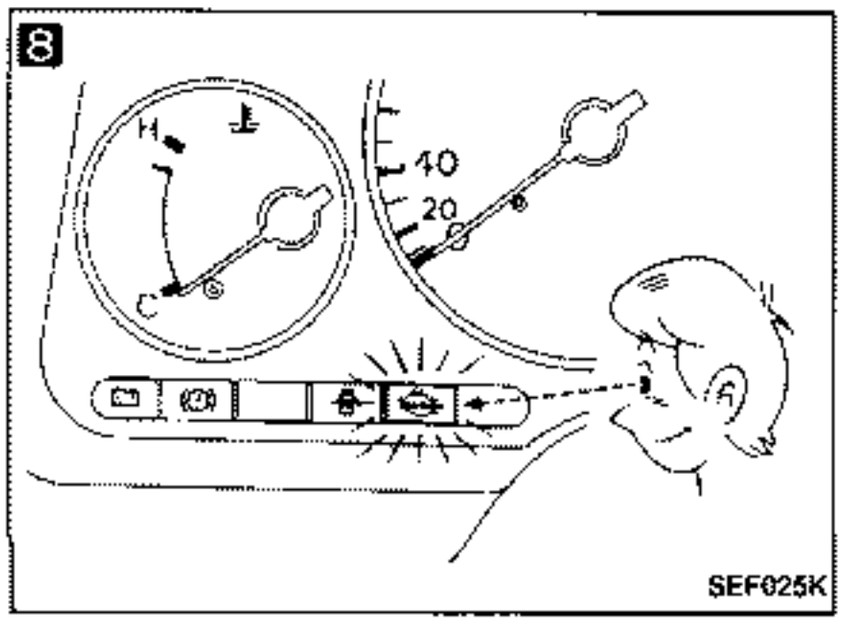

SEF025K

Diagnostic Procedure 1 — High Idling after Warm-up

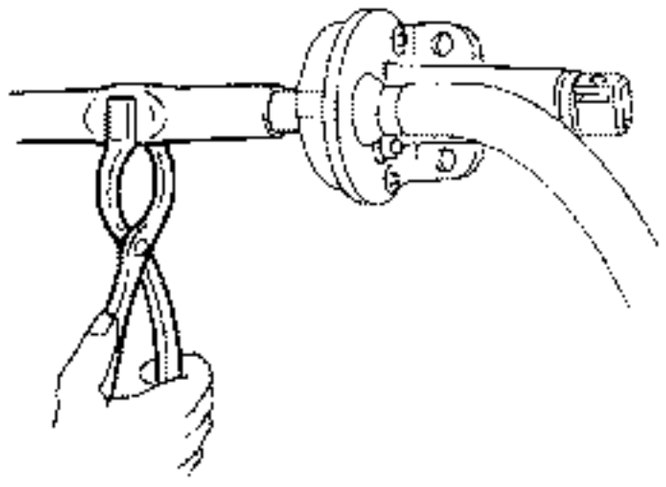
SEF021K

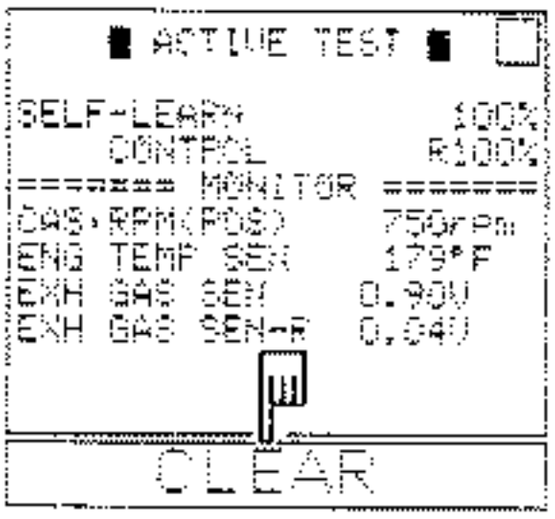

SEF374I

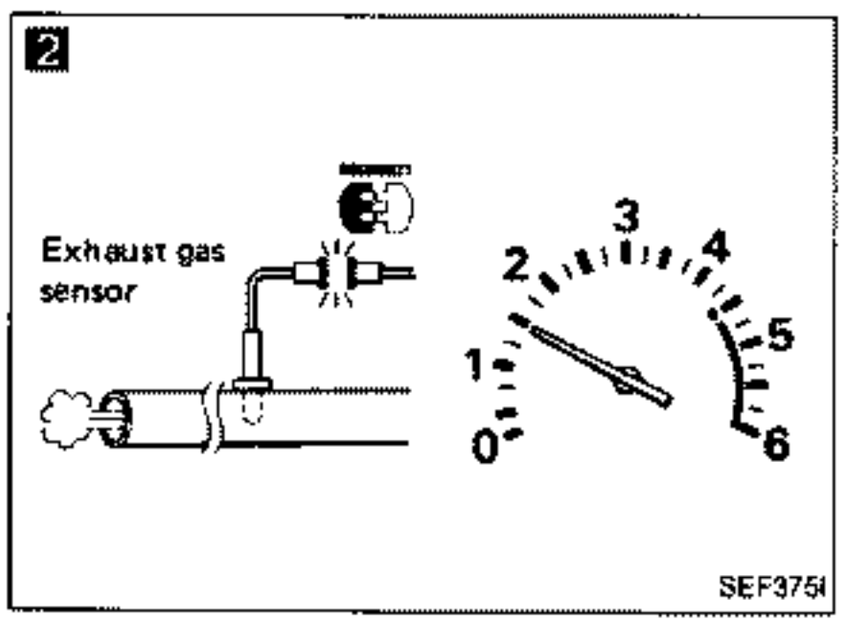

SEF375I

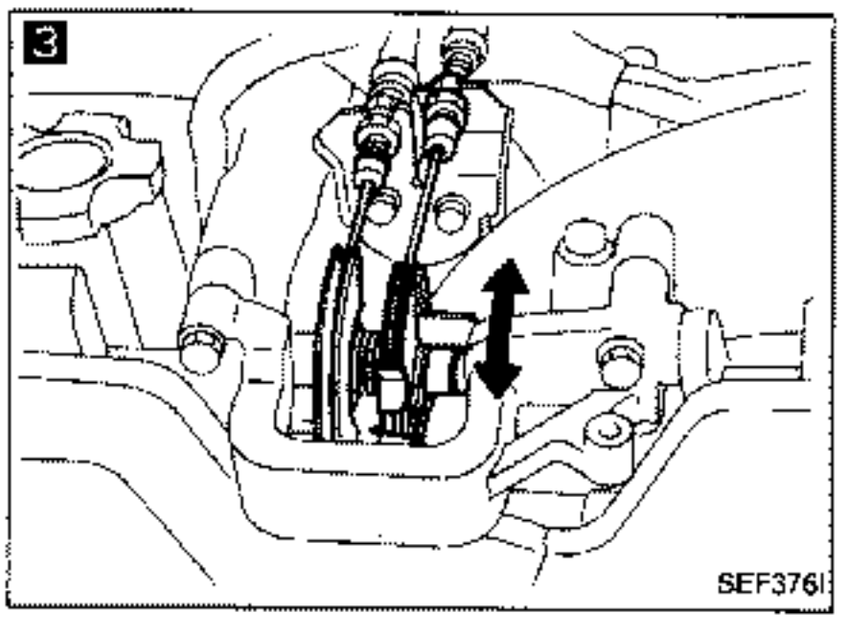
SEF376I

1

CHECK AIR REGULATOR.
When pinching the air regulator hose, does the engine speed drop?

Yes → Check air regulator and circuit.

No ↓

2

CHECK INTAKE AIR LEAK.

1. Select "SELF-LEARNING CONT" in "ACTIVE TEST" mode.
2. Clear the self-learning control coefficient by touching "CLEAR".
3. Does the engine speed drop?

— OR —

1. Disconnect exhaust gas sensor harness connectors.
2. After racing engine at 1,500 rpm under no-load for about 30 seconds, does the engine speed drop?

Yes → Discover air leak location and repair.

No ↓

3

CHECK THROTTLE LINKAGE.

1. Check that throttle linkage moves smoothly.
2. Confirm that throttle valve both fully opens and fully closes.

N.G. → Repair throttle linkage or sticking of throttle valve.

O.K. ↓

INSPECTION END

Diagnostic Procedure 2 — Hunting

1

CHECK EXHAUST GAS SENSOR.
When disconnecting exhaust gas sensor harness connector, is the hunting fixed?

Yes → Check exhaust gas sensor(s). (See page EF & EC-128.)

No ↓

2

PERFORM POWER BALANCE TEST.

1. Perform "POWER BALANCE" in "ACTIVE TEST" mode.
2. Is there any cylinder which does not produce a momentary engine speed drop?

—OR—

When disconnecting each ignition coil harness connector one at a time, is there any cylinder which does not produce a momentary engine speed drop?

No → Go to **4**.

Yes ↓

3

CHECK SPARK PLUGS.
Remove the spark plugs and check for fouling, etc.

N.G. → Repair or replace spark plug(s).

O.K. ↓

(Go to Ⓐ on next page.)

1

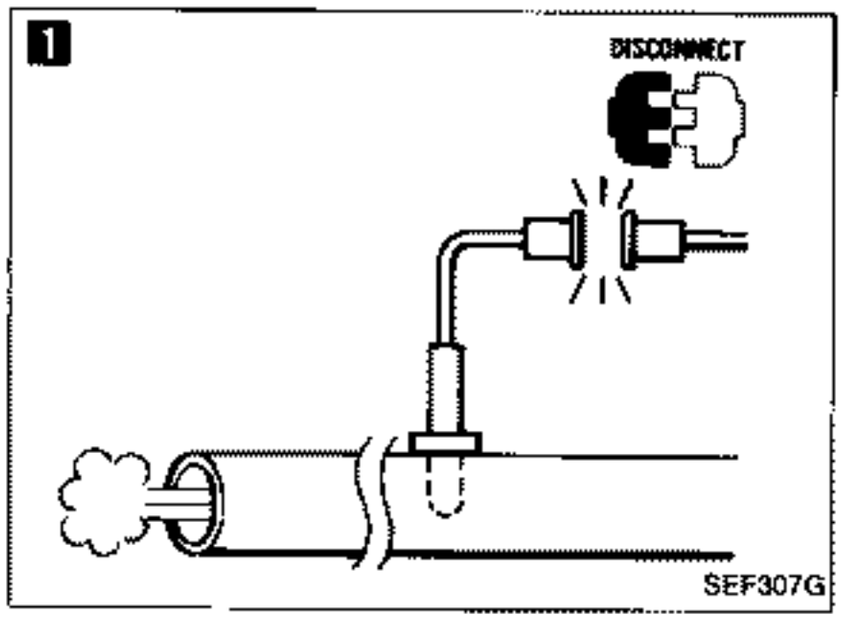

2

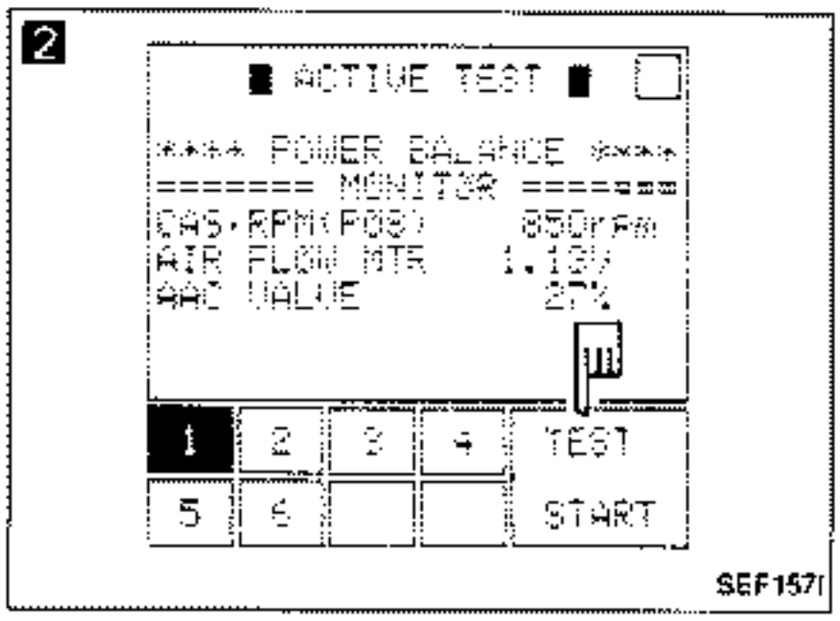

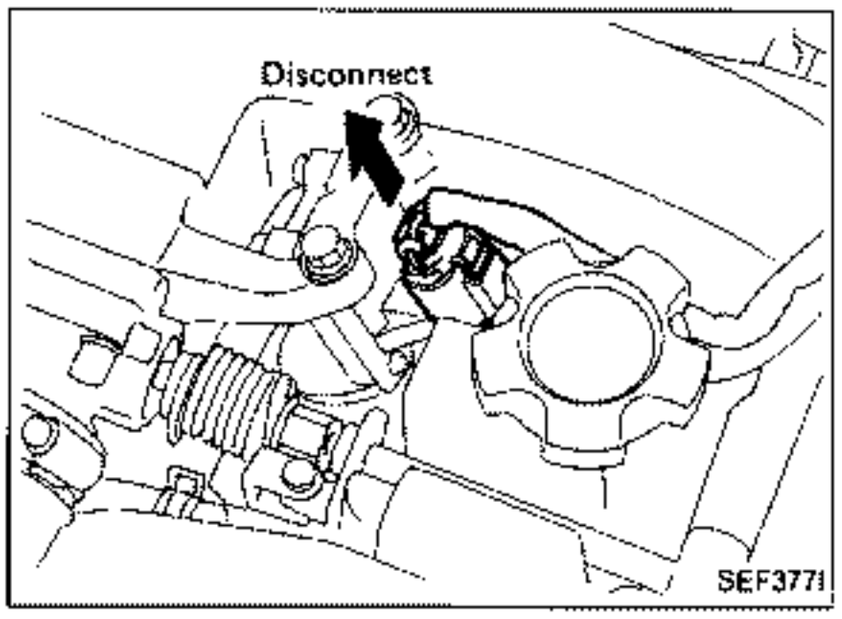

3

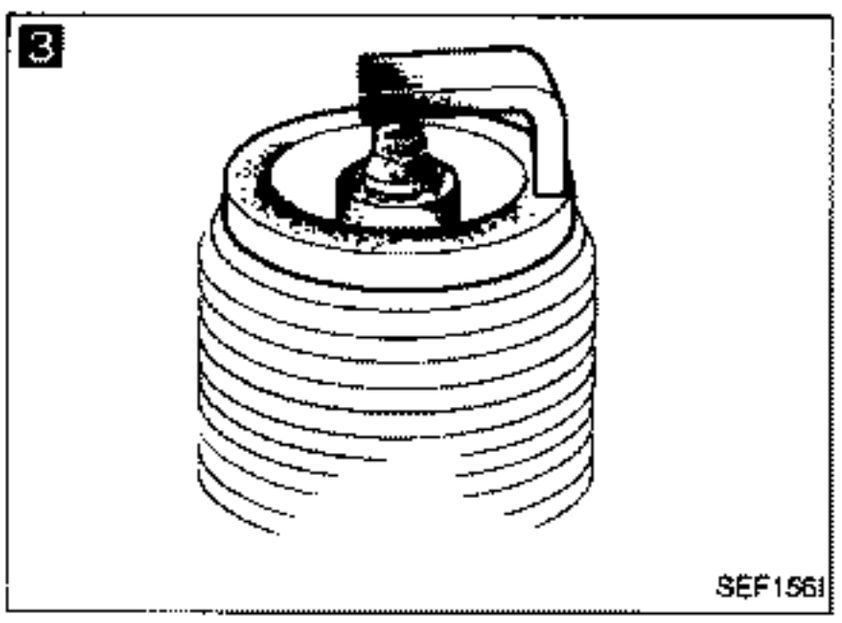

Diagnostic Procedure 2 — Hunting (Cont'd)

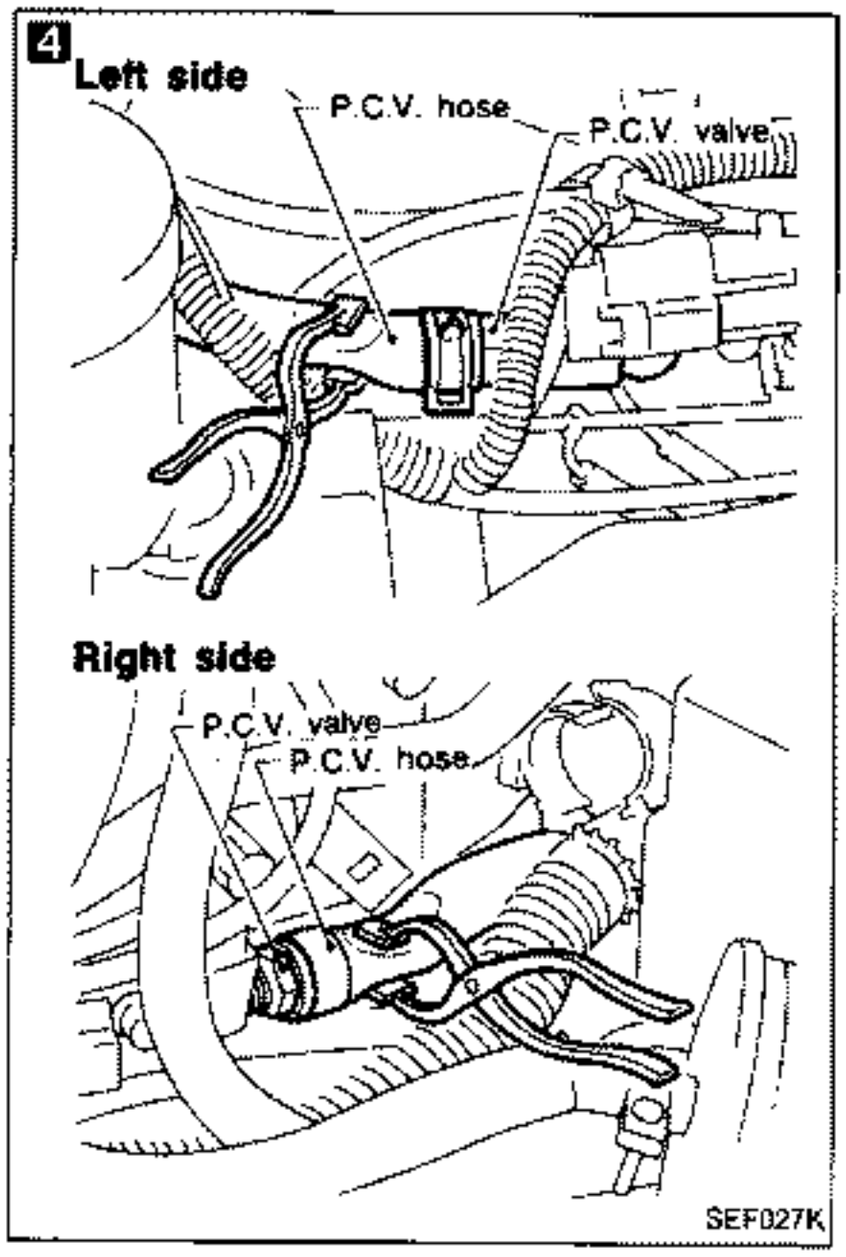

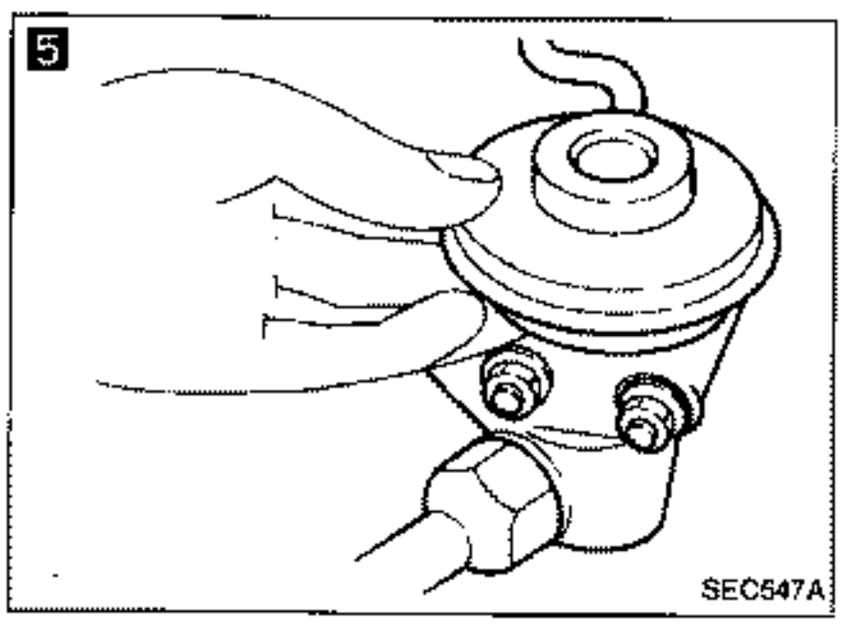

Ⓐ

4

CHECK FOR INTAKE AIR LEAK.
When pinching blow-by hose (lowering the blow-by air supply), does the engine speed rise or the engine become more stable?

Yes → Discover air leak location and repair.

No ↓

5

CHECK E.G.R. CONTROL VALVE.
Check E.G.R. control valve for sticking.

N.G. → Repair or replace.

O.K. ↓

INSPECTION END

Diagnostic Procedure 3 — Unstable Idle

1

CHECK E.G.R. CONTROL VALVE.
Check E.G.R. control valve for sticking.

N.G. → Repair or replace.

O.K. ↓

2

PERFORM POWER BALANCE TEST.

1. Perform "POWER BALANCE" in "ACTIVE TEST" mode.
2. Is there any cylinder which does not produce a momentary engine speed drop?

— OR —

When disconnecting each injector harness connector one at a time, is there any cylinder which does not produce a momentary engine speed drop?

No → Go to **6**.

Yes ↓

3

CHECK INJECTOR.

1. Remove crank angle sensor from engine. (Harness connector should remain connected.)
2. Turn ignition switch ON. (Do not start engine.)
3. When rotating crank angle sensor shaft, does each injector make an operating sound?

No → Check injector(s) and circuit(s).

Yes ↓

4

CHECK IGNITION SPARK.

1. Disconnect ignition coil assembly from collector.
2. Connect a known good spark plug to the ignition coil assembly.
3. Place end of spark plug against a suitable ground and crank engine.
4. Check for spark.

N.G. → Check ignition coil, power transistor unit and their circuits. (See page EF & EC-118.)

O.K. ↓

(Go to Ⓐ on next page.)

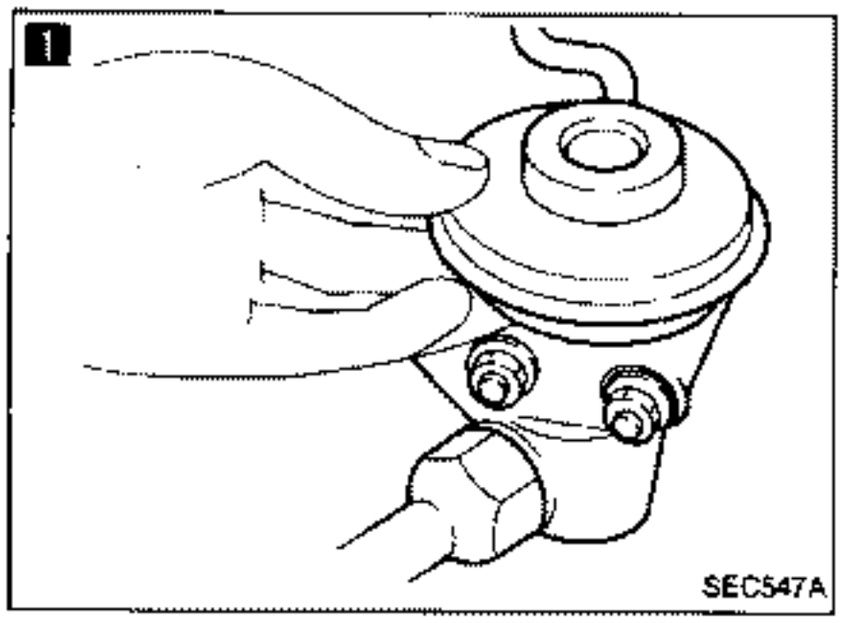

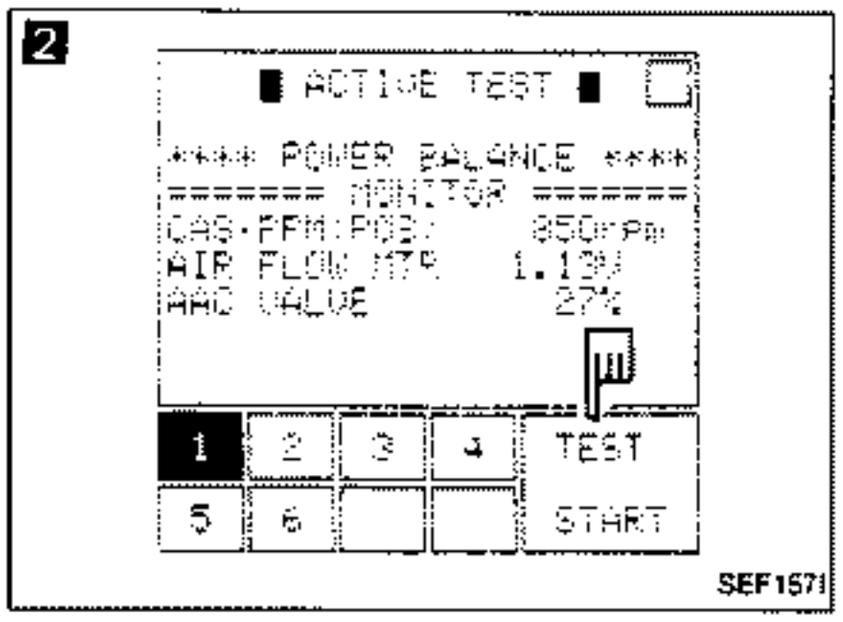

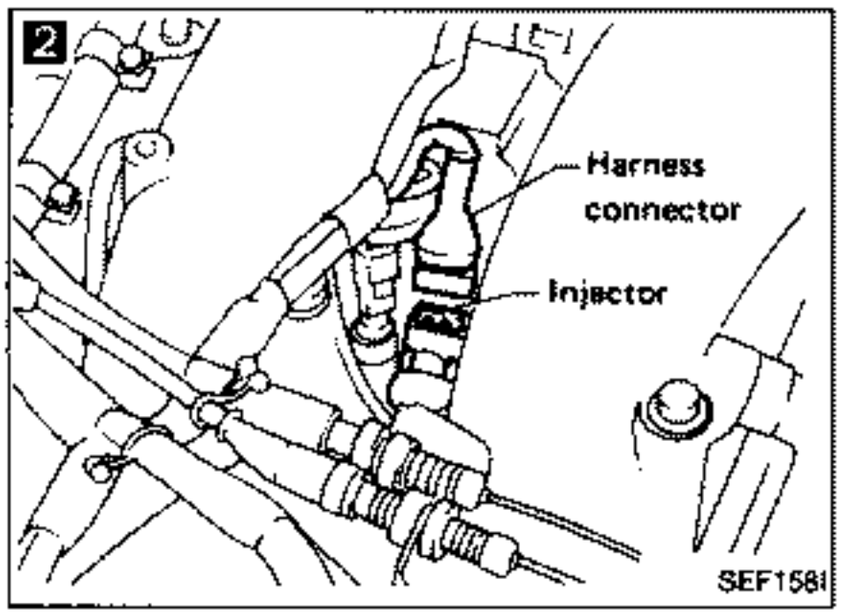

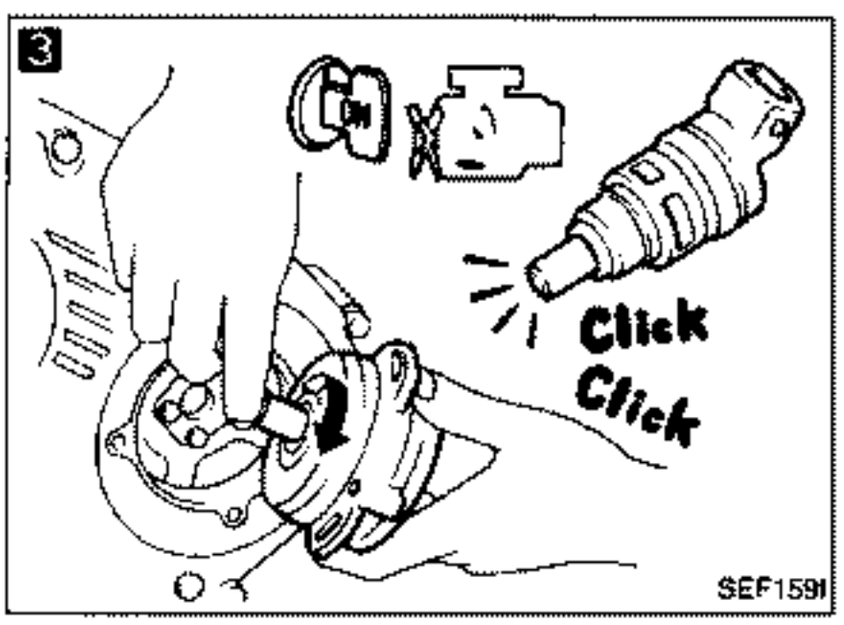

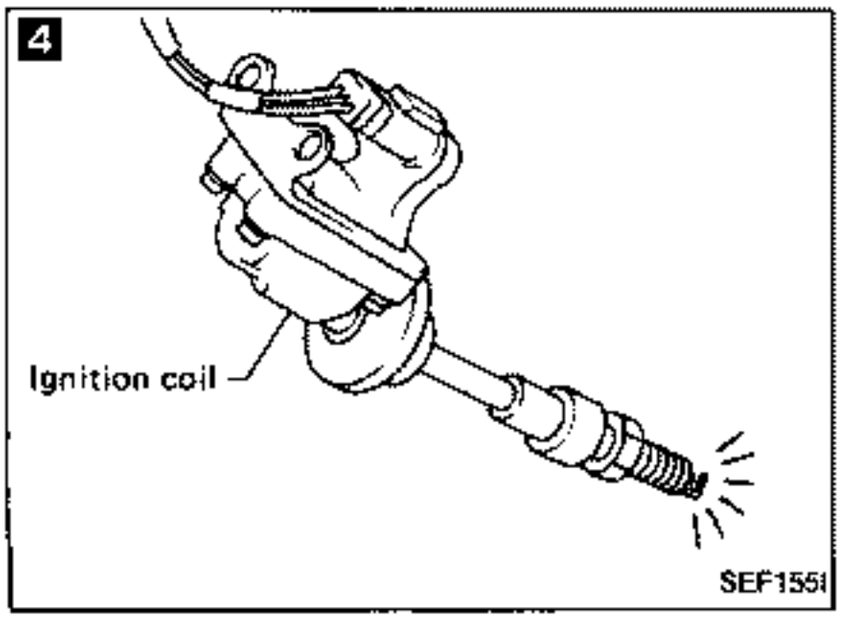

Diagnostic Procedure 3 — Unstable Idle (Cont'd)

5

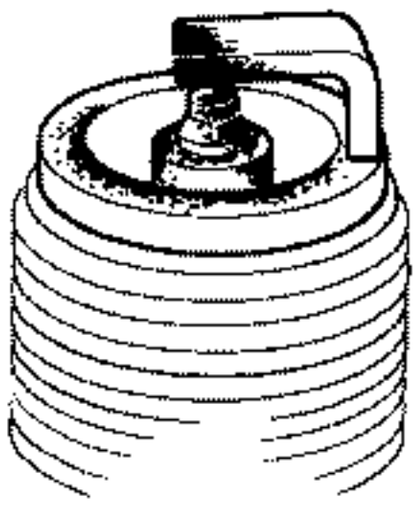

SEF156I

6

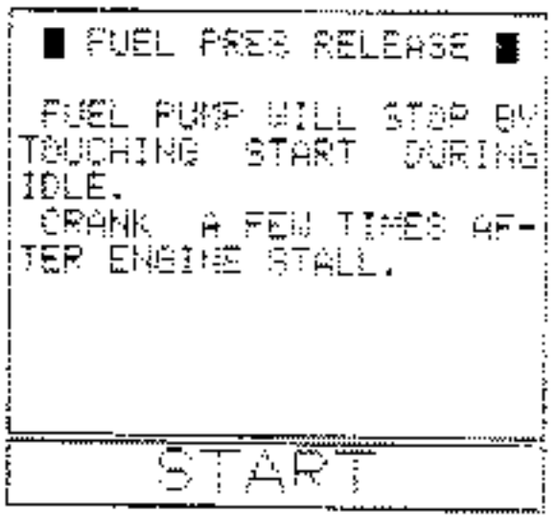



SEF204I

Ⓐ

5

CHECK SPARK PLUGS.
Remove the spark plugs and check for fouling, etc.

N.G. → Repair or replace spark plug(s).

O.K.

6

CHECK FUEL PRESSURE.

1. Perform "FUEL PRESSURE RELEASE" in "WORK SUPPORT" mode in order to release fuel pressure to zero.
2. Install fuel pressure gauge and check fuel pressure.
   At idle approx. 255 kPa (2.55 bar, 2.6 kg/cm^2, 37 psi)

N.G. → Check fuel pump and circuit.

OR

1. Release fuel pressure to zero. (Refer to page EF & EC-185.)
2. Install fuel pressure gauge and check fuel pressure.

O.K.

(Go to Ⓑ on next page.)

Diagnostic Procedure 3 — Unstable Idle (Cont'd)

7

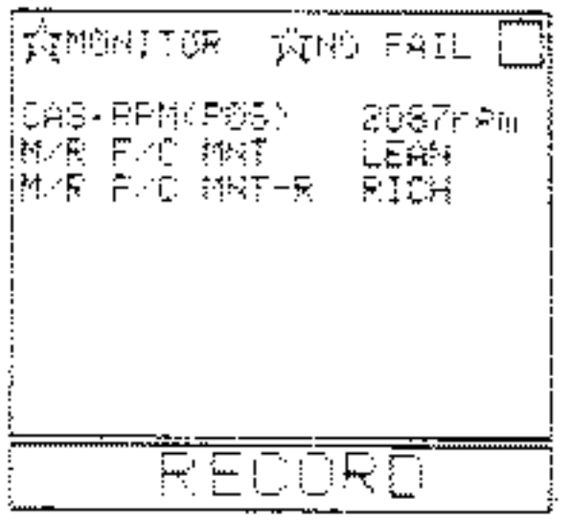

SEF160I

7

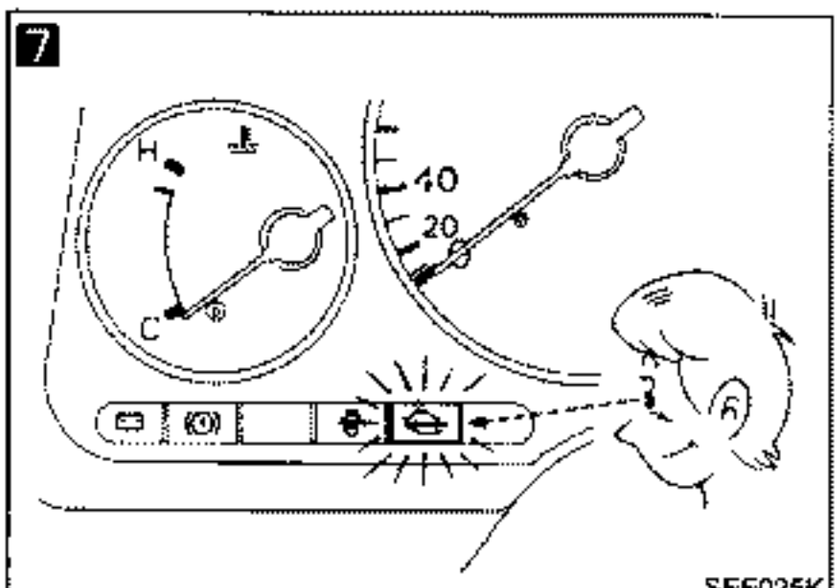

SEF025K

8

Left side

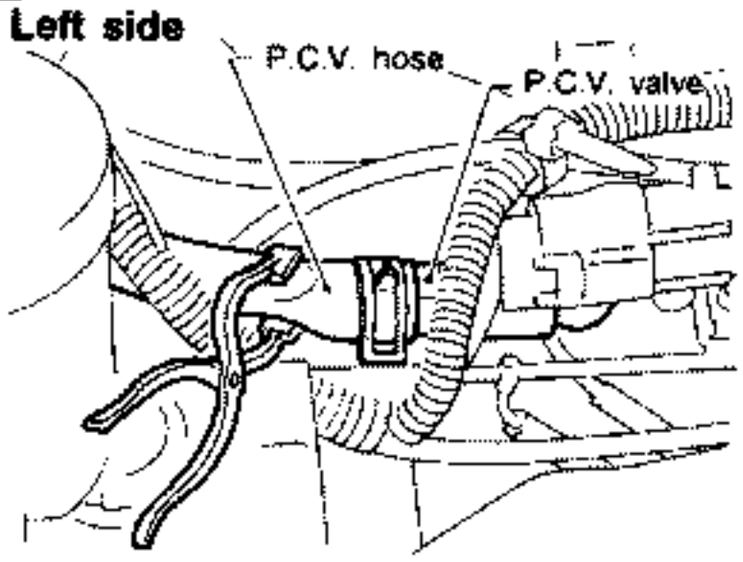

Right side

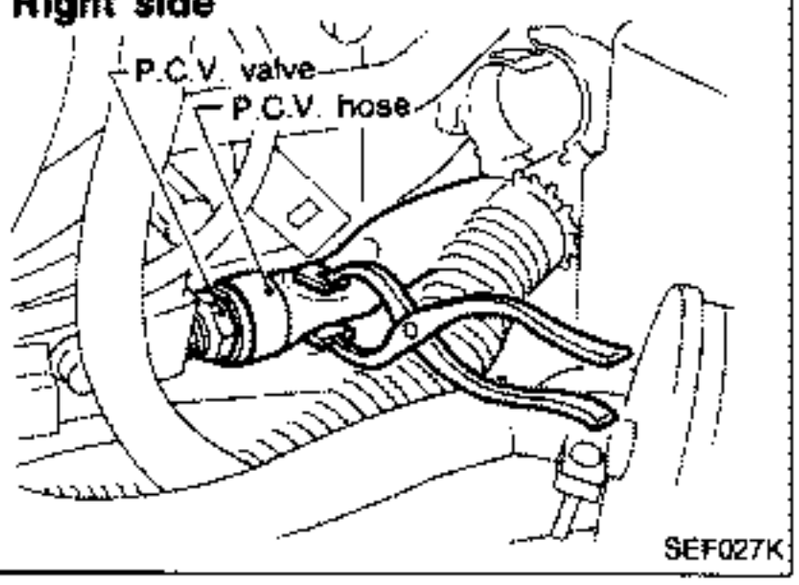

SEF027K

Ⓑ

7

CHECK EXHAUST GAS SENSOR.

1. See "M/R F/C MNT (right and left sides)" in "Data monitor" mode.
2. Maintaining engine at 2,000 rpm under no-load (engine is warmed up sufficiently.), check that the monitor fluctuates between "LEAN" and "RICH" more than 5 times during 10 seconds.

RICH→LEAN→RICH→
1 time 2 times
LEAN→RICH.....

N.G. → Replace exhaust gas sensor(s).

OR

1. Set "Exhaust gas sensor monitor" in the self-diagnostic Mode II. (See page EF & EC-49.)
2. Maintaining engine at 2,000 rpm under no-load, check to make sure that check engine light goes ON and OFF more than 5 times during 10 seconds.

O.K.

8

CHECK FOR INTAKE AIR LEAK.

When pinching blow-by hose (lowering the blow-by air supply), does the engine speed rise or the engine become more stable?

Yes → Discover air leak location and repair.

No

(Go to Ⓒ on next page.)

Diagnostic Procedure 3 — Unstable Idle (Cont'd)

9

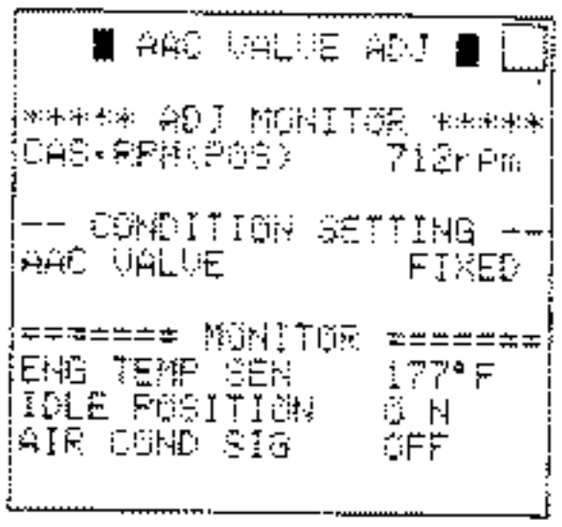

SEF145I

9

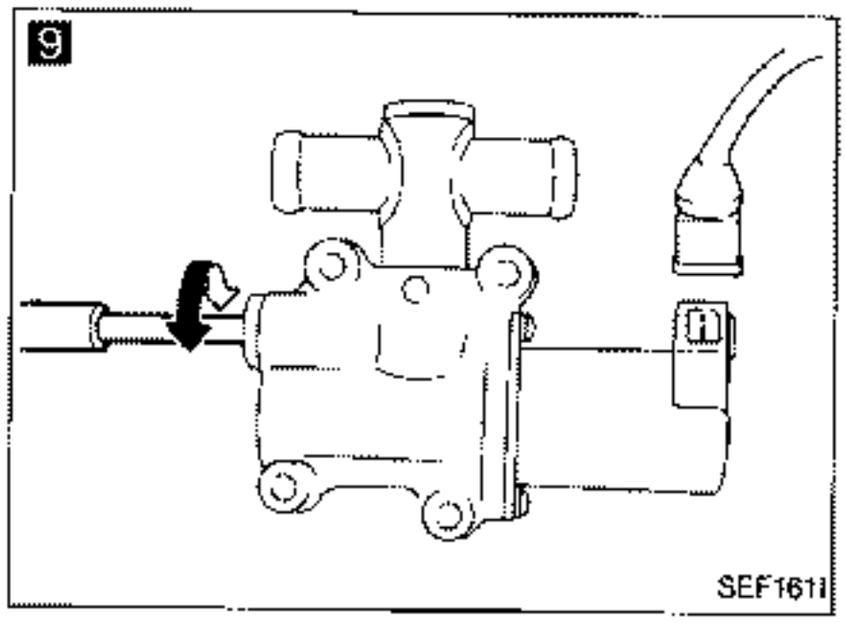

SEF161I

10

COMPRESSION PRESSURE

SEF309G

Ⓒ

9

CHECK IDLE ADJ. SCREW CLOGGING.

1. Perform "AAC VALVE ADJ" in "WORK SUPPORT" mode.
2. Can you set engine rpm as follows by turning idle adjusting screw?

	A/T*	M/T
Non-turbo	720±50 rpm	650±50 rpm
Turbo	700±50 rpm	

*: in "N" position

No → Check for IAS clogging or throttle valve clogging.

OR

1. Disconnect A.A.C. valve harness connector.
2. Can you set engine rpm as follows by turning idle adjusting screw?

	A/T*	M/T
Non-turbo	720±50 rpm	650±50 rpm
Turbo	700±50 rpm	

*: in "N" position

Yes ↓

10

CHECK COMPRESSION PRESSURE.

- Check compression pressure.

Standard: kPa (bar, kg/cm², psi)/300 rpm

1,285 (12.85, 13.1, 186)

Minimum: kPa (bar, kg/cm², psi)/300 rpm

981 (9.81, 10.0, 142)

Difference between each cylinder: kPa (bar, kg/cm², psi)/300 rpm

98 (0.98, 1.0, 14)

N.G. → Check pistons, piston rings, valves, valve seats and cylinder head gaskets.

O.K. ↓

11

CHECK E.C.U. HARNESS CONNECTOR.

Check the E.C.U. pin terminals for damage or poor connection of E.C.U. harness connector.

N.G. → Repair or replace.

O.K. ↓

12

TRY A KNOWN GOOD E.C.U.

O.K. ↓

INSPECTION END

Diagnostic Procedure 4 — Hard to Start or Impossible to Start when the Engine Is Cold

1

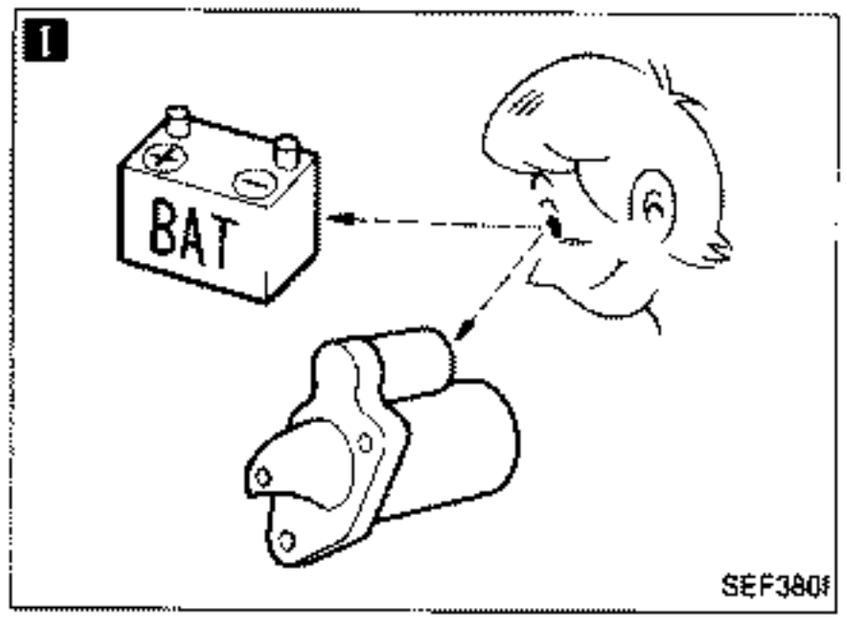

CHECK BATTERY AND STARTER.
Check battery and starter condition.
(Refer to EL section.)

N.G. → Repair or replace.

O.K. ↓

2

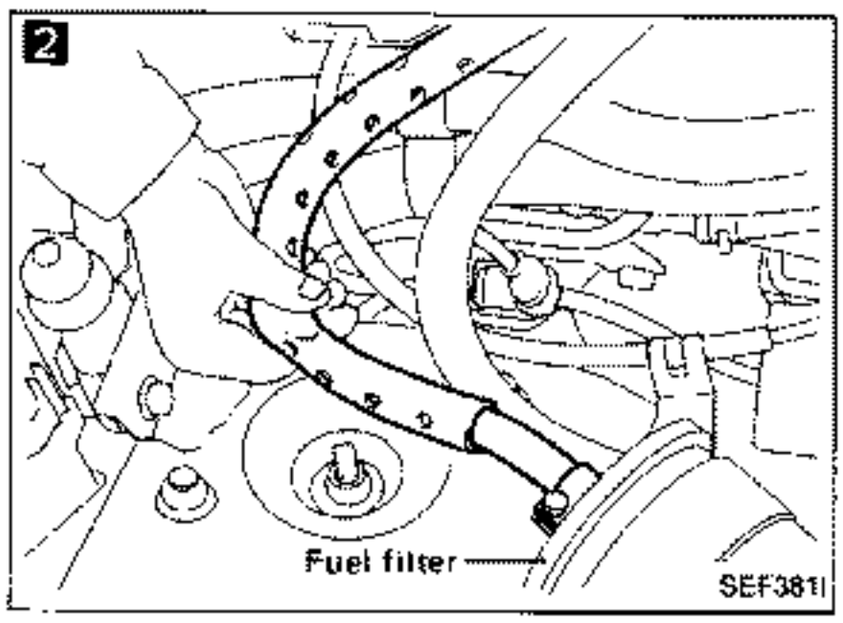

CHECK FUEL PRESSURE.
1. Pinch fuel feed hose with fingers.
2. When cranking the engine, is there any pressure on the fuel feed hose?

No → Check fuel pump and circuit. (See page EF & EC-150.)

Yes ↓

3

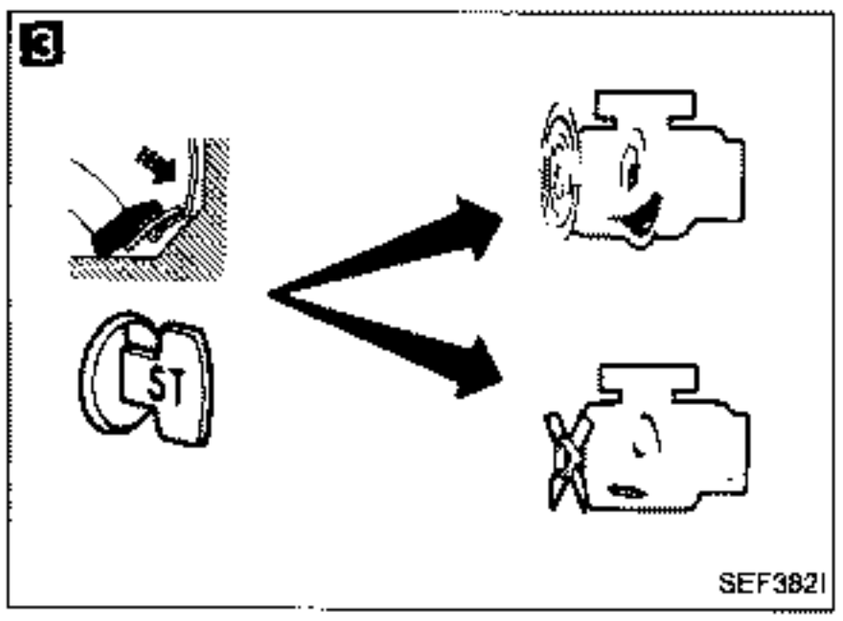

CHECK AIR REGULATOR AND A.A.C. VALVE.
When pressing accelerator pedal fully, can you start the engine.

Yes → Check A.A.C. valve, air regulator and circuits. (See pages EF & EC-156, 154.)

No ↓

4

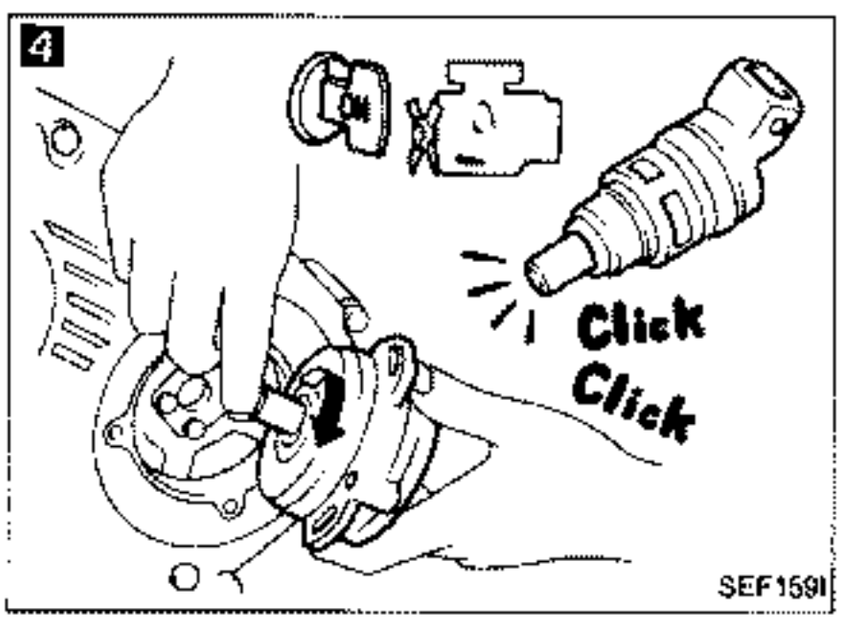

CHECK INJECTOR.
1. Remove crank angle sensor from engine. (Harness connector should remain connected.)
2. Turn ignition switch ON. (Do not start engine.)
3. When rotating crank angle sensor shaft, does each injector make an operating sound?

No → Check injector(s) and circuit(s).

Yes ↓

5

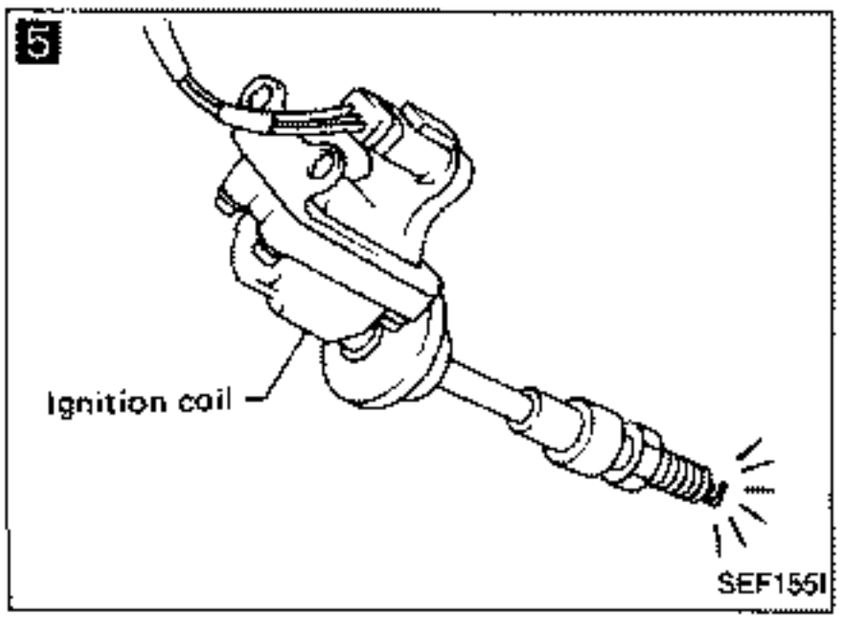

CHECK IGNITION SPARK.
1. Disconnect ignition coil assembly from collector.
2. Connect a known good spark plug to the ignition coil assembly.
3. Place end of spark plug against a suitable ground and crank engine.
4. Check for spark.

N.G. → Check ignition coil, power transistor unit and their circuits. (See page EF & EC-118.)

O.K. ↓

(Go to Ⓐ on next page.)

Diagnostic Procedure 4 — Hard to Start or Impossible to Start when the Engine is Cold (Cont'd)

6

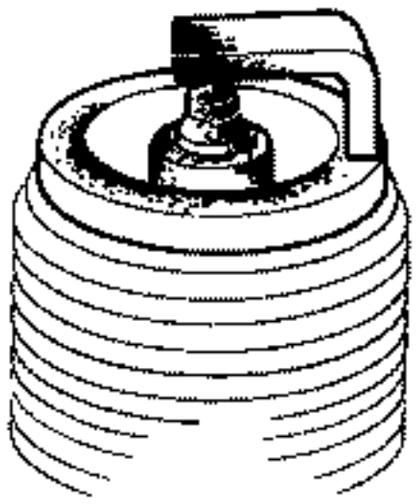

SEF156I

(A)

6

CHECK SPARK PLUGS.
Remove the spark plugs and check for fouling, etc.

N.G. → Repair or replace spark plug(s).

O.K.

7

CHECK E.C.U. HARNESS CONNECTOR.
Check the E.C.U. pin terminals for damage or poor connection of E.C.U. harness connector.

N.G. → Repair or replace.

O.K.

8

CHECK E.C.U. POWER SUPPLY AND GROUND CIRCUIT.
Refer to page EF & EC-104.

N.G. → Repair or replace.

O.K.

9

TRY A KNOWN GOOD E.C.U.

INSPECTION END

Diagnostic Procedure 5 — Hard to Start or Impossible to Start when the Engine is Hot

1

CHECK FUEL PRESSURE.
1. Pinch fuel feed hose with fingers.
2. When cranking the engine, is there any pressure on the fuel feed hose?

No → Check fuel pump and circuit. (See page EF & EC-150.)

Yes ↓

2

CHECK FUEL VAPOR.

1. Select "PRVR CONT SOL VALVE" in "ACTIVE TEST" mode.
2. After touching "ON", can you start the engine?

— OR —

1. Disconnect fuel pressure regulator vacuum hose and plug hose.
2. Can you start engine?

Yes → Check fuel properties.

No ↓

3

CHECK INJECTOR.
1. Remove crank angle sensor from engine. (Harness connector should remain connected.)
2. Turn ignition switch ON. (Do not start engine.)
3. When rotating crank angle sensor shaft, does each injector make an operating sound?

No → Check injector(s) and circuit(s).

Yes ↓

4

CHECK IGNITION SPARK.
1. Disconnect ignition coil assembly from collector.
2. Connect a known good spark plug to the ignition coil assembly.
3. Place end of spark plug against a suitable ground and crank engine.
4. Check for spark.

N.G. → Check ignition coil, power transistor unit and circuits. (See page EF & EC-118.)

O.K. ↓

(Go to Ⓐ on next page.)

1

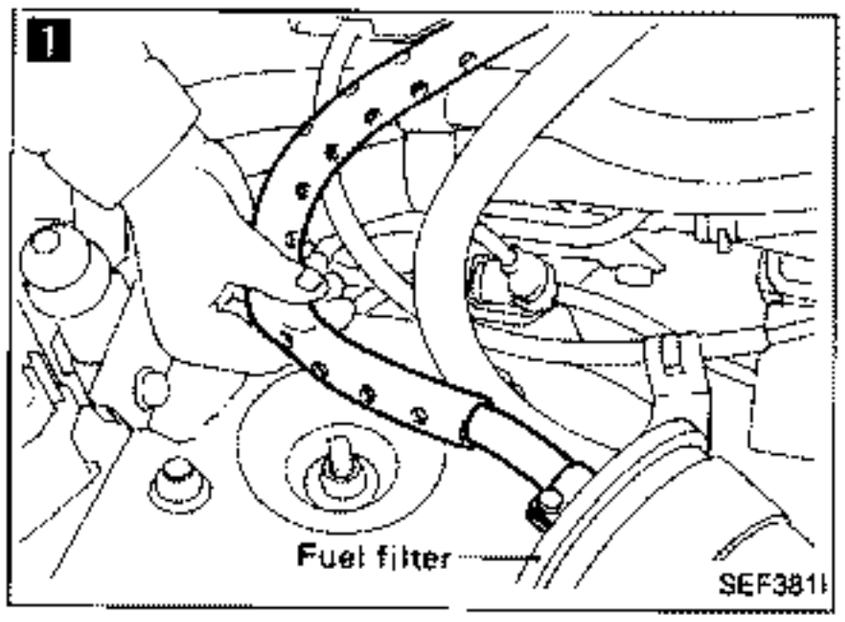

2

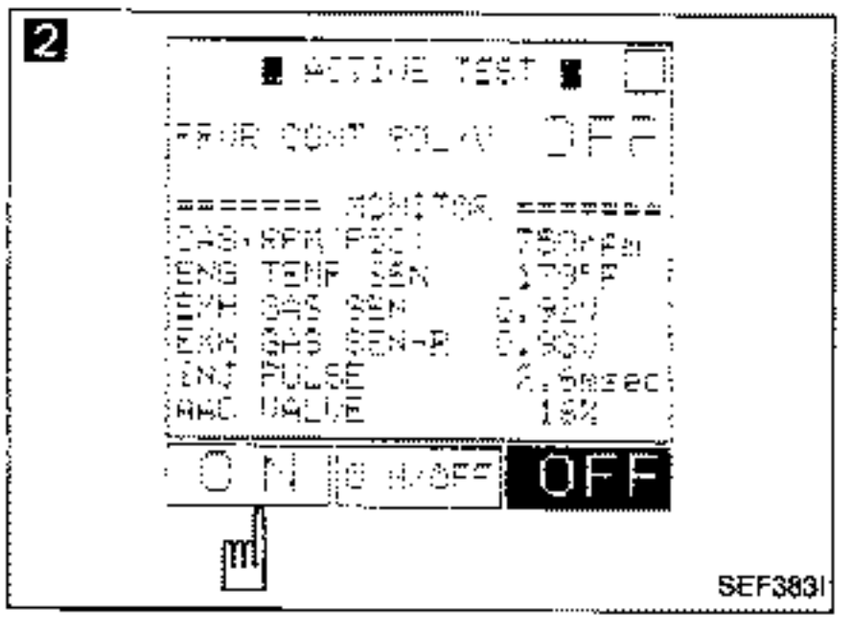

2

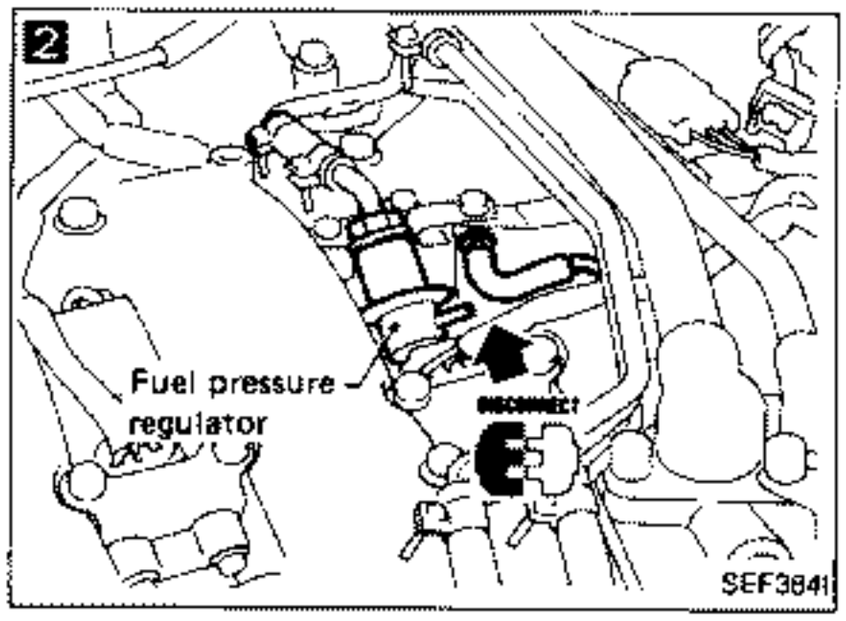

3

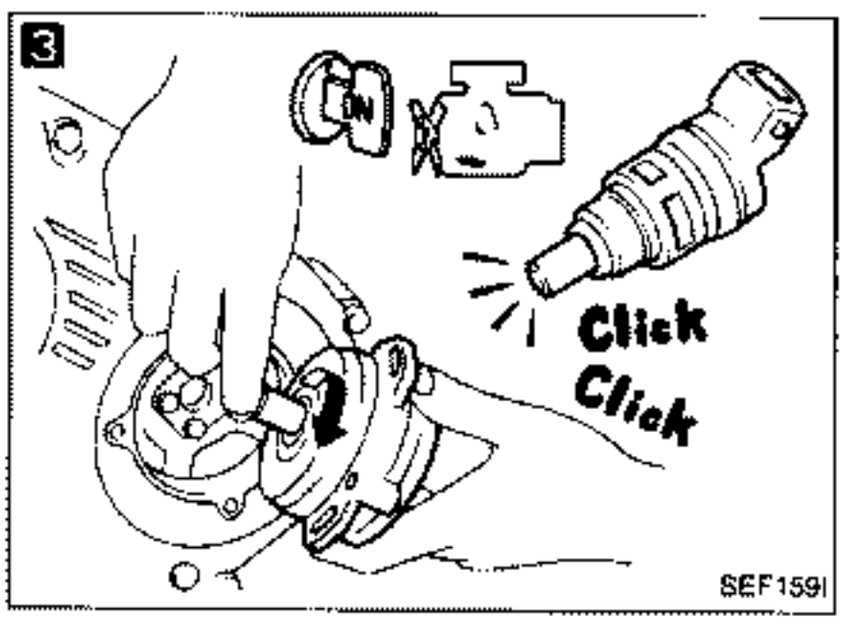

4

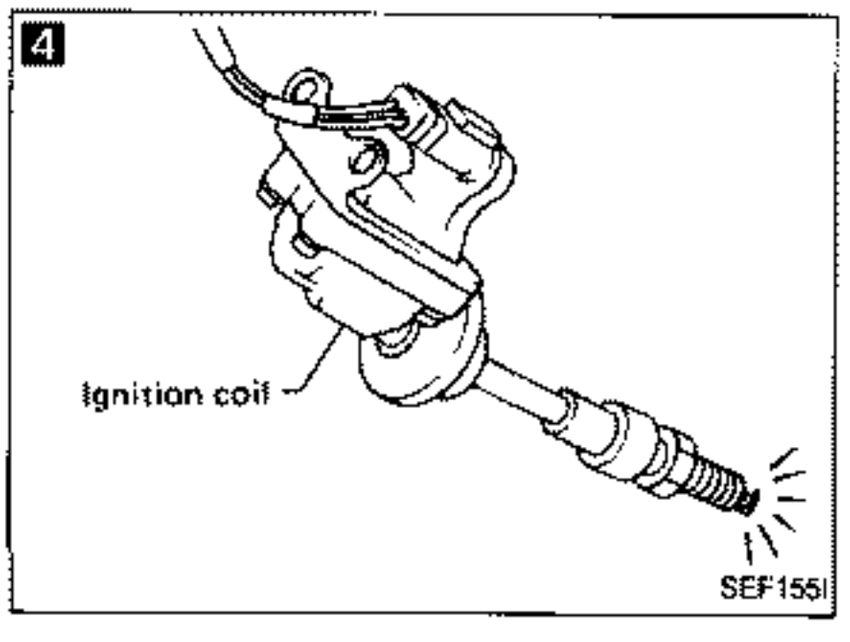

Diagnostic Procedure 5 — Hard to Start or Impossible to Start when the Engine is Hot (Cont'd)

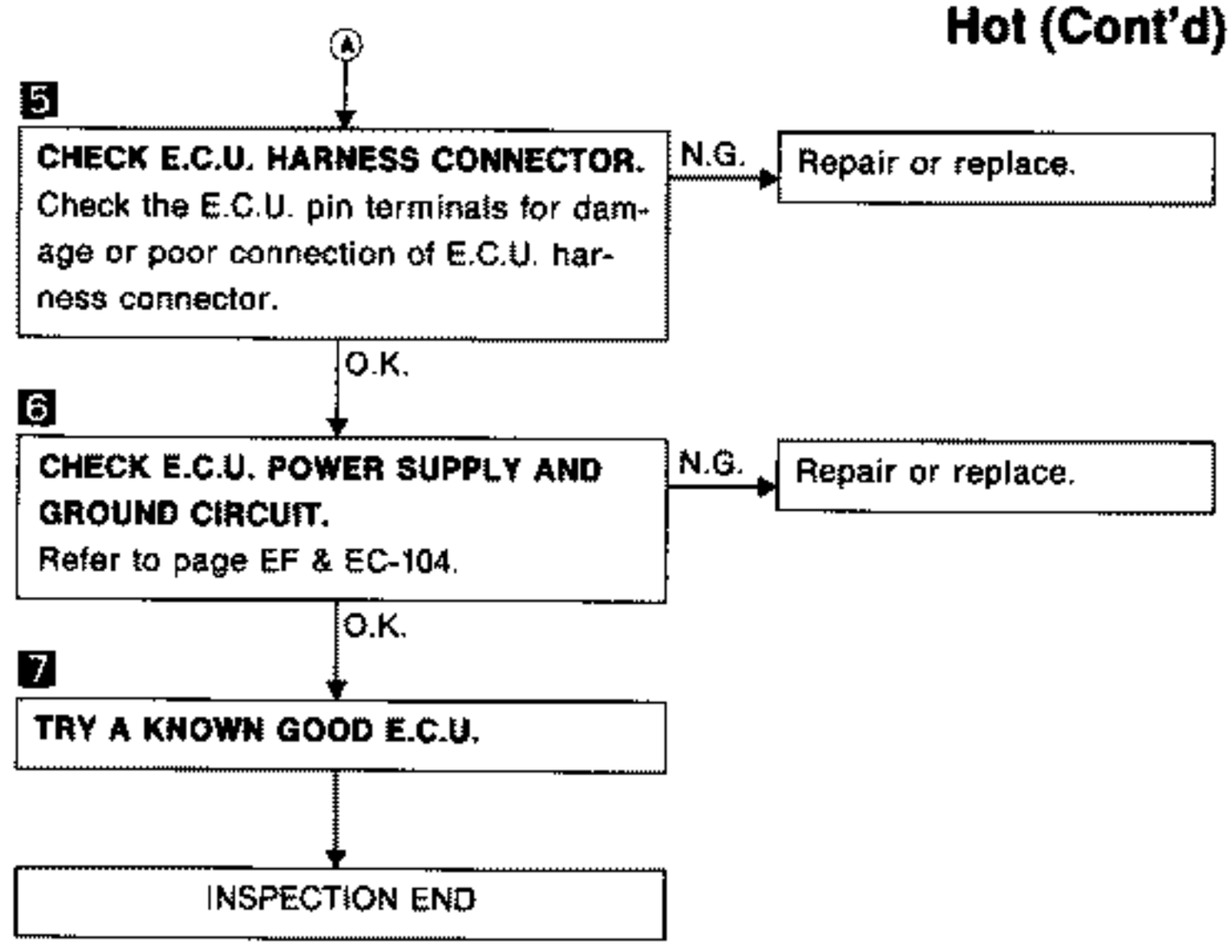

Diagnostic Procedure 6 — Hard to Start or Impossible to Start under Normal Conditions

1

CHECK BATTERY AND STARTER.
Check battery and starter operation.
(Refer to EL section.)

N.G. → Repair or replace.

O.K. ↓

2

CHECK FUEL PRESSURE.
1. Pinch fuel feed hose with fingers.
2. When cranking the engine, is there any pressure on the fuel feed hose?

No → Check fuel pump and circuit. (See page EF & EC-150.)

Yes ↓

3

CHECK INJECTOR FOR LEAKAGE.
When pressing accelerator pedal fully, can you start the engine.

Yes → Check injector(s) for leakage.

No ↓

4

CHECK INJECTOR.
1. Remove crank angle sensor from engine. (Harness connector should remain connected.)
2. Turn ignition switch ON. (Do not start engine.)
3. When rotating crank angle sensor shaft, does each injector make an operating sound?

No → Check injectors and circuits.

Yes ↓

5

CHECK IGNITION SPARK.
1. Disconnect ignition coil assembly from collector.
2. Connect a known good spark plug to the ignition coil assembly.
3. Place end of spark plug against a suitable ground and crank engine.
4. Check for spark.

N.G. → Check ignition coil, power transistor unit and circuits. (See page EF & EC-118.)

O.K. ↓

(Go to Ⓐ on next page.)

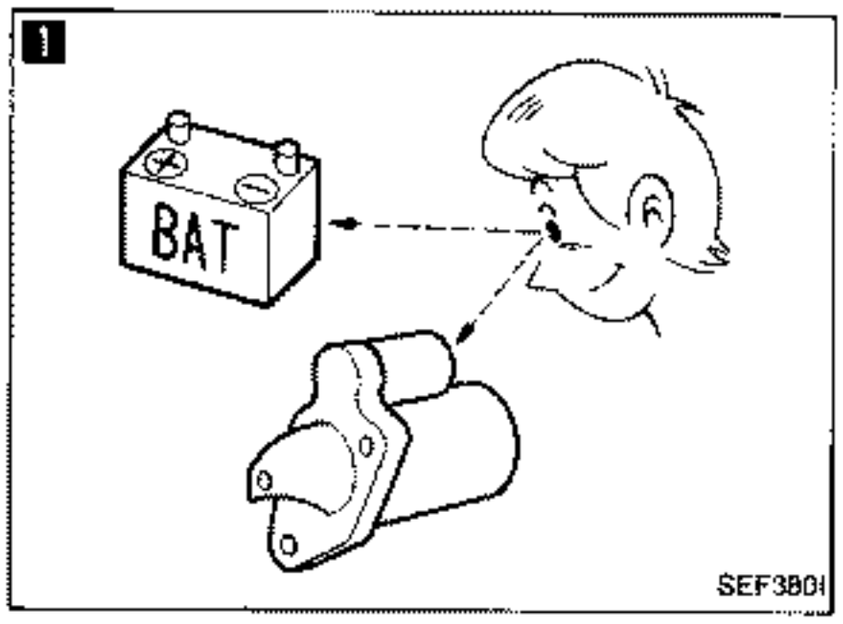

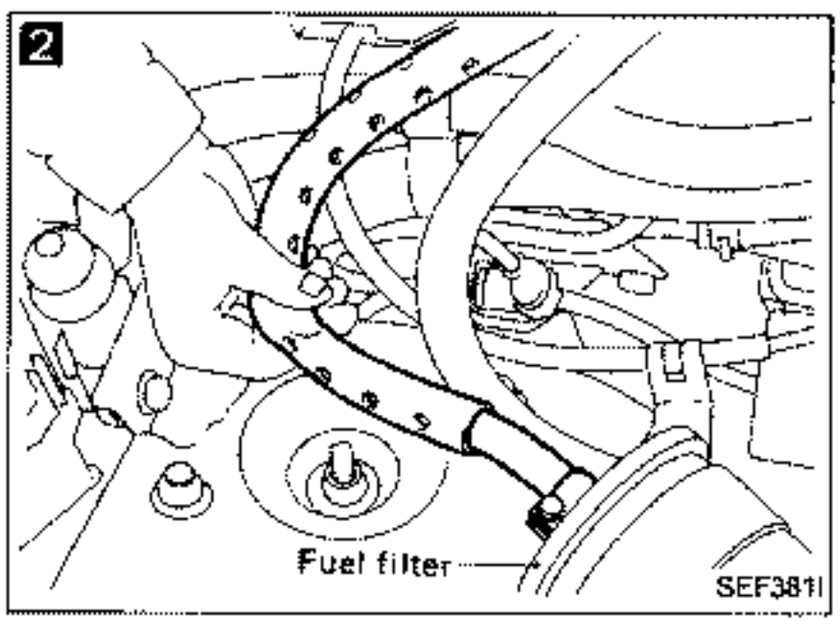

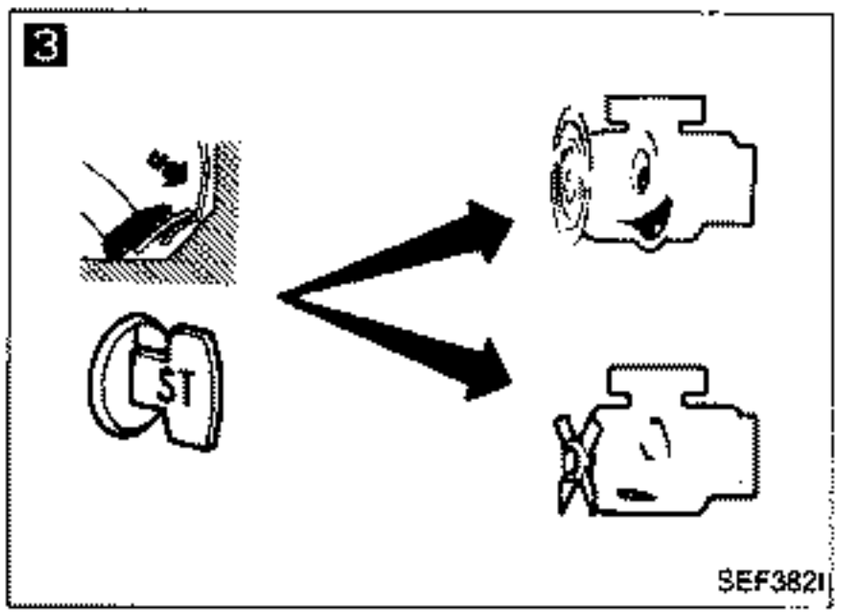

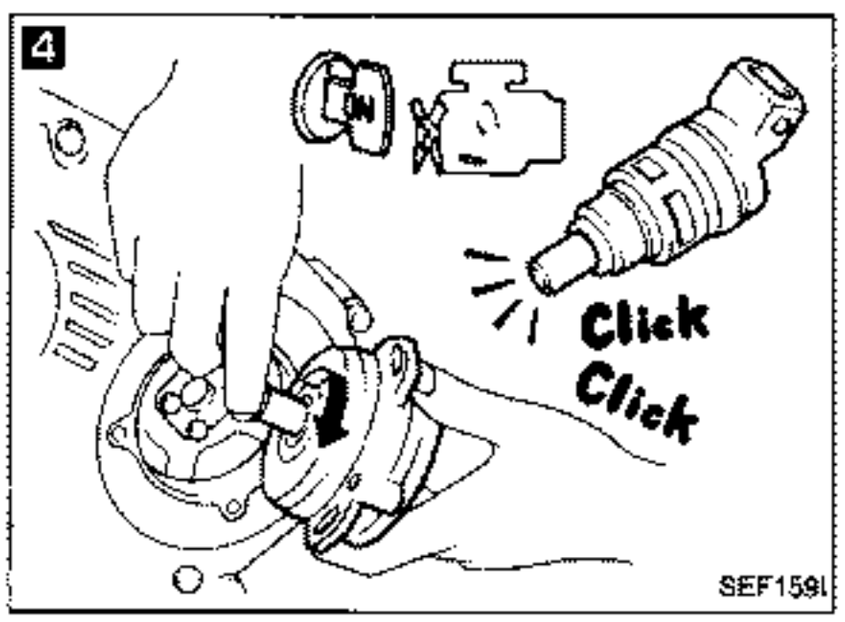

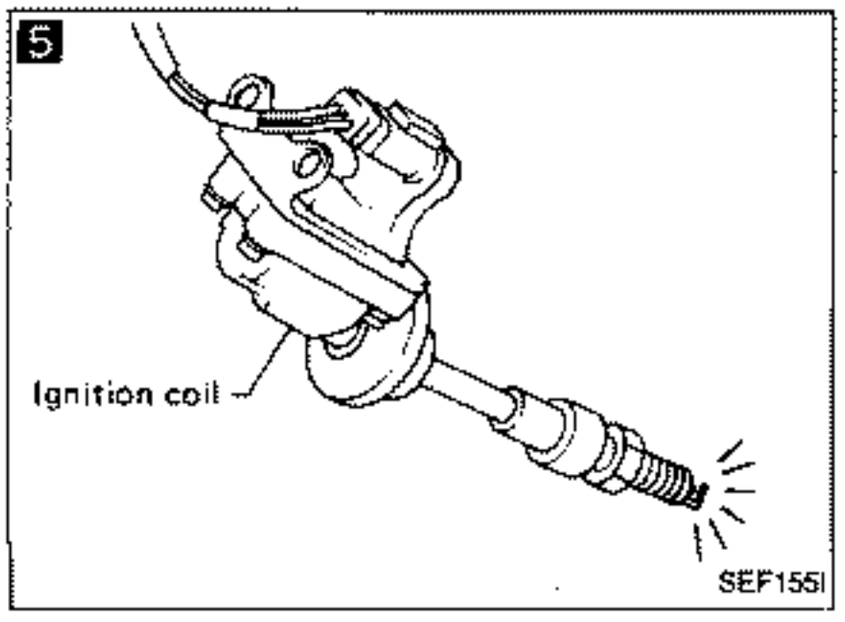

Diagnostic Procedure 6 — Hard to Start or Impossible to Start under Normal Conditions (Cont'd)

6

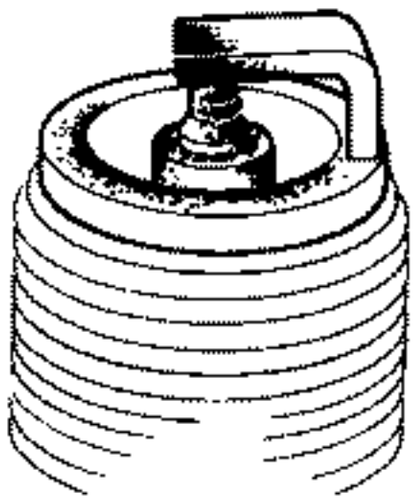

SEF156I

7

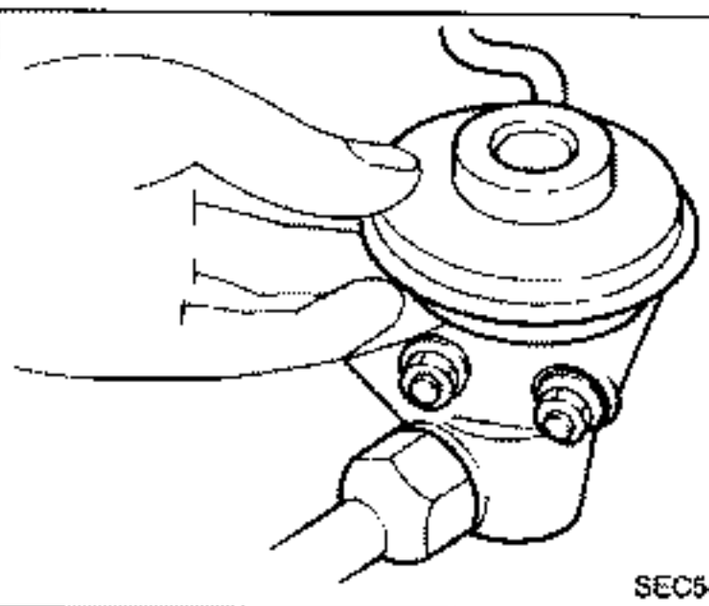

SEC547A

Ⓐ

6 **CHECK SPARK PLUGS.**
Remove the spark plugs and check for fouling, etc.
N.G. → Repair or replace spark plug(s).
O.K. ↓

7 **CHECK E.G.R. CONTROL VALVE.**
Check E.G.R. control valve for sticking.
N.G. → Repair or replace.
O.K. ↓

8 **CHECK E.C.U. HARNESS CONNECTOR.**
Check the E.C.U. pin terminals for damage or poor connection of E.C.U. harness connector.
N.G. → Repair or replace.
O.K. ↓

9 **CHECK E.C.U. POWER SUPPLY AND GROUND CIRCUIT.**
Refer to page EF & EC-104.
N.G. → Repair or replace.
O.K. ↓

10 **TRY A KNOWN GOOD E.C.U.**
Trouble is fixed. → Replace E.C.U.
Trouble is not fixed. ↓

11 **CHECK TIMING BELT FOR PROPER INSTALLATION.**
N.G. → Replace timing belt.
O.K. ↓

INSPECTION END

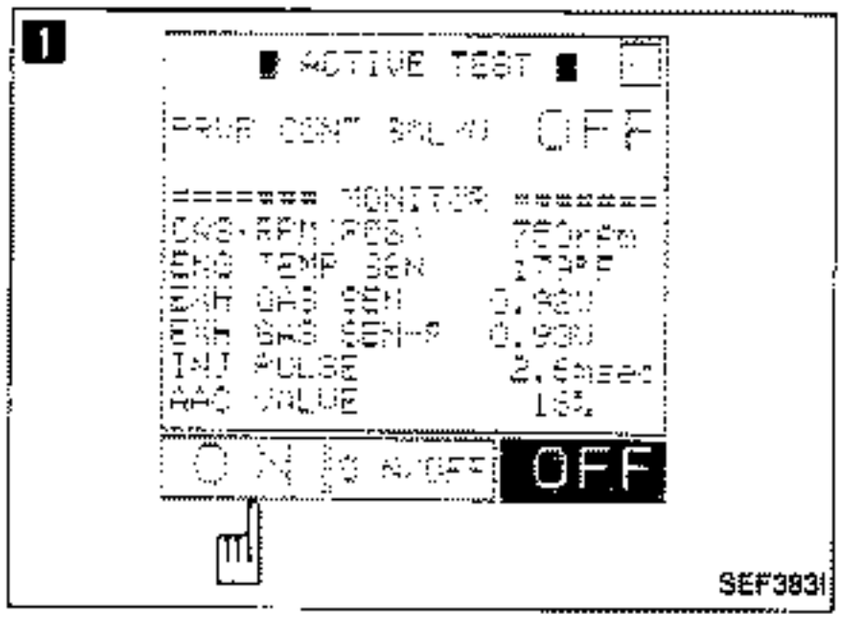

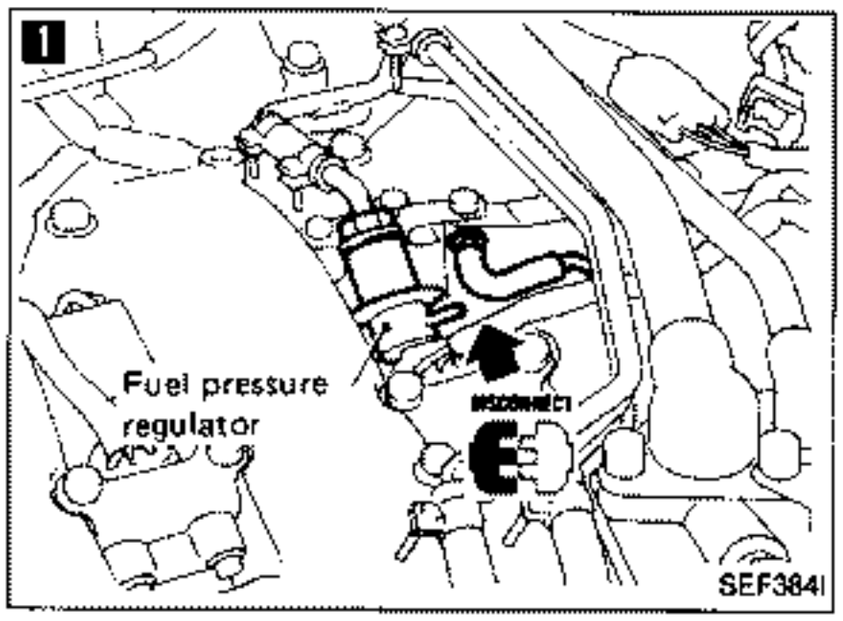

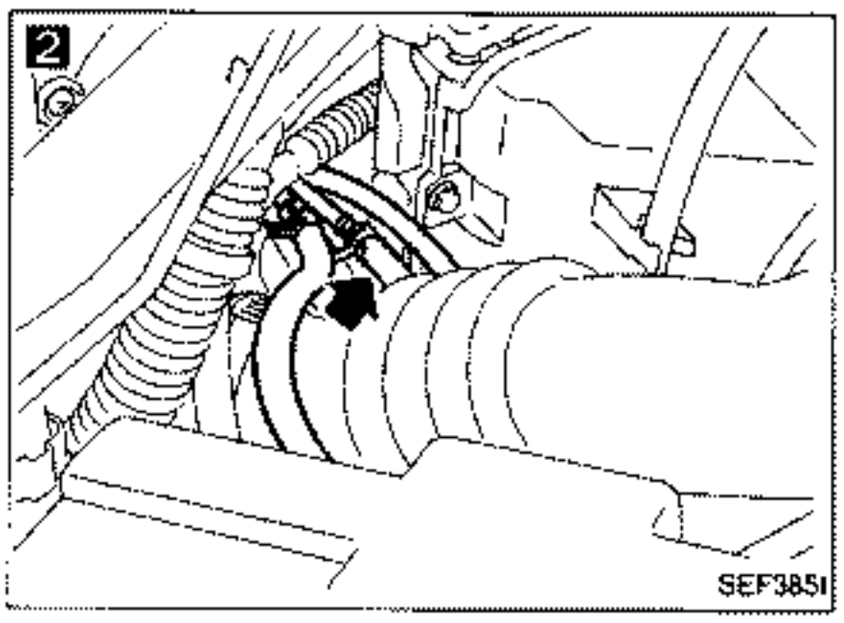

Diagnostic Procedure 7 — Hesitation when the Engine is Hot

1

CHECK FUEL VAPOR.

1. Select "PRVR CONT SOL VALVE" in "ACTIVE TEST" mode.
2. After touching "ON", perform cruise test.
3. Does the hesitation disappear?

Yes → Check fuel properties.

OR

1. Disconnect fuel pressure regulator vacuum hose and plug hose.
2. Perform cruise test.
3. Does the hesitation disappear?

No ↓

2

CHECK CANISTER PURGE.

1. Disconnect canister purge line hose and plug hose.
2. Perform cruise test.
3. Does the hesitation disappear?

Yes → Check purge and vacuum lines.

No ↓

INSPECTION END

1

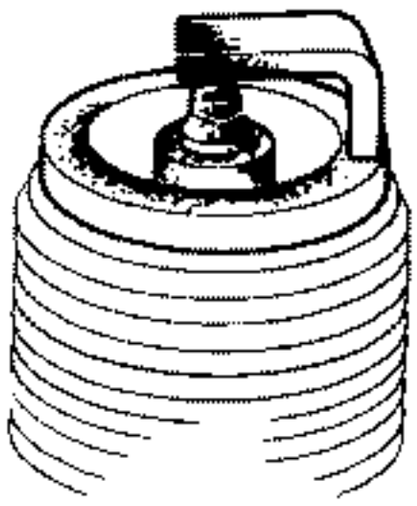

SEF156I

2

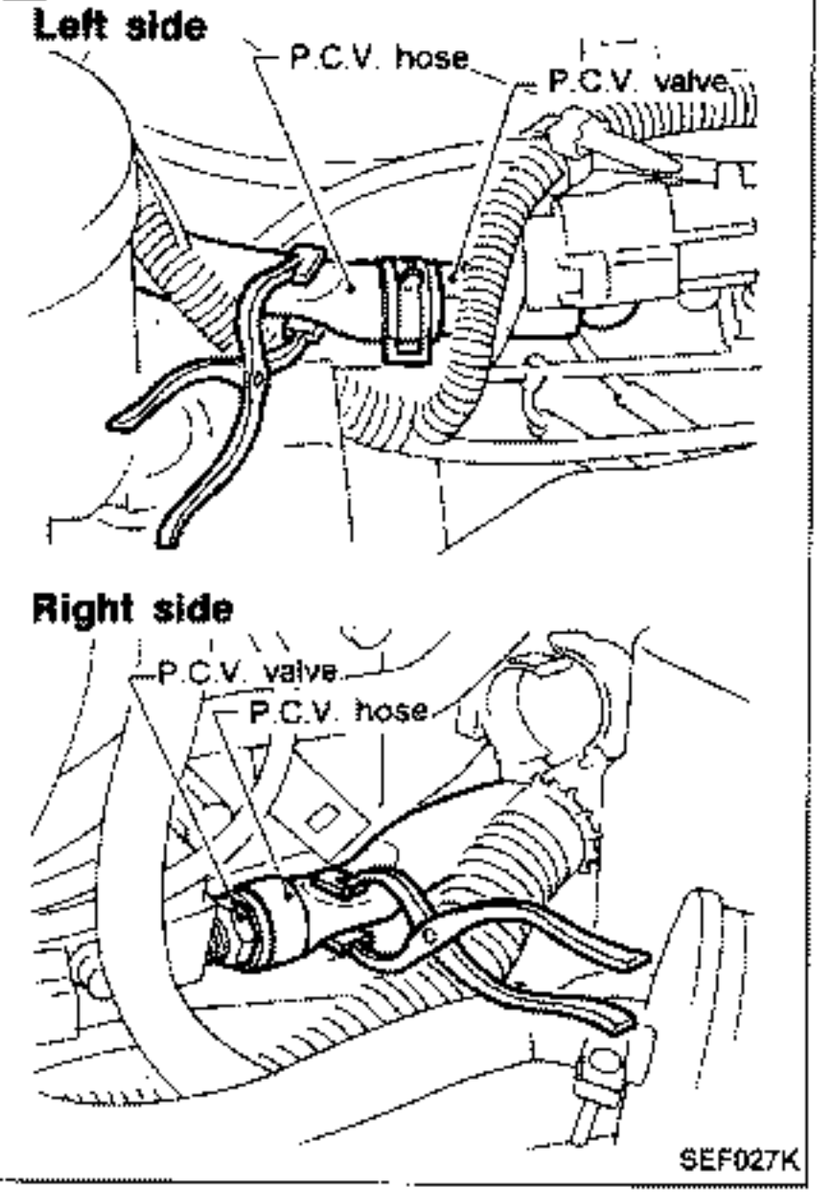

SEF027K

Diagnostic Procedure 8 — Hesitation when the Engine is Cold

1

CHECK SPARK PLUGS.
Remove spark plugs and check for fouling, etc.

N.G. → Repair or replace spark plug(s).

O.K. ↓

2

CHECK FOR INTAKE AIR LEAK.
When pinching blow-by hose (lowering the blow-by air supply), does the engine speed rise or the engine become more stable?

Yes → Discover air leak location and repair.

No ↓

3

TRY A KNOWN GOOD AIR FLOW METER.

Trouble is fixed. → Replace air flow meter.

Trouble is not fixed. ↓

4

CHECK FOR INTAKE VALVE DEPOSITS.
If there are deposits on intake valves, remove them.

↓

INSPECTION END

Diagnostic Procedure 9 — Hesitation under Normal Conditions

1

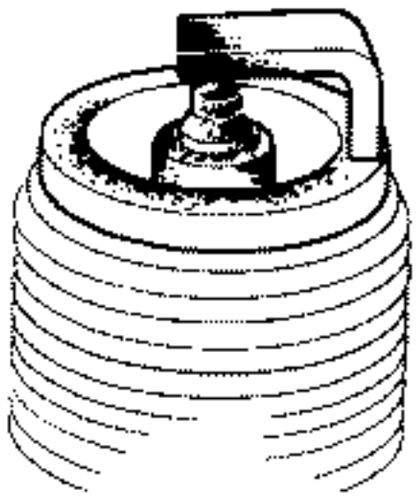

SEF156I

1

CHECK SPARK PLUGS.
Remove spark plugs and check for fouling, etc.

N.G. → Repair or replace spark plug(s).

O.K. ↓

2

CHECK EXHAUST GAS SENSOR.

1. See "M/R F/C MNT (right and left sides)" in "DATA MONITOR" mode.
2. Maintaining engine at 2,000 rpm under no-load (with engine warmed up sufficiently.), check to make sure that the monitor fluctuates between "LEAN" and "RICH" more than 5 times during 10 seconds.

RICH → LEAN → RICH →
1 time 2 times
LEAN → RICH.....

Yes → Replace exhaust gas sensor(s).

— OR —

1. Set "Exhaust gas sensor monitor" in the self-diagnostic Mode II. (See page EF & EC-49.)
2. Maintaining engine at 2,000 rpm under no-load, check that check engine light goes ON and OFF more than 5 times during 10 seconds.

No ↓

2

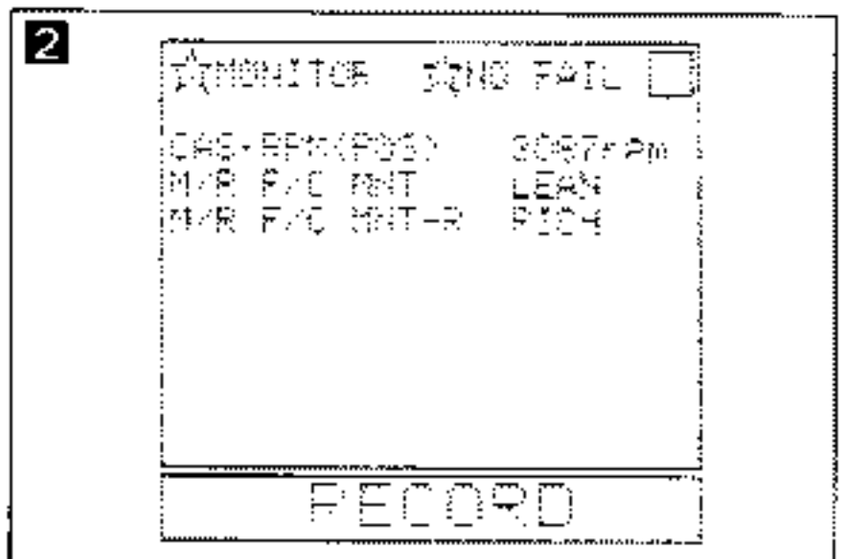

SEF160I

2

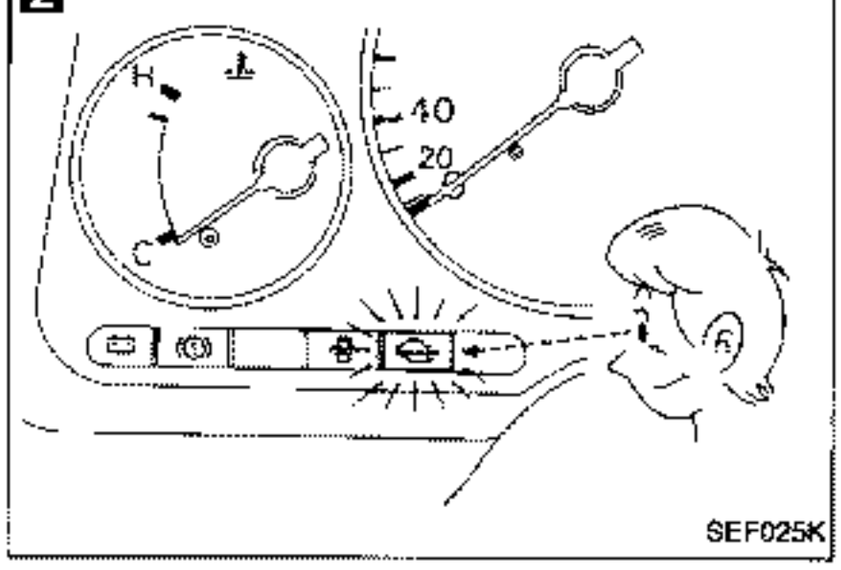

SEF025K

3

CHECK CANISTER PURGE.

1. Disconnect canister purge line hose and plug hose.
2. Perform cruise test.
3. Does the hesitation disappear?

Yes → Check purge and vacuum lines.

No ↓

(Go to Ⓐ on next page.)

3

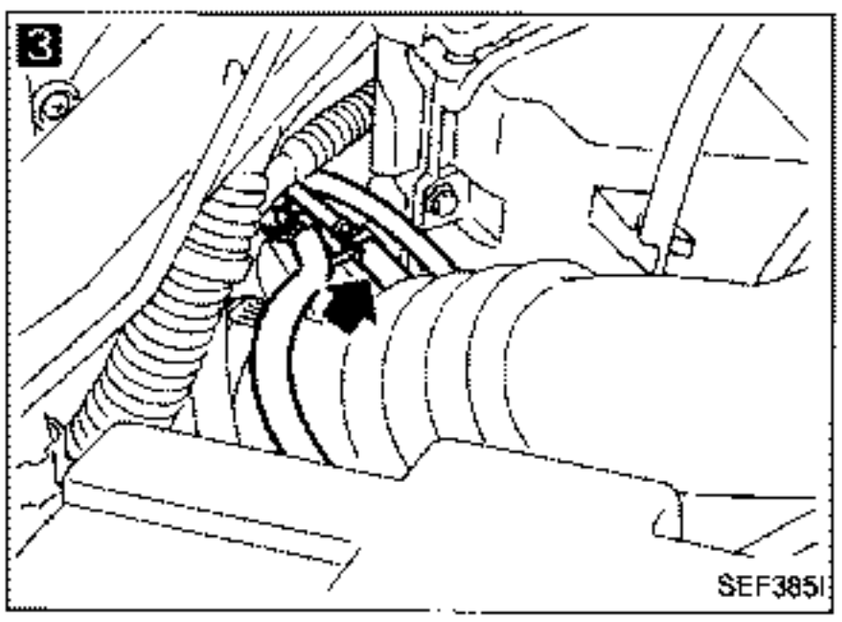

SEF385I

Diagnostic Procedure 9 — Hesitation under Normal Conditions (Cont'd)

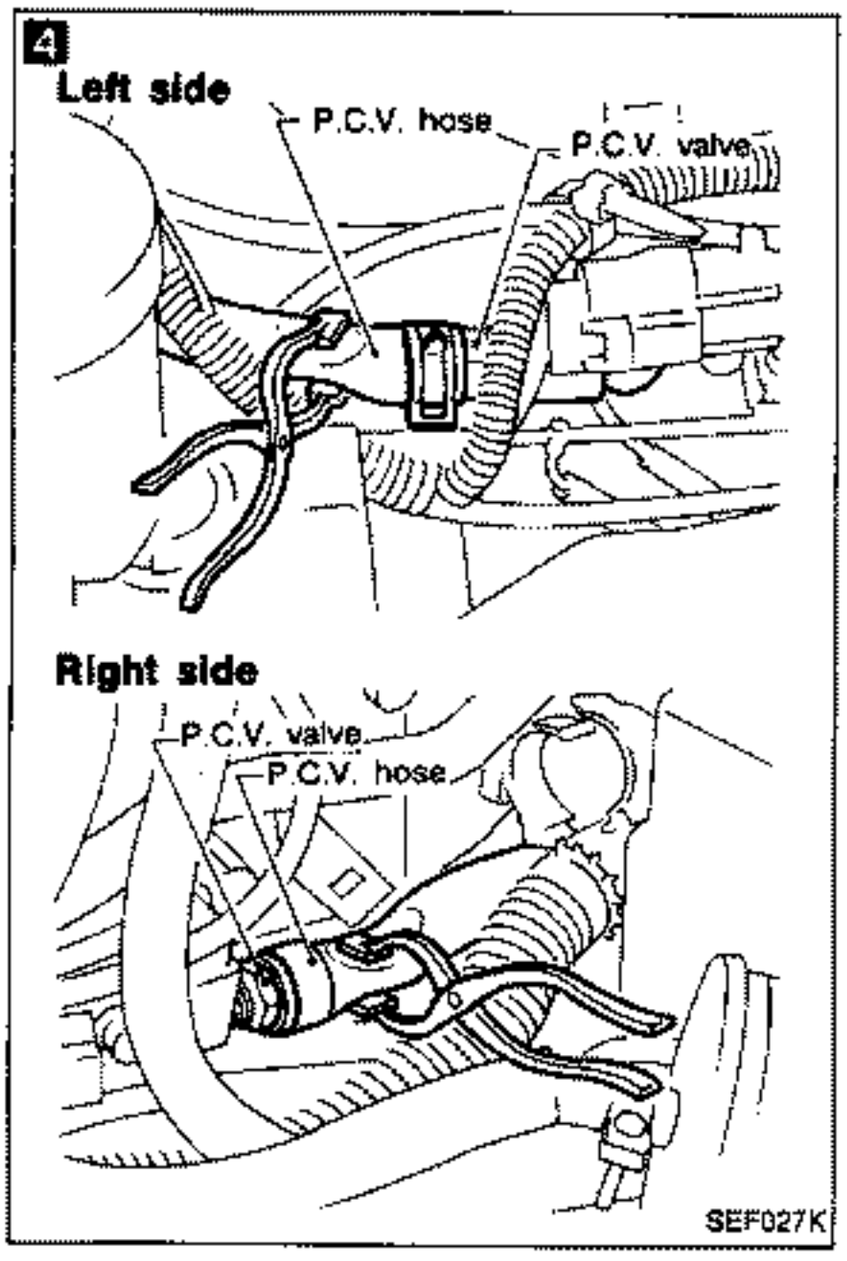

4

CHECK FOR INTAKE AIR LEAK.
When pinching blow-by hose (lowering the blow-by air supply), does the engine speed rise or the engine become more stable?

Yes → Discover air leak location and repair.

No → INSPECTION END

Diagnostic Procedure 10 — Engine Stalls when Turning

1

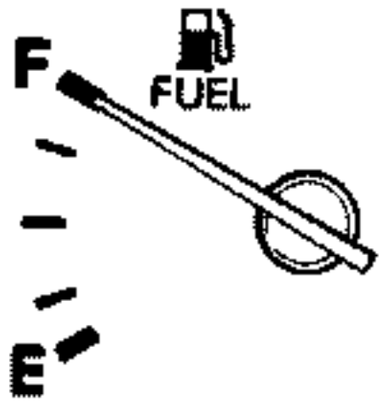

SEF386I

CHECK FUEL LEVEL.
Check to see that there is enough fuel in tank.

N.G. → Fill fuel tank with fuel.

O.K. ↓

2

PERFORM POWER BALANCE TEST.

1. Perform "POWER BALANCE" in "ACTIVE TEST" mode.
2. Is there any cylinder which does not produce a momentary engine speed drop?

— OR —

When disconnecting each injector harness connector one at a time, is there any cylinder which does not produce a momentary engine speed drop?

No → Go to **5**

Yes ↓

3

CHECK INJECTOR.

1. Remove crank angle sensor from engine. (Harness connector should remain connected.)
2. Turn ignition switch ON. (Do not start engine.)
3. When rotating crank angle sensor shaft, does each injector make an operating sound?

No → Check injector(s) and circuit(s).

Yes ↓

4

CHECK IGNITION SPARK.

1. Disconnect ignition coil assembly from collector.
2. Connect a known good spark plug to the ignition coil assembly.
3. Place end of spark plug against a suitable ground and crank engine.
4. Check for spark.

N.G. → Check ignition coil, power transistor unit and circuits. (See page EF & EC-118.)

O.K. ↓

(Go to Ⓐ on next page.)

1

SEF386I

2

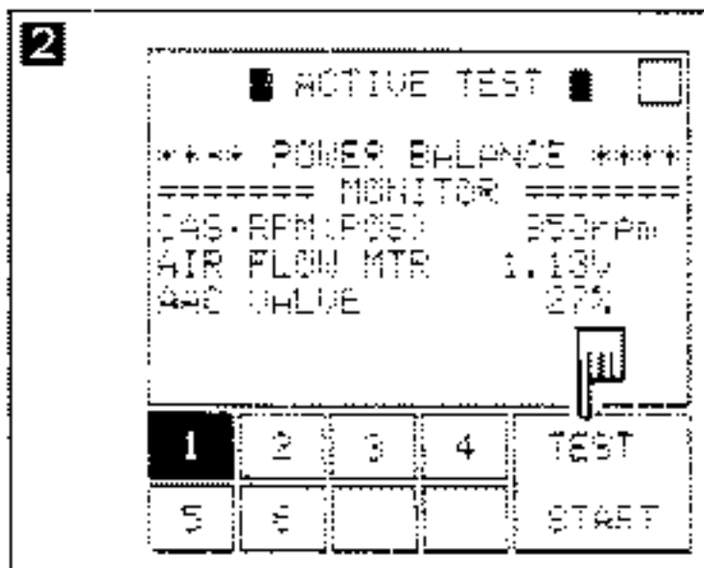

SEF157I

2

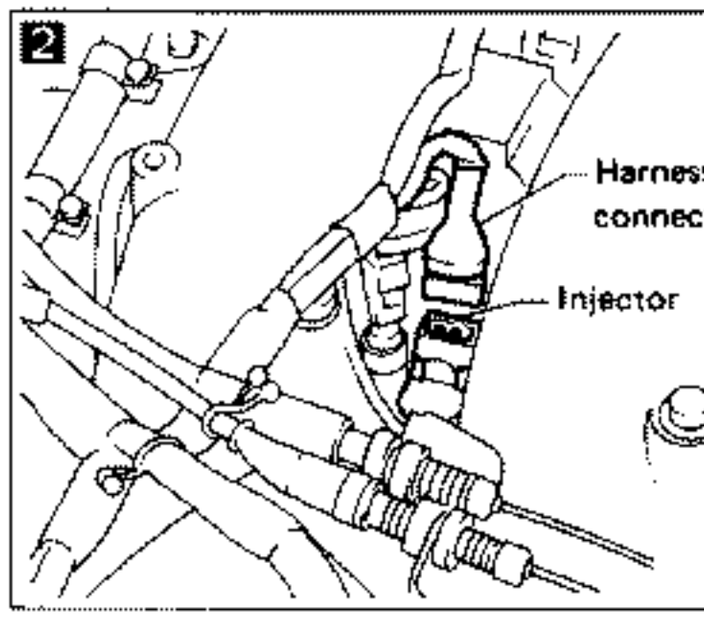

SEF158I

3

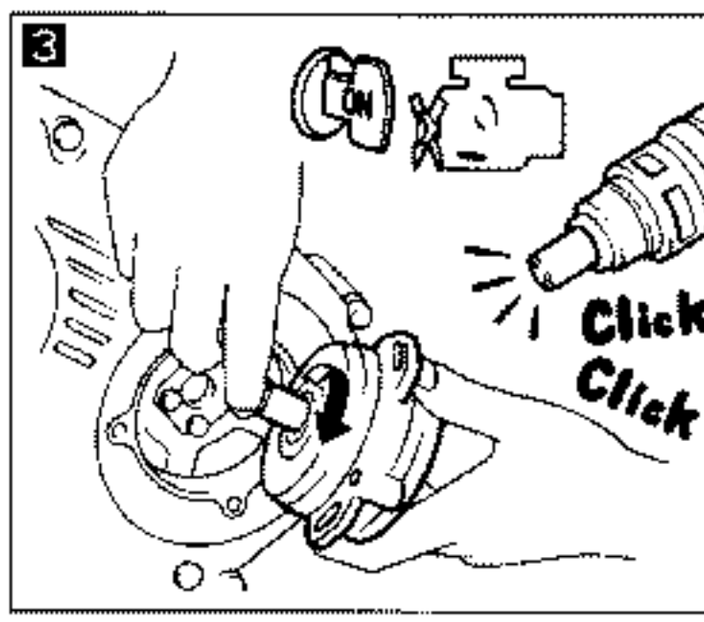

SEF159I

4

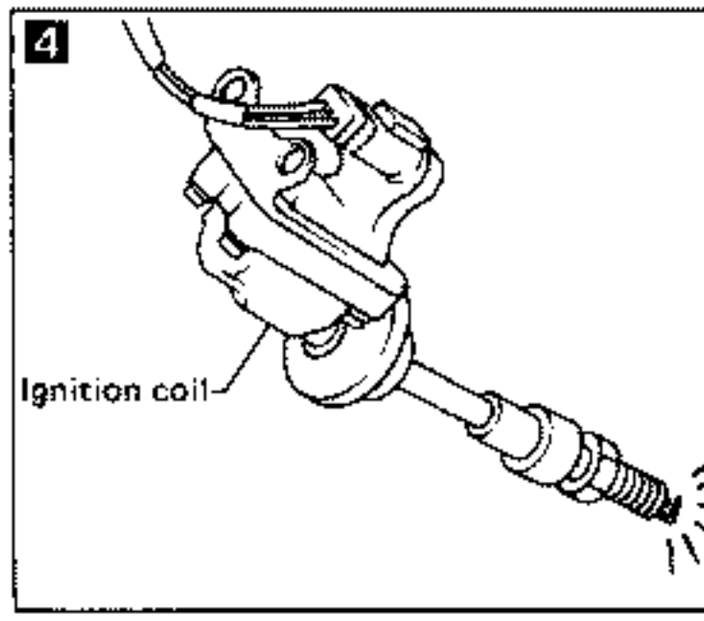

SEF155I

Diagnostic Procedure 10 — Engine Stalls when Turning (Cont'd)

5

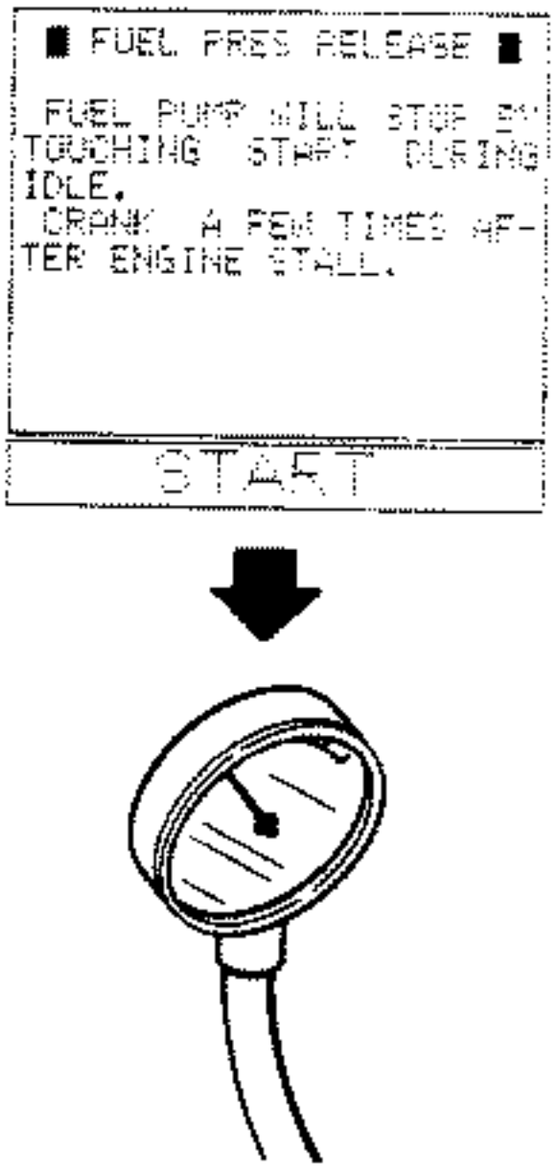

SEF204J

5

CHECK FUEL PRESSURE.

1. Perform "FUEL PRESSURE RELEASE" in "WORK SUPPORT" mode in order to release fuel pressure to zero.
2. Install fuel pressure gauge and check fuel pressure.
   At idle approx. 255 kPa (2.55 bar, 2.6 kg/cm^2, 37 psi)
   The moment throttle valve is fully open:
   approx. 304 kPa (3.04 bar, 3.1 kg/cm^2, 44 psi)

N.G. → Check fuel pressure regulator diaphragm.

— OR —

1. Release fuel pressure to zero. (Refer to page EF & EC-185.)
2. Install fuel pressure gauge and check fuel pressure.

O.K.

6

CHECK E.C.U. HARNESS CONNECTOR.
Check the E.C.U. pin terminals for damage or poor connection of E.C.U. harness connector.

N.G. → Repair or replace.

O.K.

7

CHECK E.C.U. POWER SUPPLY AND GROUND CIRCUIT.
Refer to page EF & EC-104.

N.G. → Repair or replace.

O.K.

8

TRY A KNOWN GOOD E.C.U.

INSPECTION END

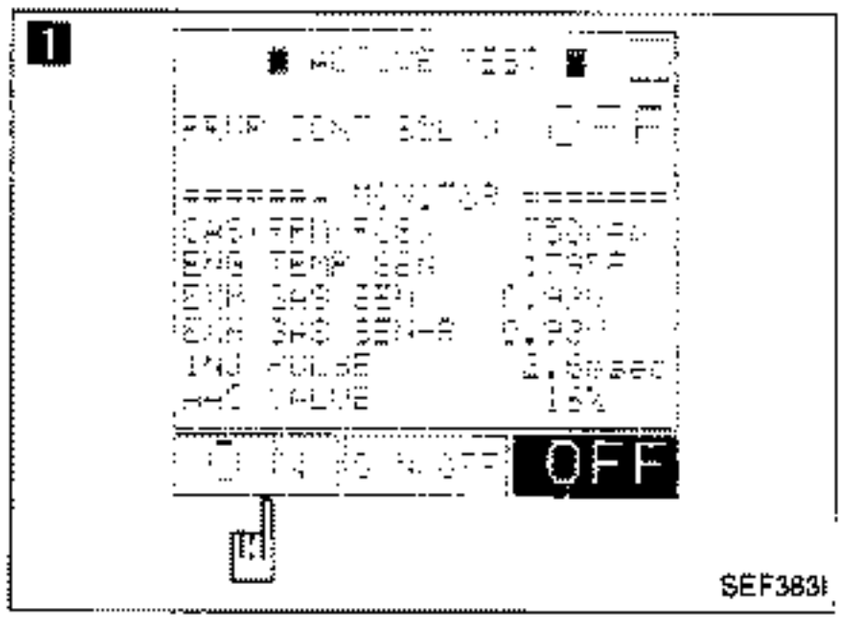

SEF383I

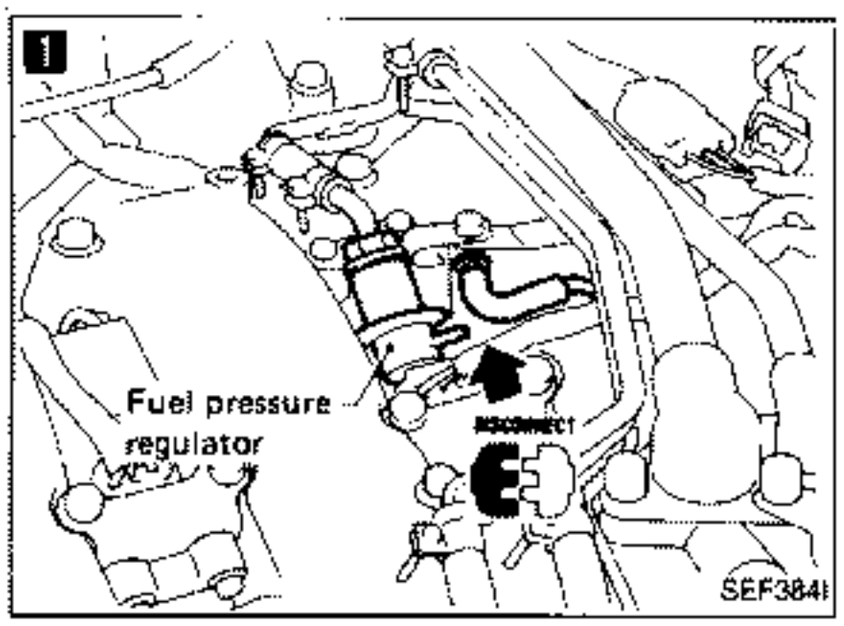

SEF384I

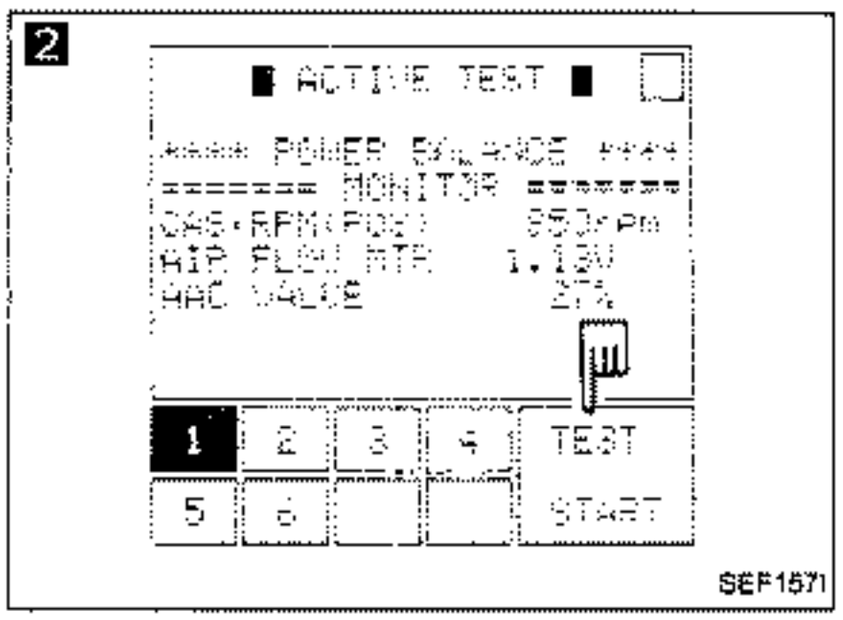

SEF157I

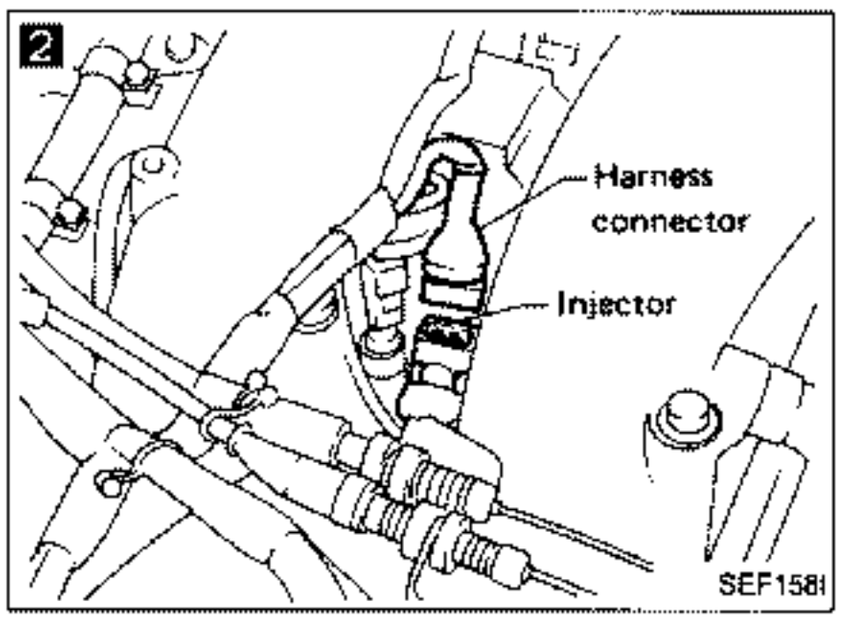

SEF158I

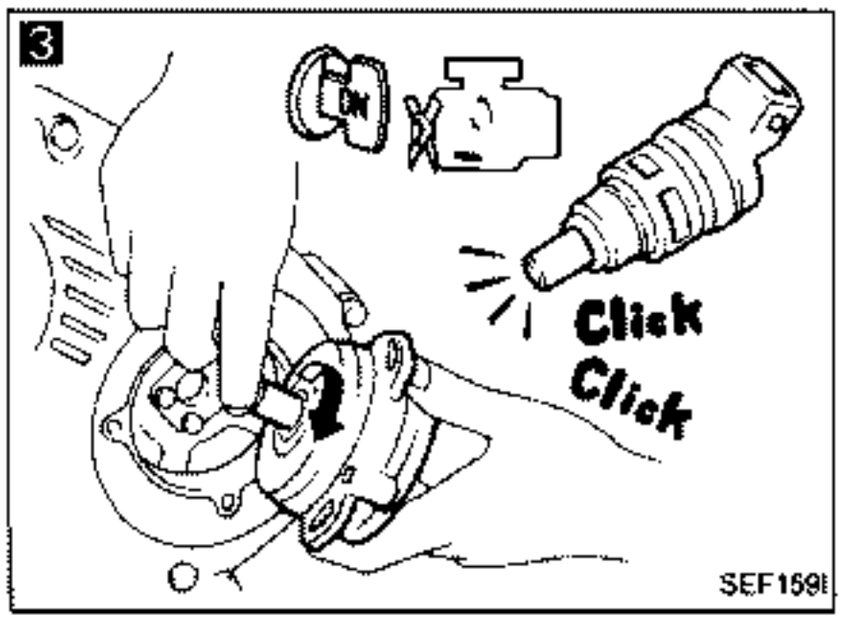

SEF159I

Diagnostic Procedure 11 — Engine Stalls when the Engine is Hot

1

CHECK FUEL VAPOR.

1. Select "PRVR CONT SOL VALVE" in "ACTIVE TEST" mode.
2. After touching "ON", perform cruise test.
3. Does the engine stall disappear?

Yes → Check fuel properties.

OR

1. Disconnect fuel pressure regulator vacuum hose and plug hose.
2. Perform cruise test.
3. Does the engine stall disappear?

No

2

PERFORM POWER BALANCE TEST.

1. Perform "POWER BALANCE" in "ACTIVE TEST" mode.
2. Is there any cylinder which does not produce a momentary engine speed drop?

No → Go to **5**.

OR

When disconnecting each injector harness connector one at a time, is there any cylinder which does not produce a momentary engine speed drop?

Yes

3

CHECK INJECTOR.

1. Remove crank angle sensor from engine. (Harness connector should remain connected.)
2. Turn ignition switch ON. (Do not start engine.)
3. When rotating crank angle sensor shaft, does each injector make an operating sound?

No → Check injector(s) and circuit(s).

Yes

(Go to Ⓐ on next page.)

Diagnostic Procedure 11 — Engine Stalls when the Engine is Hot (Cont'd)

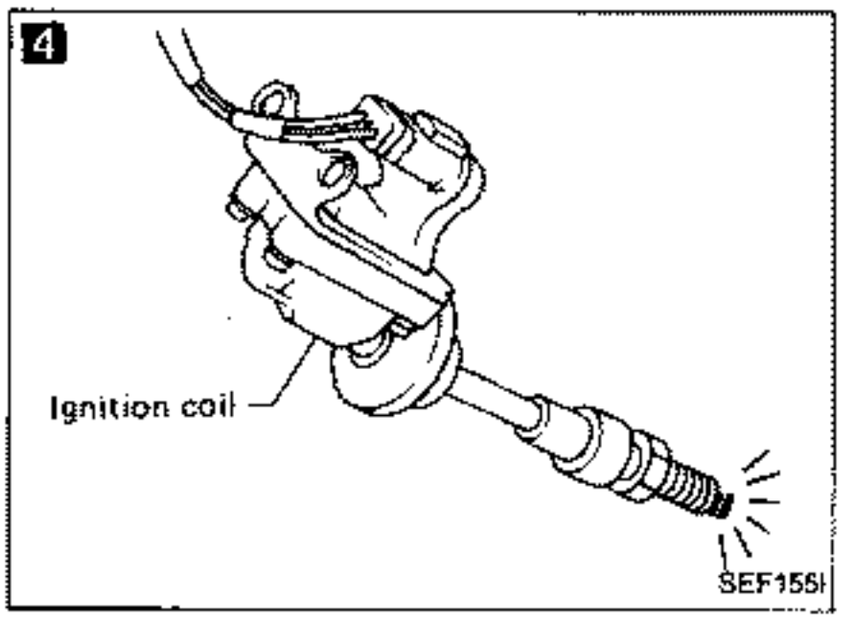

Ⓐ

4

CHECK IGNITION SPARK.
1. Disconnect ignition coil assembly from collector.
2. Connect a known good spark plug to the ignition coil assembly.
3. Place end of spark plug against a suitable ground and crank engine.
4. Check for spark.

N.G. → Check ignition coil, power transistor unit and their circuits. (See page EF & EC-118.)

O.K.

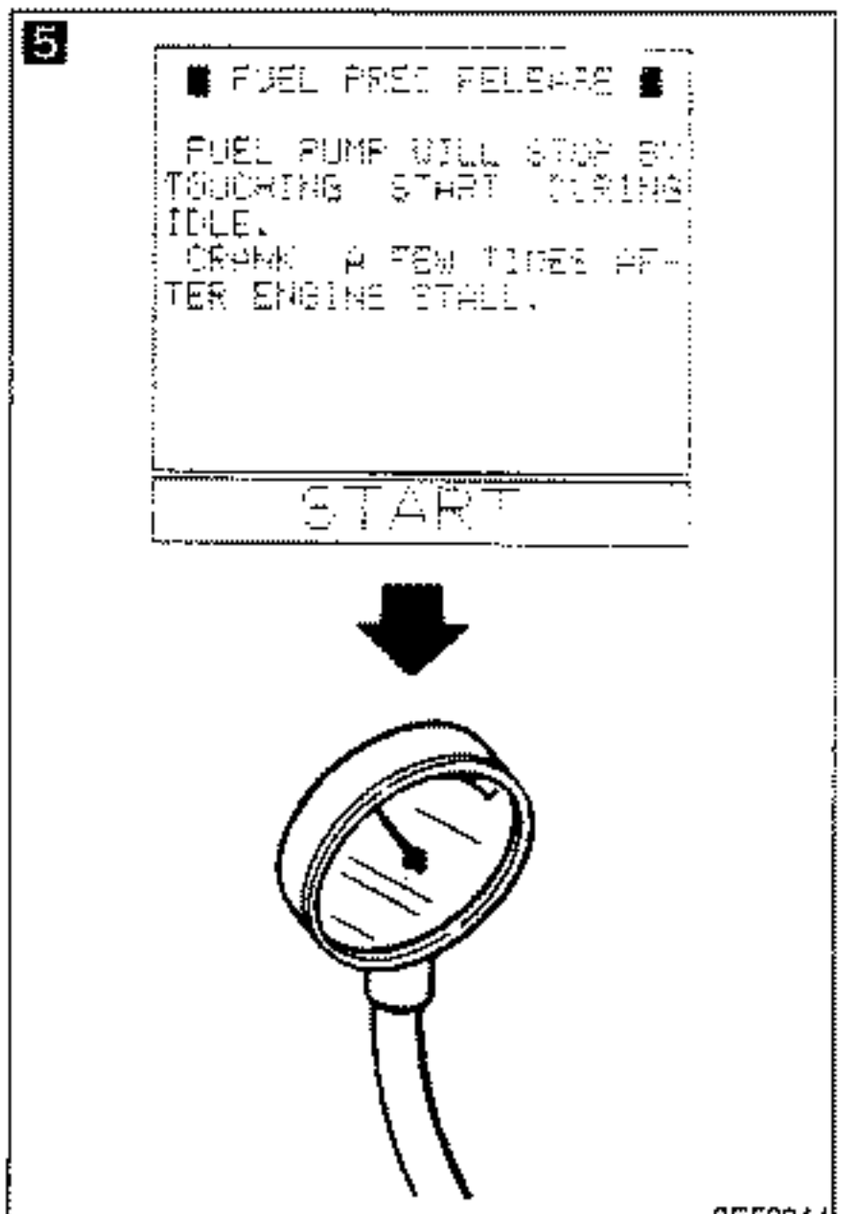

5

CHECK FUEL PRESSURE.
1. Perform "FUEL PRESSURE RELEASE" in "WORK SUPPORT" mode in order to release fuel pressure to zero.
2. Install fuel pressure gauge and check fuel pressure.
   At idle approx. 255 kPa (2.55 bar, 2.6 kg/cm², 37 psi)
   The moment throttle valve is fully open:
   approx. 304 kPa (3.04 bar, 3.1 kg/cm², 44 psi)

— OR —

1. Release fuel pressure to zero. (Refer to page EF & EC-185.)
2. Install fuel pressure gauge and check fuel pressure.

N.G. → Check fuel pressure regulator diaphragm.

O.K.

6

CHECK E.C.U. HARNESS CONNECTOR.
Check the E.C.U. pin terminals for damage or poor connection of E.C.U. harness connector.

N.G. → Repair or replace.

O.K.

7

CHECK E.C.U. POWER SUPPLY AND GROUND CIRCUIT.
Refer to page EF & EC-104.

N.G. → Repair or replace.

O.K.

8

TRY A KNOWN GOOD E.C.U.

Trouble is fixed. → Replace E.C.U.

Trouble is not fixed.

9

CHECK TIMING BELT FOR PROPER INSTALLATION.

N.G. → Replace timing belt.

O.K.

INSPECTION END

Diagnostic Procedure 12 — Engine Stalls when the Engine is Cold

1

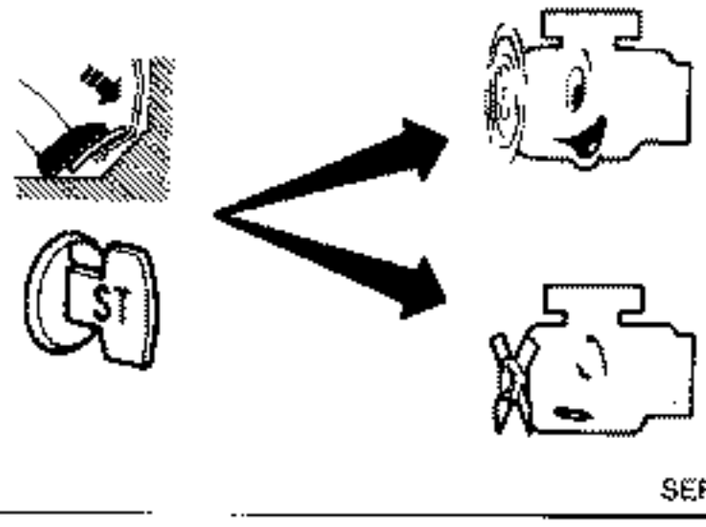

SEF382I

CHECK AIR REGULATOR AND A.A.C. VALVE.
When the engine is cold, can you start the engine when pressing accelerator pedal fully?

N.G. → Check A.A.C. valve, air regulator and circuits. (See pages EF & EC-156, 154.)

O.K.

2

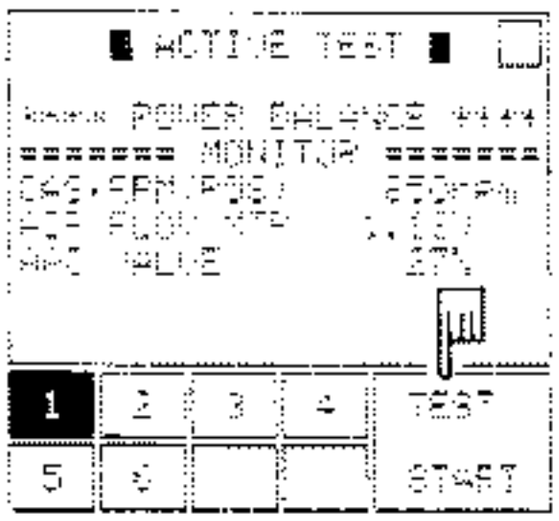

SEF157I

PERFORM POWER BALANCE TEST.
1. Perform "POWER BALANCE" in "ACTIVE TEST" mode.
2. Is there any cylinder which does not produce a momentary engine speed drop?

— OR —

When disconnecting each injector harness connector one at a time, is there any cylinder which does not produce a momentary engine speed drop?

N.G. → Go to **6**.

O.K.

2

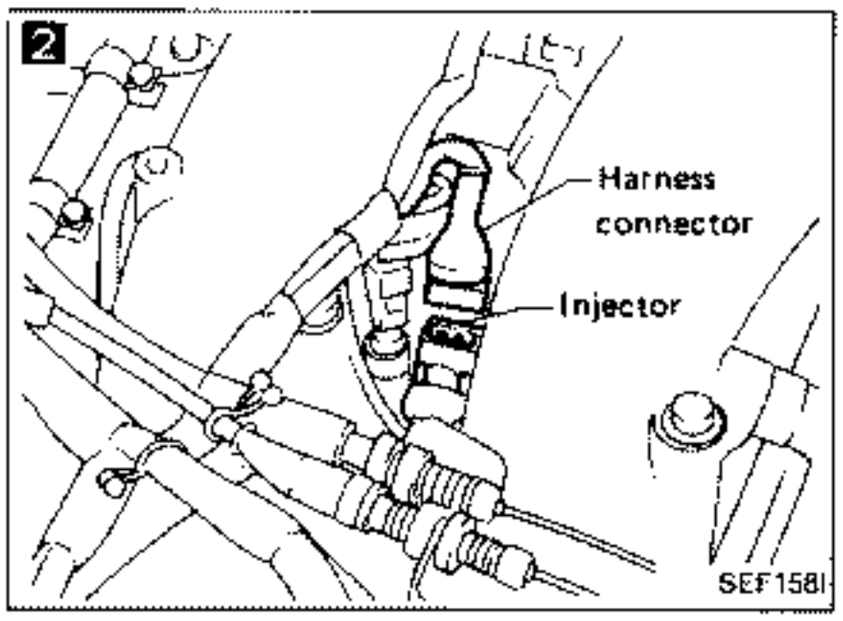

SEF158I

3

CHECK INJECTOR.
1. Remove crank angle sensor from engine. (Harness connector should remain connected.)
2. Turn ignition switch ON. (Do not start engine.)
3. When rotating crank angle sensor shaft, does each injector make an operating sound?

N.G. → Check injector(s) and circuit(s).

O.K.

3

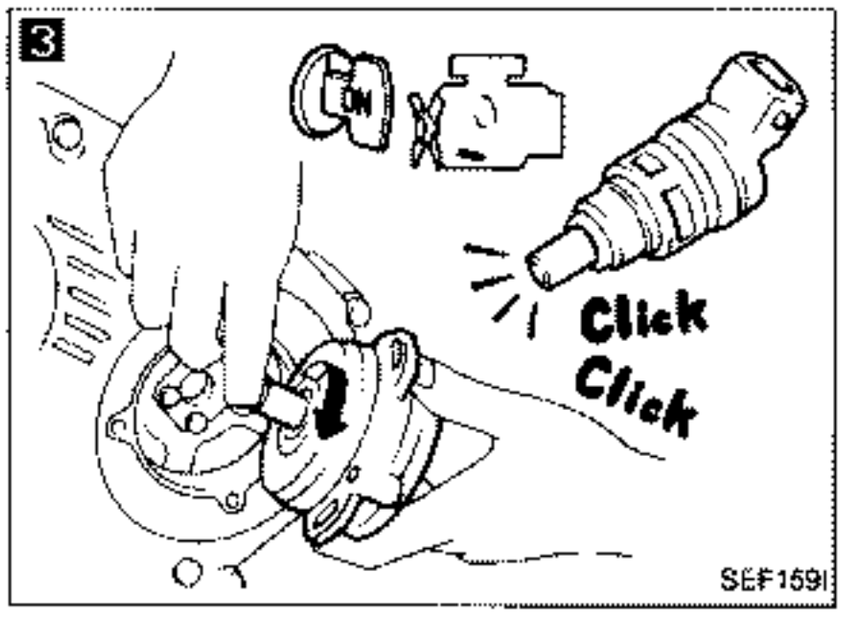

SEF159I

4

CHECK IGNITION SPARK.
1. Disconnect ignition coil assembly from collector.
2. Connect a known good spark plug to the ignition coil assembly.
3. Place end of spark plug against a suitable ground and crank engine.
4. Check for spark.

N.G. → Check ignition coil, power transistor unit and circuits. (See page EF & EC-118.)

O.K.

4

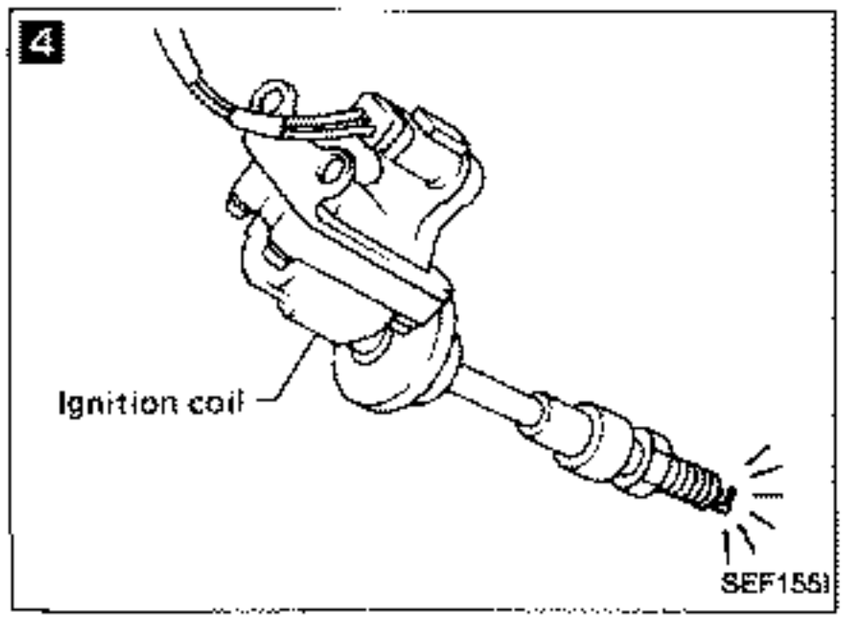

SEF155I

(Go to Ⓐ on next page.)

Diagnostic Procedure 12 — Engine Stalls when the Engine is Cold (Cont'd)

5

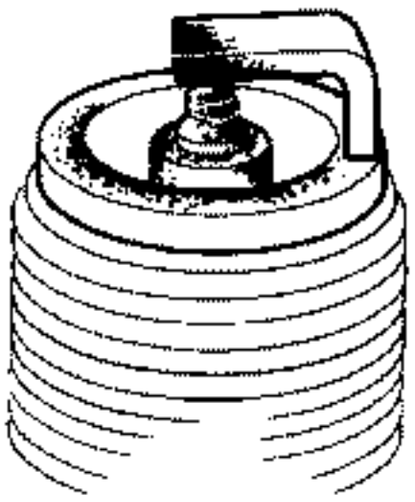

SEF156I

6

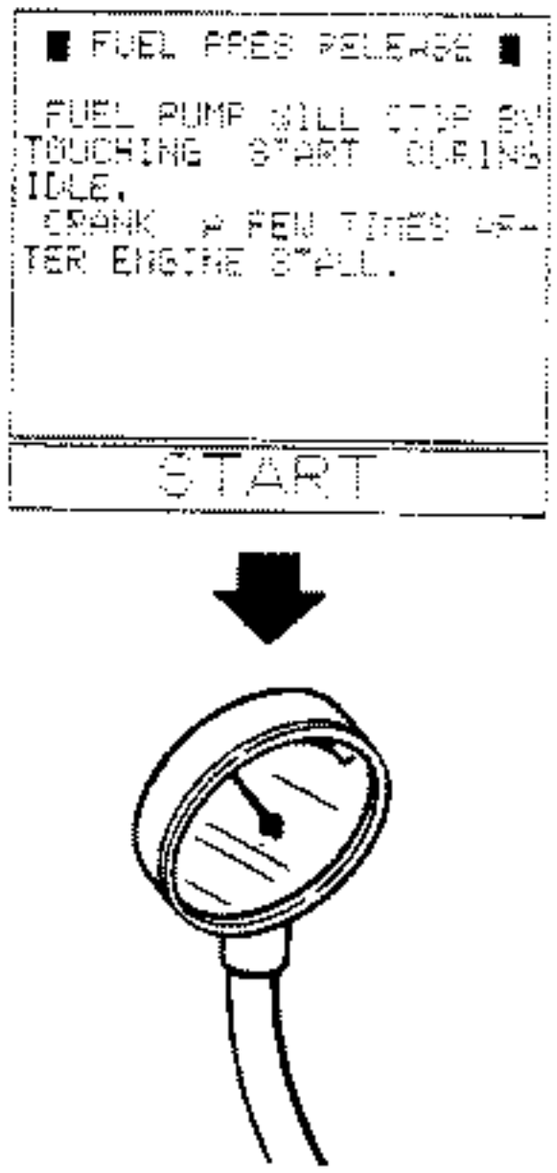

SEF204J

Ⓐ

5 **CHECK SPARK PLUGS.**
Remove the spark plugs and check for fouling, etc.

N.G. → Repair or replace spark plug(s).

O.K. ↓

6 **CHECK FUEL PRESSURE.**

1. Perform "FUEL PRESSURE RELEASE" in "WORK SUPPORT" mode in order to release fuel pressure to zero.
2. Install fuel pressure gauge and check fuel pressure.
   At idle approx. 255 kPa (2.55 bar, 2.6 kg/cm², 37 psi)
   The moment throttle valve is fully open:
   approx. 304 kPa (3.04 bar, 3.1 kg/cm², 44 psi)

N.G. → Check fuel pressure regulator diaphragm.

— OR —

1. Release fuel pressure to zero. (Refer to page EF & EC-185.)
2. Install fuel pressure gauge and check fuel pressure.

O.K. ↓

7 **CHECK E.C.U. HARNESS CONNECTOR.**
Check the E.C.U. pin terminals for damage or poor connection of E.C.U. harness connector.

N.G. → Repair or replace.

O.K. ↓

8 **CHECK E.C.U. POWER SUPPLY AND GROUND CIRCUIT.**
Refer to page EF & EC-104.

N.G. → Repair or replace.

O.K. ↓

9 **TRY A KNOWN GOOD E.C.U.**

↓

INSPECTION END

Diagnostic Procedure 13 — Engine Stalls when Stepping on the Accelerator Momentarily

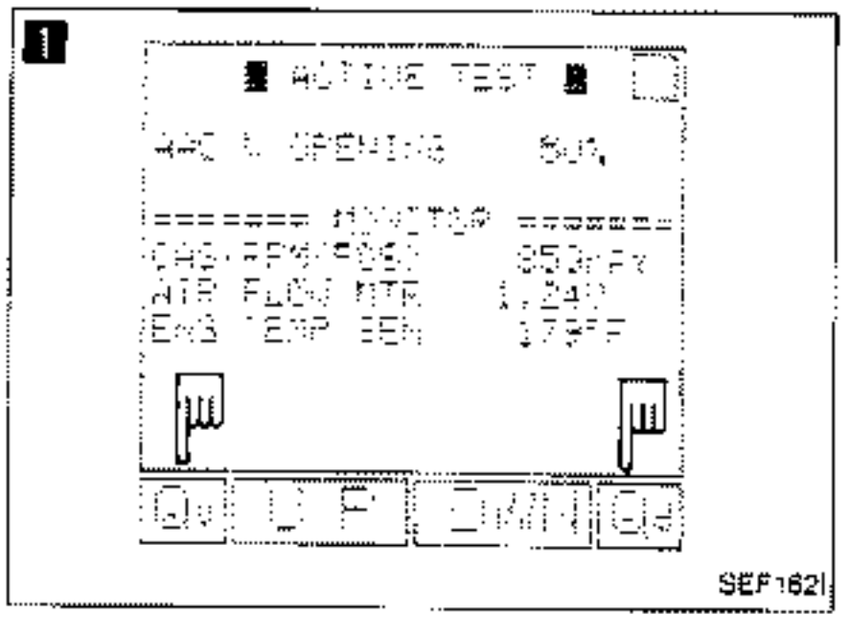

1

CHECK A.A.C. VALVE.

1. Select "A.A.C. VALVE OPENING" in "ACTIVE TEST" mode.
2. When touching "Qu" and "Qd", does the engine speed change according to the percent of A.A.C. valve opening?

No → Check A.A.C. valve and circuit. (See page EF & EC-156.)

— OR —

When disconnecting A.A.C. valve harness connector, does the engine speed drop?

Yes ↓

2

PERFORM POWER BALANCE TEST.

1. Perform "POWER BALANCE" in "ACTIVE TEST" mode.
2. Is there any cylinder which does not produce a momentary engine speed drop?

No → Go to **5**.

— OR —

When disconnecting each injector harness connector one at a time, is there any cylinder which does not produce a momentary engine speed drop?

Yes ↓

3

CHECK INJECTOR.

1. Remove crank angle sensor from engine. (Harness connector should remain connected.)
2. Turn ignition switch ON. (Do not start engine.)
3. When rotating crank angle sensor shaft, does each injector make an operating sound?

No → Check injector(s) and their circuit(s).

Yes ↓

(Go to Ⓐ on next page.)

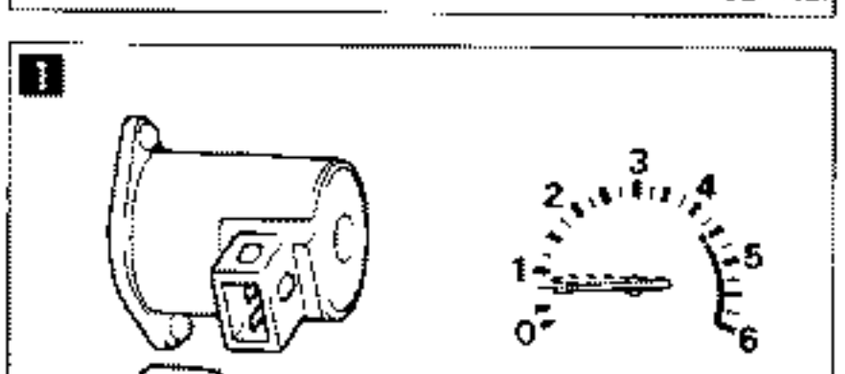

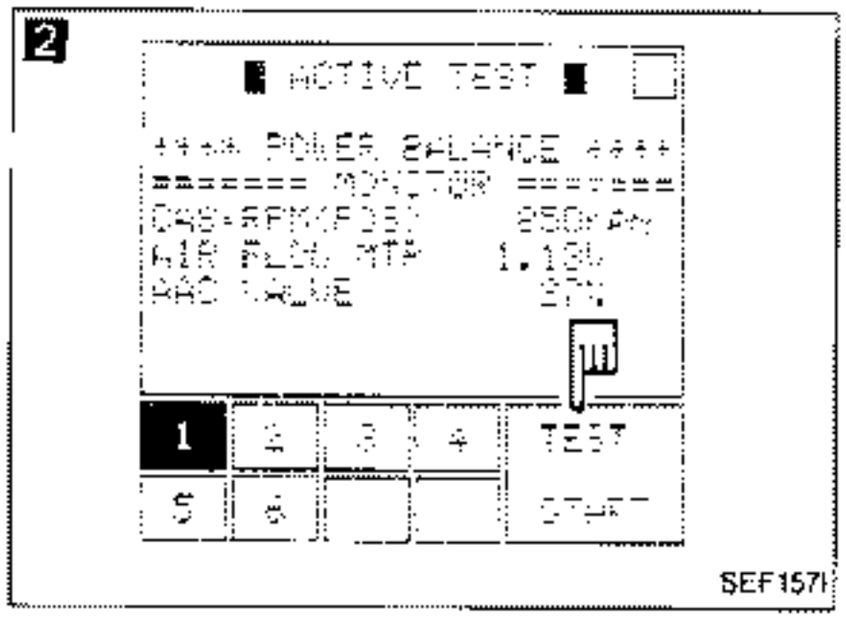

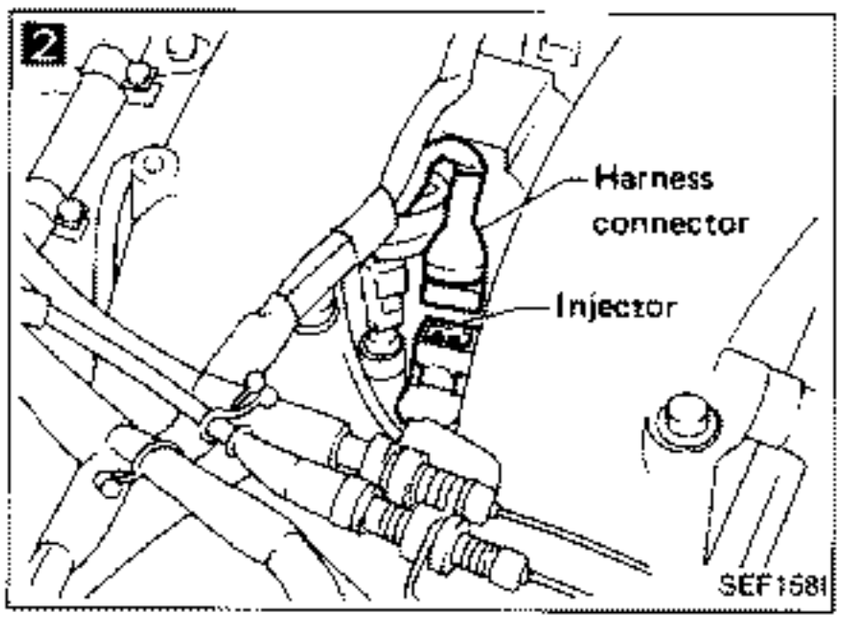

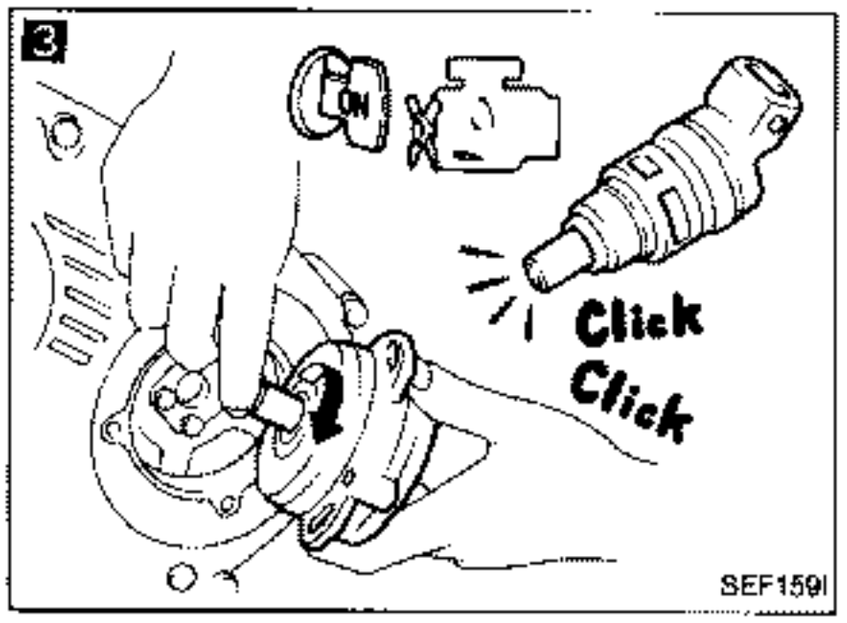

Diagnostic Procedure 13 — Engine Stalls when Stepping on the Accelerator Momentarily (Cont'd)

4

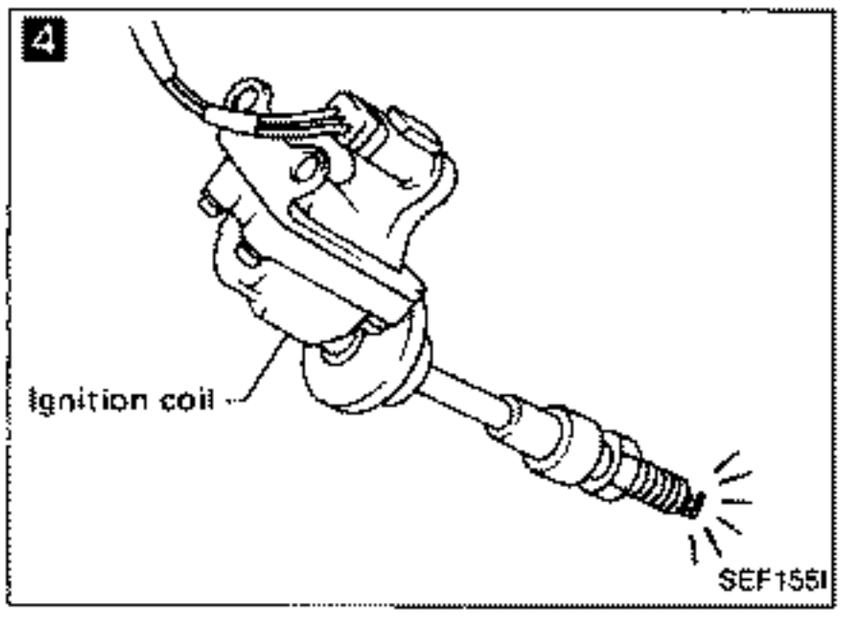

Ⓐ

4

CHECK IGNITION SPARK.

1. Disconnect ignition coil assembly from collector.
2. Connect a known good spark plug to the ignition coil assembly.
3. Place end of spark plug against a suitable ground and crank engine.
4. Check for spark.

N.G. → Check ignition coil, power transistor unit and their circuits. (See page EF & EC-118.)

O.K.

5

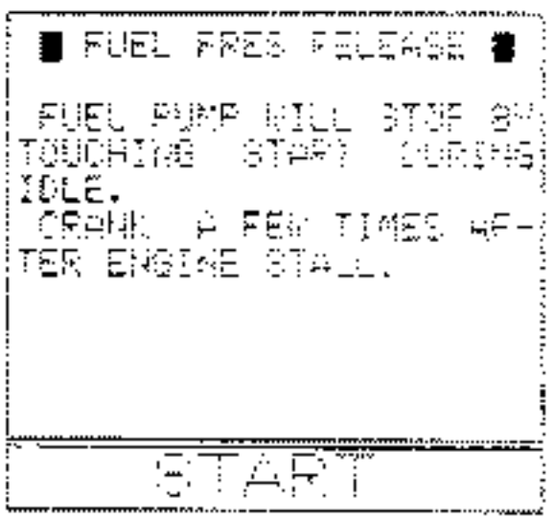

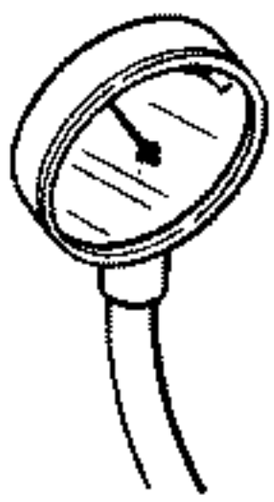

SEF204J

5

CHECK FUEL PRESSURE.

1. Perform "FUEL PRESSURE RELEASE" in "WORK SUPPORT" mode in order to release fuel pressure to zero.
2. Install fuel pressure gauge and check fuel pressure.
   At idle approx. 255 kPa (2.55 bar, 2.6 kg/cm², 37 psi)
   The moment throttle valve is fully open:
   approx. 304 kPa (3.04 bar, 3.1 kg/cm², 44 psi)

N.G. → Check fuel pressure regulator diaphragm.

OR

1. Release fuel pressure to zero. (Refer to page EF & EC-185.)
2. Install fuel pressure gauge and check fuel pressure.

O.K.

6

CHECK E.C.U. HARNESS CONNECTOR.
Check the E.C.U. pin terminals for damage or poor connection of E.C.U. harness connector.

N.G. → Repair or replace.

O.K.

7

CHECK E.C.U. POWER SUPPLY AND GROUND CIRCUIT.
Refer to page EF & EC-104.

N.G. → Repair or replace.

O.K.

8

TRY A KNOWN GOOD E.C.U.

INSPECTION END

1

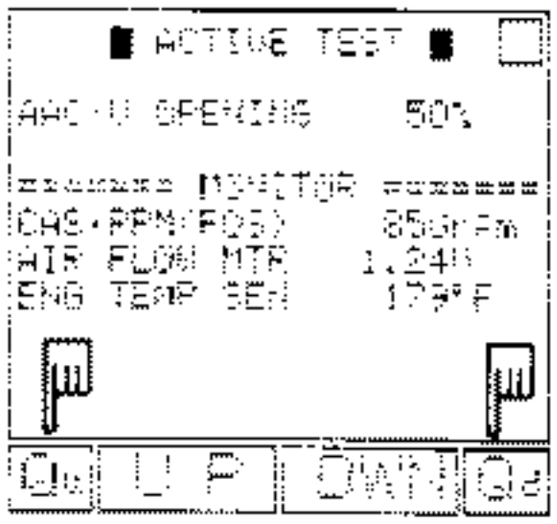

SEF162I

1

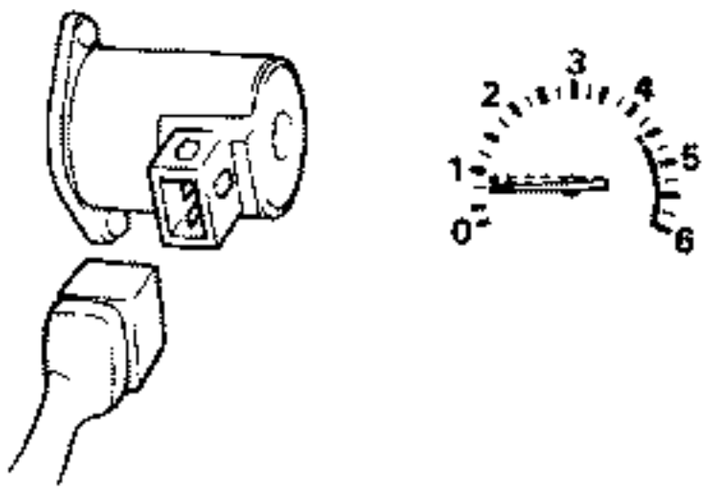

SEF146I

2

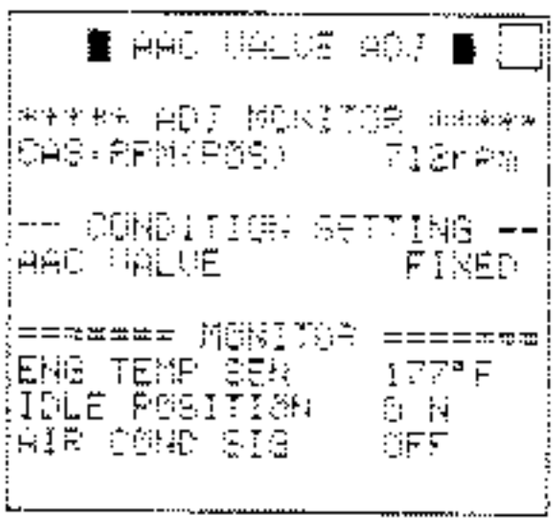

SEF145I

2

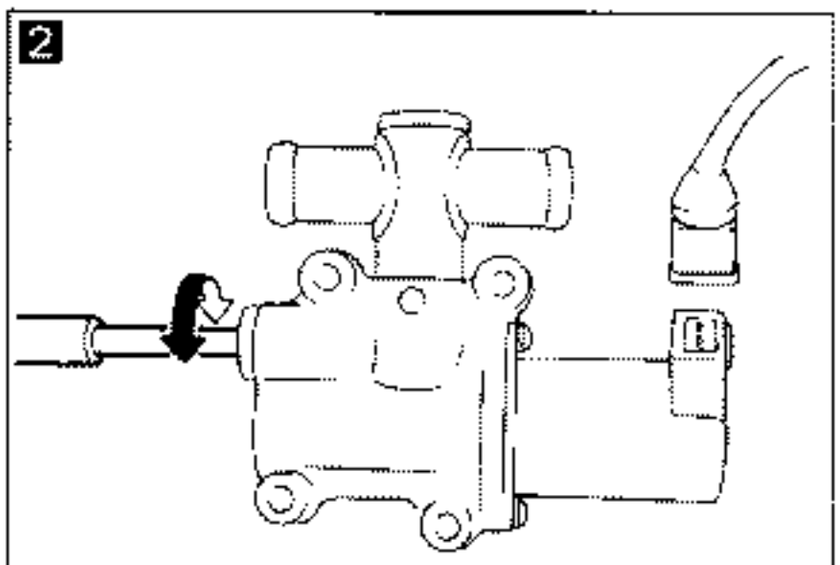

SEF161I

Diagnostic Procedure 14 — Engine Stalls after Decelerating

1

CHECK A.A.C. VALVE.

1. Select "A.A.C. VALVE OPENING" in "ACTIVE TEST" mode.
2. When touching "Qu" and "Qd", does the engine speed change according to the percent of A.A.C. valve opening?

No → Check A.A.C. valve and circuit. (See page EF & EC-156.)

— OR —

When disconnecting A.A.C. valve harness connector, does the engine speed drop?

Yes ↓

2

CHECK IDLE ADJ. SCREW CLOGGING.

1. Perform "A.A.C. VALVE ADJ" in "WORK SUPPORT" mode.
2. Can you set engine rpm as follows by turning idle adjusting screw?

	A/T*	M/T
Non-turbo	720±50 rpm	650±50 rpm
Turbo	700±50 rpm	

*: in "N" position

No → Check for IAS clogging or throttle chamber clogging.

— OR —

1. Disconnect A.A.C. valve harness connector
2. Can you set engine rpm as follows by turning idle adjusting screw?

	A/T*	M/T
Non-turbo	720±50 rpm	650±50 rpm
Turbo	700±50 rpm	

*: in "N" position

Yes ↓

(Go to Ⓐ on next page.)

Diagnostic Procedure 14 — Engine Stalls after Decelerating (Cont'd)

3

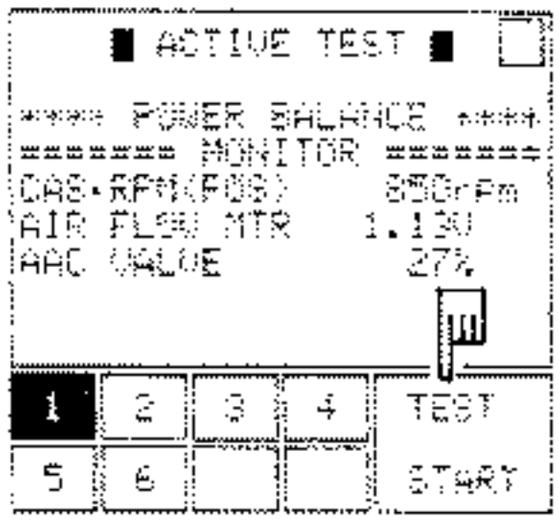

SEF157I

3

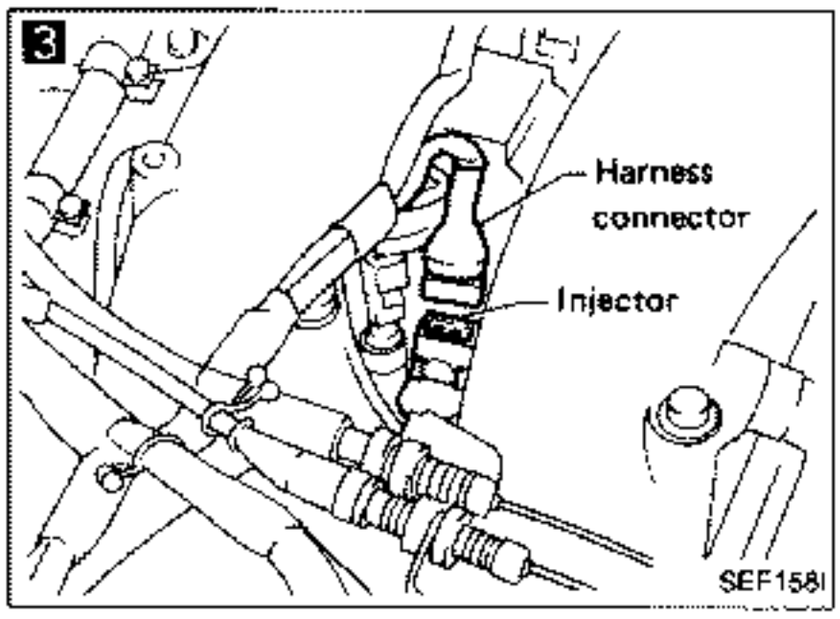

SEF158I

4

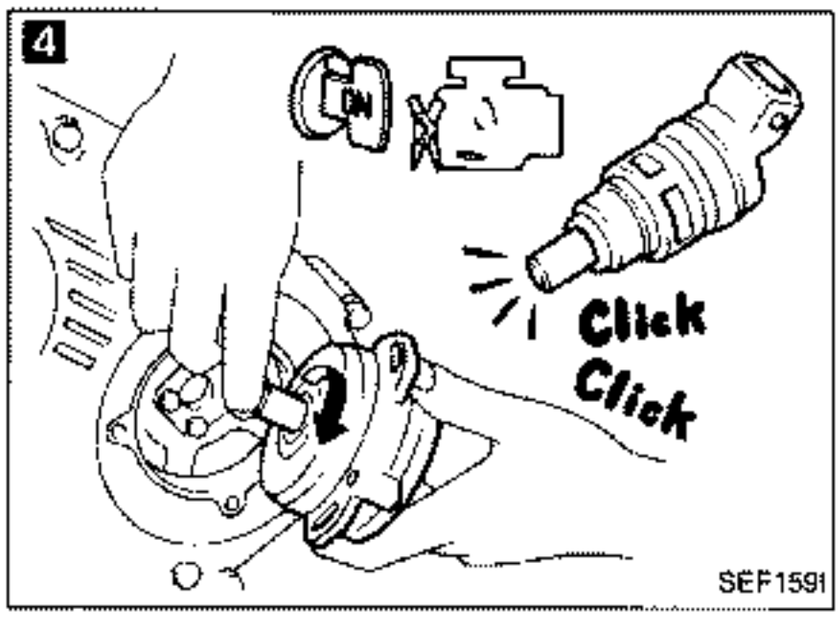

SEF159I

5

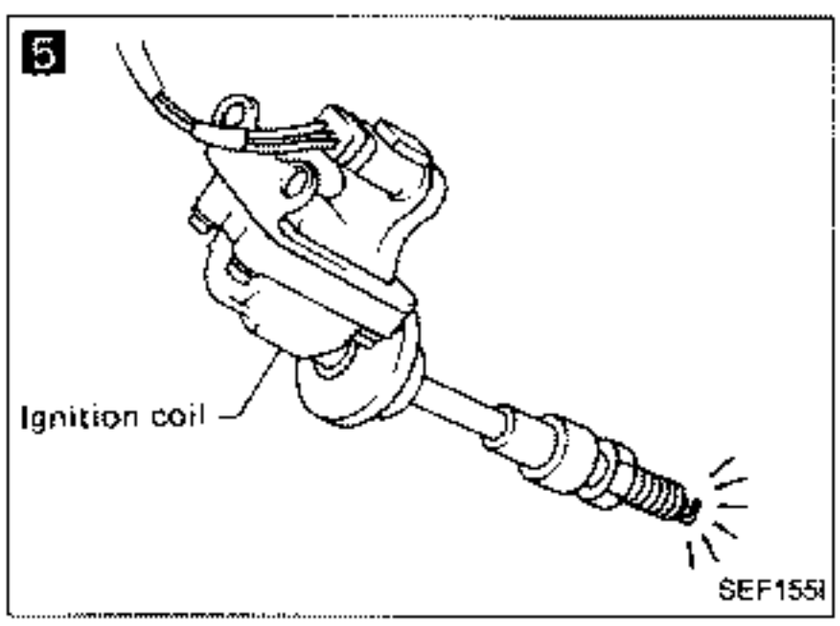

SEF155I

(A)

3

PERFORM POWER BALANCE TEST.

1. Perform "POWER BALANCE" in "ACTIVE TEST" mode.
2. Is there any cylinder which does not produce a momentary engine speed drop?

No → Go to 6.

— OR —

When disconnecting each injector harness connector one at a time, is there any cylinder which does not produce a momentary engine speed drop?

Yes ↓

4

CHECK INJECTOR.

1. Remove crank angle sensor from engine. (Harness connector should remain connected.)
2. Turn ignition switch ON. (Do not start engine.)
3. When rotating crank angle sensor shaft, does each injector make an operating sound?

No → Check injector(s) and circuit(s).

Yes ↓

5

CHECK IGNITION SPARK.

1. Disconnect ignition coil assembly from collector.
2. Connect a known good spark plug to the ignition coil assembly.
3. Place end of spark plug against a suitable ground and crank engine.
4. Check for spark.

N.G. → Check ignition coil, power transistor unit and circuits. (See page EF & EC-118.)

O.K. ↓

(Go to (B) on next page.)

Diagnostic Procedure 14 — Engine Stalls after Decelerating (Cont'd)

6

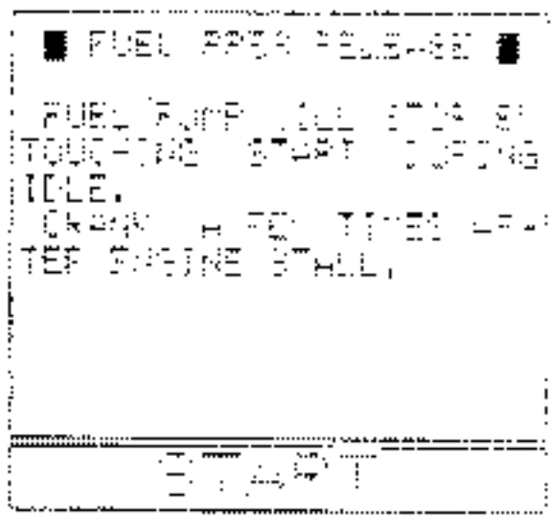

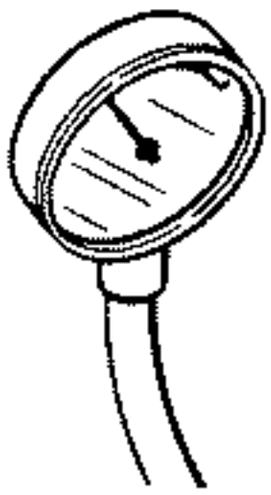

SEF204J

7

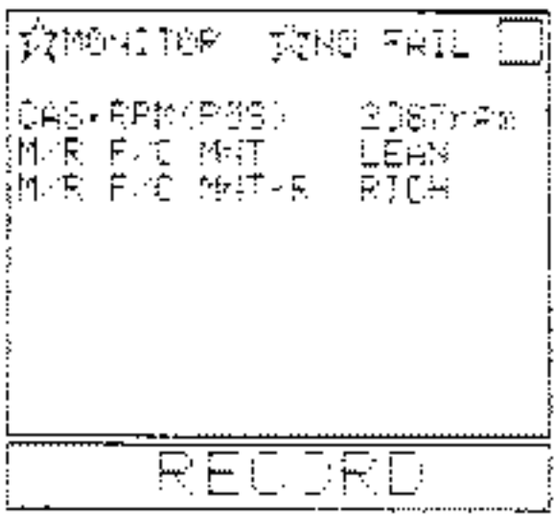

SEF160I

7

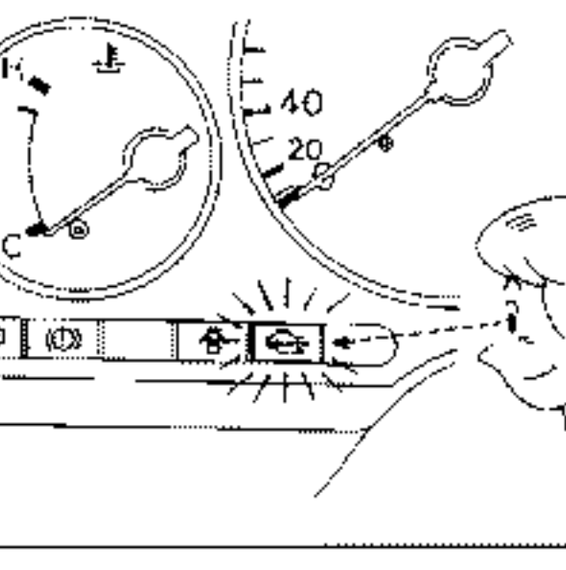

SEF025K

Ⓑ

6

CHECK FUEL PRESSURE.

1. Perform "FUEL PRESSURE RELEASE" in "WORK SUPPORT" mode in order to release fuel pressure to zero.
2. Install fuel pressure gauge and check fuel pressure.
   At idle approx. 255 kPa (2.55 bar, 2.6 kg/cm², 37 psi)
   The moment throttle valve is fully open:
   approx. 304 kPa (3.04 bar, 3.1 kg/cm², 44 psi)

N.G. → Check fuel pressure regulator diaphragm.

— OR —

1. Release fuel pressure to zero. (Refer to page EF & EC-185.)
2. Install fuel pressure gauge and check fuel pressure.

O.K.

7

CHECK EXHAUST GAS SENSOR.

1. See "M/R F/C MNT (right and left sides)" in "DATA MONITOR" mode.
2. Maintaining engine at 2,000 rpm under no-load (with engine warmed up sufficiently.), check to make sure that the monitor fluctuates between "LEAN" and "RICH" more than 5 times during 10 seconds.
   RICH → LEAN → RICH →
   1 time 2 times
   LEAN → RICH.....

N.G. → Replace exhaust gas sensor(s).

— OR —

1. Set "Exhaust gas sensor monitor" in the self-diagnostic Mode II. (See page EF & EC-49.)
2. Maintaining engine at 2,000 rpm under no-load, check that check engine light goes ON and OFF more than 5 times during 10 seconds.

O.K.

(Go to Ⓒ on next page.)

Diagnostic Procedure 14 — Engine Stalls after Decelerating (Cont'd)

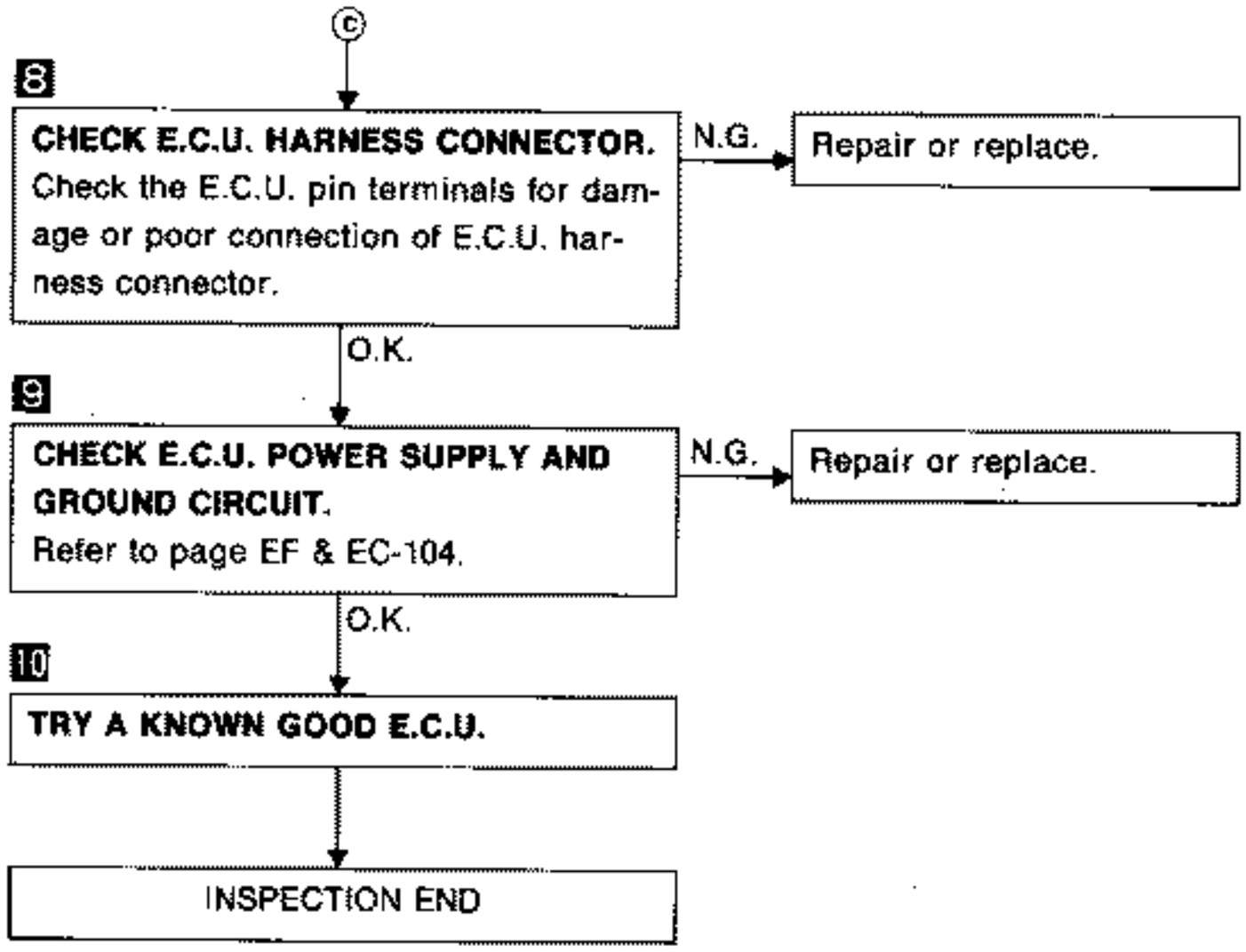

1

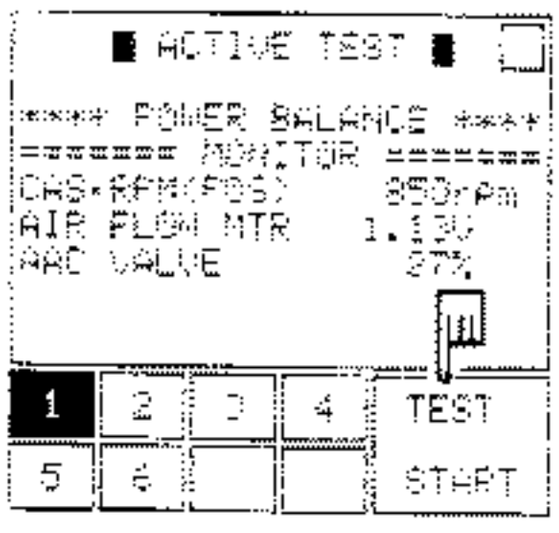

SEF157I

1

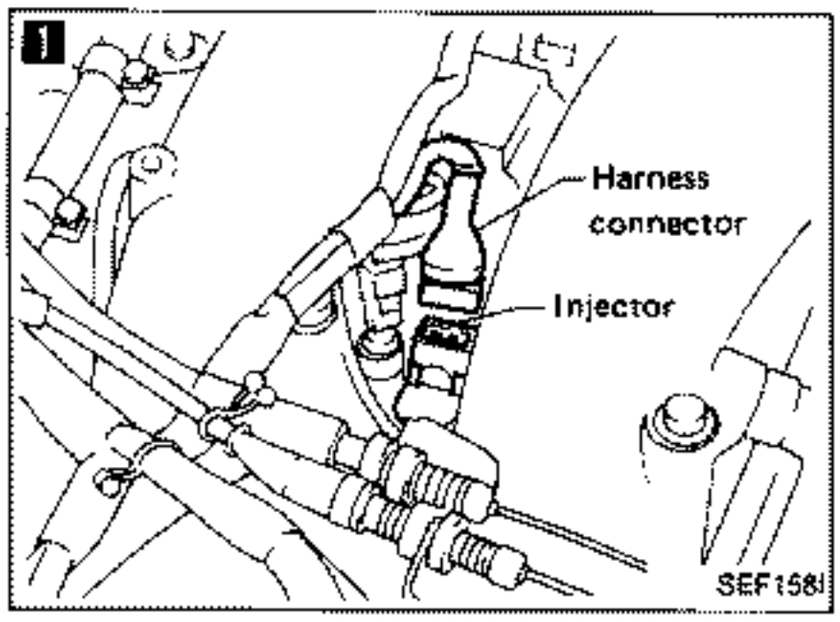

SEF158I

2

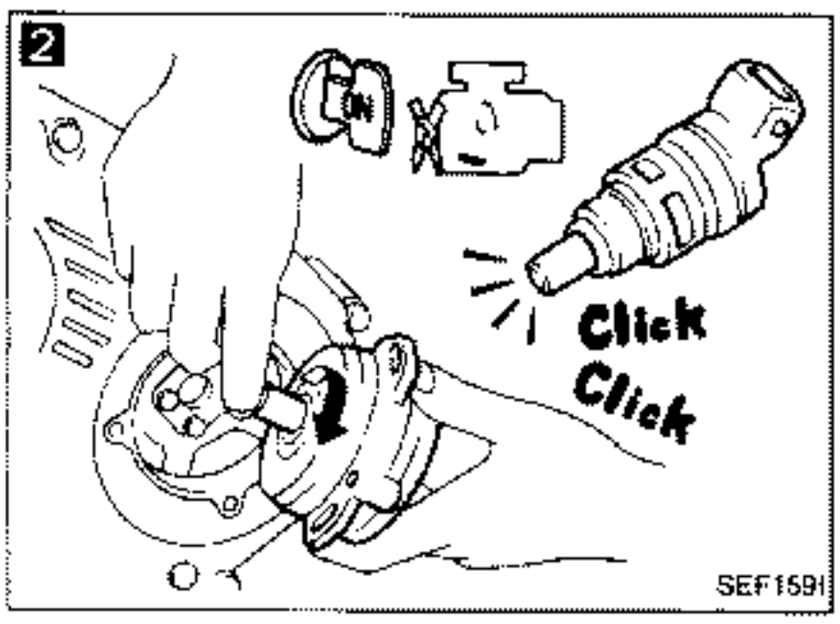

SEF159I

3

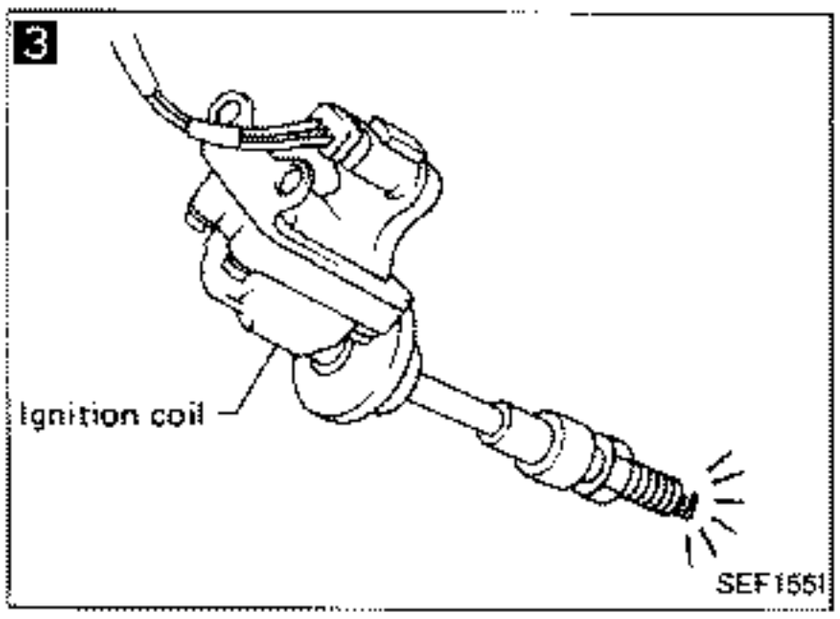

SEF155I

Diagnostic Procedure 15 — Engine Stalls when Accelerating or Cruising

1

PERFORM POWER BALANCE TEST.

1. Perform "POWER BALANCE" in "ACTIVE TEST" mode.
2. Is there any cylinder which does not produce a momentary engine speed drop?

No → Go to 4.

OR

When disconnecting each injector harness connector one at a time, is there any cylinder which does not produce a momentary engine speed drop?

Yes ↓

2

CHECK INJECTOR.

1. Remove crank angle sensor from engine. (Harness connector should remain connected.)
2. Turn ignition switch ON. (Do not start engine.)
3. When rotating crank angle sensor shaft, does each injector make an operating sound?

No → Check injector(s) and circuit(s).

Yes ↓

3

CHECK IGNITION SPARK.

1. Disconnect ignition coil assembly from collector.
2. Connect a known good spark plug to the ignition coil assembly.
3. Place end of spark plug against a suitable ground and crank engine.
4. Check for spark.

N.G. → Check ignition coil, power transistor unit and circuits. (See page EF & EC-118.)

O.K. ↓

(Go to Ⓐ on next page.)

Diagnostic Procedure 15 — Engine Stalls when Accelerating or Cruising (Cont'd)

4

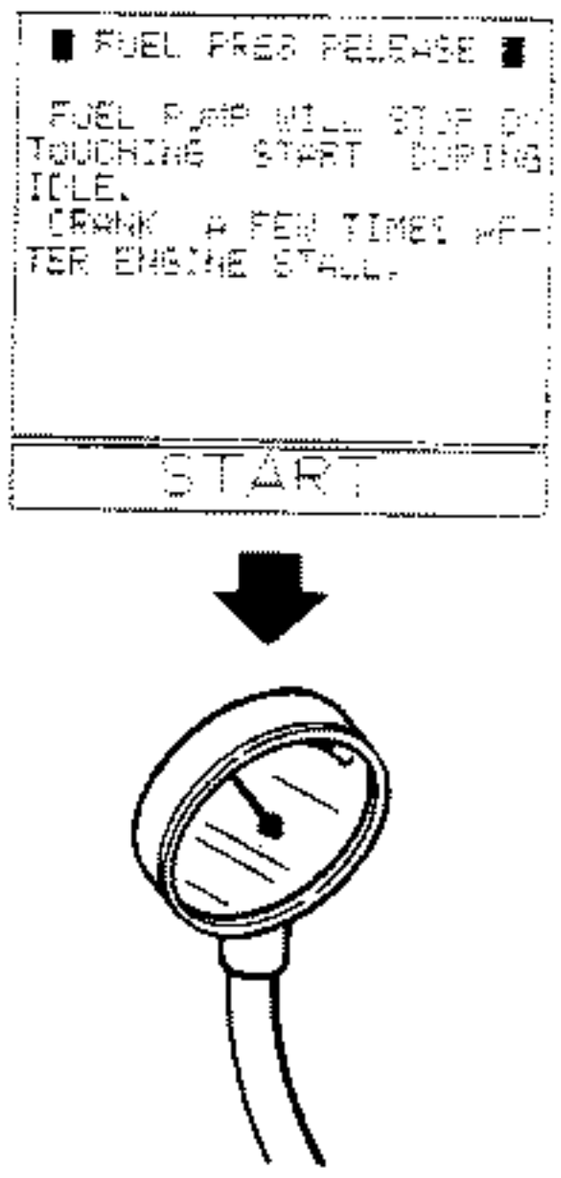

SEF204J

Ⓐ

4

CHECK FUEL PRESSURE.

1. Perform "FUEL PRESSURE RELEASE" in "WORK SUPPORT" mode in order to release fuel pressure to zero.
2. Install fuel pressure gauge and check fuel pressure.
   At idle approx. 255 kPa (2.55 bar, 2.6 kg/cm², 37 psi)
   The moment throttle valve is fully open:
   approx. 304 kPa (3.04 bar, 3.1 kg/cm², 44 psi)

N.G. → Check fuel pump, circuit and fuel pressure regulator.

OR

1. Release fuel pressure to zero. (Refer to page EF & EC-185.)
2. Install fuel pressure gauge and check fuel pressure.

O.K.

5

CHECK FOR INTAKE AIR LEAK.

When pinching blow-by hose (lowering the blow-by air supply), does the engine speed rise?

Yes → Discover air leak location and repair.

No

(Go to Ⓑ on next page.)

5

Left side

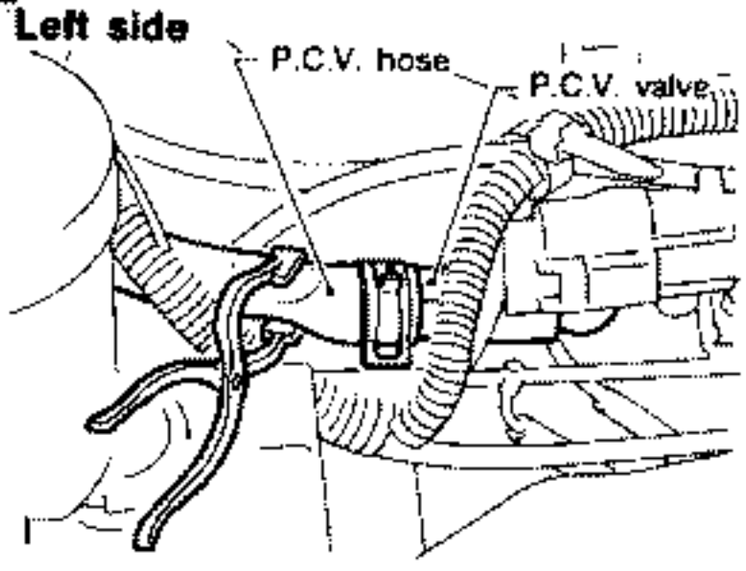

Right side

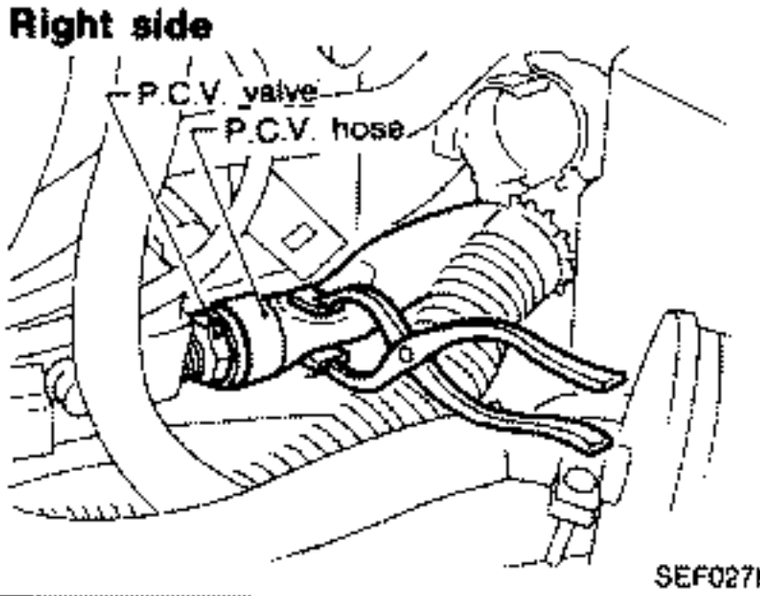

SEF027K

Diagnostic Procedure 15 — Engine Stalls when Accelerating or Cruising (Cont'd)

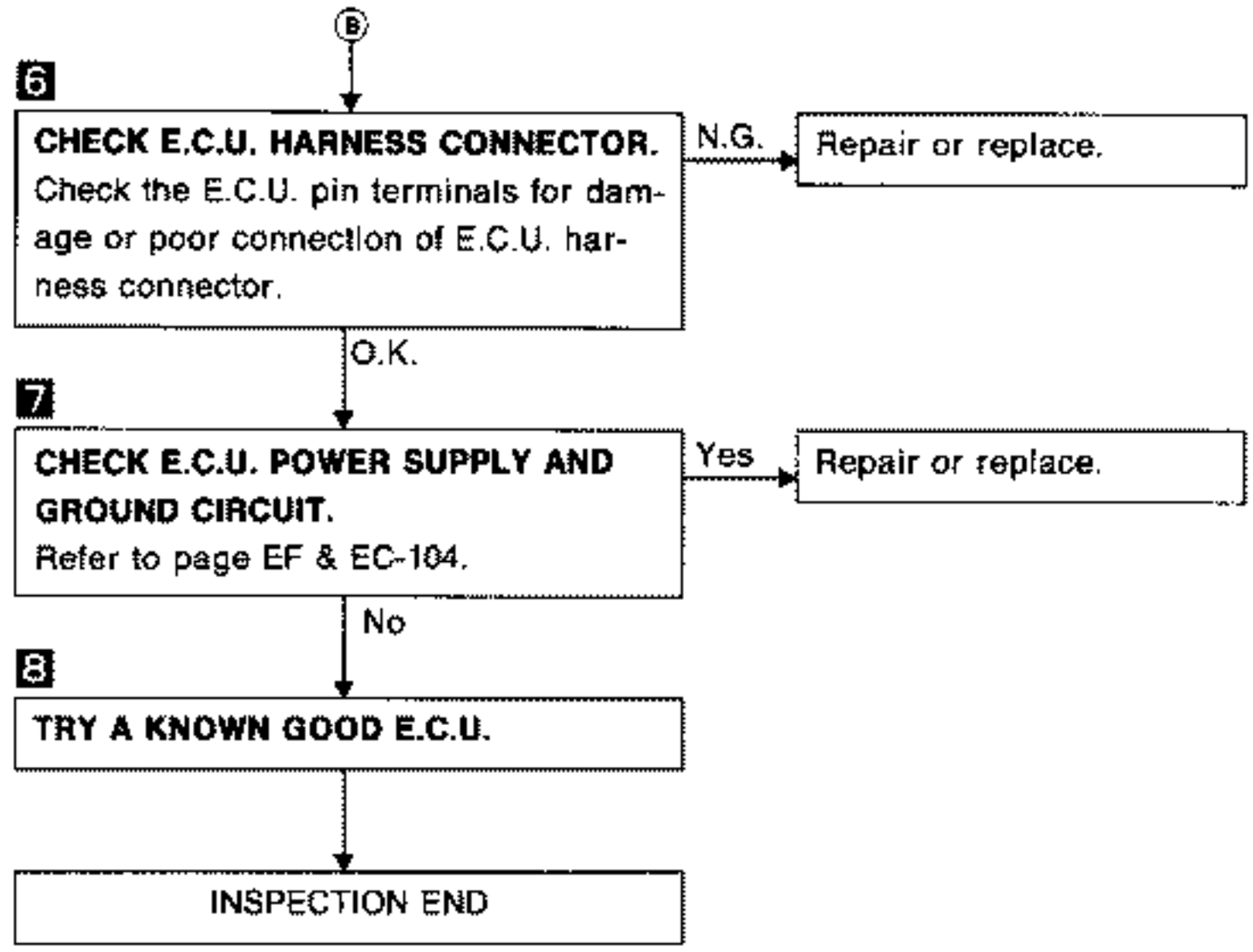

Diagnostic Procedure 16 — Engine Stalls when the Electrical Load is Heavy

1

CHECK BATTERY AND ALTERNATOR.
Check battery and alternator condition.
(Refer to EL section.)

N.G. → Repair or replace.

O.K. ↓

2

PERFORM POWER BALANCE TEST.

1. Perform "POWER BALANCE" in "ACTIVE TEST" mode.
2. Is there any cylinder which does not produce a momentary engine speed drop?

— OR —

When disconnecting each injector harness connector one at a time, is there any cylinder which does not produce a momentary engine speed drop?

No → Go to **5**.

Yes ↓

3

CHECK INJECTOR.

1. Remove crank angle sensor from engine. (Harness connector should remain connected.)
2. Turn ignition switch ON. (Do not start engine.)
3. When rotating crank angle sensor shaft, does each injector make an operating sound?

No → Check injector(s) and circuit(s).

Yes ↓

4

CHECK IGNITION SPARK.

1. Disconnect ignition coil assembly from collector.
2. Connect a known good spark plug to the ignition coil assembly.
3. Place end of spark plug against a suitable ground and crank engine.
4. Check for spark.

N.G. → Check ignition coil, power transistor unit and circuits. (See page EF & EC-118.)

O.K. ↓

(Go to Ⓐ on next page.)

1

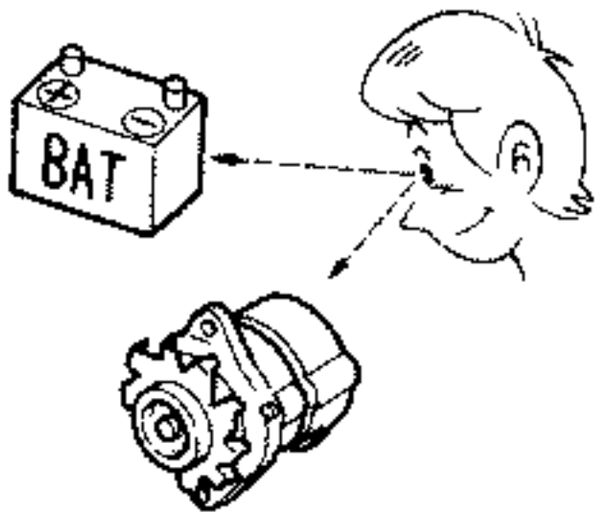

SEF389I

2

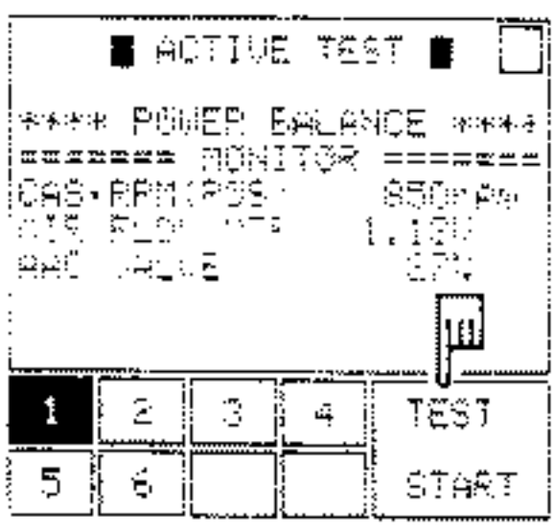

SEF157I

2

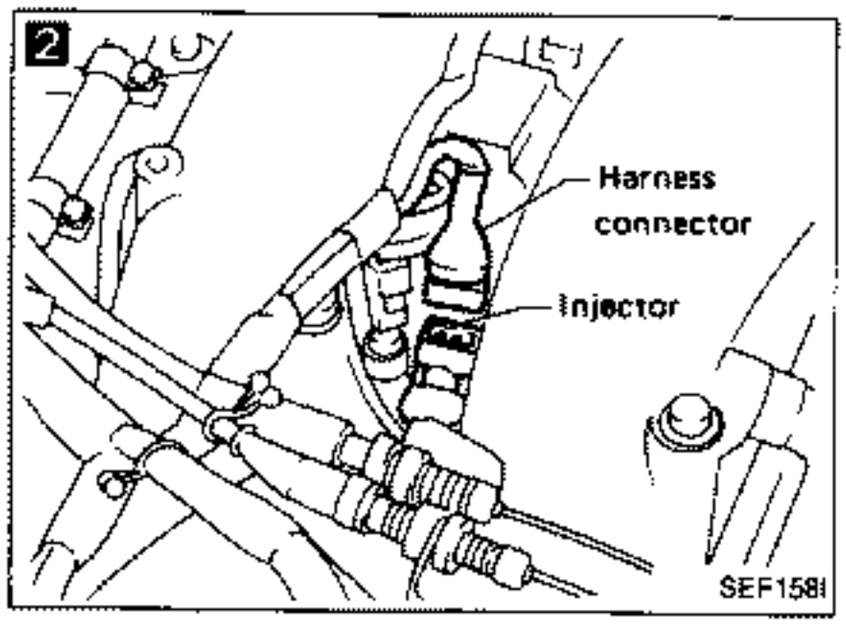

SEF158I

3

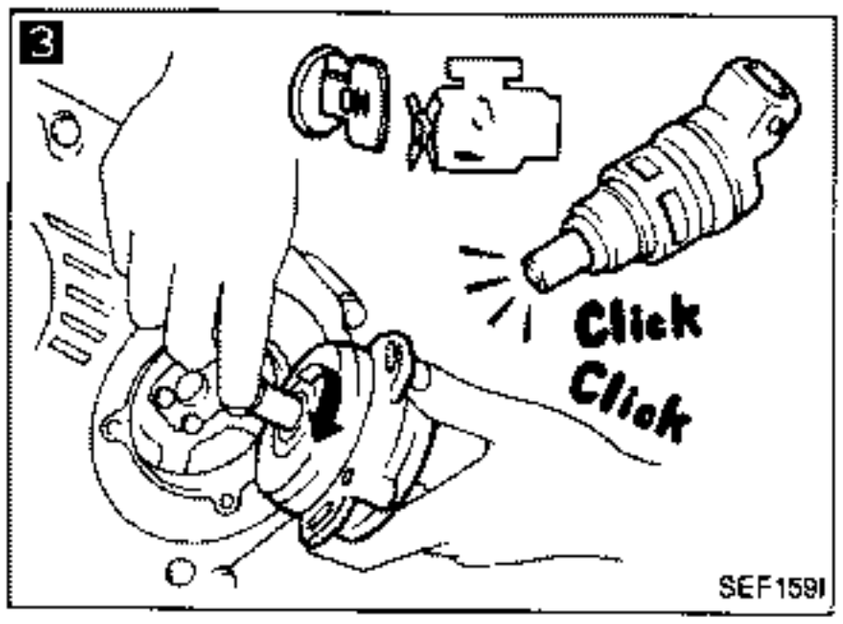

SEF159I

4

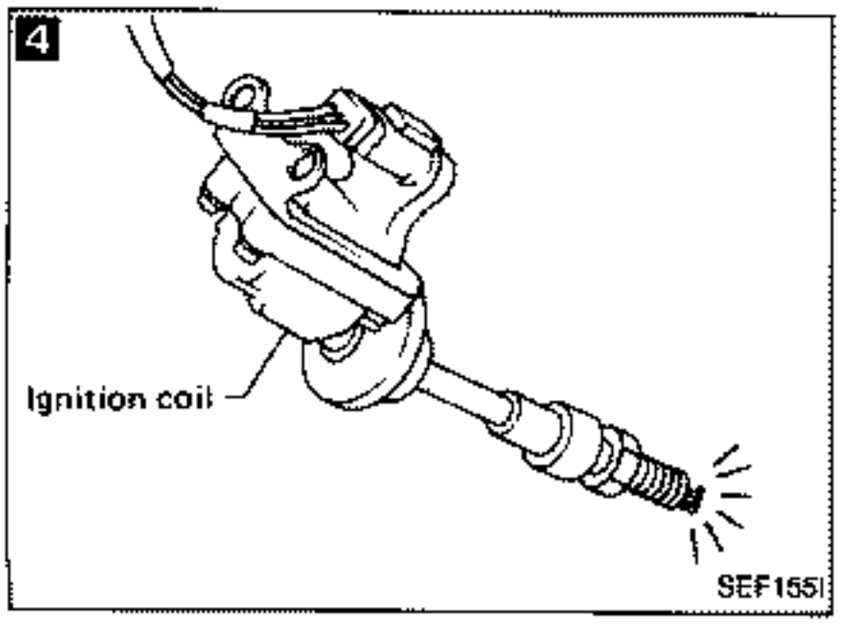

SEF155I

Diagnostic Procedure 16 — Engine Stalls when the Electrical Load is Heavy (Cont'd)

5

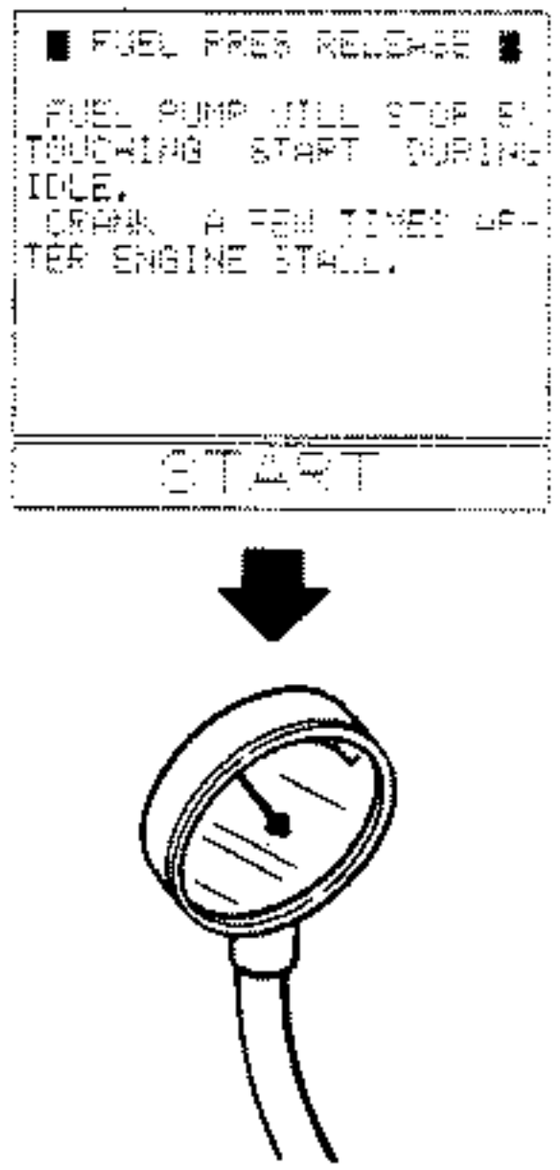

SEF204J

5 (A)

CHECK FUEL PRESSURE.

1. Perform "FUEL PRESSURE RELEASE" in "WORK SUPPORT" mode in order to release fuel pressure to zero.
2. Install fuel pressure gauge and check fuel pressure.
   At idle approx. 255 kPa (2.55 bar, 2.6 kg/cm^2, 37 psi)
   The moment throttle valve is fully open:
   approx. 304 kPa (3.04 bar, 3.1 kg/cm^2, 44 psi)

N.G. → Check fuel pressure regulator diaphragm.

OR

1. Release fuel pressure to zero. (Refer to page EF & EC-185.)
2. Install fuel pressure gauge and check fuel pressure.

O.K. ↓

6

CHECK E.C.U. HARNESS CONNECTOR.
Check the E.C.U. pin terminals for damage or poor connection of E.C.U. harness connector.

N.G. → Repair or replace.

O.K. ↓

7

CHECK E.C.U. POWER SUPPLY AND GROUND CIRCUIT.
Refer to page EF & EC-104.

N.G. → Repair or replace.

O.K. ↓

8

TRY A KNOWN GOOD E.C.U.

↓

INSPECTION END

Diagnostic Procedure 17 — Lack of Power and Stumble

1

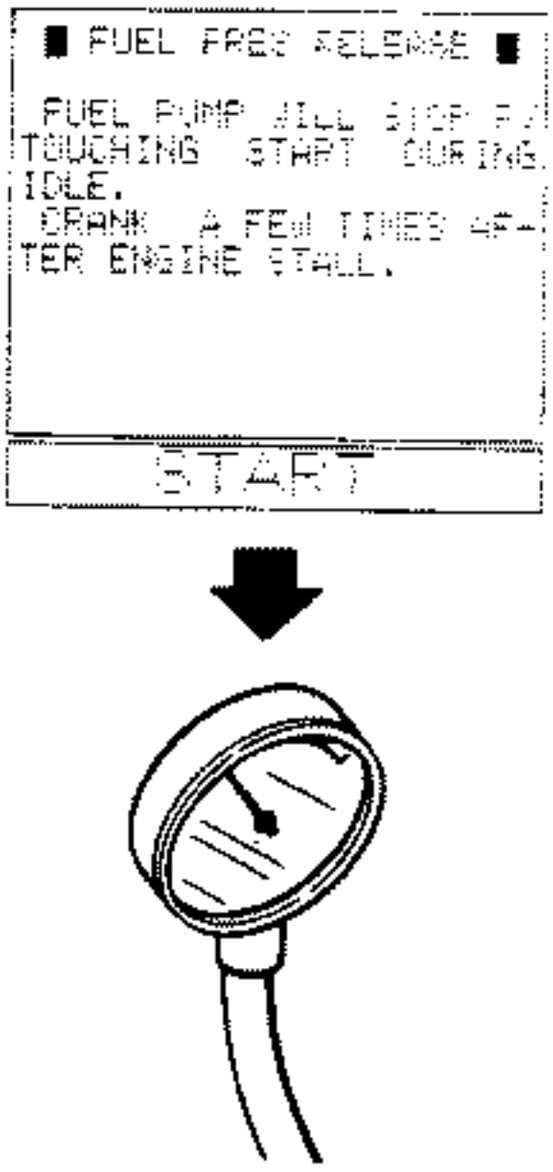

SEF204J

CHECK FUEL PRESSURE.

1. Perform "FUEL PRESSURE RELEASE" in "WORK SUPPORT" mode in order to release fuel pressure to zero.
2. Install fuel pressure gauge and check fuel pressure.
   At idle approx. 255 kPa (2.55 bar, 2.6 kg/cm², 37 psi)
   The moment throttle valve is fully open:
   approx. 304 kPa (3.04 bar, 3.1 kg/cm², 44 psi)

N.G. → Check fuel pressure regulator diaphragm.

OR

1. Release fuel pressure to zero. (Refer to page EF & EC-185.)
2. Install fuel pressure gauge and check fuel pressure.

O.K.

2

CHECK FOR INTAKE AIR LEAK.
When pinching blow-by hose (lowering the blow-by air supply), does the engine speed rise or the engine become more stable?

Yes → Discover air leak location and repair.

No

CHECK TIMING BELT FOR PROPER INSTALLATION.

N.G. → Replace timing belt.

O.K.

INSPECTION END

2

Left side

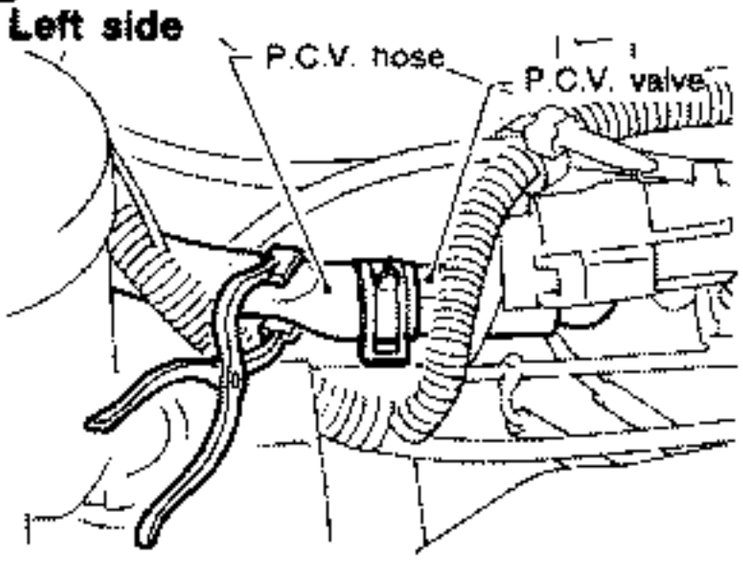

Right side

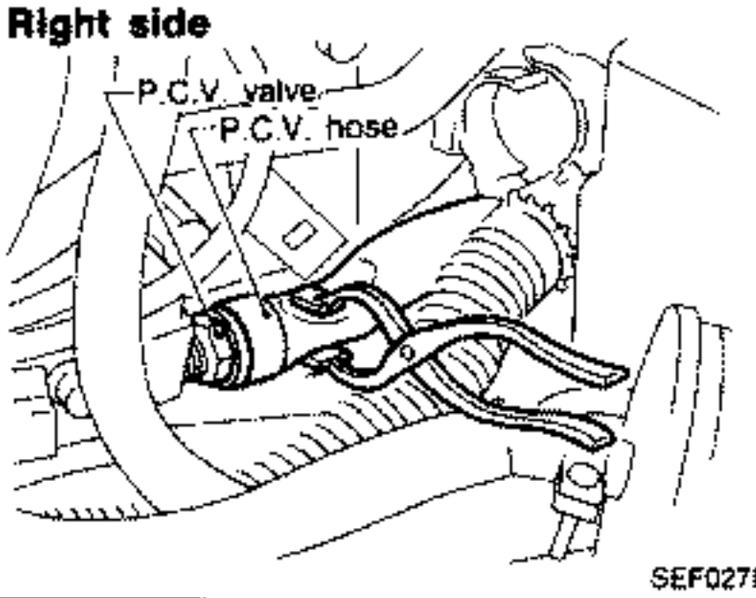

SEF027K

Diagnostic Procedure 18 — Detonation

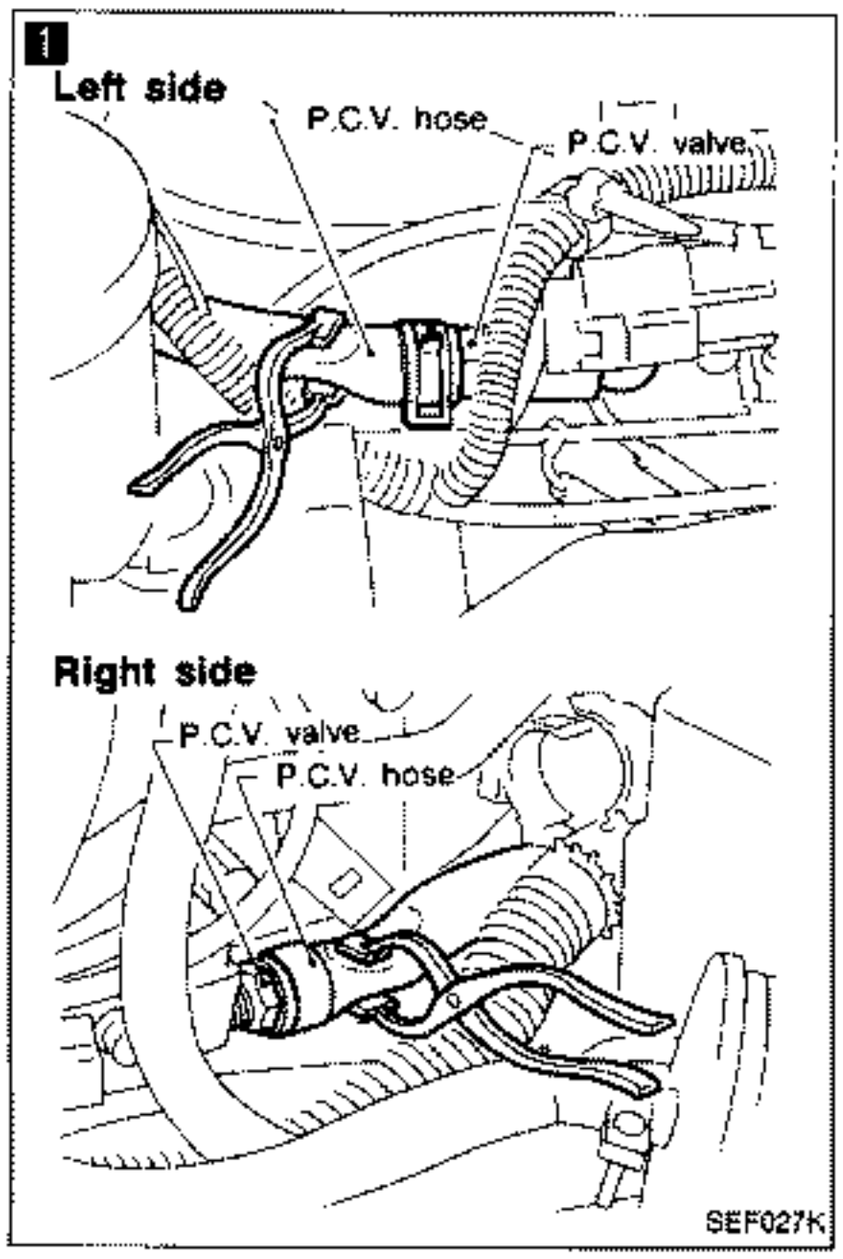

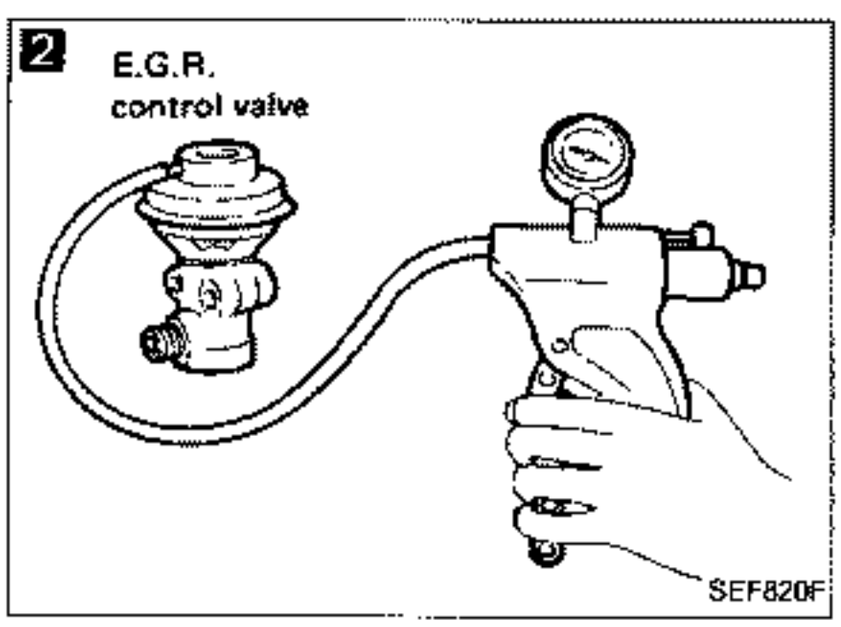

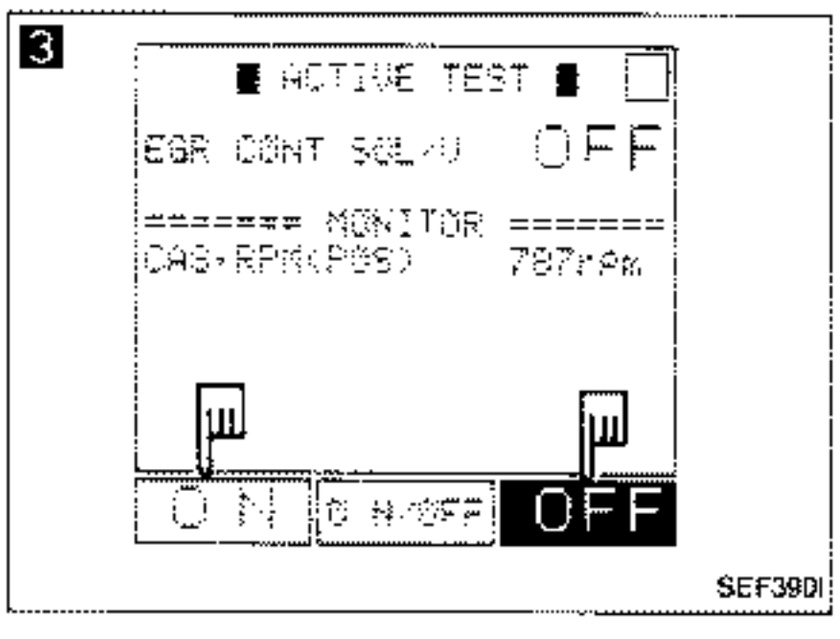

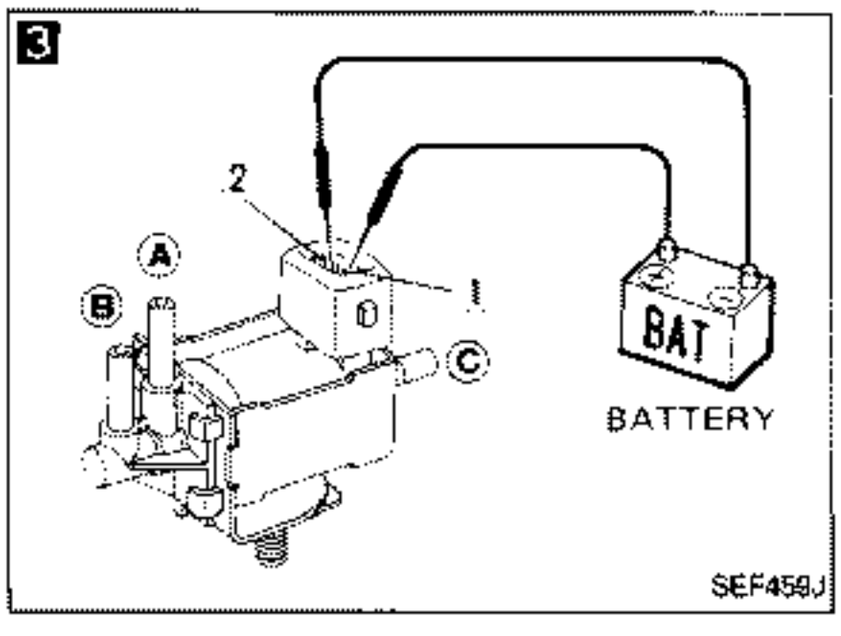

1

CHECK FOR INTAKE AIR LEAK.
When pinching blow-by hose (lowering the blow-by air supply), does the engine rpm rise or the engine become more stable?

Yes → Discover air leak location and repair.

No ↓

2

CHECK E.G.R. OPERATION.
1. Apply vacuum directly to the E.G.R. valve using a handy vacuum pump.
2. Check to see that the engine runs rough or dies.

No → Check E.G.R. valve for sticking.

Yes ↓

3

CHECK E.G.R. CONTROL SOLENOID VALVE.

1. Select "E.G.R. CONT SOL VALVE" in "ACTIVE TEST" mode.
2. Turn E.G.R. control solenoid valve ON and OFF.
3. Check operating sound.

— OR —

1. Disconnect E.G.R. control solenoid valve harness connector.
2. Supply E.G.R. control solenoid valve terminals with battery current and check operating sound.

N.G. → Check solenoid valve and circuit.

O.K. ↓

(Go to Ⓐ on next page.)

Diagnostic Procedure 18 — Detonation (Cont'd)

5

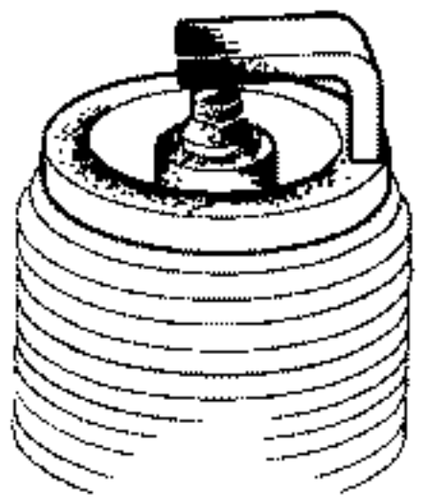

SEF156I

Ⓐ

4

CHECK VACUUM HOSES.
Check the following vacuum hoses for clogging, cracks and poor connection.
a) Vacuum hose between E.G.R. control valve and E.G.R. control solenoid valve.
b) Vacuum hose between E.G.R. control solenoid valve and throttle chamber port.
c) Vacuum hose between E.G.R. control solenoid valve and air duct.

N.G. → Repair or replace.

O.K. ↓

5

CHECK FOR OIL LEAK TO COMBUSTION CHAMBER.
Remove spark plugs and check for fouling with oil.

Yes → Check pistons, piston rings, valves, valve seats, valve oil seal, engine oil level, etc.

No ↓

INSPECTION END

Diagnostic Procedure 19 — Surge

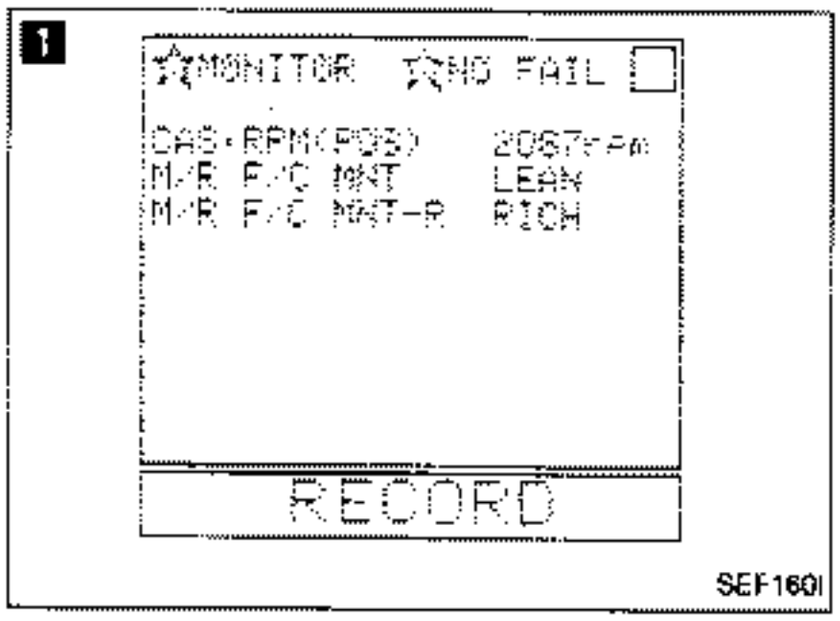

SEF160I

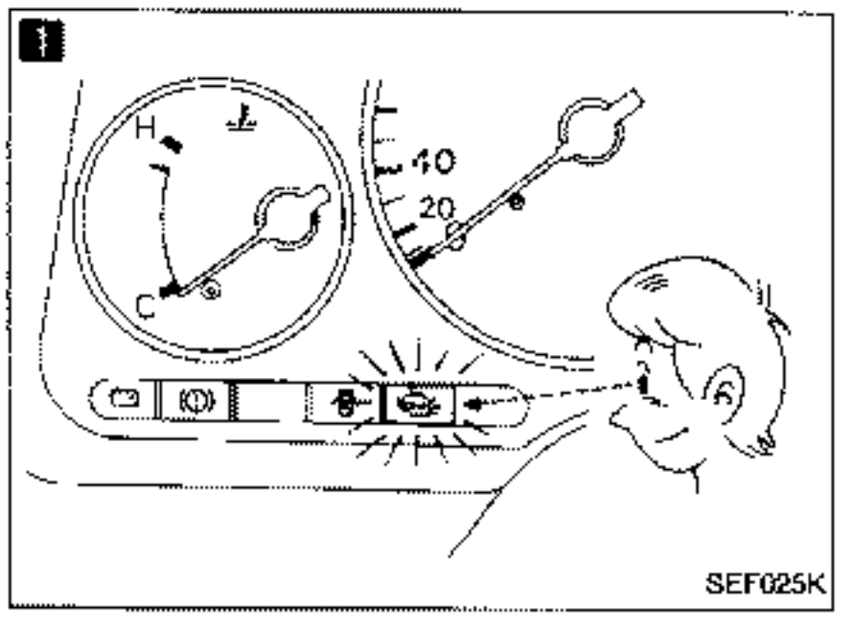

SEF025K

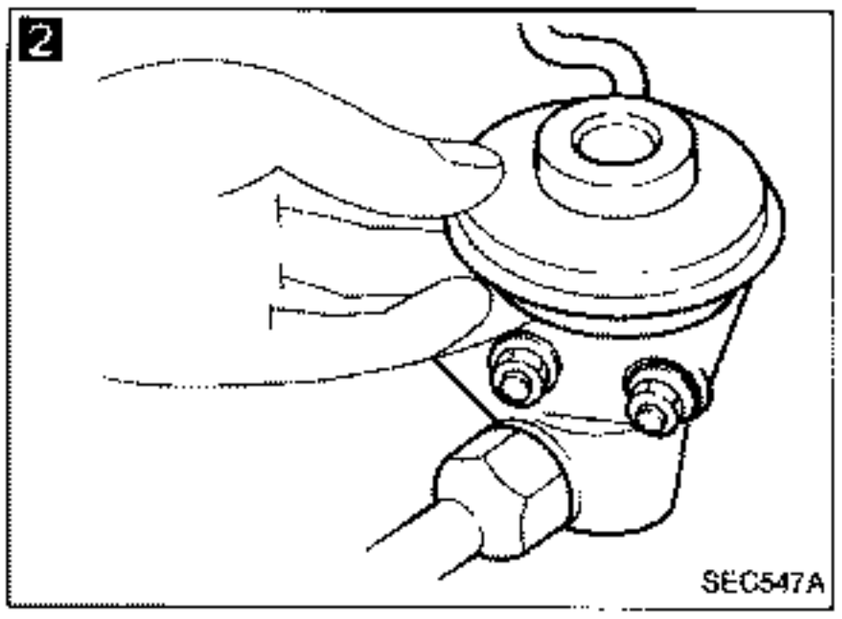
SEC547A

1

CHECK EXHAUST GAS SENSOR.

1. See "M/R F/C MNT (right and left sides)" in "DATA MONITOR" mode.
2. Maintaining engine at 2,000 rpm under no-load (with engine warmed up sufficiently.), check to make sure that the monitor fluctuates between "LEAN" and "RICH" more than 5 times during 10 seconds.

RICH→LEAN→RICH→
1 time 2 times
LEAN→RICH.....

N.G. → Replace exhaust gas sensor(s).

OR

1. Set "Exhaust gas sensor monitor" in the self-diagnostic Mode II. (See page EF & EC-49.)
2. Maintaining engine at 2,000 rpm under no-load, check that check engine light goes ON and OFF more than 5 times during 10 seconds.

O.K.

2

CHECK E.G.R. CONTROL VALVE.
Check E.G.R. control valve for sticking.

N.G. → Repair or replace.

O.K.

3

TRY A KNOWN GOOD E.C.U.

O.K.

INSPECTION END

1

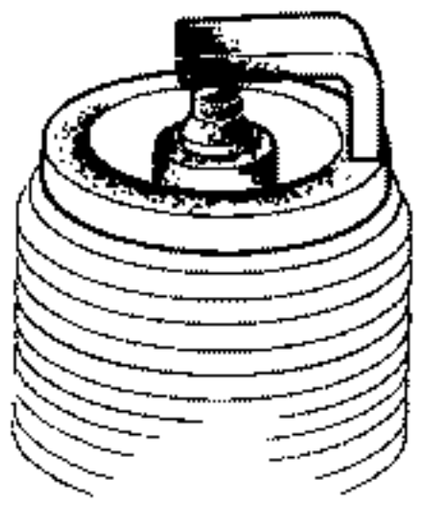

SEF156I

2

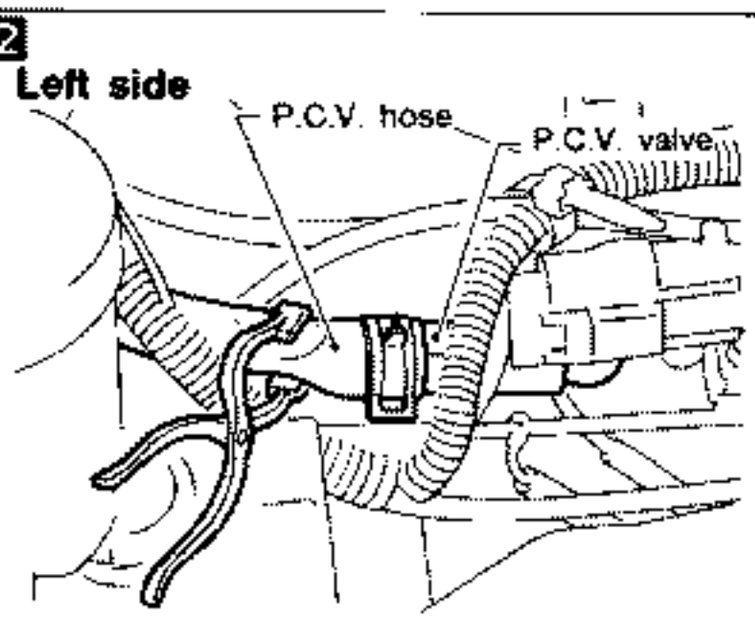

SEF027K

Diagnostic Procedure 20 — Backfire through the Intake

1

CHECK SPARK PLUGS.
Remove the spark plugs and check for fouling, etc.

N.G. → Repair or replace spark plug(s).

O.K. ↓

2

CHECK INTAKE AIR LEAK.
When pinching blow-by hose (lowering the blow-by air supply), does the engine speed rise or the engine become more stable?

Yes → Discover air leak location and repair.

No ↓

3

CHECK FOR INTAKE VALVE DEPOSITS.
If there are deposits on intake valves, remove them.

↓

INSPECTION END

Diagnostic Procedure 21 — Backfire through the Exhaust

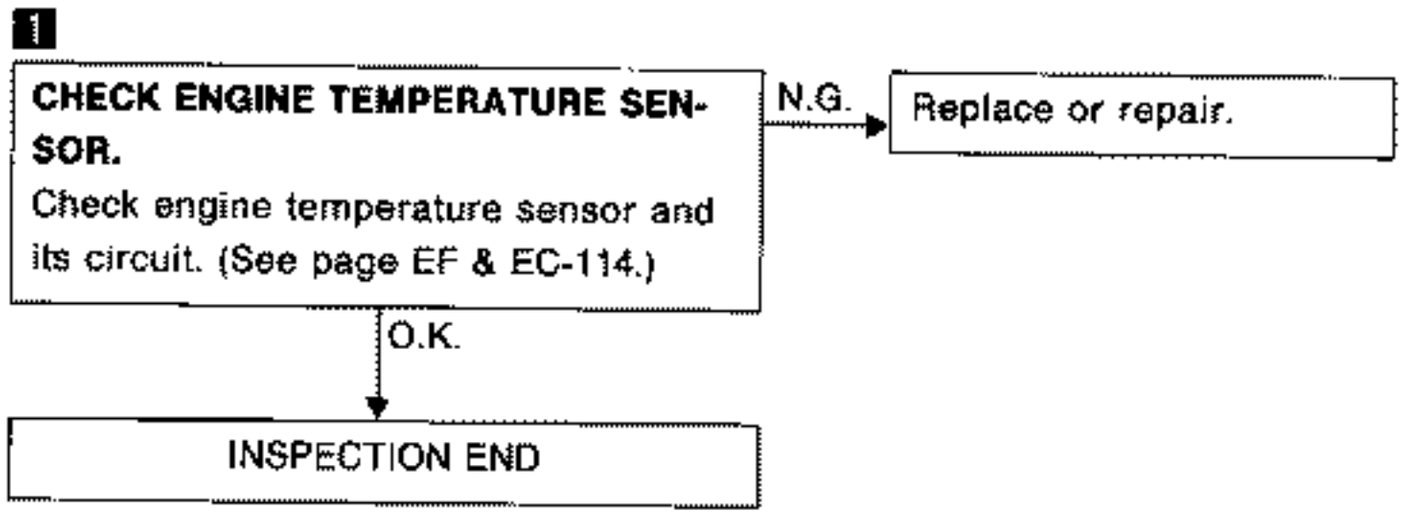

Diagnostic Procedure 22

MAIN POWER SUPPLY AND GROUND CIRCUIT

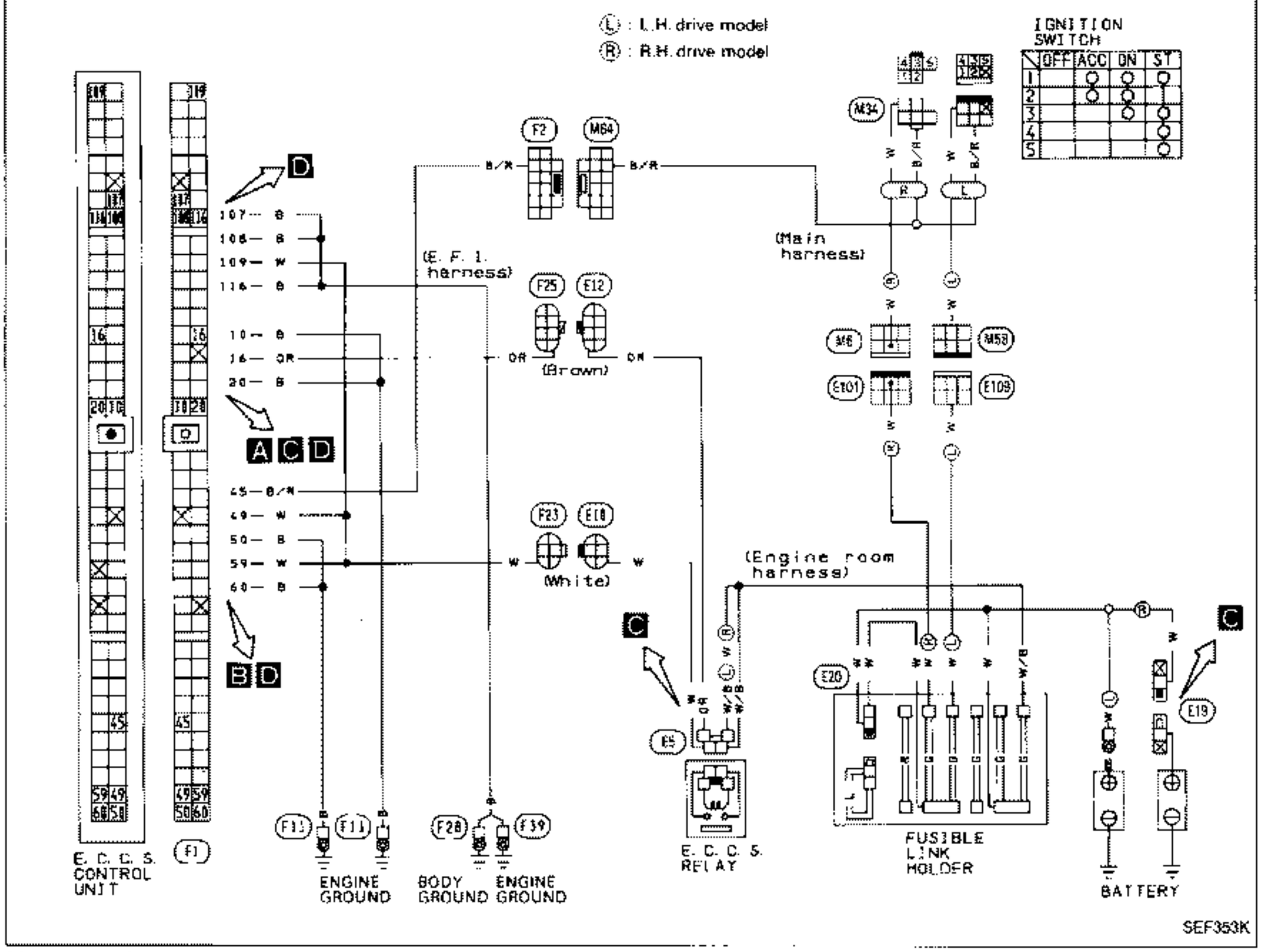

Harness layout

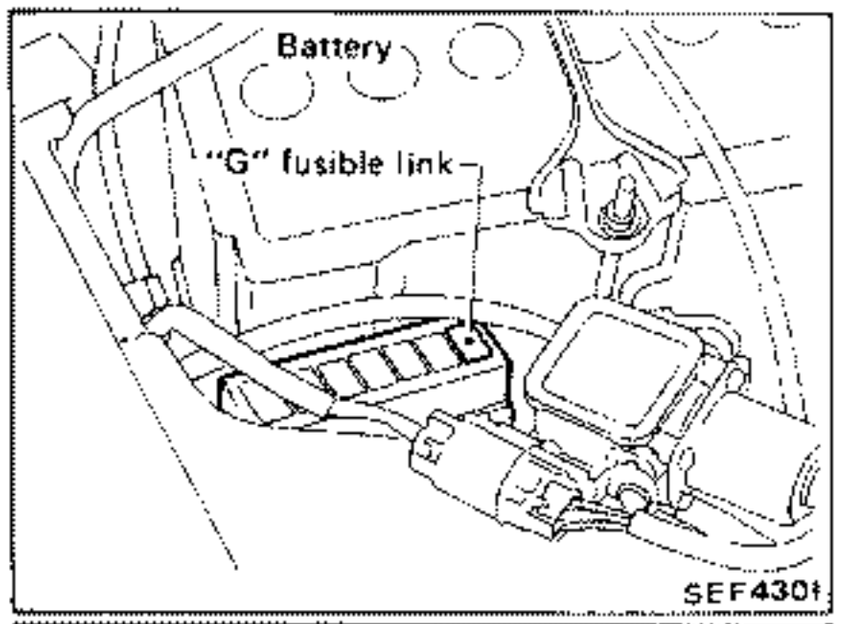

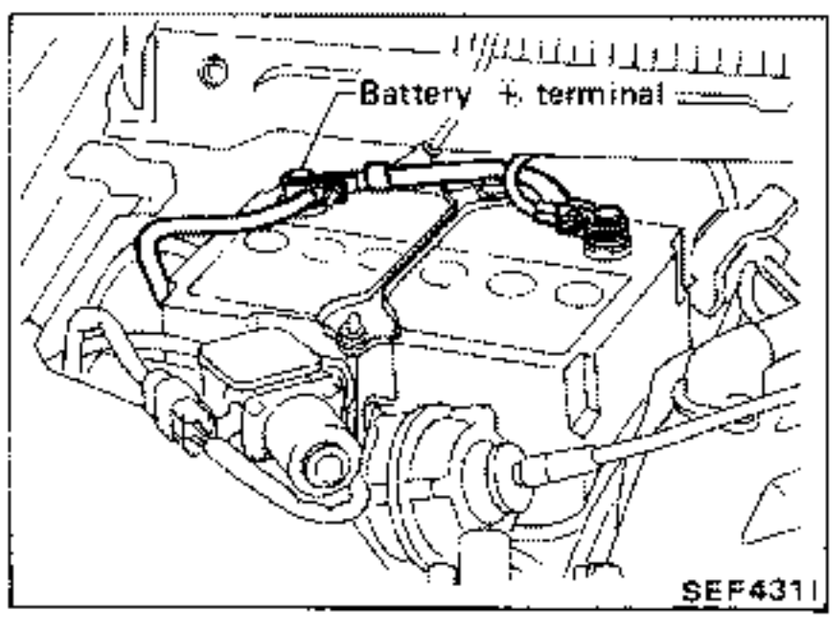

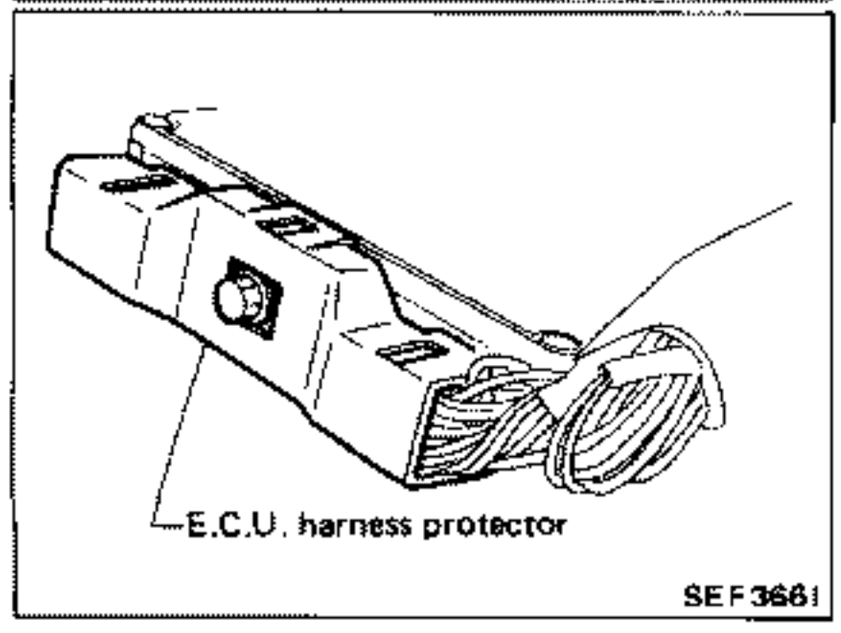

Diagnostic Procedure 22 (Cont'd)

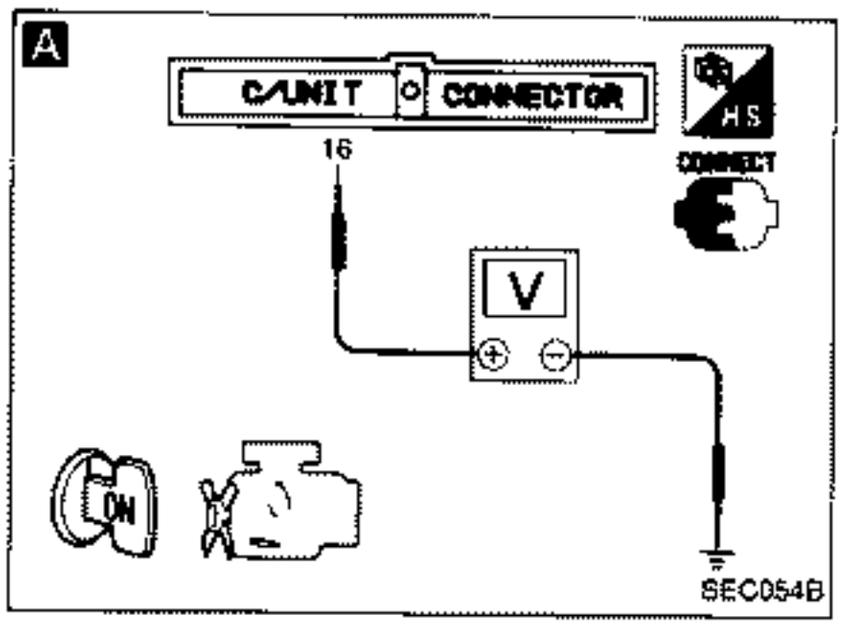

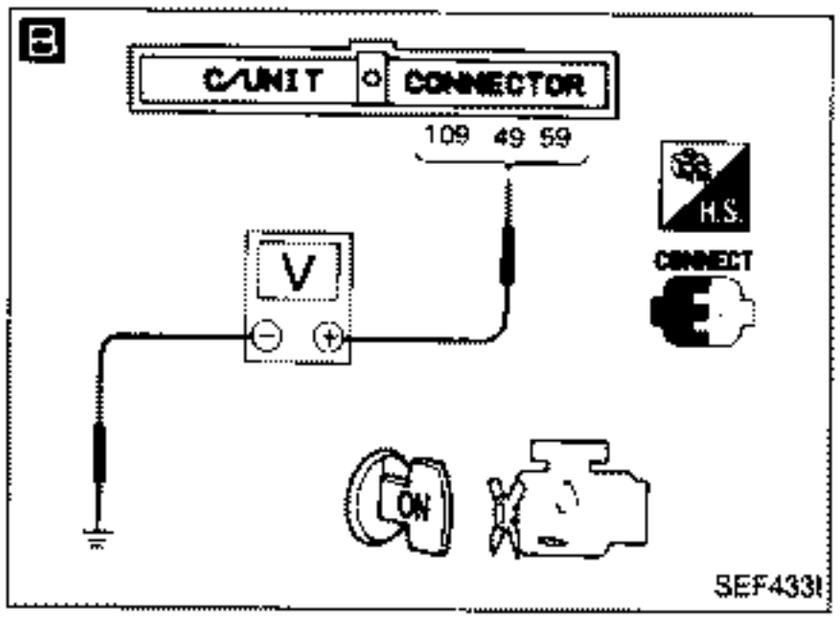

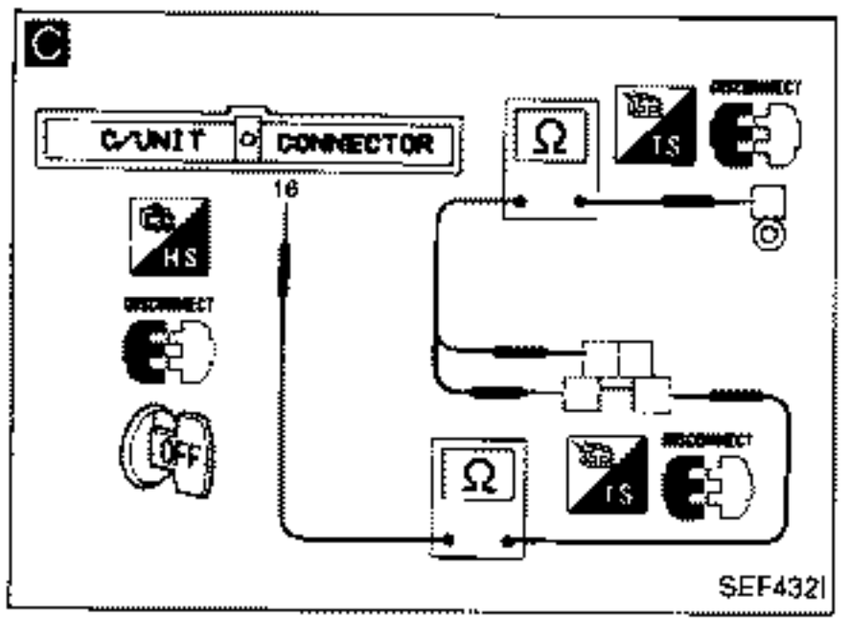

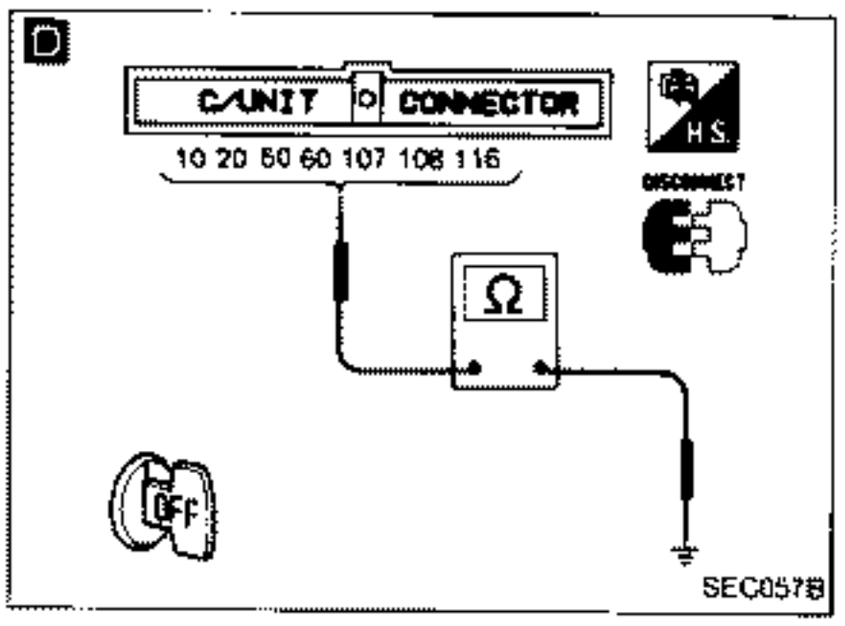

INSPECTION START

CHECK POWER SUPPLY.
1) Turn ignition switch "ON".
A 2) Check voltage between E.C.U. pin terminal (16) and ground.
Voltage:
Approximately 0.8 - 1.0V
B 3) Check voltage between E.C.U. pin terminals (49), (59), (109) and ground.
Voltage: Battery voltage

N.G. → C

C
Check the following items.
1) E.C.C.S. relay
Refer to "Electrical Components Inspection".
(See page EF & EC-184.)
2) "G" fusible link
3) Harness continuity between E.C.C.S. relay and battery ⊕ terminal
Continuity should exist.
4) Harness continuity between E.C.C.S. relay and E.C.U. pin terminal (16)
Continuity should exist.

O.K. ↓

D
CHECK GROUND CIRCUIT.
1) Turn ignition switch "OFF".
2) Disconnect E.C.U. harness connector.
3) Check harness continuity between E.C.U. pin terminals (10), (20), (50), (60), (107), (108), (116) and ground.
Continuity should exist.

N.G. → 1) Check if engine ground terminal connectors (F28), (F11) and (F39) make contact with engine body properly.
2) Repair harness or connectors.

O.K. ↓

INSPECTION END

Diagnostic Procedure 23

CRANK ANGLE SENSOR (Code No. 11)

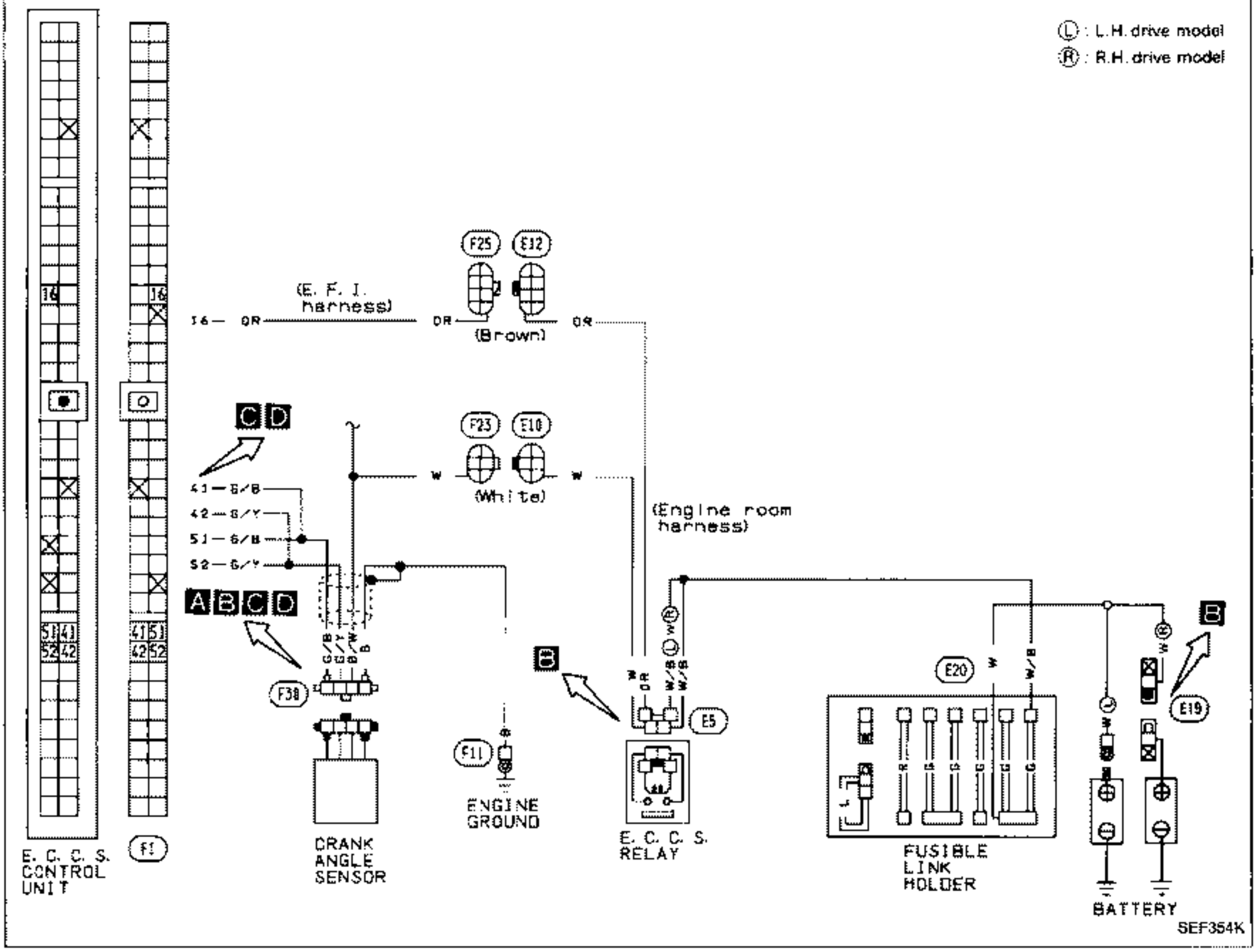

Harness layout

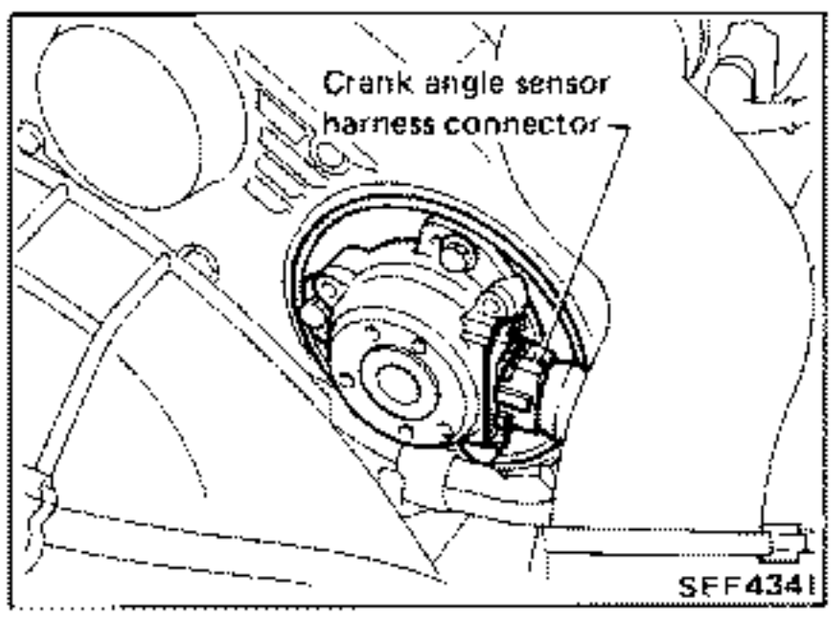

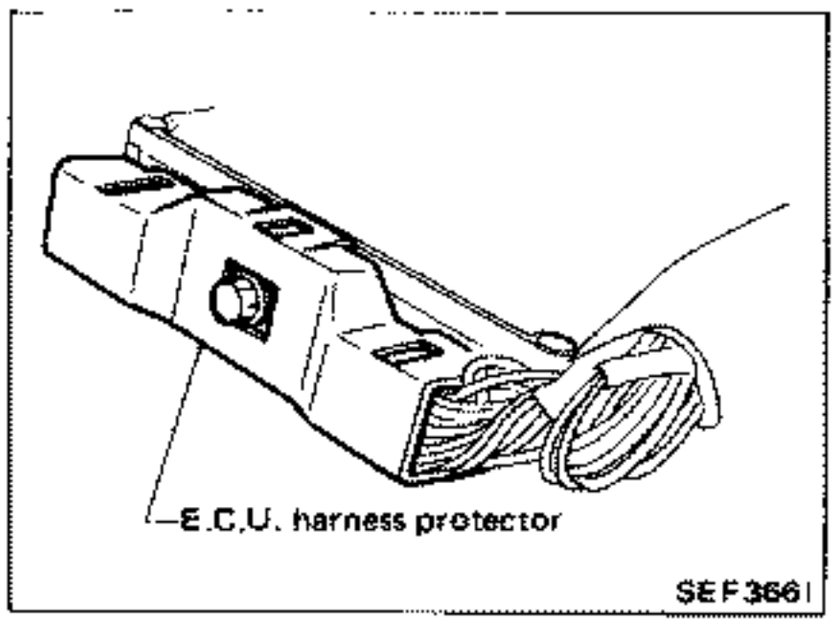

Diagnostic Procedure 23 (Cont'd)

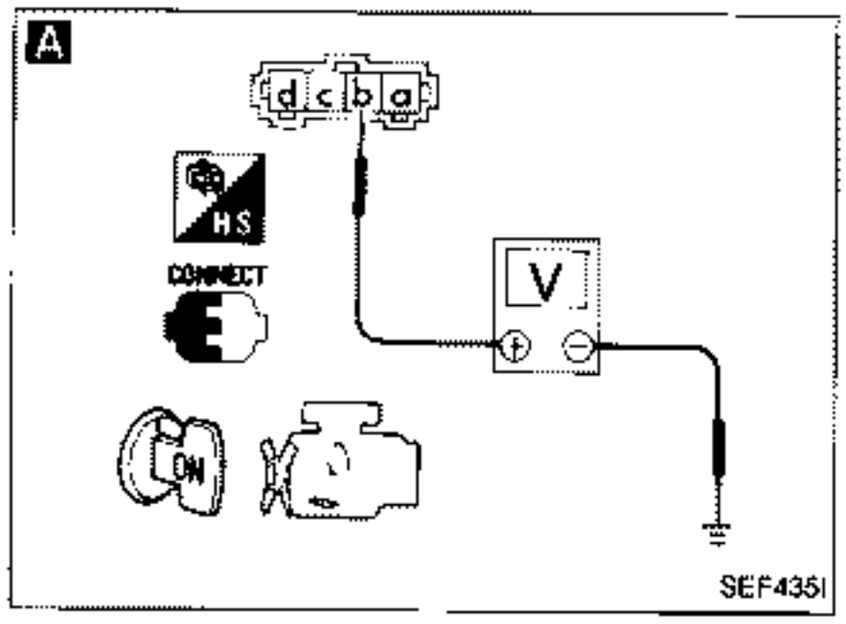

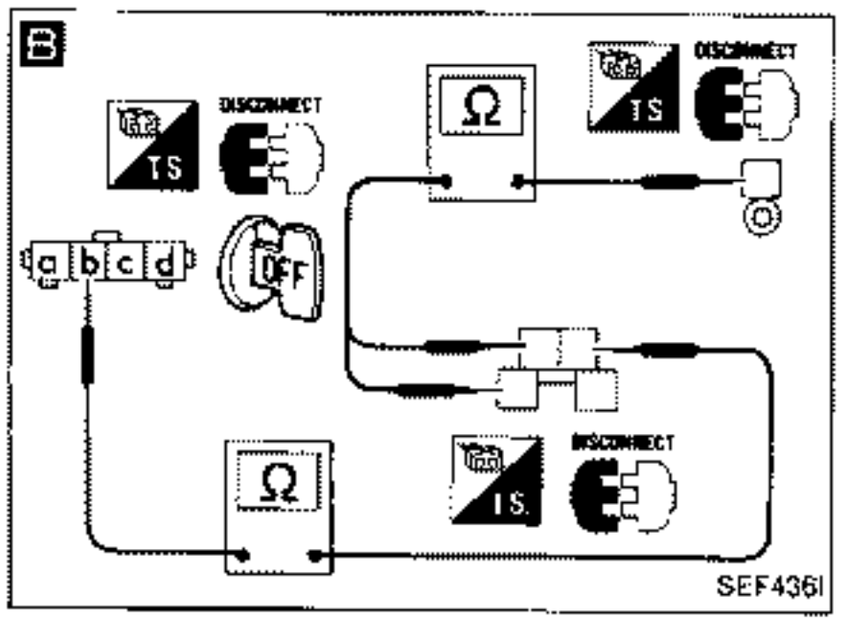

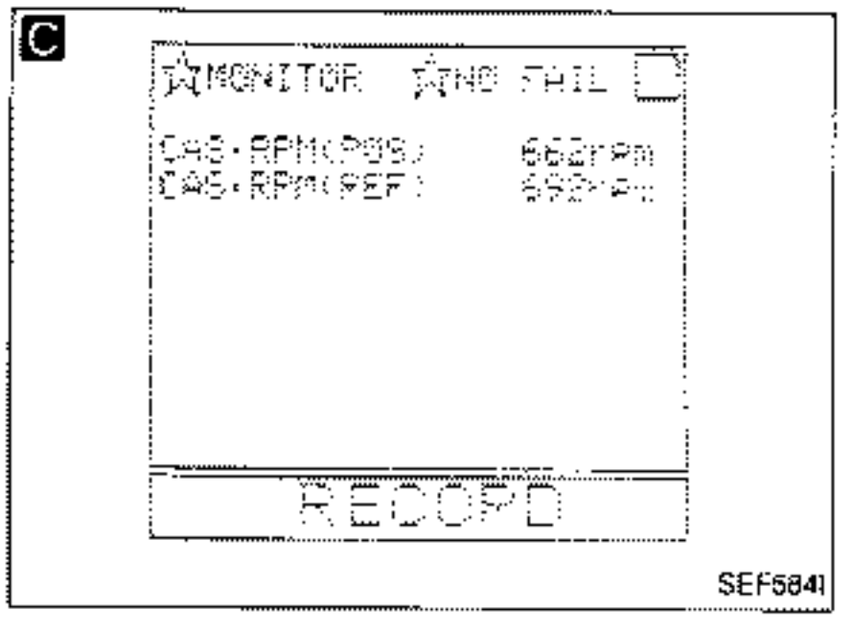

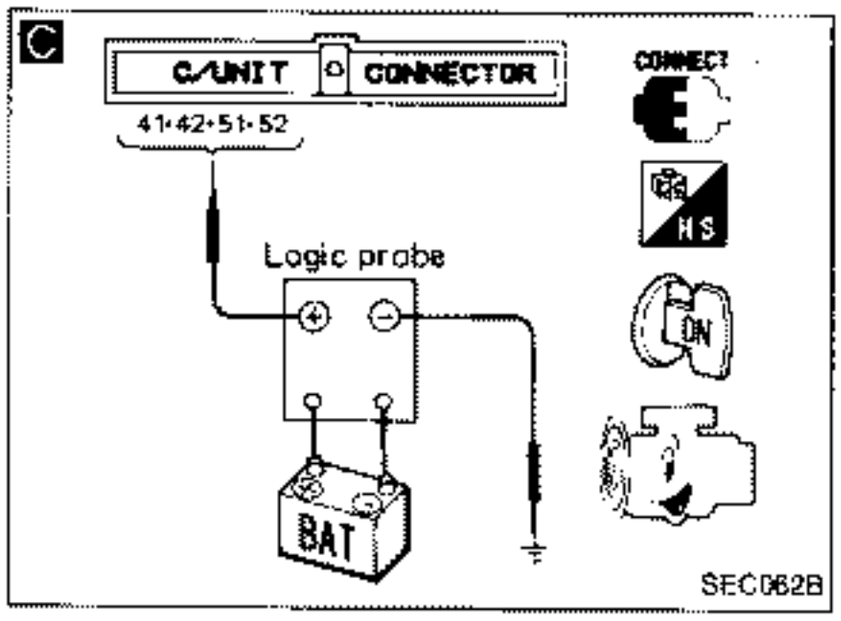

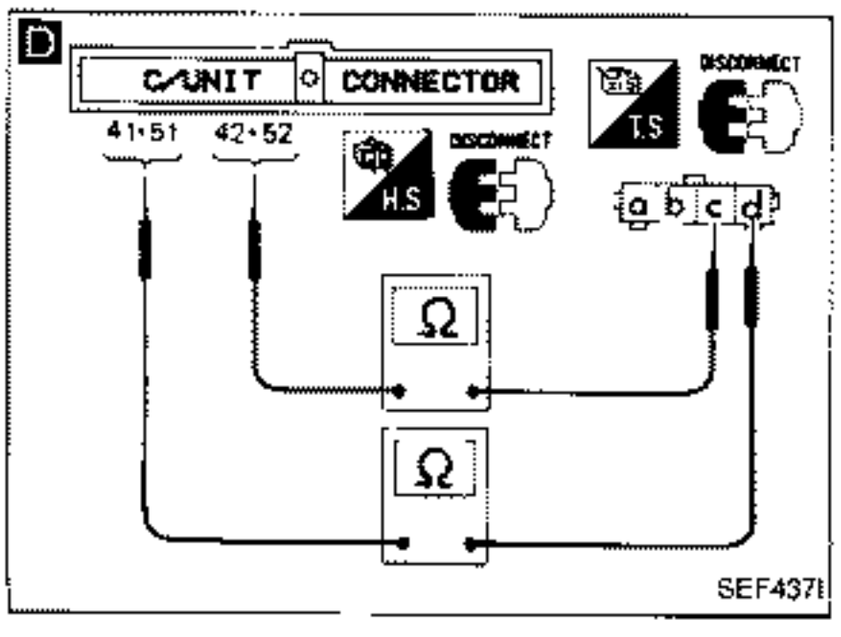

INSPECTION START

A

CHECK POWER SUPPLY.
1) Turn ignition switch "ON".
2) Check voltage between terminal ⓑ and ground.
Voltage: Battery voltage

N.G. →

B

Check the following items.
1) E.C.C.S. relay
Refer to "Electrical Components Inspection".
(See page EF & EC-184.)
2) "G" fusible link
3) Harness continuity between E.C.C.S. relay and battery ⊕ terminal
Continuity should exist.
4) Harness continuity between E.C.C.S. relay and crank angle sensor terminal ⓑ
Continuity should exist.

O.K.

C

CHECK INPUT SIGNAL.
1) Start engine.
2) Read crank angle sensor signals in "DATA MONITOR" mode with CONSULT.

	A/T*	M/T
Non-turbo	770±50 rpm	700±50 rpm
Turbo	750±50 rpm	

*: in "N" position

OR

2) Check that pulse signals exist in E.C.U. terminals ㊶, ㊶ and ㊷, ㊷ with logic probe.
Pulse signal should exist.
㊶, ㊶: 120° signal
㊷, ㊷: 1° signal

N.G. →

D

CHECK HARNESS CONTINUITY BETWEEN E.C.U. AND CRANK ANGLE SENSOR.
1) Stop engine.
2) Disconnect crank angle sensor harness connector.
3) Disconnect E.C.U. harness connector.
4) Check harness continuity between E.C.U. terminals ㊶, ㊶ and terminal ⓓ, E.C.U. terminals ㊷, ㊷ and terminal ⓒ.
Continuity should exist.
If N.G., repair harness or connectors.

O.K.

CHECK COMPONENT
(Crank angle sensor).
Refer to "Electrical Components Inspection".
(See page EF & EC-178.)

O.K.

Diagnostic Procedure 23 (Cont'd)

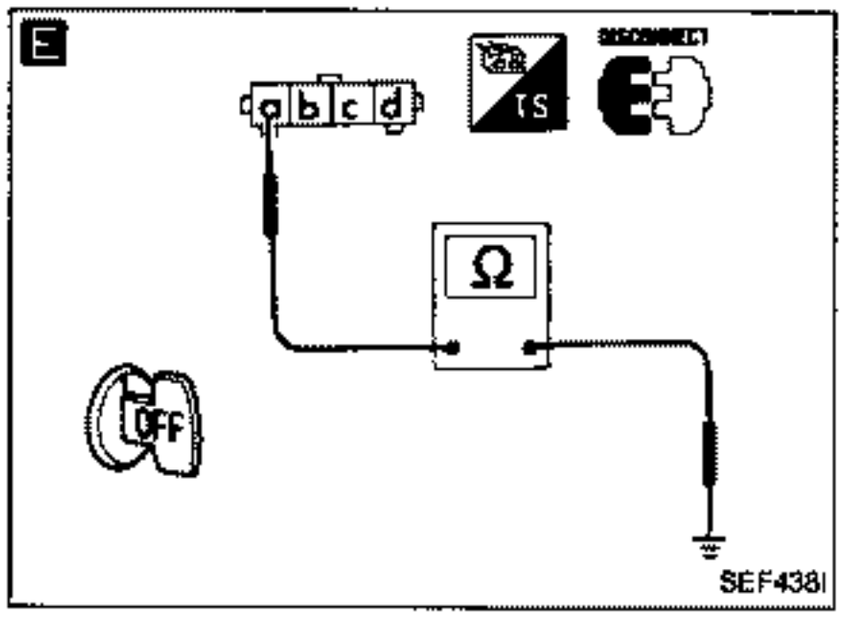

E

CHECK GROUND CIRCUIT.
1) Stop engine.
2) Disconnect crank angle sensor harness connector.
3) Check harness continuity between terminal (a) and ground.
Continuity should exist.

N.G. → Repair harness or connectors.

O.K. ↓

Reinstall any part removed.

↓

Erase the SELF-DIAGNOSTIC RESULTS memory.

↓

Perform driving test and then perform SELF-DIAGNOSTIC RESULTS (Mode II) again.

N.G. → 1) Perform E.C.U. input/output signal inspection test.
2) If N.G., recheck the E.C.U. pin terminals for damage. Check the connection at the E.C.U. harness connector.

O.K. ↓

INSPECTION END

NOTE

Diagnostic Procedure 24

AIR FLOW METER (Code No. 12)

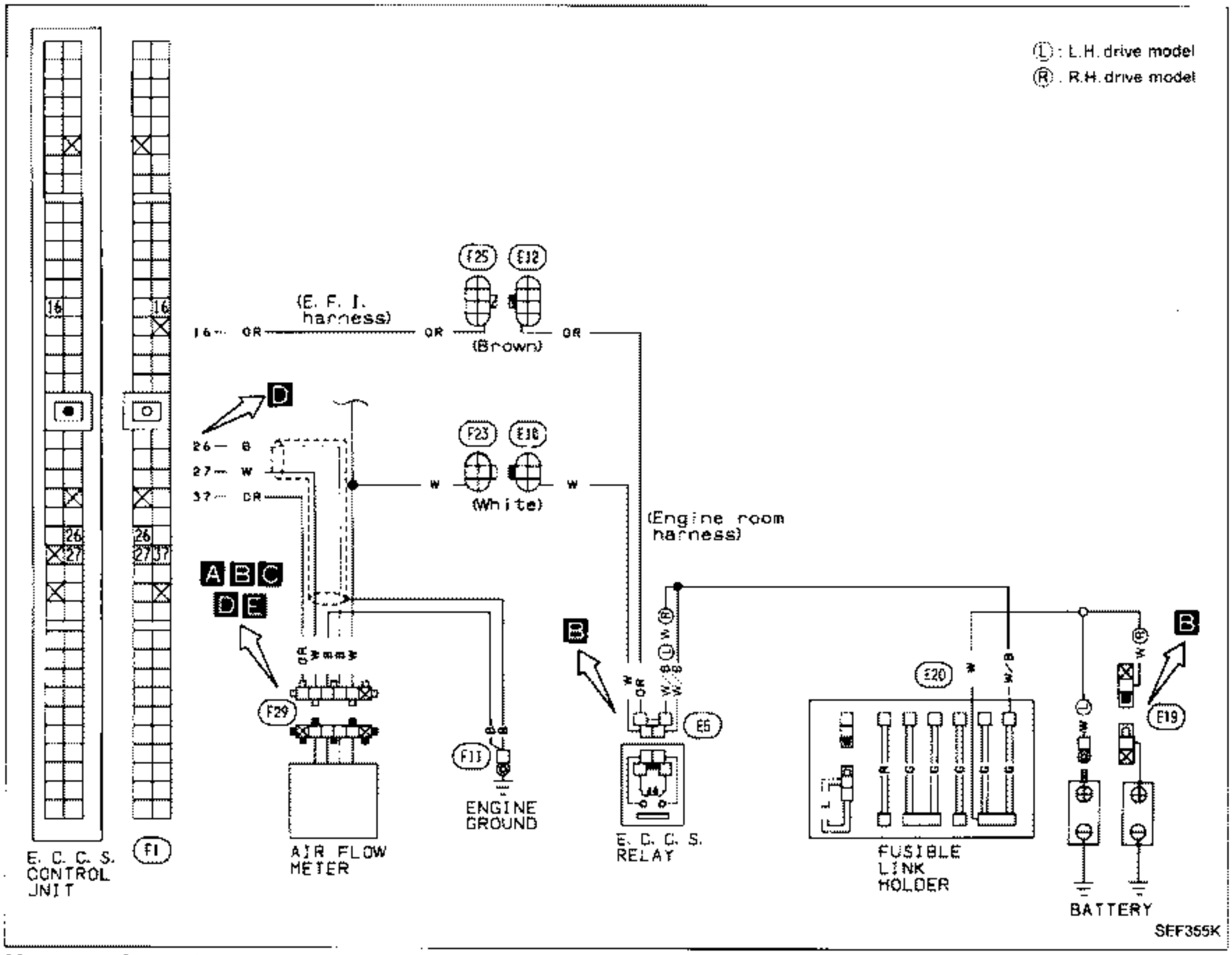

SEF355K

Harness layout

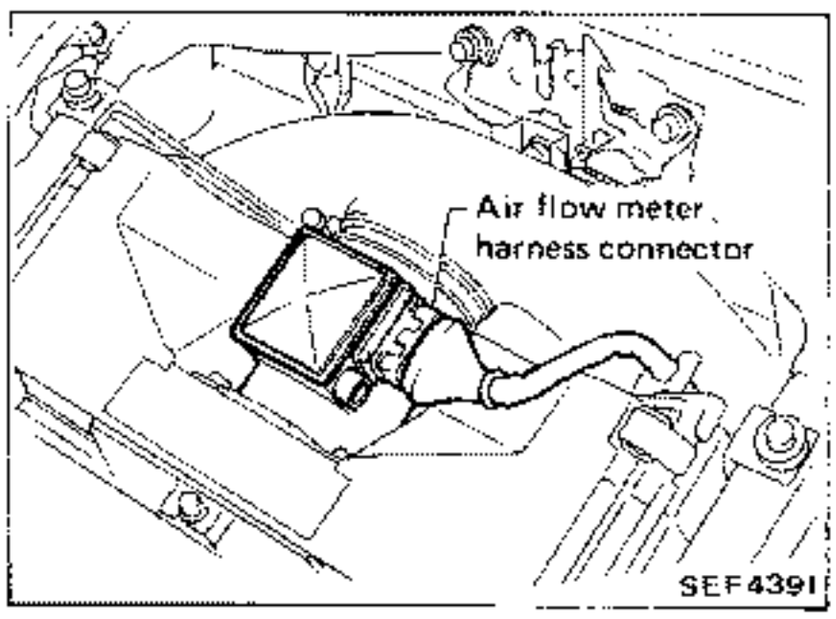

SEF439I

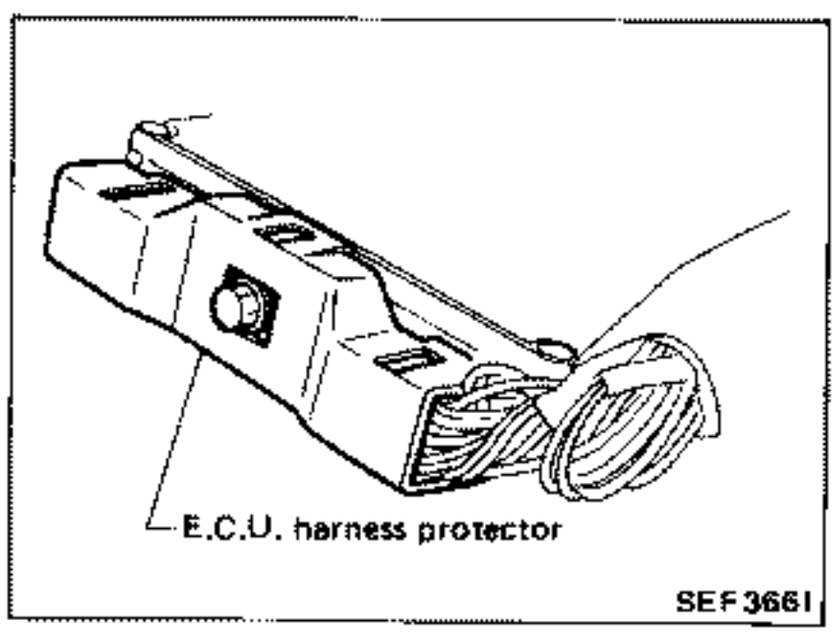

SEF366I

Diagnostic Procedure 24 (Cont'd)

A

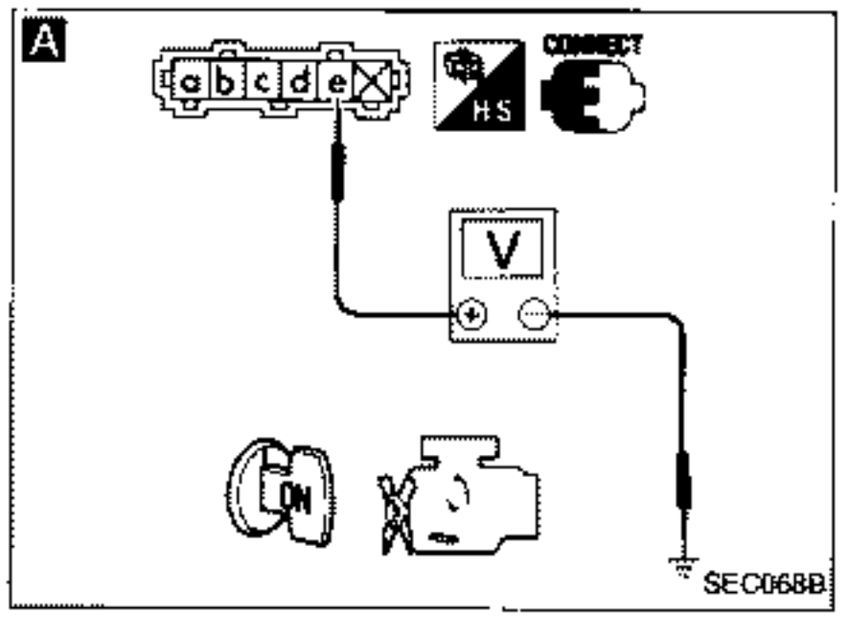

B

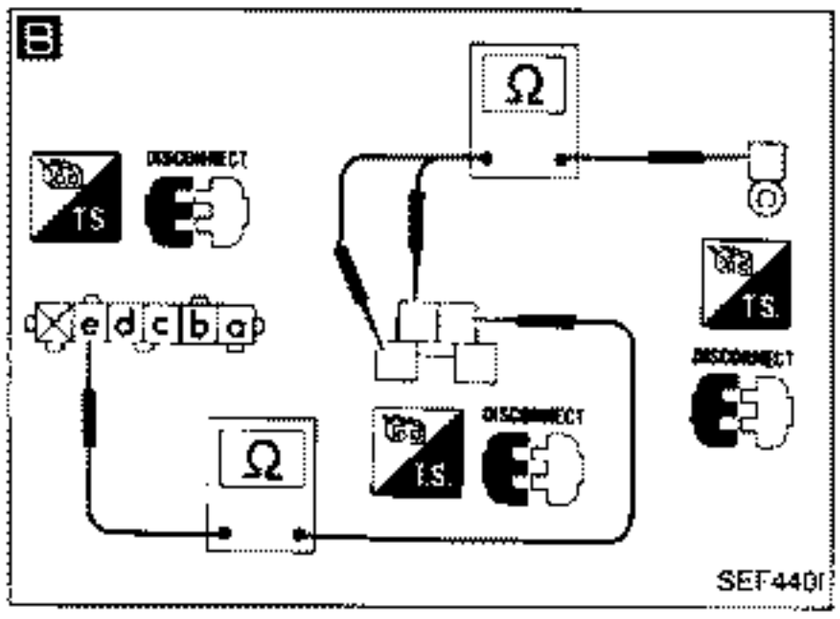

C

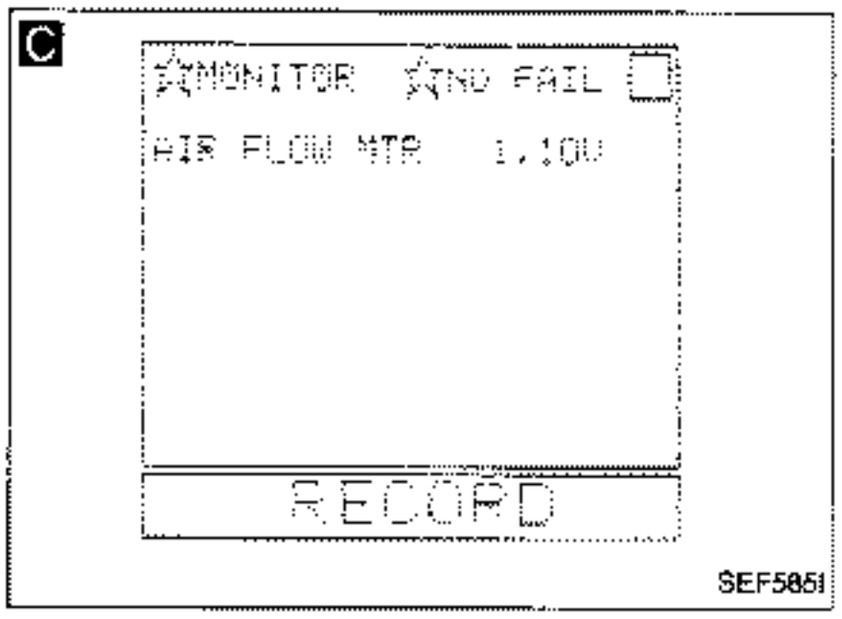

C

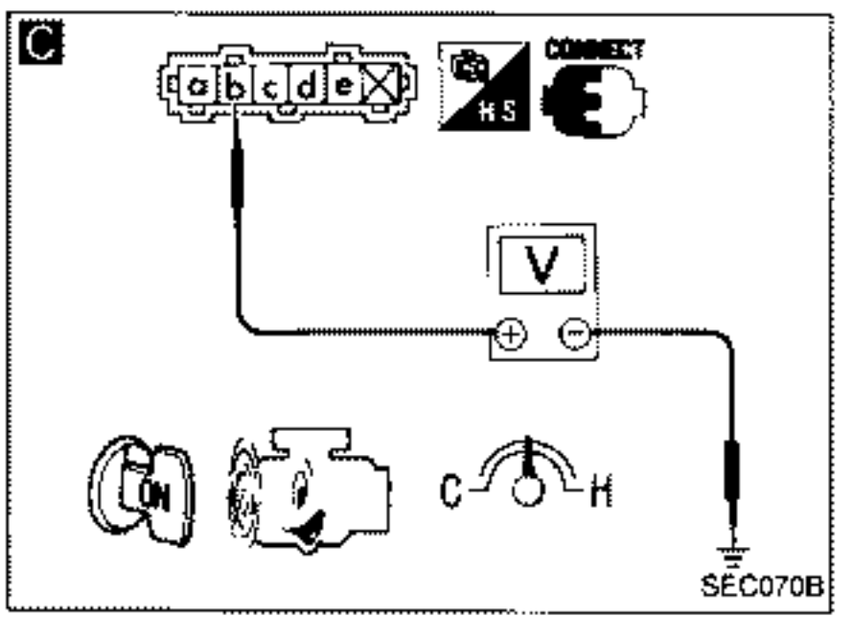

D

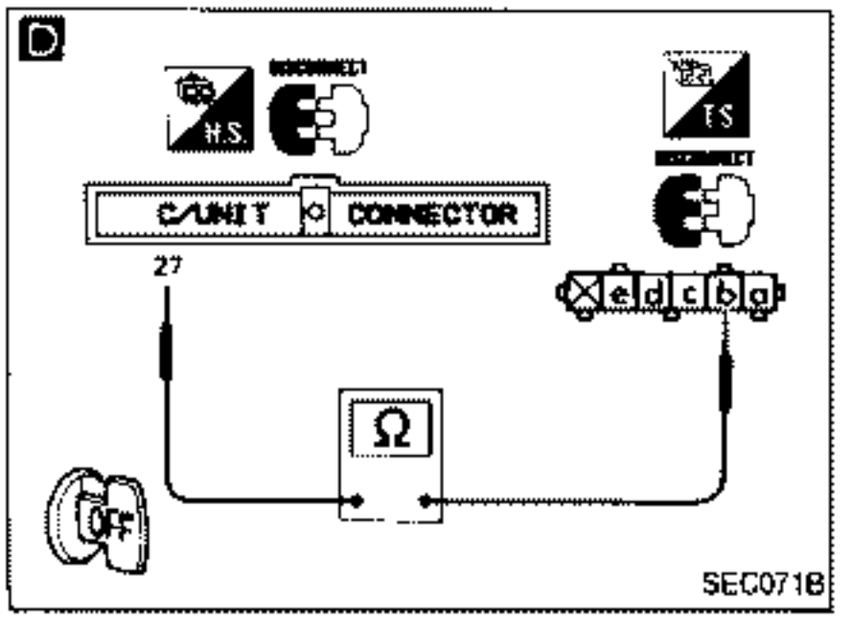

INSPECTION START

A

CHECK POWER SOURCE.
1) Turn ignition switch "ON".
2) Check voltage between terminal ⓔ and ground.
Voltage: Battery voltage

N.G. → B

O.K.

B

Check the following items.
1) E.C.C.S. relay
Refer to "Electrical Components Inspection".
(See page EF & EC-184.)
2) "G" fusible link
3) Harness continuity between E.C.C.S. relay and battery ⊕ terminal
Continuity should exist.
4) Harness continuity between E.C.C.S. relay and air flow meter terminal ⓔ
Continuity should exist.

C

CHECK INPUT SIGNAL.
1) Start engine and warm it up sufficiently.
2) Read air flow meter signal in "DATA MONITOR" mode with CONSULT.
Voltage: 0.8 - 1.5V

OR

2) Check voltage between terminals ⓑ and ground at idle under no-load.
Voltage: 0.8 - 1.5V

N.G. → D

D

CHECK HARNESS CONTINUITY BETWEEN AIR FLOW METER AND E.C.U.
1) Stop engine.
2) Disconnect air flow meter harness connector.
3) Disconnect E.C.U. harness connector.
4) Check harness continuity between E.C.U. terminal ㉗ and terminal ⓑ.
Continuity should exist.
If N.G., repair harness or connectors.

O.K.

CHECK COMPONENT
(Air flow meter).
Refer to "Electrical Components Inspection".
(See page EF & EC-178.)

E

CHECK GROUND CIRCUIT.
1) Stop engine.
2) Disconnect air flow meter harness connector.
3) Check harness continuity between terminal ⓒ and ground.
Continuity should exist.

N.G. → Repair harness or connectors.

O.K.

Diagnostic Procedure 24 (Cont'd)

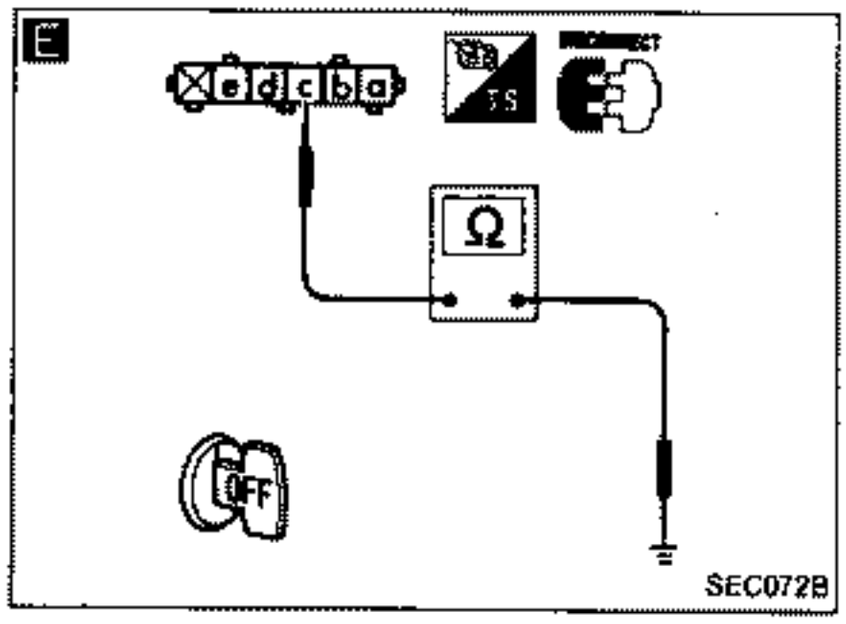

Reinstall any part removed.

Erase the SELF-DIAGNOSTIC RESULTS memory.

Perform driving test and then perform SELF-DIAGNOSTIC RESULTS (Mode II) again.

N.G.

1) Perform E.C.U. input/output signal inspection test.
2) If N.G., recheck the E.C.U. pin terminals for damage. Check the connection at the E.C.U. harness connector.

O.K.

INSPECTION END

NOTE

Diagnostic Procedure 25

ENGINE TEMPERATURE SENSOR (Code No. 13)

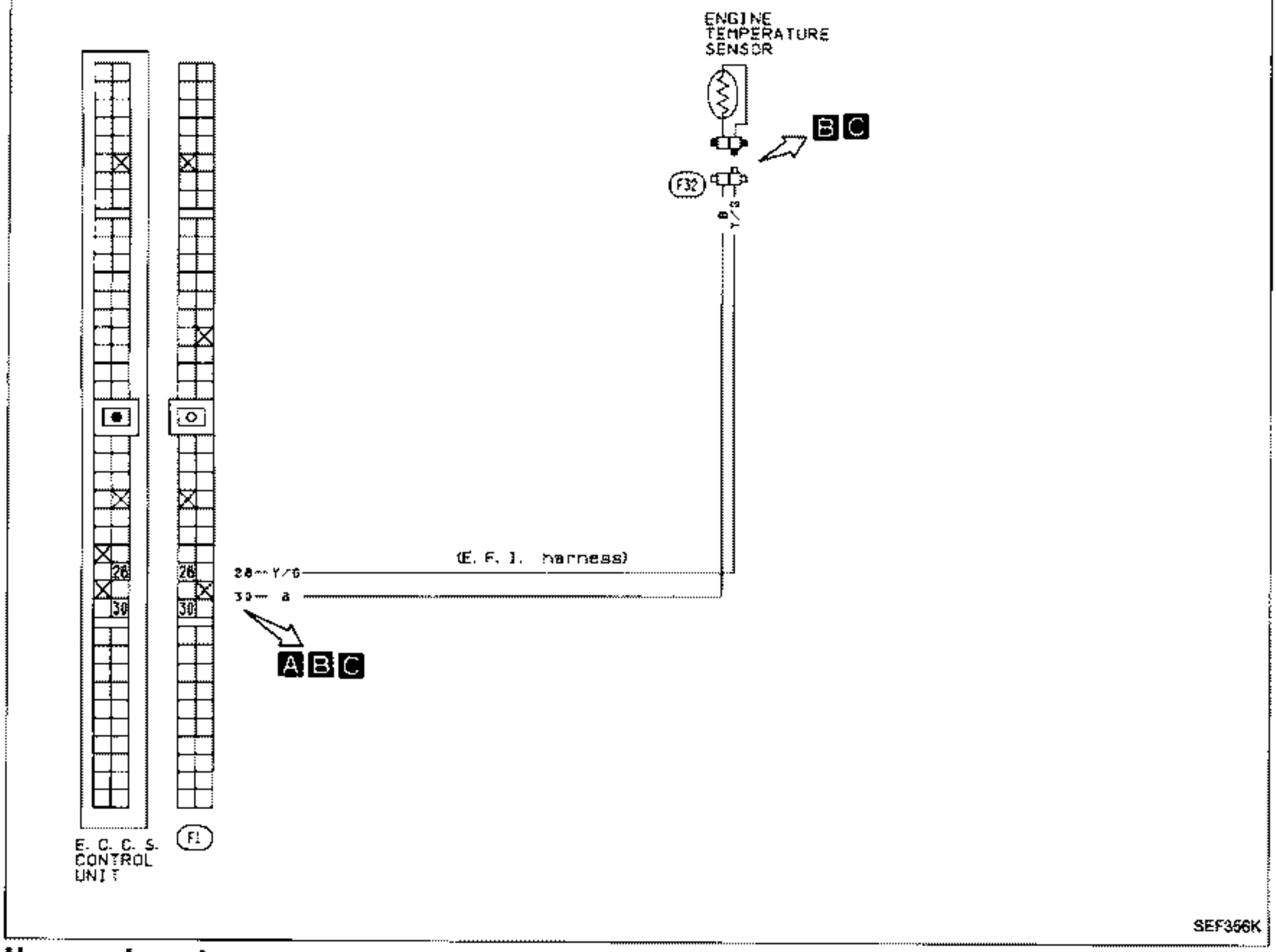

SEF356K

Harness layout

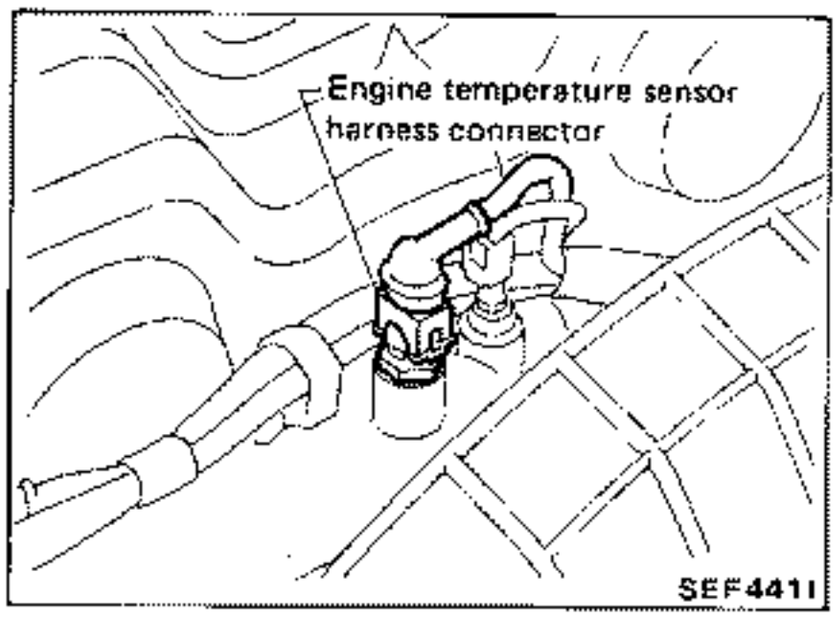

SEF441I

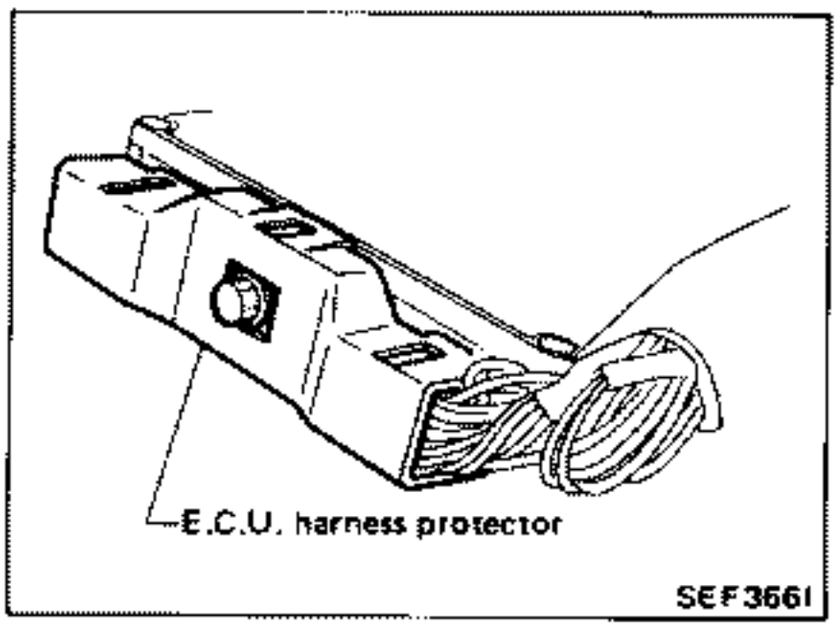

SEF366I

Diagnostic Procedure 25 (Cont'd)

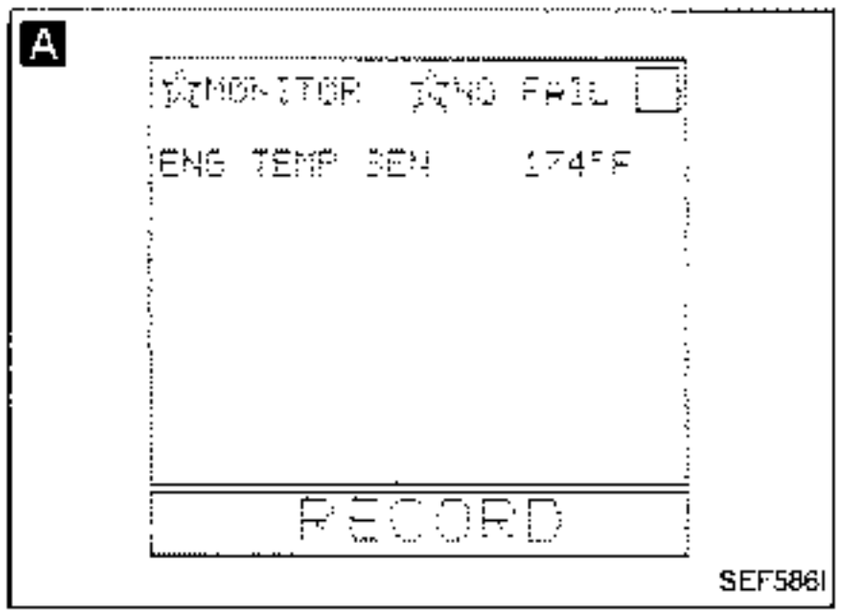

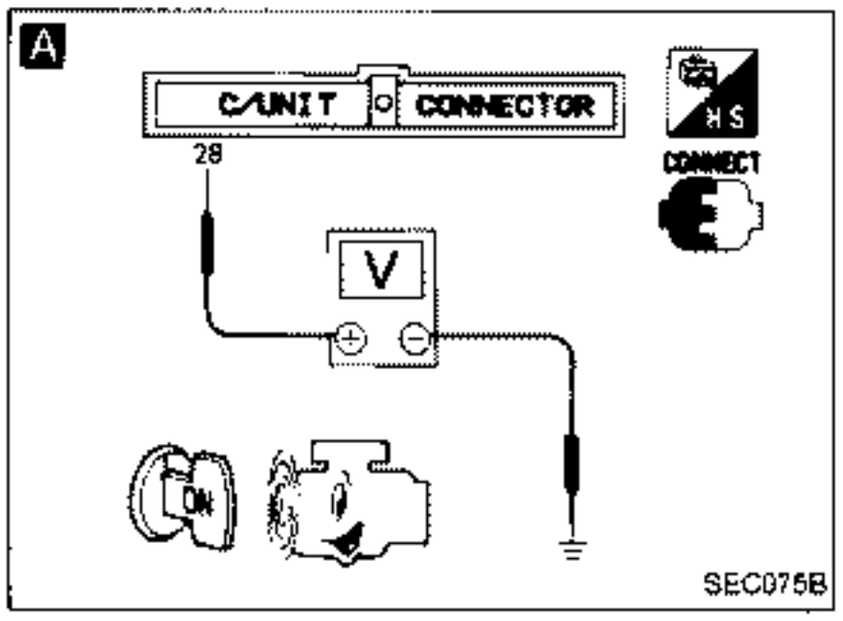

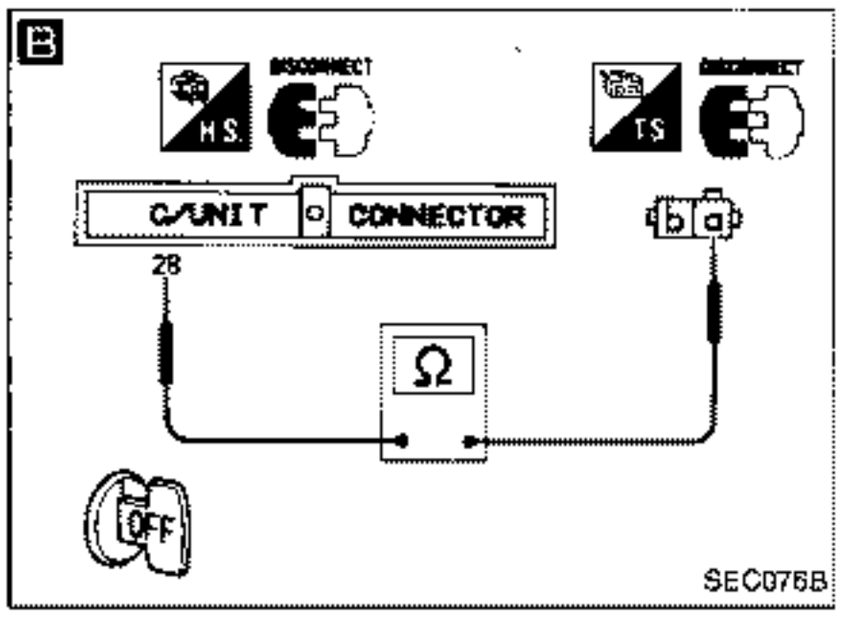

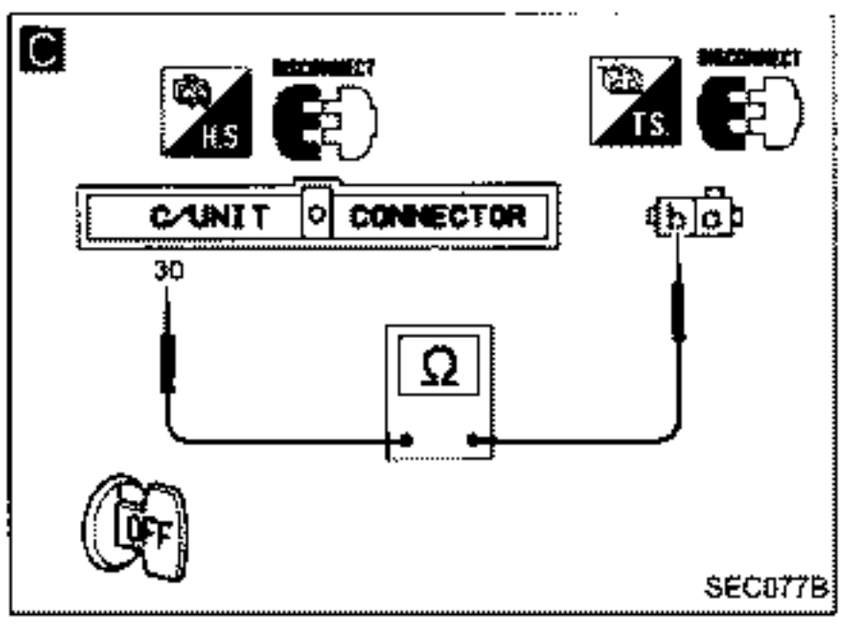

INSPECTION START

A

CHECK INPUT SIGNAL.

1) Start engine.
2) Read engine temperature sensor signal in "DATA MONITOR" mode with CONSULT.

Engine temperature should gradually rise and reach more than 70°C (158°F) after engine warm-up.

OR

2) Make sure that voltage between E.C.U. terminal ㉘ and ground changes during engine warm-up.

Cold → Hot:
Approximately 5 - 0V

N.G. →

B

CHECK HARNESS CONTINUITY BETWEEN ENGINE TEMPERATURE SENSOR AND E.C.U.

1) Stop engine.
2) Disconnect engine temperature sensor harness connector.
3) Disconnect E.C.U. harness connector.
4) Check harness continuity between E.C.U. terminal ㉘ and terminal ⓐ.

Continuity should exist.

If N.G., repair harness or connectors.

O.K. ↓

CHECK COMPONENT (Engine temperature sensor).
Refer to "Electrical Components Inspection".
(See page EF & EC-178.)

O.K. ↓

C

CHECK GROUND CIRCUIT.

1) Stop engine.
2) Disconnect engine temperature sensor harness connector.
3) Disconnect E.C.U. harness connector.
4) Check harness continuity between E.C.U. terminal ㉚ and terminal ⓑ.

N.G. → Repair harness or connectors.

O.K. ↓

Reinstall any part removed.

↓

Erase the SELF-DIAGNOSTIC RESULTS memory.

↓

Perform driving test and then perform SELF-DIAGNOSTIC RESULTS (Mode II) again.

N.G. →

1) Perform E.C.U. input/output signal inspection test.
2) If N.G., recheck the E.C.U. pin terminals for damage. Check the connection at the E.C.U. harness connector.

O.K. ↓

INSPECTION END

Diagnostic Procedure 26

VEHICLE SPEED SENSOR

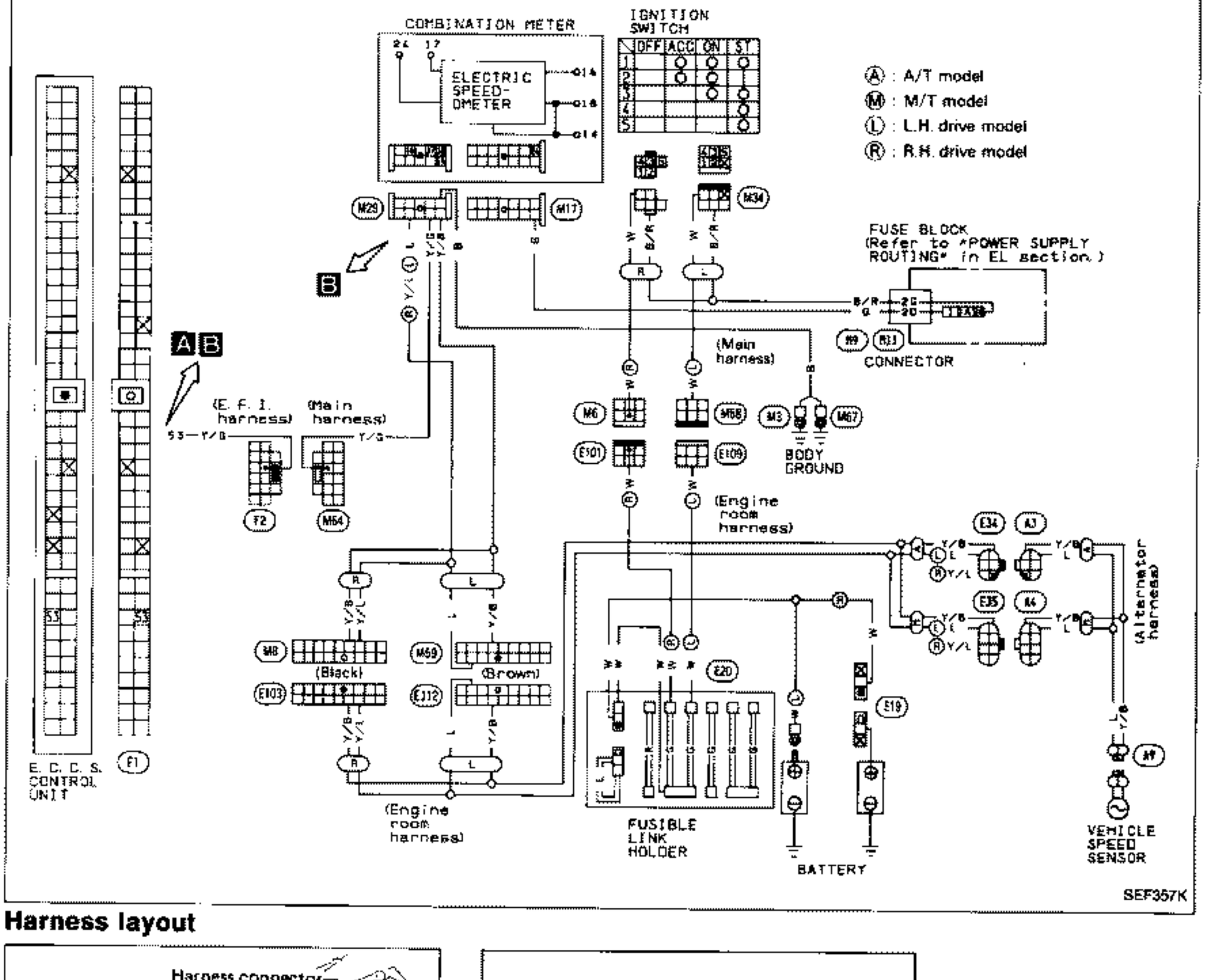

Harness layout

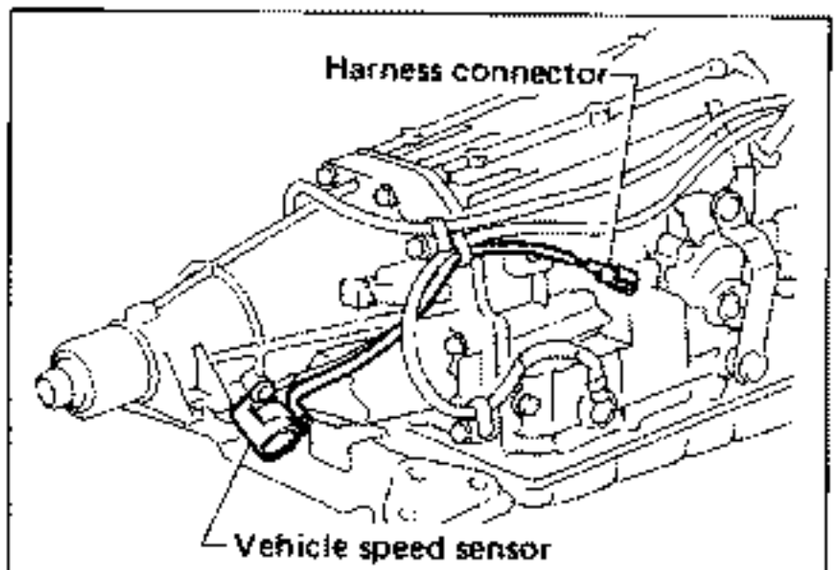

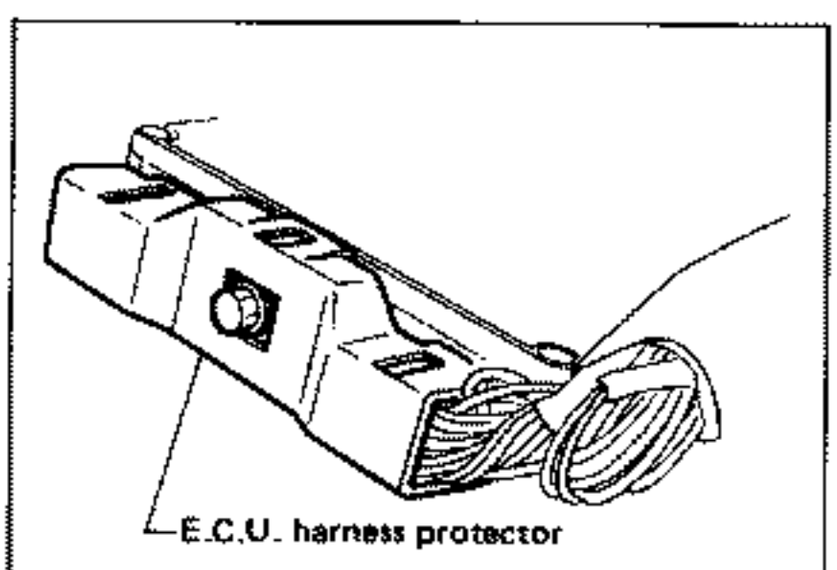

Diagnostic Procedure 26 (Cont'd)

A

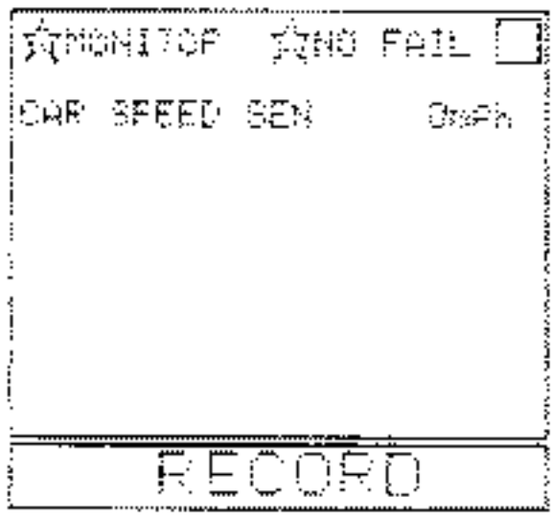

SEF587I

A

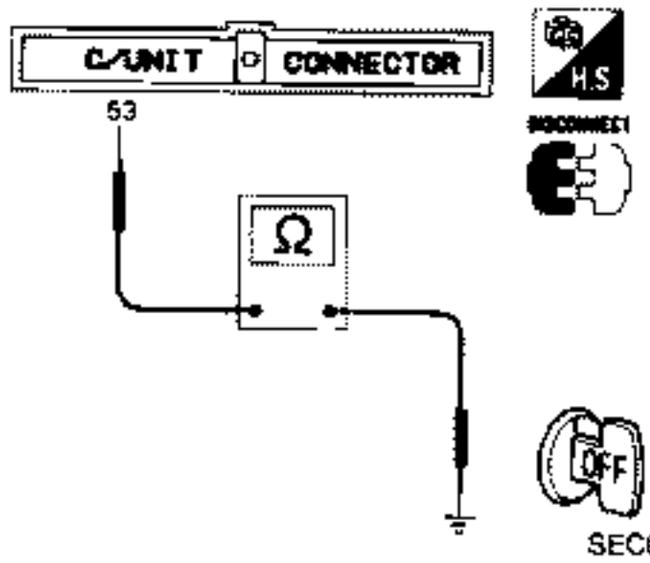

SEC091B

B

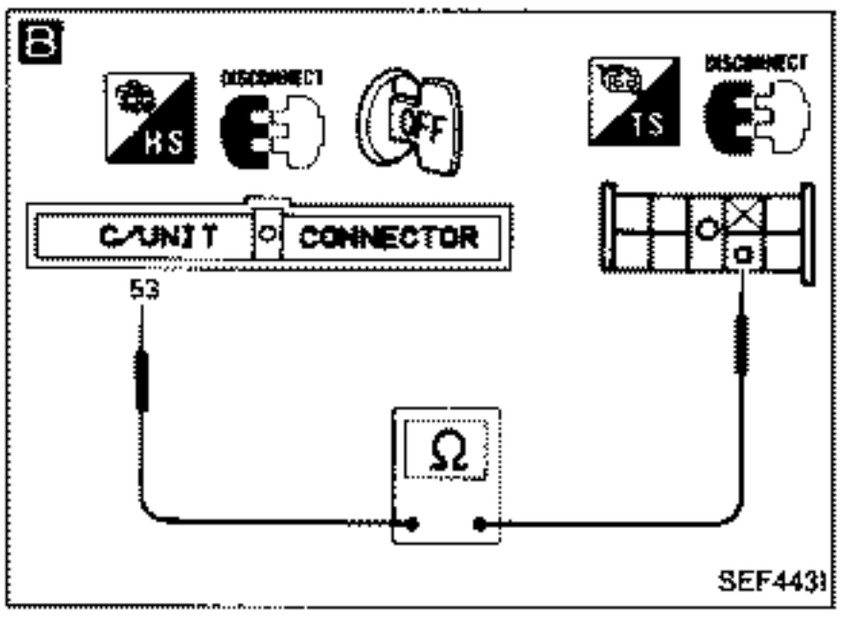

SEF443I

INSPECTION START

Make sure that speedometer in combination meter operates properly.

N.G. → Check power supply and ground circuit for instrument panel. (See EL section.) If N.G., repair harness or connectors.

O.K.

CHECK COMPONENT (Vehicle speed sensor). Refer to "Electrical Components Inspection". (See page EF & EC-179.)

A

CHECK INPUT SIGNAL

1) Read vehicle speed sensor signal in "DATA MONITOR" mode with CONSULT.

CONSULT value should be the same as the speedometer indication

—OR—

1) Jack up rear wheels.
2) Disconnect E.C.U. harness connector.
3) Check resistance between E.C.U. terminal ㊸ and ground. With transmission in neutral, turn both rear wheels.

Continuity should be intermittent.

N.G. → B

B

CHECK HARNESS CONTINUITY BETWEEN COMBINATION METER AND E.C.U.

1) Remove combination meter from instrument panel.
2) Disconnect combination meter harness connector ⑯ .
3) Check harness continuity between E.C.U. terminal ㊸, and terminal ⓐ.

Continuity should exist.

O.K.

Reinstall any part removed.

1) Perform E.C.U. input/output signal Inspection test.
2) If N.G., recheck the E.C.U. pin terminals for damage. Check the connection at the E.C.U. harness connector.

INSPECTION END

Diagnostic Procedure 27

IGNITION SIGNAL (Code No. 21)

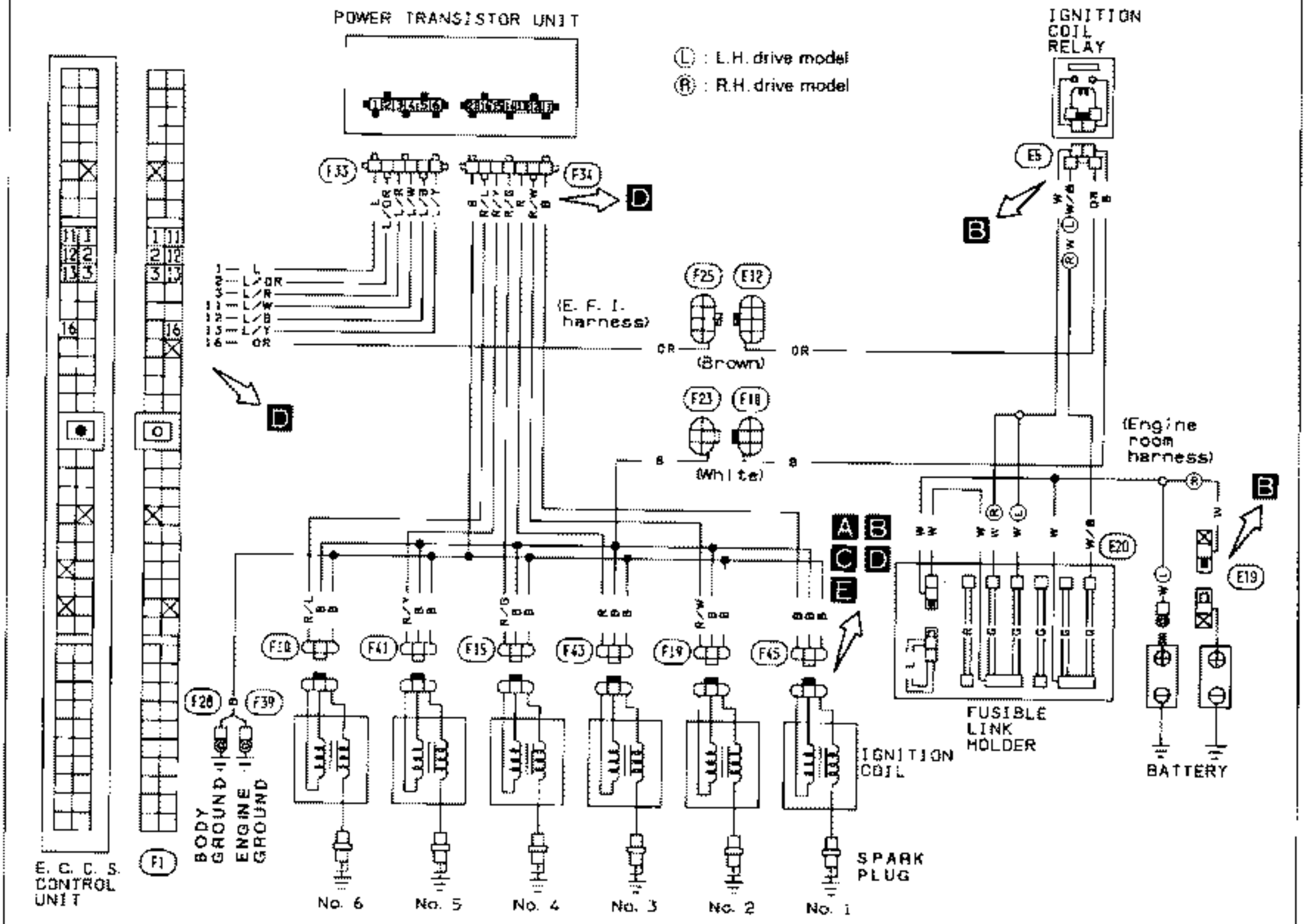

Harness layout

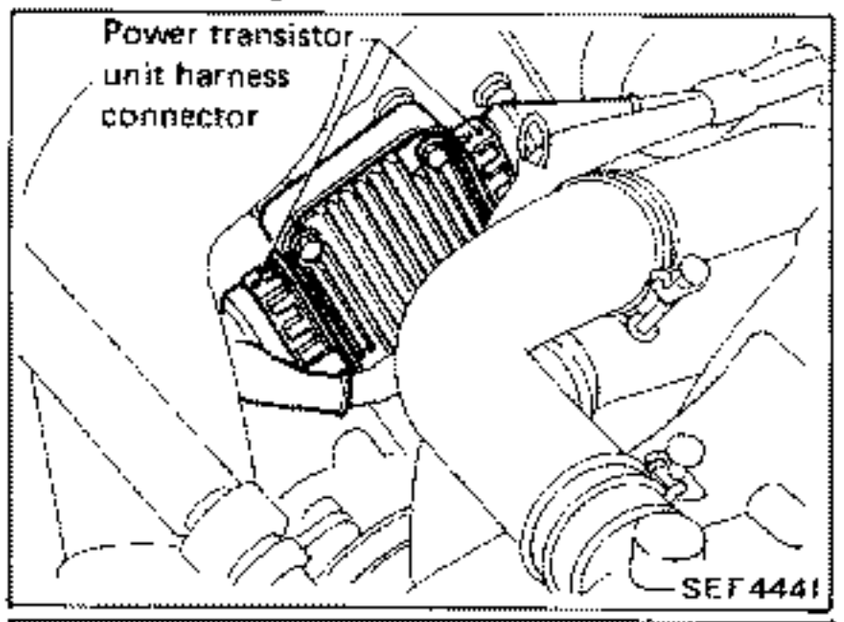

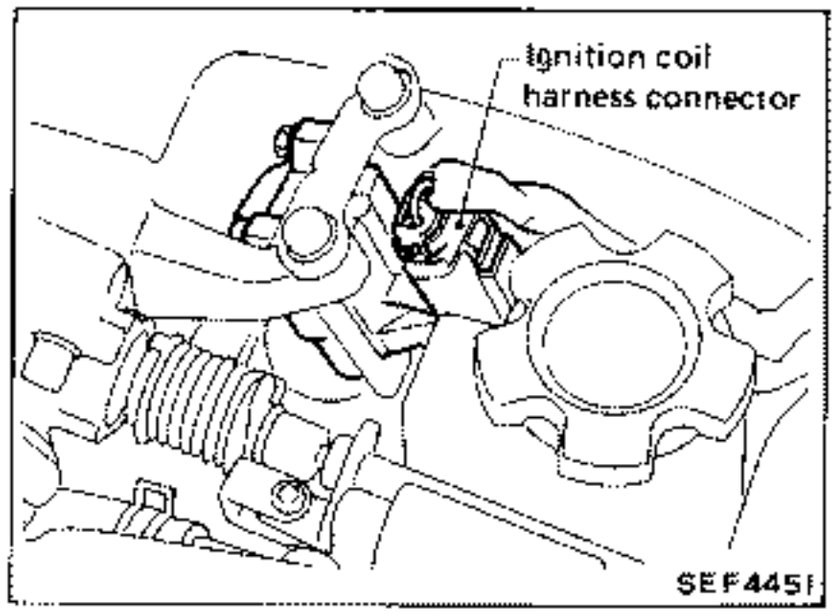

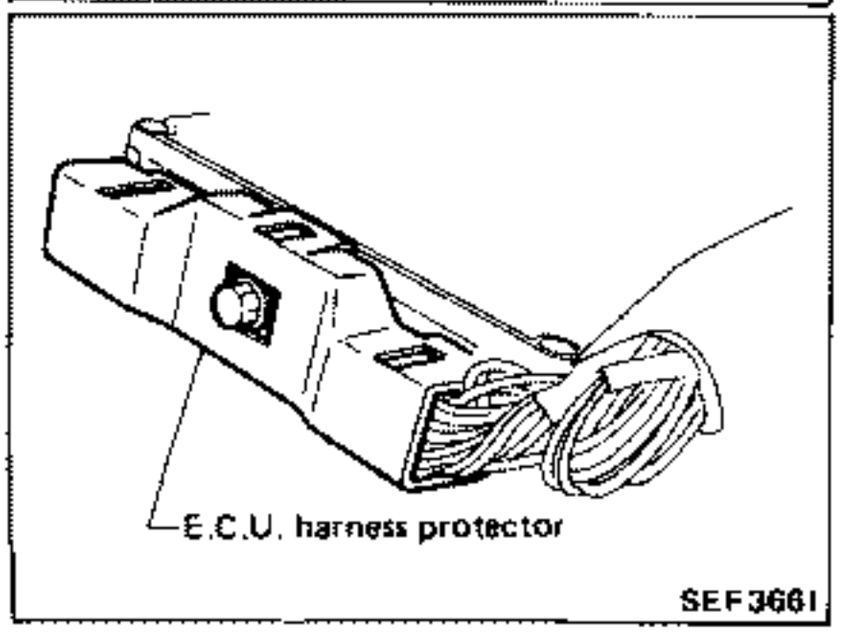

Diagnostic Procedure 27 (Cont'd)

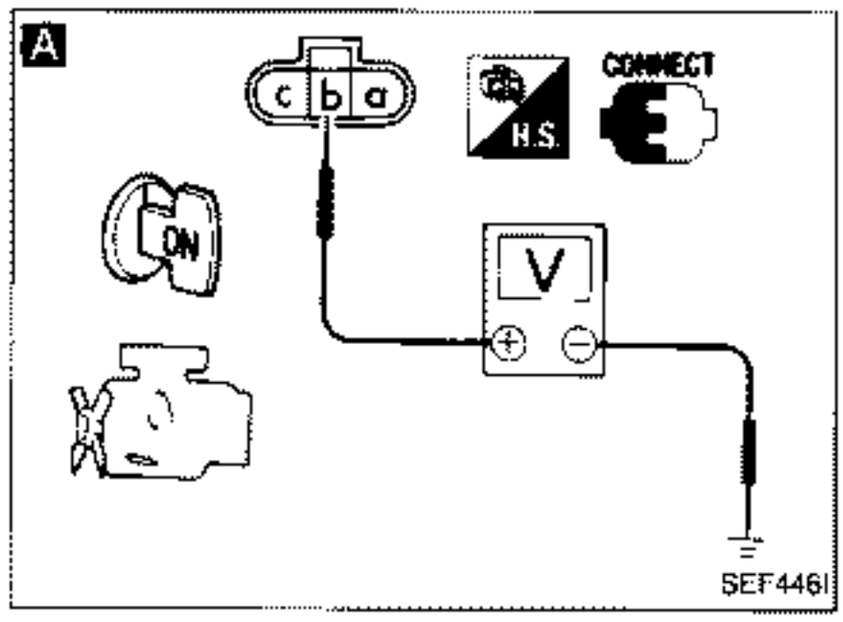

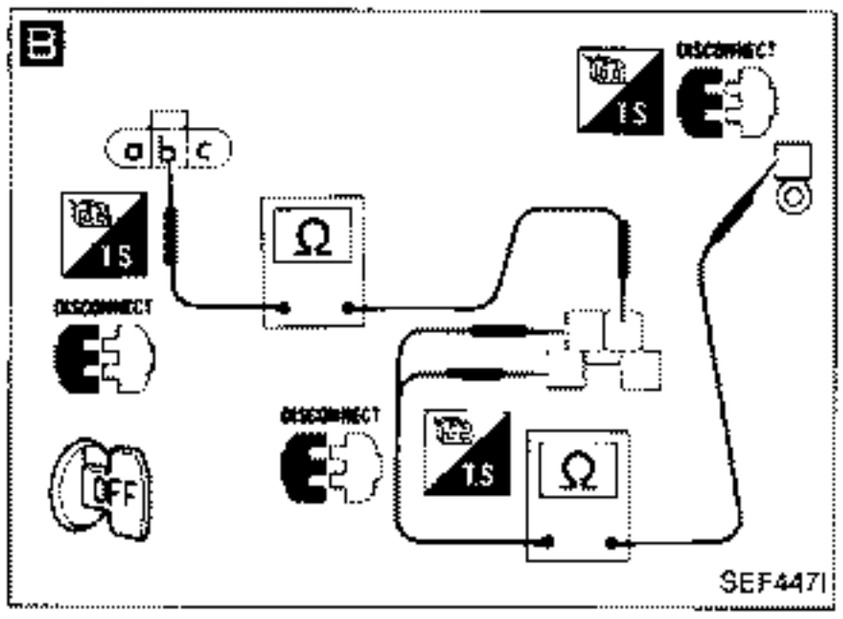

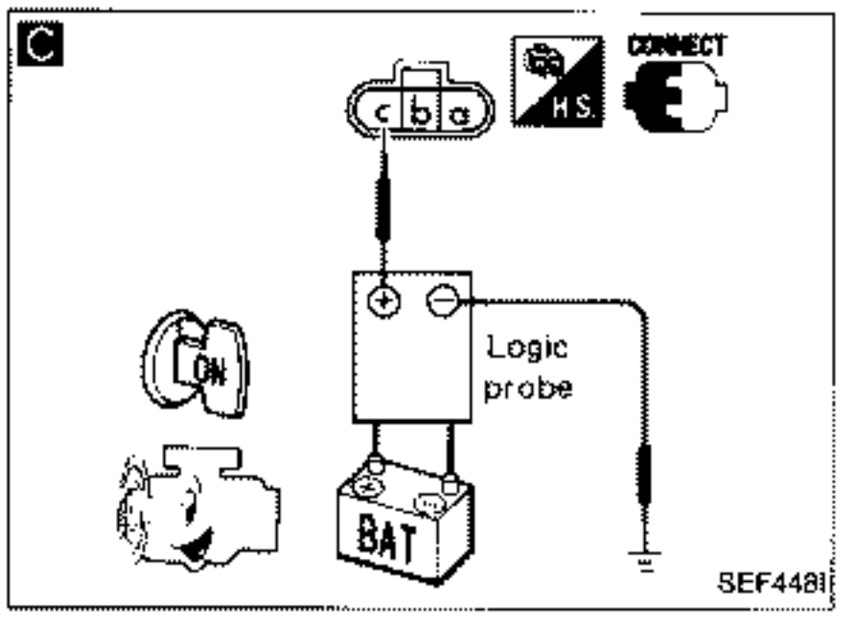

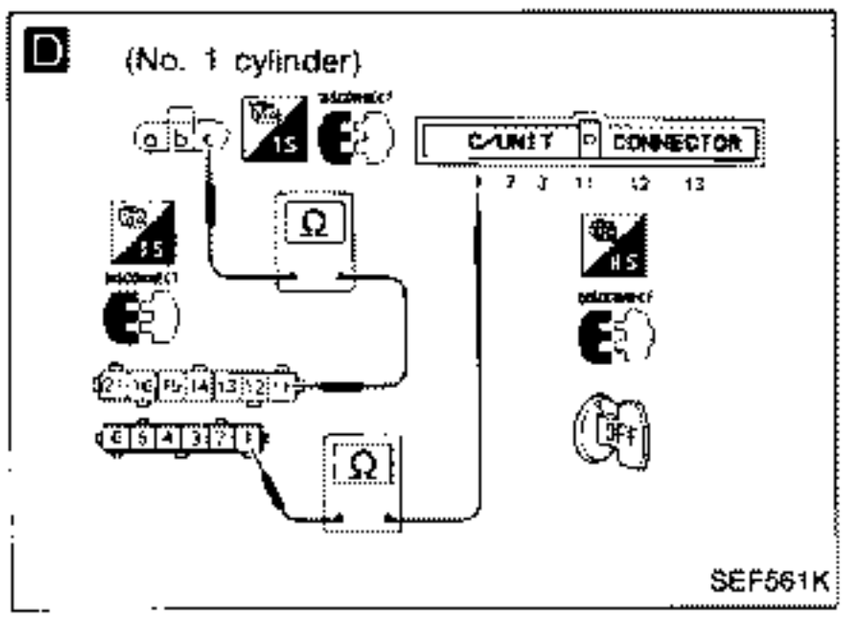

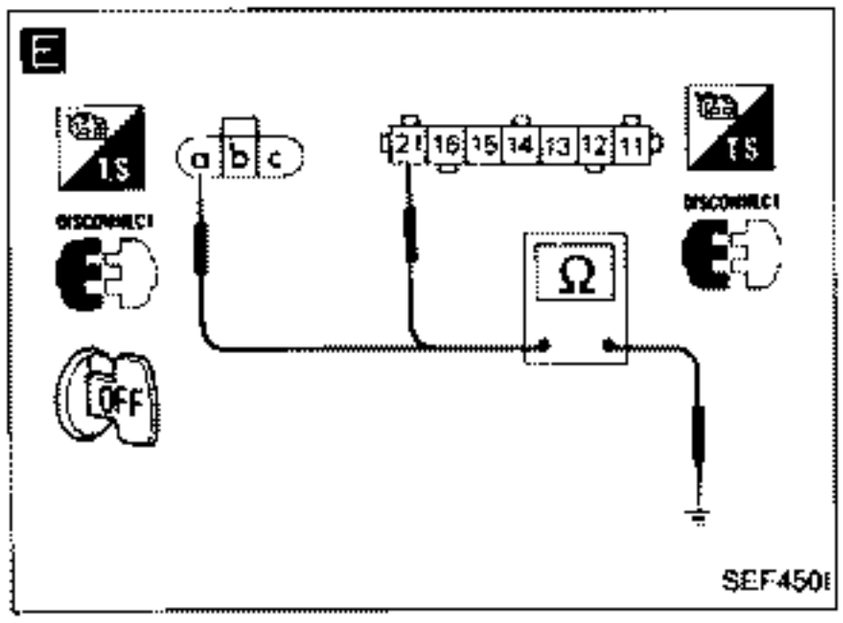

INSPECTION START

A

CHECK POWER SUPPLY.
1) Turn ignition switch "ON".
2) Check voltage between terminal ⓑ and ground.
Voltage: Approx. battery voltage

N.G. →

B

Check the following items.
1) Ignition coil relay
Refer to "Electrical Components Inspection".
(See page EF & EC-184.)
2) "G" fusible link
3) Harness continuity between ignition coil relay and ignition coils.
Continuity should exist.
4) Harness continuity between ignition coil relay and battery ⊕ terminal.
Continuity should exist.

O.K. ↓

C

CHECK OUTPUT SIGNAL.
1) Start engine.
2) With logic probe make sure that pulse signal exists between terminal ⓒ and ground.
Pulse signal should exist.

N.G. →

D

Check the following items.
1) Power transistor unit
Refer to "Electrical Components Inspection".
(See page EF & EC-179.)
2) Harness continuity between terminal ⓒ and power transistor terminals ⑪ (No. 1 cylinder), ⑫ (No. 2 cylinder), ... ⑯ (No. 6 cylinder).
Continuity should exist.
3) Harness continuity between power transistor terminals and E.C.U. terminals.
⑪ - ①　⑪ - ④
⑫ - ②　⑫ - ⑤
⑬ - ③　⑬ - ⑥
Continuity should exist.

O.K. ↓

E

CHECK GROUND CIRCUIT.
1) Stop engine.
2) Disconnect ignition coil and power transistor harness connectors.
3) Check harness continuity between terminal ⓐ (㉑) and ground.
Continuity should exist.

N.G. → Repair or replace harness.

O.K. ↓

Reinstall any part removed.

Diagnostic Procedure 27 (Cont'd)

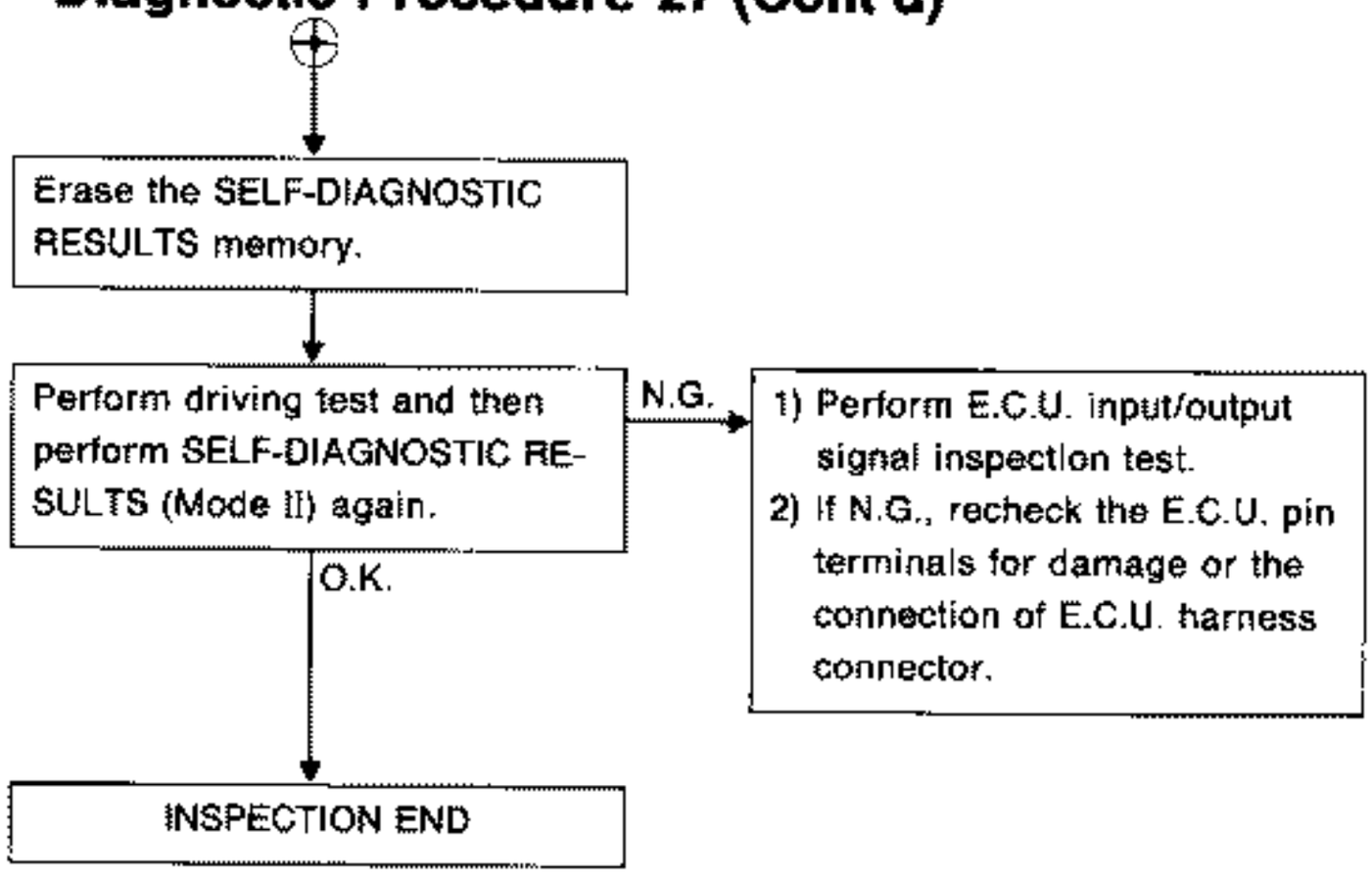

NOTE

Diagnostic Procedure 28

ENGINE CONTROL UNIT

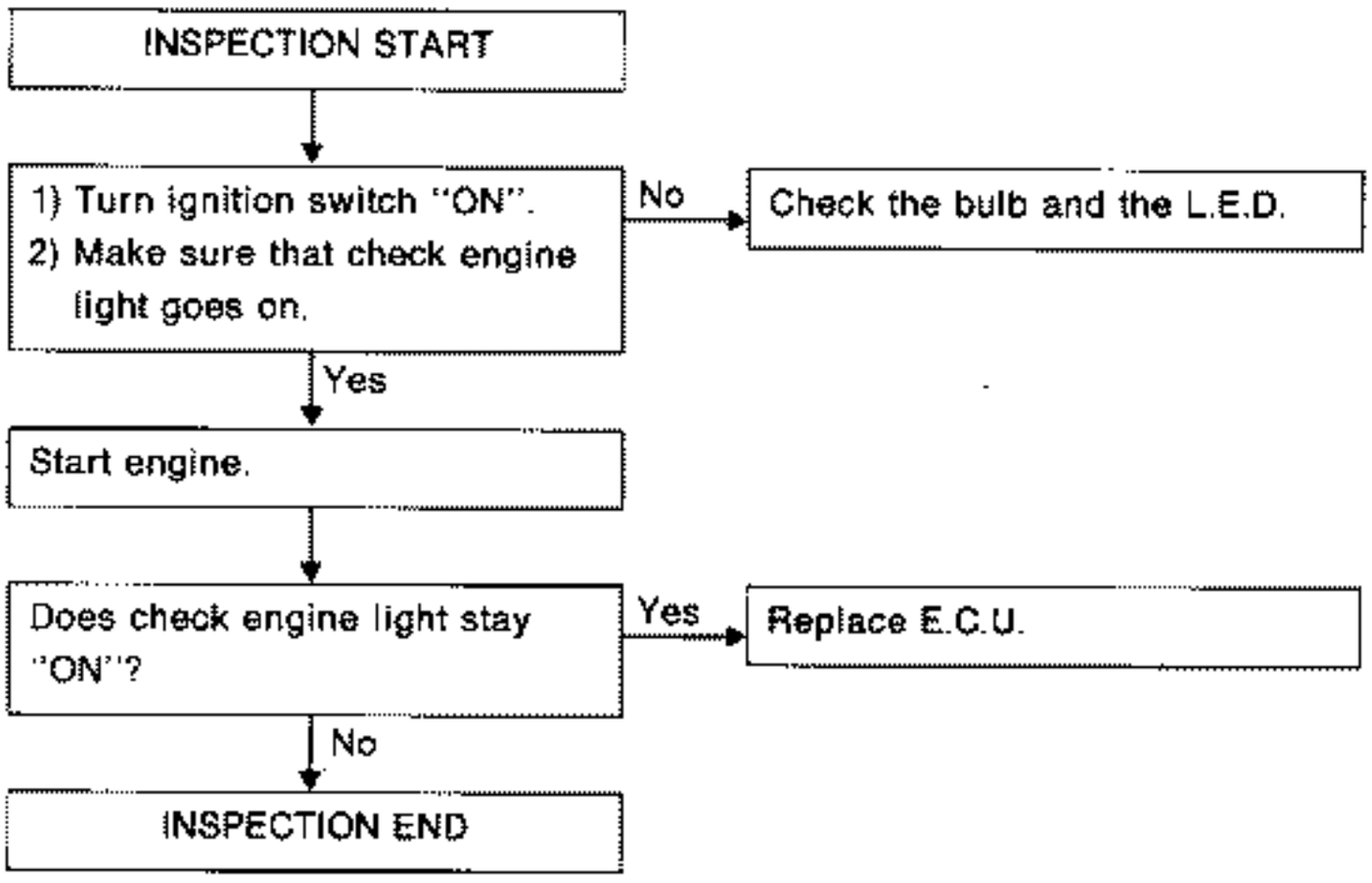

NOTE

Diagnostic Procedure 29

E.G.R. FUNCTION

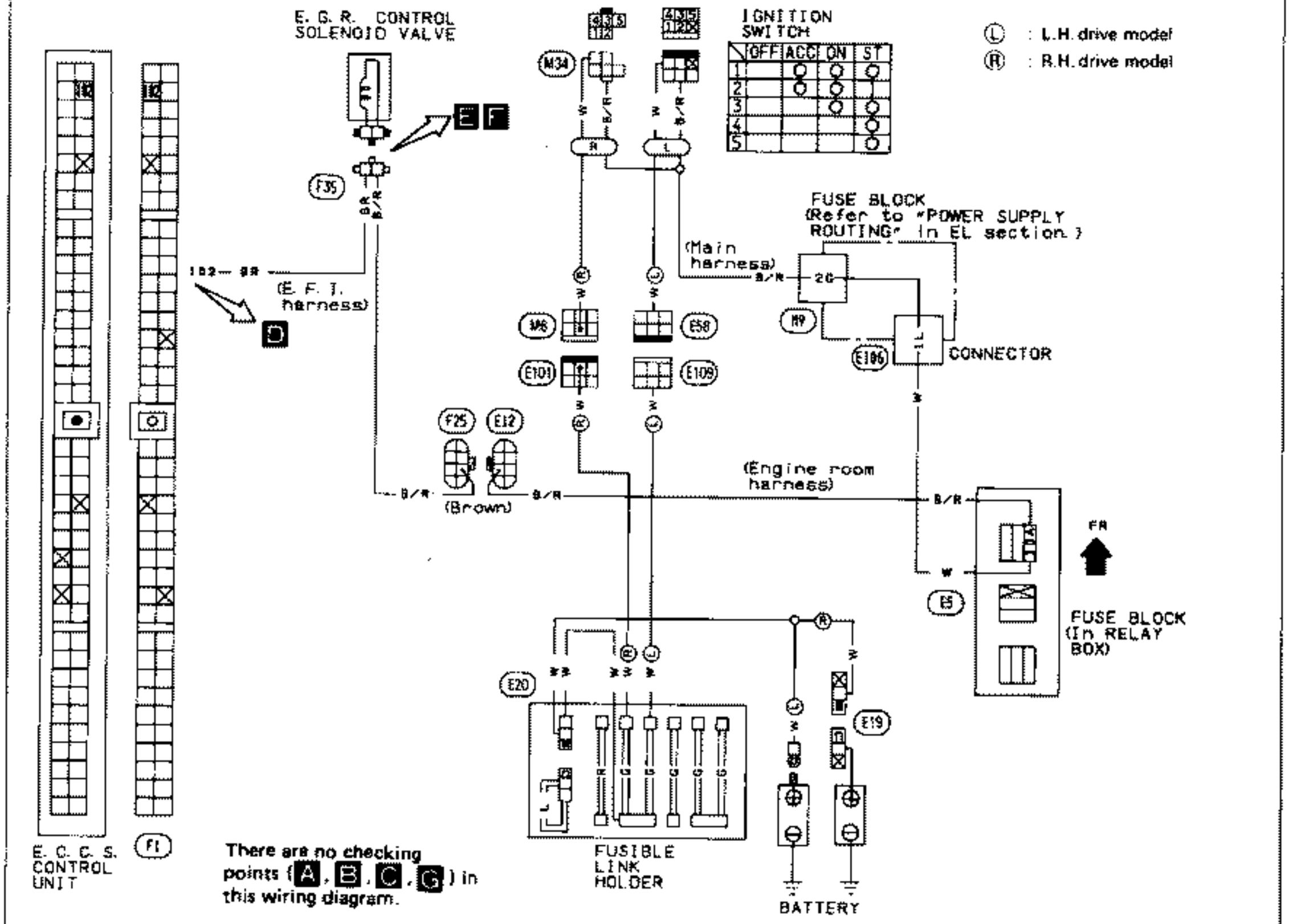

SEF359K

Harness layout

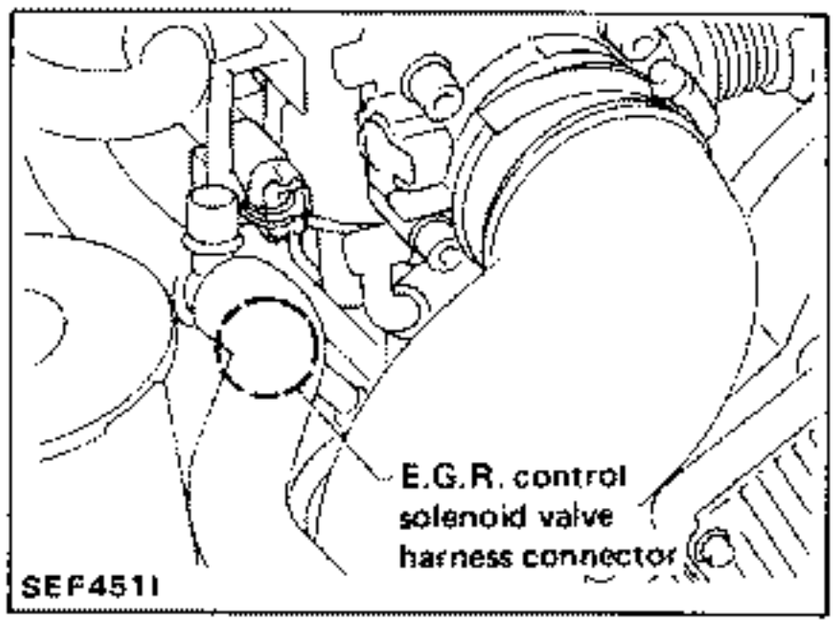

SEF451I

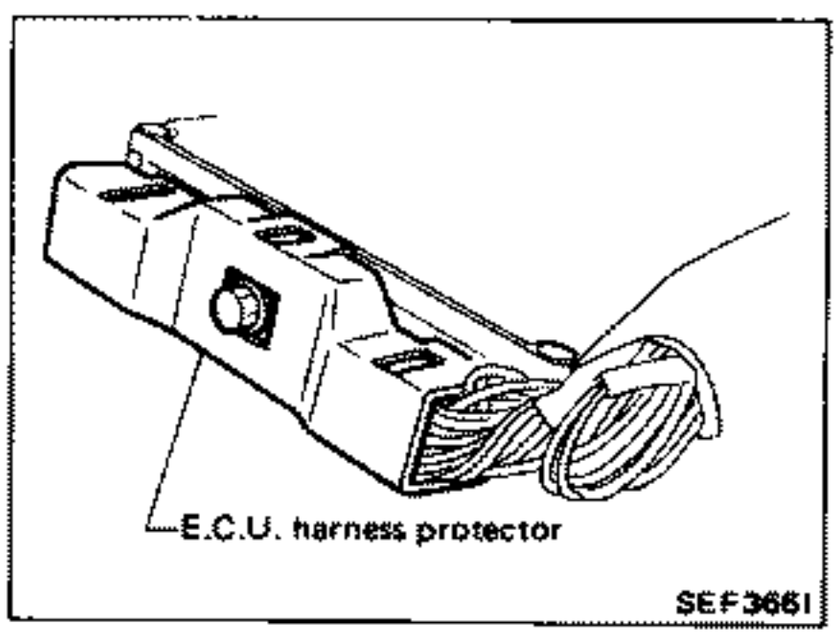

SEF366I

Diagnostic Procedure 29 (Cont'd)

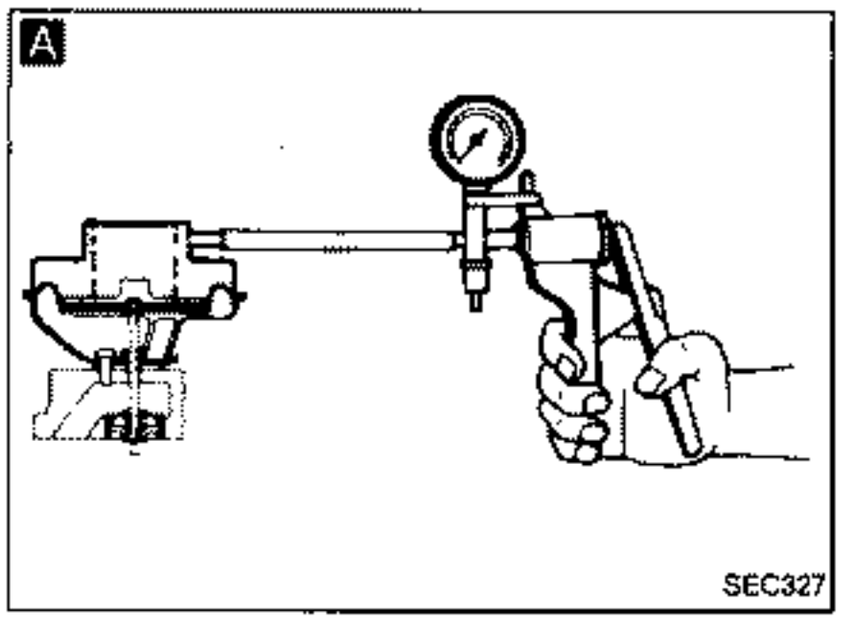

INSPECTION START

A

CHECK E.G.R. CONTROL VALVE OPERATION.
Make sure that E.G.R. control valve lifts up when applying vacuum.

N.G. → Replace or repair E.G.R. control valve.

O.K.

B

CHECK VACUUM SOURCE TO E.G.R. CONTROL VALVE.
1) Disconnect vacuum hose connected to E.G.R. control solenoid valve.
2) Make sure vacuum exists when racing engine.

N.G. → CHECK THROTTLE CHAMBER VACUUM PORT FOR CLOGGING.

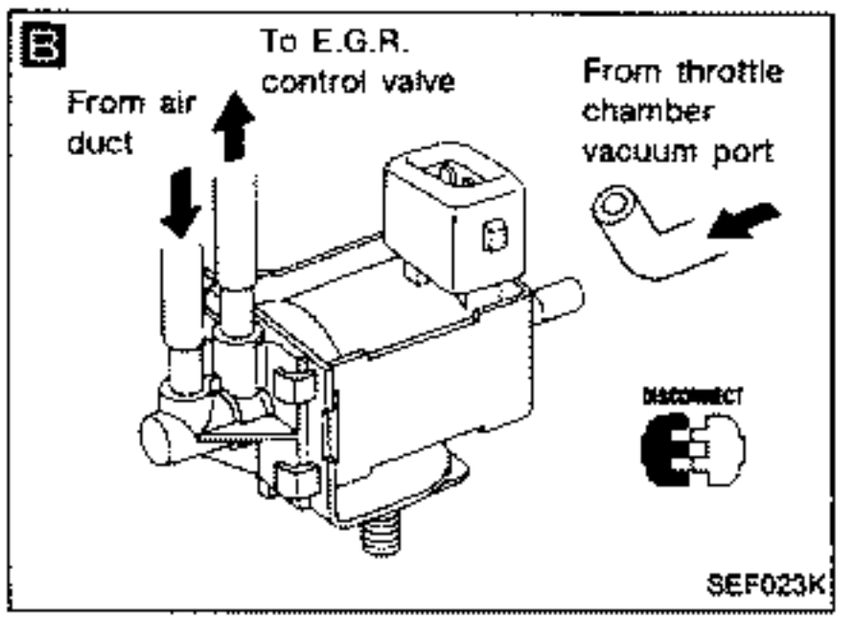

O.K.

C

CHECK VACUUM HOSE.
Check vacuum hose for clogging, cracks or improper connections.

N.G. → If necessary, replace vacuum hose or reconnect vacuum hose firmly.

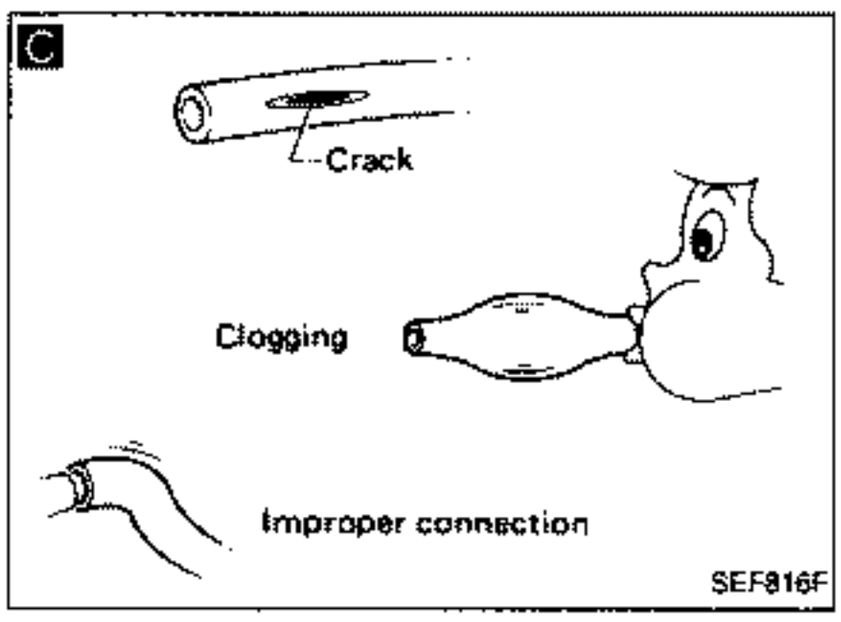

O.K.

D

CHECK E.C.U. OUTPUT SIGNAL.
1) Check voltage between E.C.U. terminal (102) and ground under the following conditions.

Engine condition	Voltage
Idle	0.7 - 0.8V
Racing (Less than approx. 3,000 rpm)	Battery voltage

N.G. → E CHECK POWER SOURCE TO E.G.R. CONTROL SOLENOID VALVE.
1) Stop engine.
2) Turn ignition switch "ON".
3) Check voltage between terminal (b) and ground.
Voltage: Battery voltage

F CHECK GROUND CIRCUIT.
1) Turn ignition switch "OFF".
2) Disconnect E.C.U. harness connector.
3) Disconnect E.G.R. control solenoid valve harness connector.
4) Check resistance between E.C.U. terminal (102) and terminal (b).
Resistance:
Approximately 0Ω
If N.G. repair or replace harness.

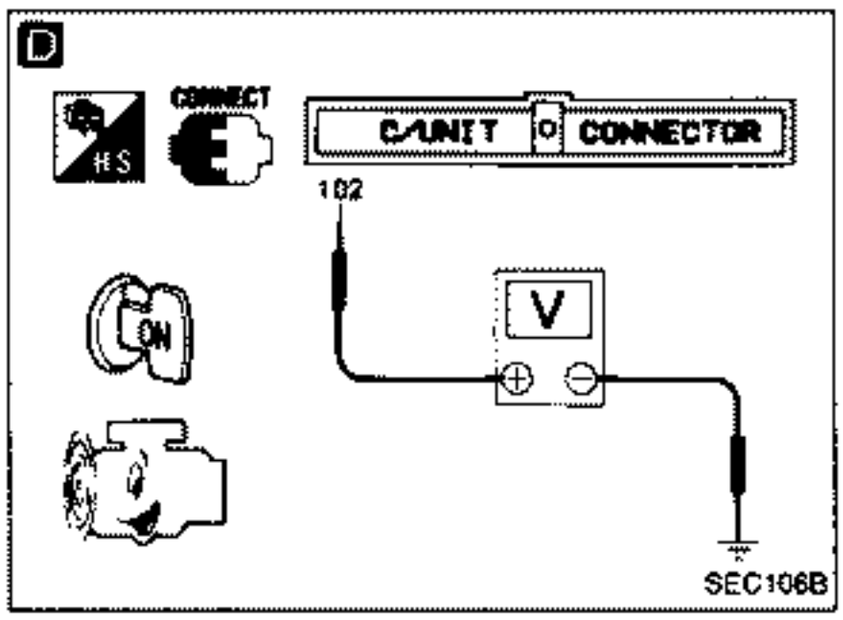

O.K.

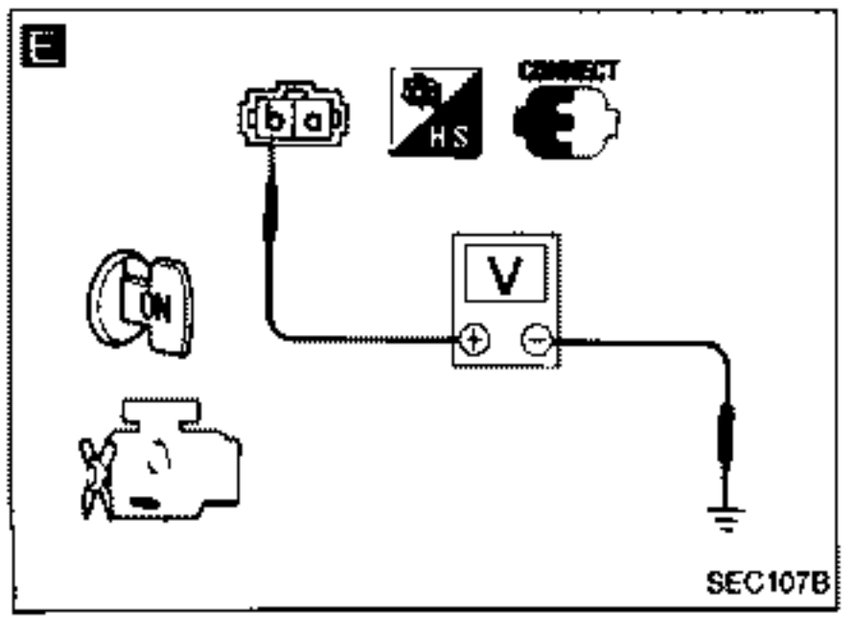

Diagnostic Procedure 29 (Cont'd)

F

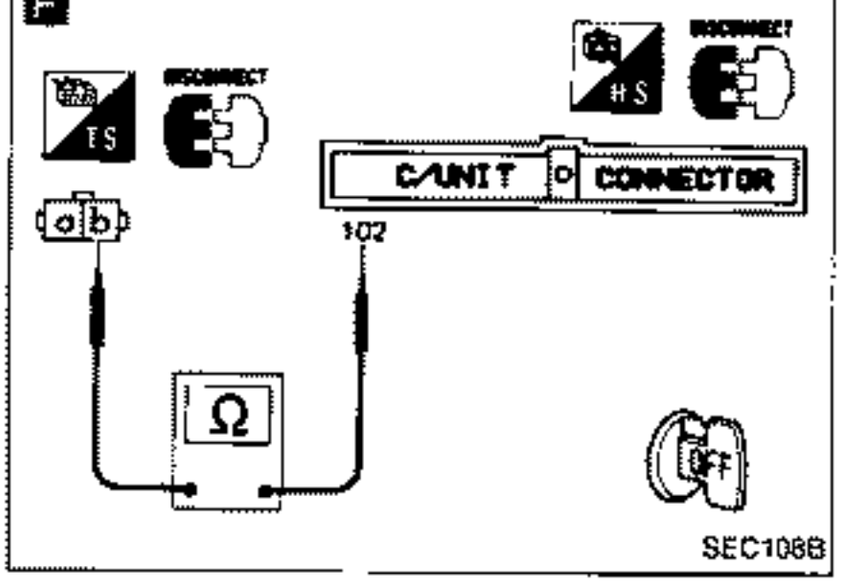

G

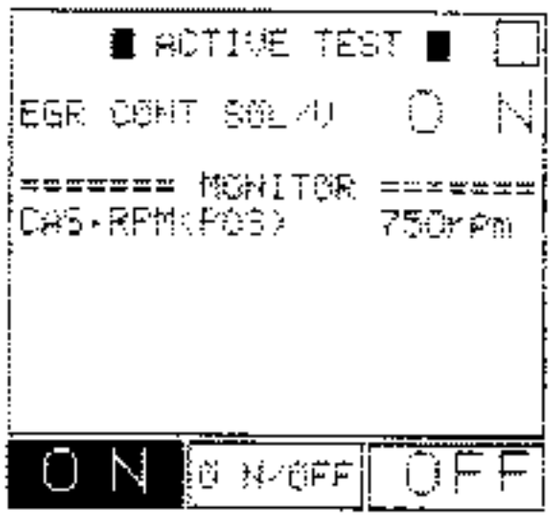

H ROAD TEST

Test condition

Drive vehicle under the following conditions with a suitable shift position.

(1) Engine speed:
2,200±200 rpm

(2) Intake manifold vacuum:
−30.0±10.0 kPa (−300±100 mbar, −225±75 mmHg, −8.86±2.95 inHg)

Driving mode

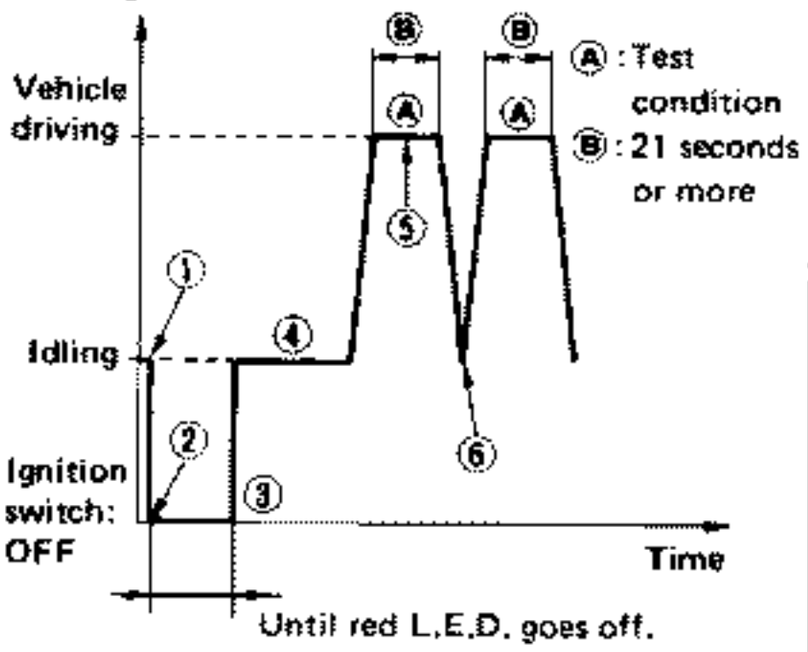

① Start engine and warm it up sufficiently.
② Turn off ignition switch and keep it off until red L.E.D. goes off.
③ Start engine and make sure that air conditioner switch and rear defogger are turned "OFF" during driving test.
④ Keep engine running for at least 3 minutes.
⑤ Shift to suitable gear position and drive in "Test condition" for at least 21 seconds.
⑥ Decrease engine revolutions to less than 2,000 rpm.
⑦ Repeat steps ⑤ through ⑥ at last 1 more time.

SEF302H

G

CHECK COMPONENT.

Turn E.G.R. control solenoid valve "ON" and "OFF" in "ACTIVE TEST" mode with CONSULT and check operating sound.

— OR —

Check E.G.R. control solenoid valve.
Refer to "Electrical Components Inspection".
(See page EF & EC-180.)

N.G. → Replace E.G.R. control solenoid valve.

O.K. ↓

Reinstall any part removed.

H

Perform driving test under the following conditions:
1) Warm up engine sufficiently.
2) Use test driving modes indicated in figure H.

N.G. → Perform electric control system inspection.

O.K. ↓

INSPECTION END

NOTE

Diagnostic Procedure 30

EXHAUST GAS SENSOR

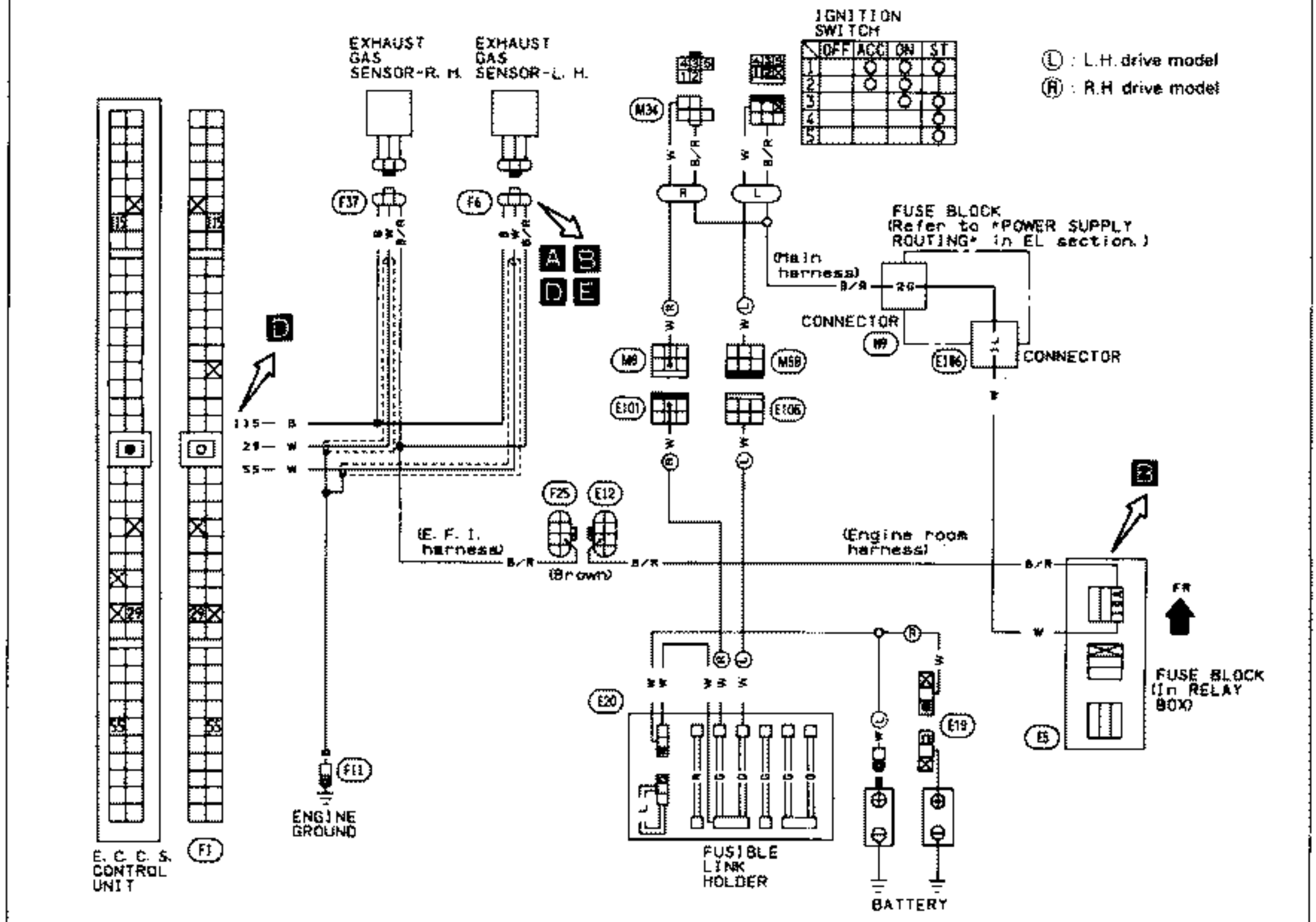

Harness layout

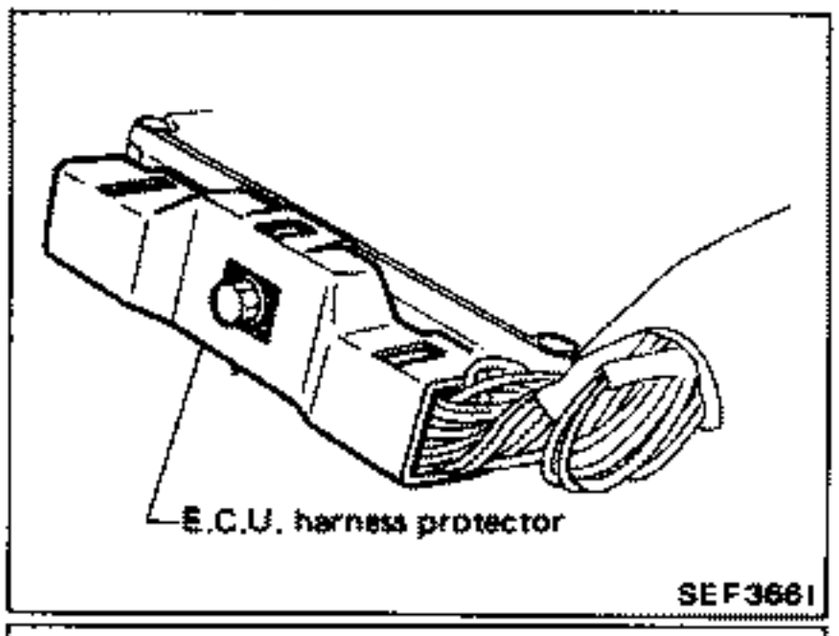

SEF366I

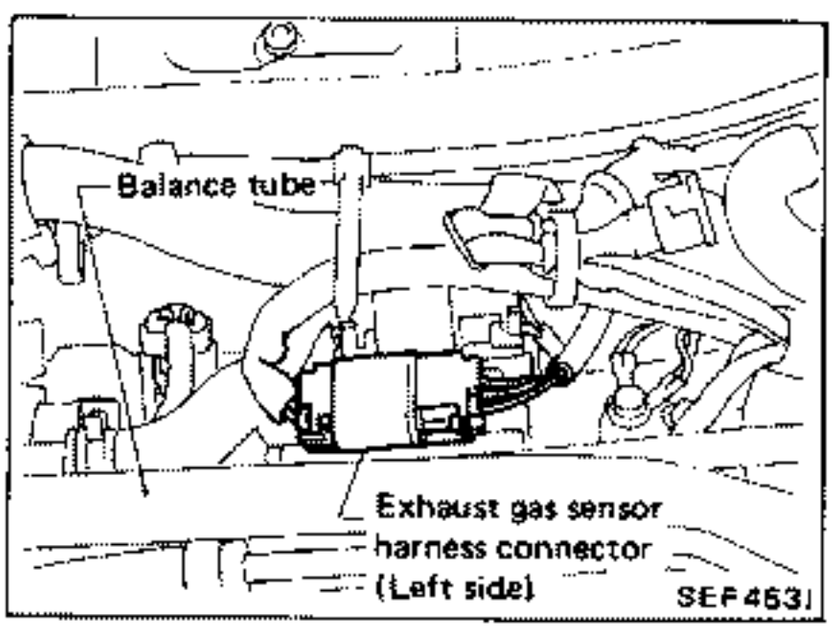

SEF453I

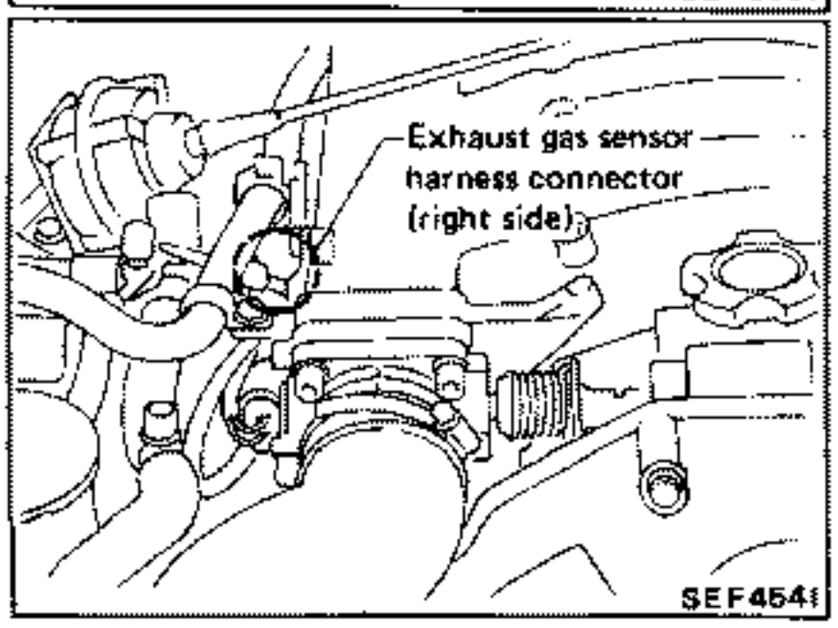

SEF454I

Diagnostic Procedure 30 (Cont'd)

A

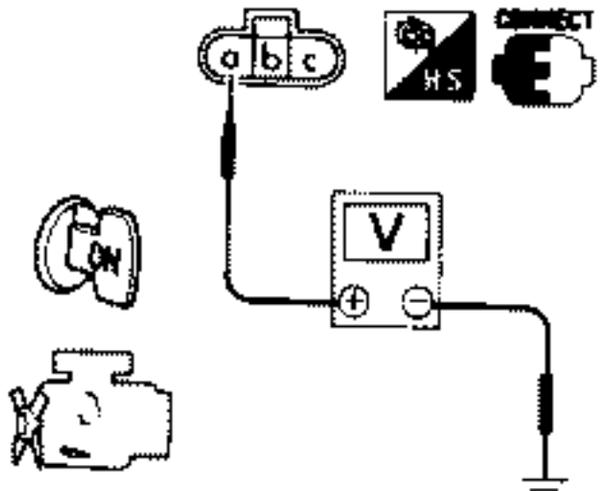

SEC111B

B

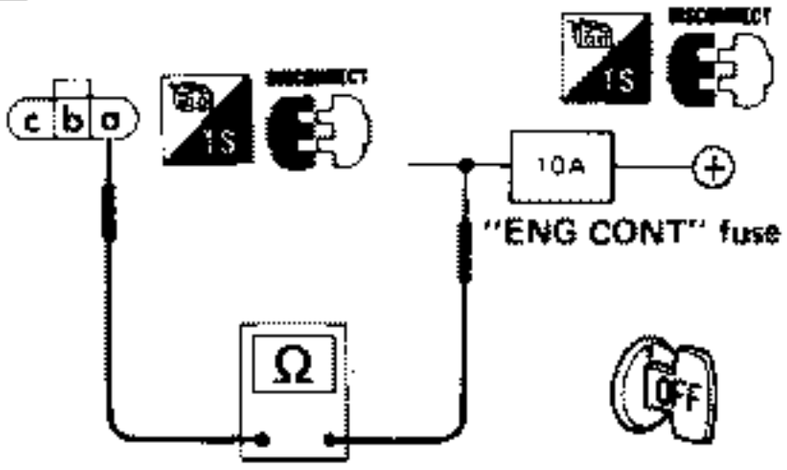

SEC112B

C

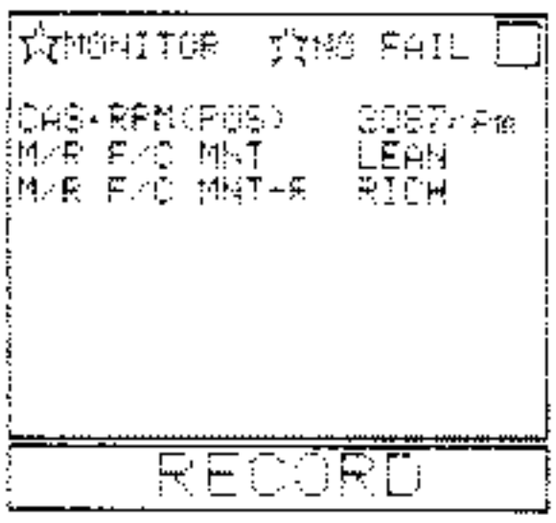

SEF160I

C

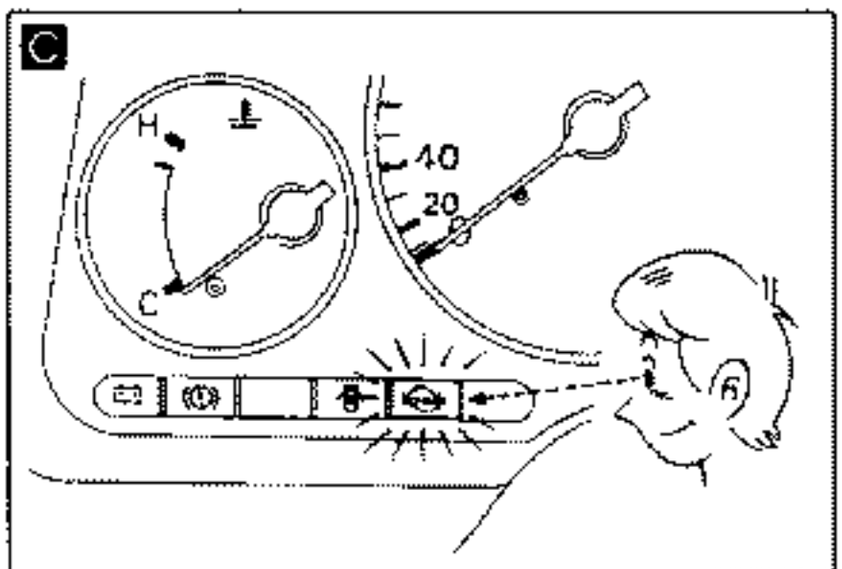

SEF025K

D

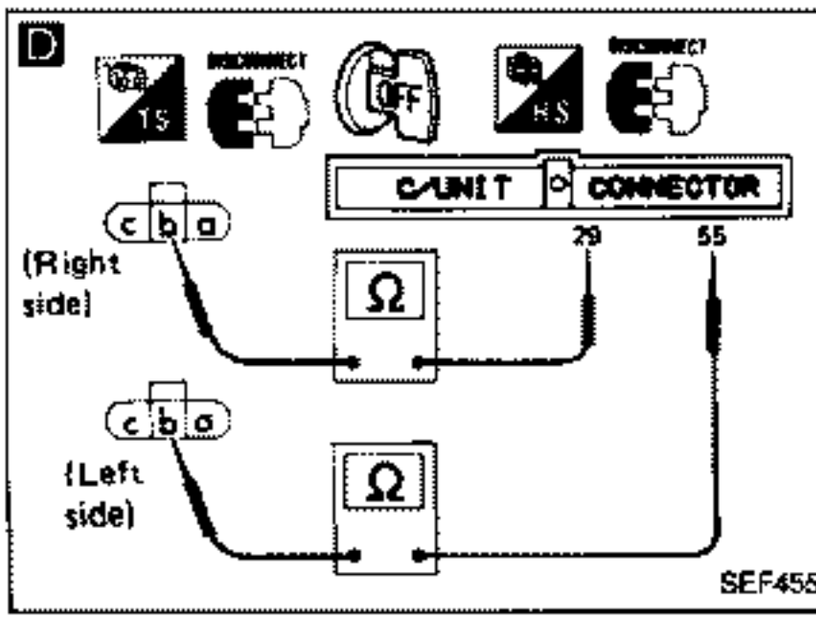

SEF455I

INSPECTION START

A

CHECK POWER SUPPLY.
1) Turn ignition switch "ON".
2) Check voltage between terminal ⓐ and ground.
Voltage: Battery voltage

N.G. → B

O.K.

C

CHECK INPUT SIGNAL.
1) Start engine and warm it up sufficiently.
2) Make sure that "M/R F/C MNT(R)" in "DATA MONITOR" mode indicates "RICH" and "LEAN" periodically more than 5 times during 10 seconds at 2,000 rpm.

OR

2) Make sure that check engine light goes on and off periodically more than 5 times during 10 seconds at 2,000 rpm in self-diagnostic results Mode II.

N.G. → D

O.K.

E

CHECK GROUND CIRCUIT.
1) Stop engine.
2) Disconnect exhaust gas sensor harness connector.
3) Check harness continuity between terminal ⓒ and ground.
Continuity should exist.

N.G. → Repair harness or connectors.

O.K.

⊕

B

CHECK HARNESS CONTINUITY BETWEEN EXHAUST GAS SENSOR AND FUSE.
1) Turn ignition switch "OFF".
2) Disconnect exhaust gas sensor harness connector.
3) Disconnect "ENG CONT" fuse.
4) Check harness continuity between terminal ⓐ and the fuse.
Continuity should exist.
If N.G., repair harness or connectors.

D

CHECK HARNESS CONTINUITY BETWEEN EXHAUST GAS SENSOR AND E.C.U.
1) Stop engine.
2) Disconnect exhaust gas sensor harness connector.
3) Disconnect E.C.U. harness connector.
4) Check harness continuity between E.C.U. terminals and exhaust gas sensor terminals.
Right side: ㉙ - ⓑ
Left side: ㊺ - ⓑ
Continuity should exist.
If N.G., repair harness or connectors.

O.K.

Replace exhaust gas sensor.

Diagnostic Procedure 30 (Cont'd)

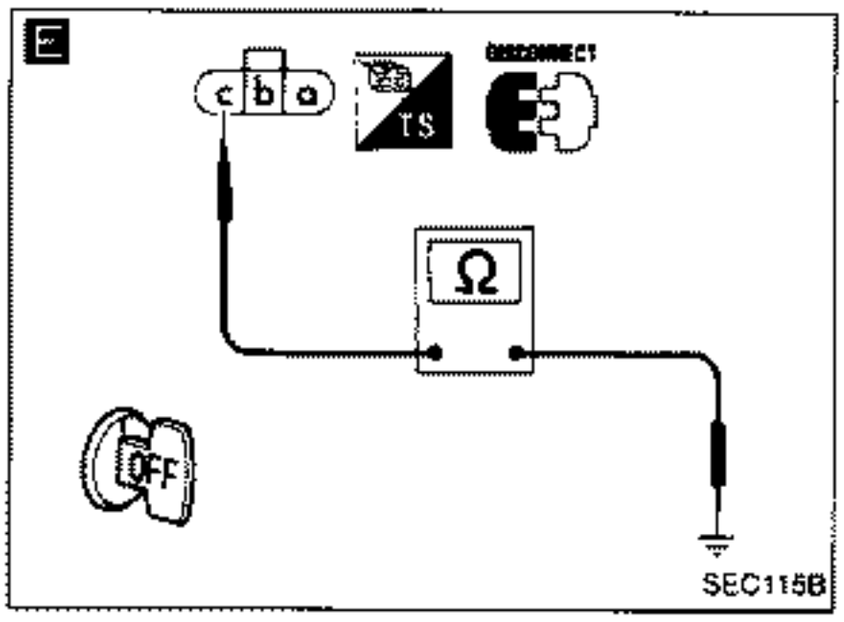

Reinstall any part removed.

Perform driving test again.

N.G.

1) Perform E.C.U. input/output signal inspection test.
2) If N.G., recheck the E.C.U. pin terminals for damage or the connection of E.C.U. harness connector.

O.K.

INSPECTION END

NOTE

Diagnostic Procedure 31

DETONATION SENSOR (Code No. 34)

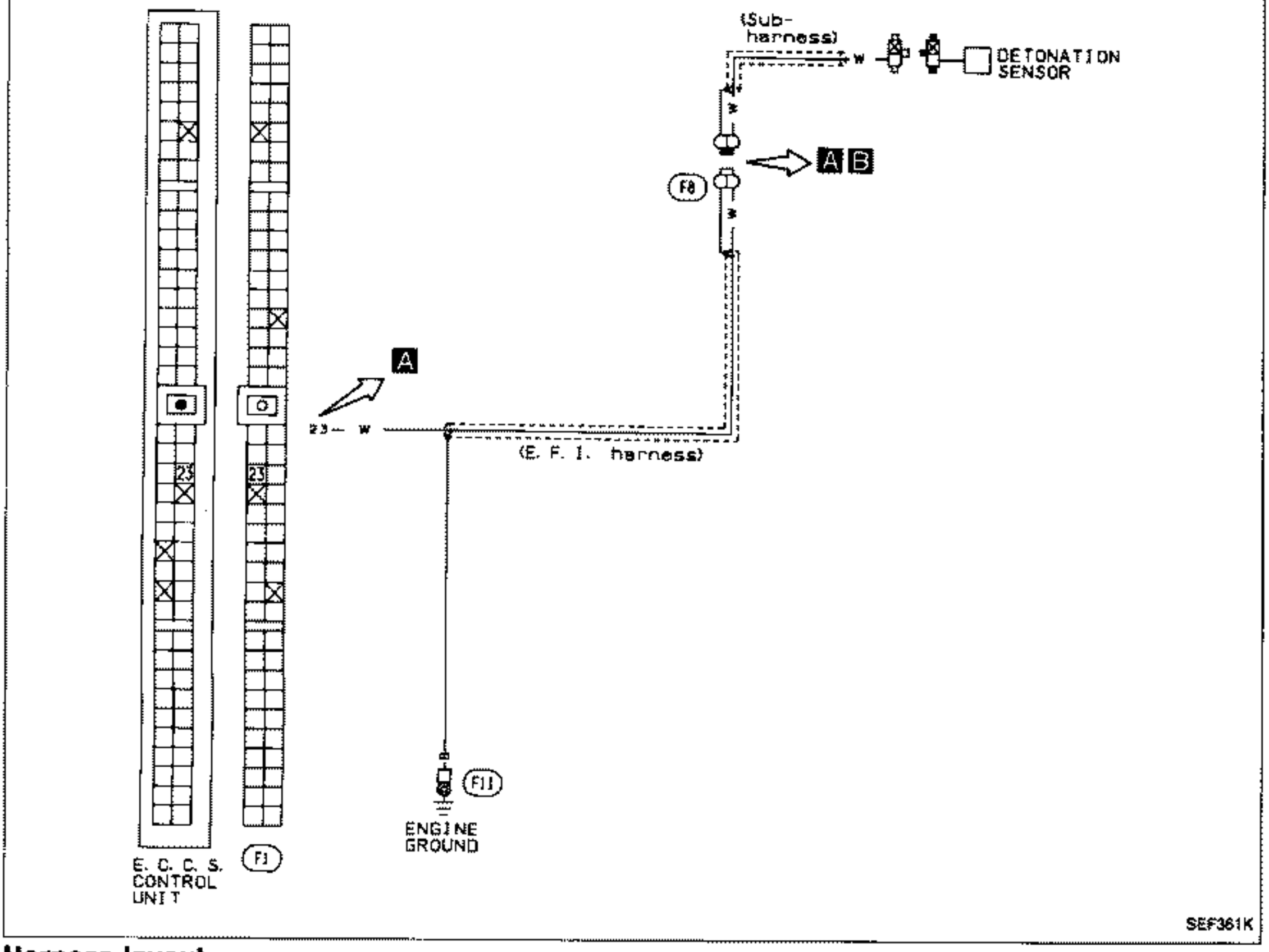

Harness layout

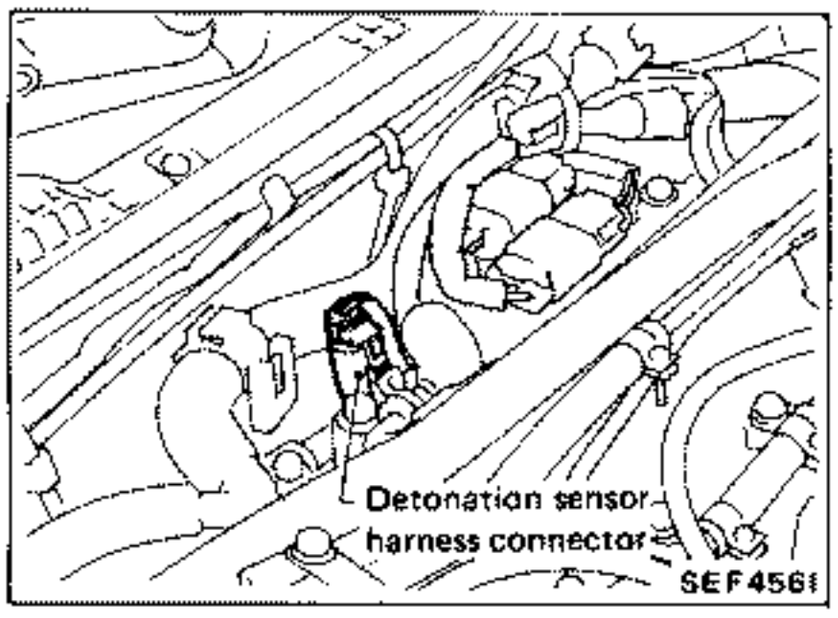

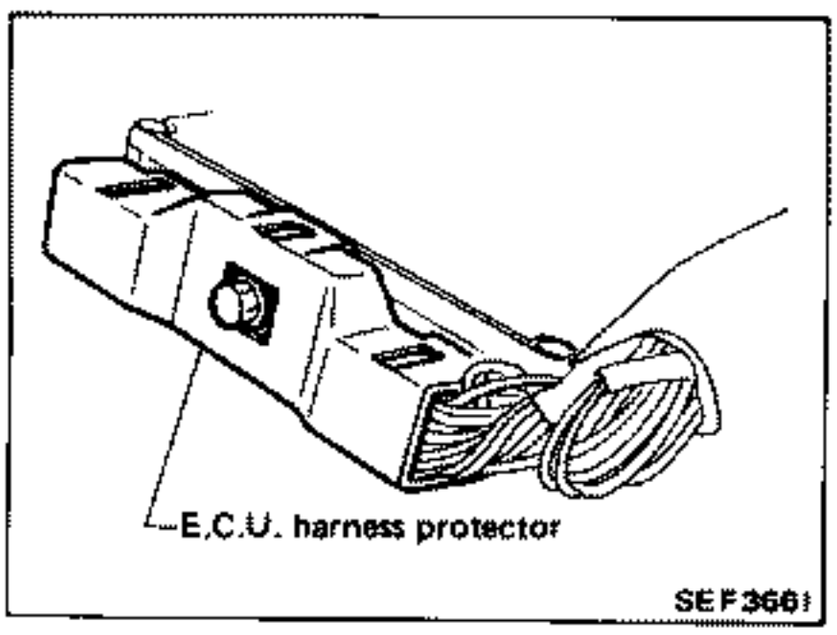

Diagnostic Procedure 31 (Cont'd)

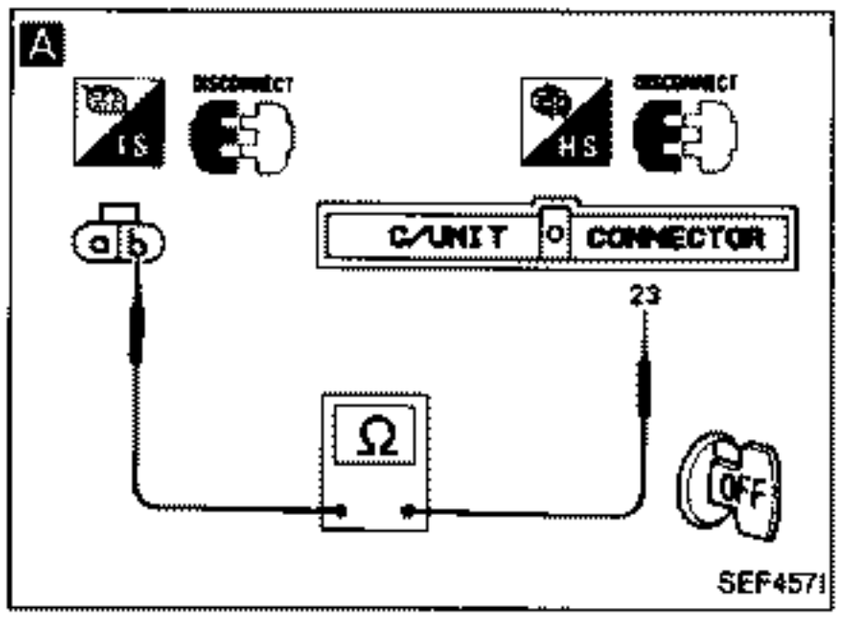

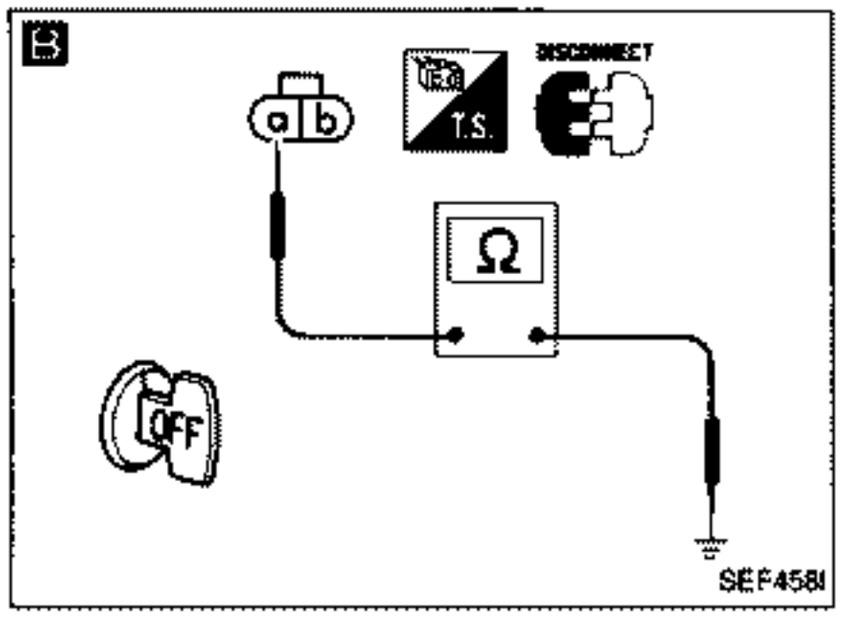

INSPECTION START

A

CHECK INPUT SIGNAL CIRCUIT.
1) Make sure that ignition switch is in "OFF" position.
2) Disconnect detonation sensor sub-harness connector.
3) Disconnect E.C.U. harness connector.
4) Check harness continuity between E.C.U. terminal ㉓ and terminal ⓑ.
Continuity should exist.

N.G. → Repair harness or connectors.

O.K. ↓

B

CHECK GROUND CIRCUIT.
1) Check harness continuity between terminal ⓐ and ground.
Continuity should exist.

N.G. → Repair harness or connectors.

O.K. ↓

CHECK COMPONENT
(Detonation sensor).
Refer to "Electrical Components Inspection".
(See page EF & EC-182.)

O.K. ↓

Reinstall any part removed.

↓

Erase the SELF-DIAGNOSTIC RESULTS memory.

↓

Perform driving test and then perform SELF-DIAGNOSTIC RESULTS (Mode II) again.

N.G. → 1) Perform E.C.U. input/output signal inspection test.
2) If N.G., recheck the E.C.U. pin terminals for damage or the connection of E.C.U. harness connector.

O.K. ↓

INSPECTION END

Diagnostic Procedure 32

FUEL TEMPERATURE SENSOR (Code No. 42)

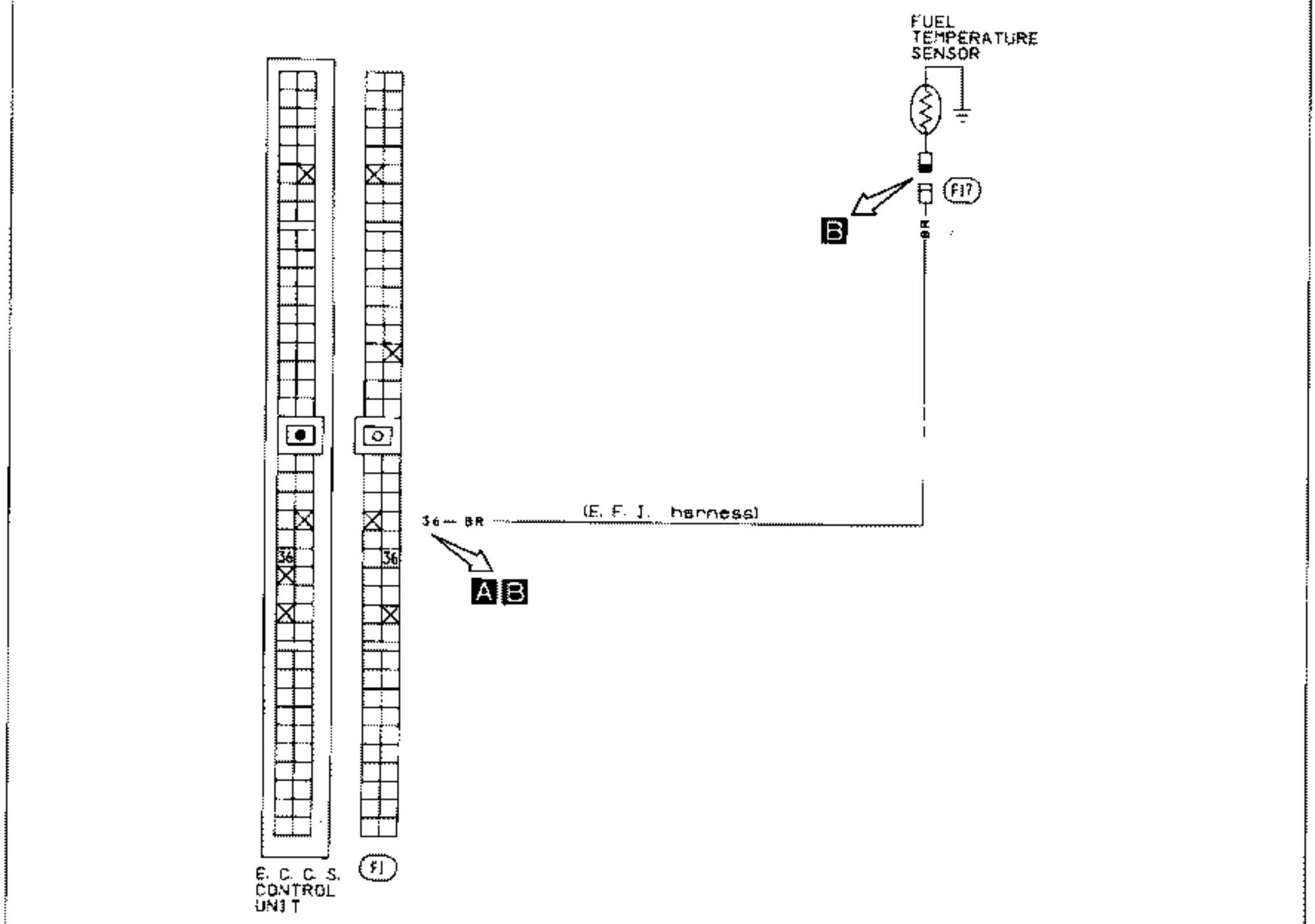

SEF362K

Harness layout

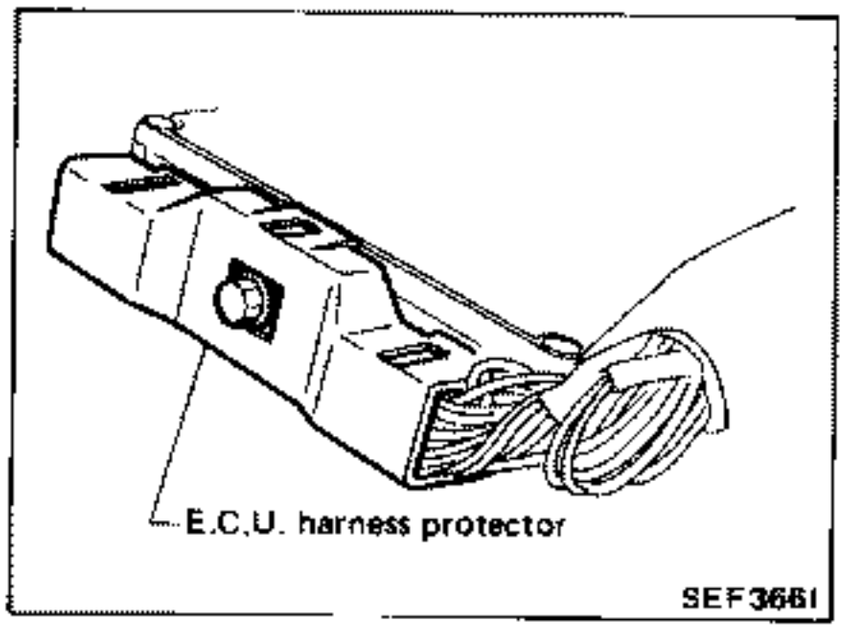

SEF366I

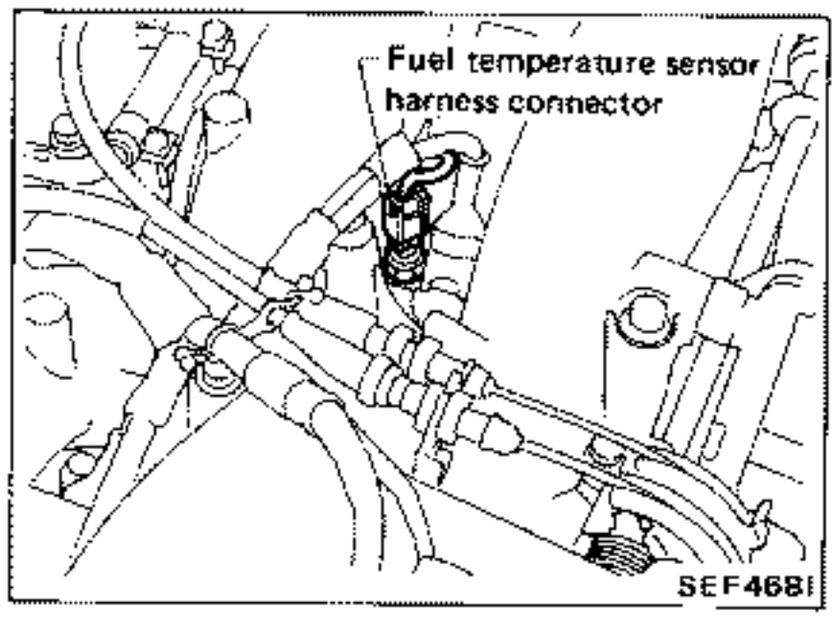

SEF468I

Diagnostic Procedure 32 (Cont'd)

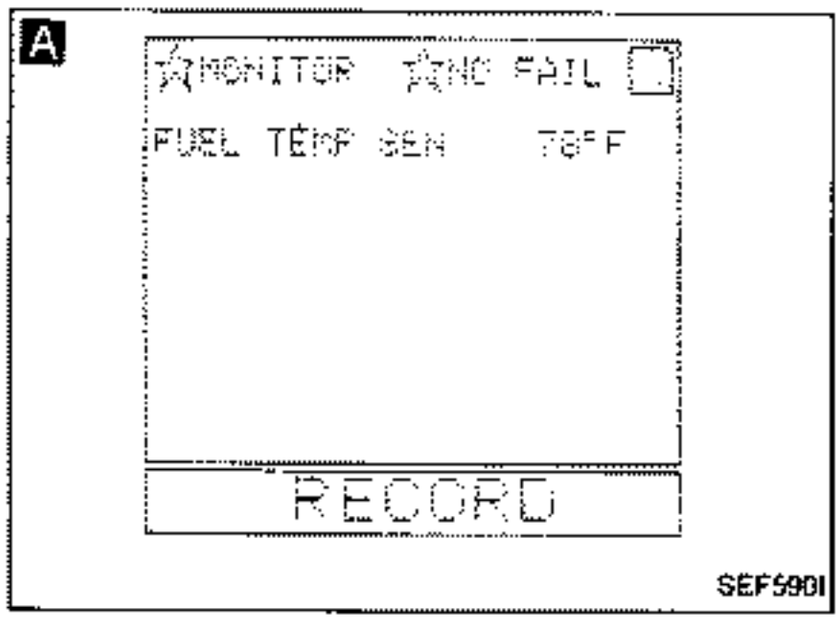

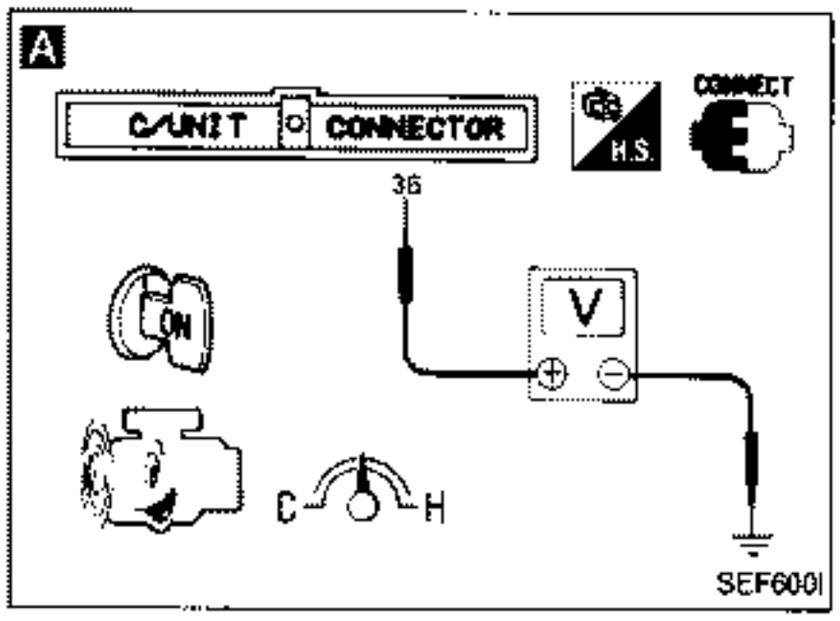

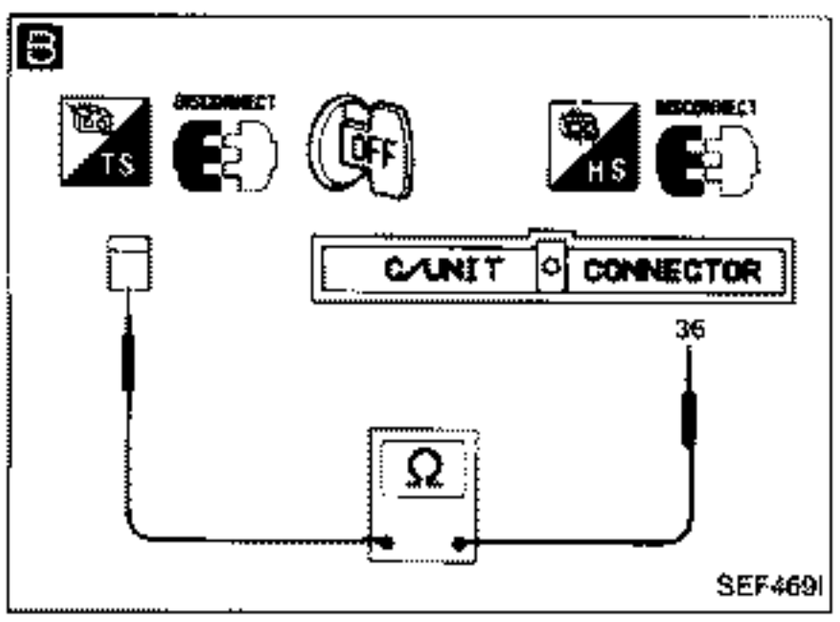

INSPECTION START

A

CHECK INPUT SIGNAL.

Read fuel temperature sensor signal in "DATA MONITOR" mode with CONSULT after engine warm-up.

Fuel temperature:
20 - 60°C (68 - 140°F)

OR

Check voltage between E.C.U. terminal ㊱ and ground after engine warm-up.

Voltage: 0 - 5.0V

N.G. →

B

CHECK HARNESS CONTINUITY BETWEEN E.C.U. AND FUEL TEMPERATURE SENSOR.

1) Stop engine.
2) Disconnect E.C.U. harness connector.
3) Disconnect exhaust gas temperature sensor harness connector.
4) Check continuity between E.C.U. terminal ㊱ and fuel temperature terminal.
Continuity should exist.

O.K. ↓

CHECK COMPONENT
(Fuel temperature sensor).
Refer to "Electrical Components Inspection".
(See page EF & EC-184.)

O.K. ↓

Reinstall any part removed.

↓

Erase the SELF-DIAGNOSTIC RESULTS memory.

↓

Perform driving test and then perform SELF-DIAGNOSTIC RESULTS (Mode II) again.

N.G. →

1) Perform E.C.U. input/output signal inspection test.
2) If N.G., recheck the E.C.U. pin terminals for damage or the connection of E.C.U. harness connector.

O.K. ↓

INSPECTION END

Diagnostic Procedure 33

THROTTLE SENSOR (Code No. 43)

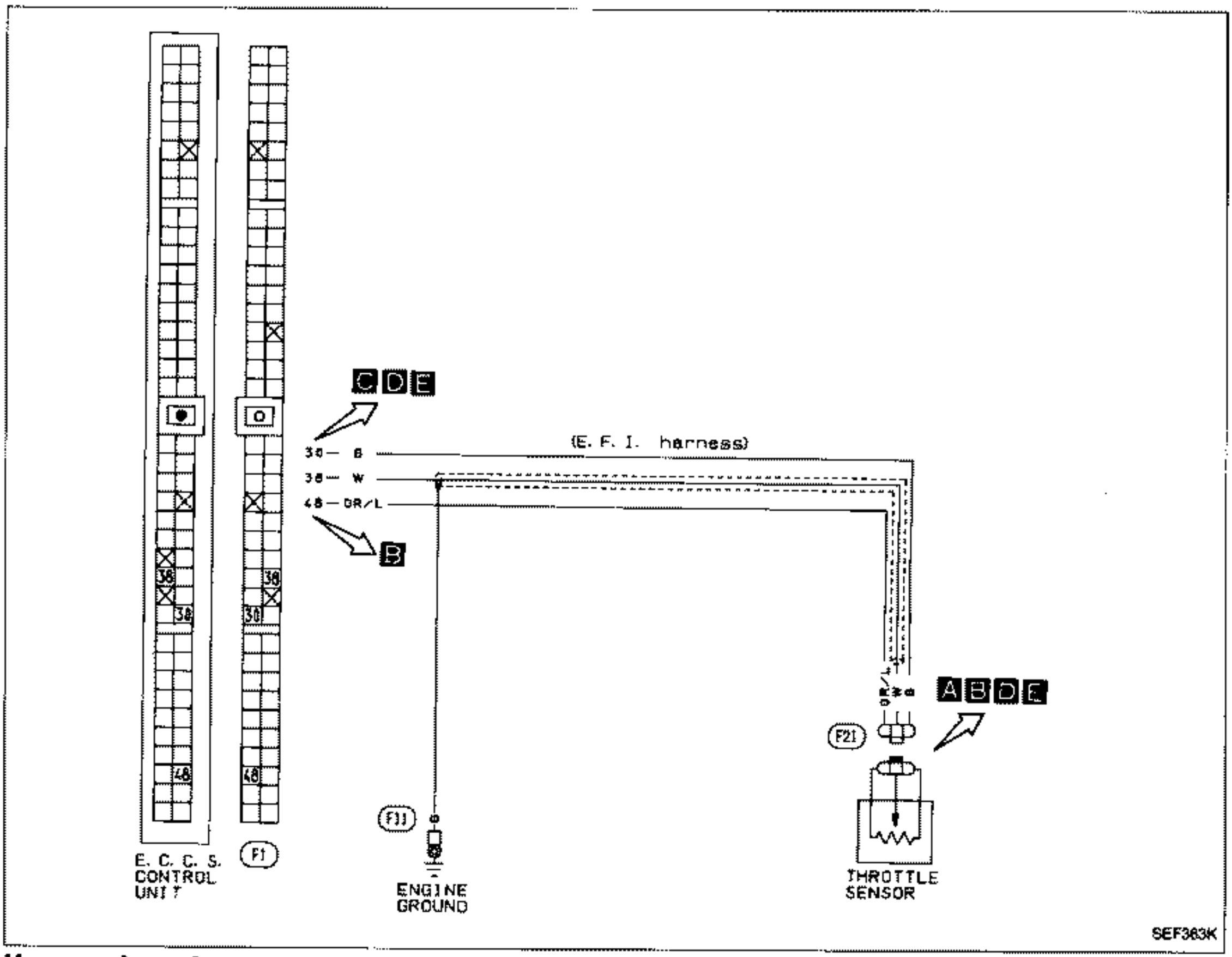

Harness layout

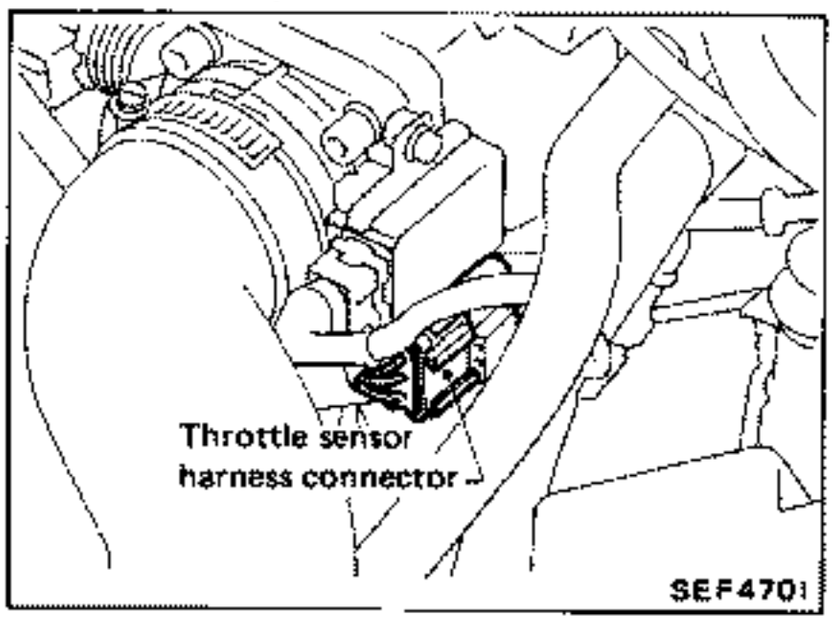

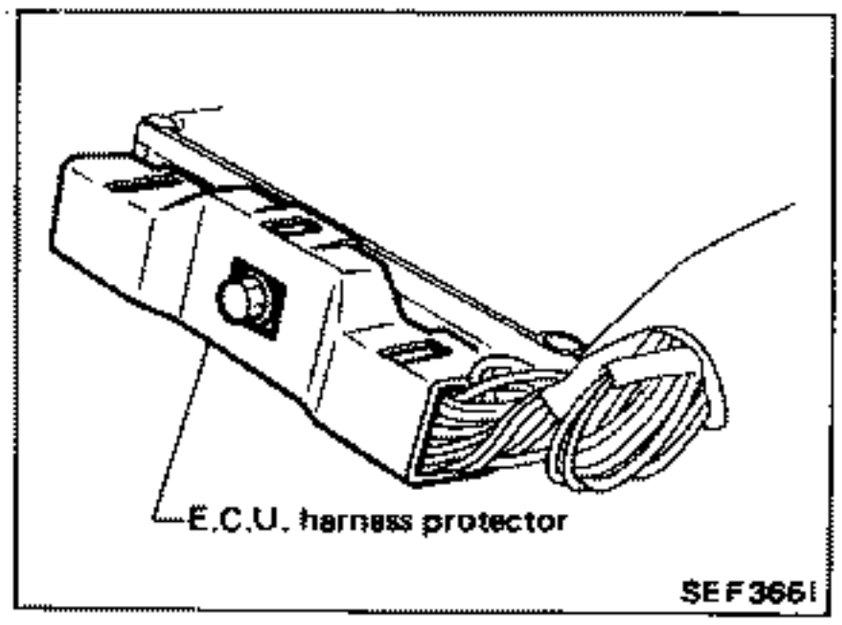

Diagnostic Procedure 33 (Cont'd)

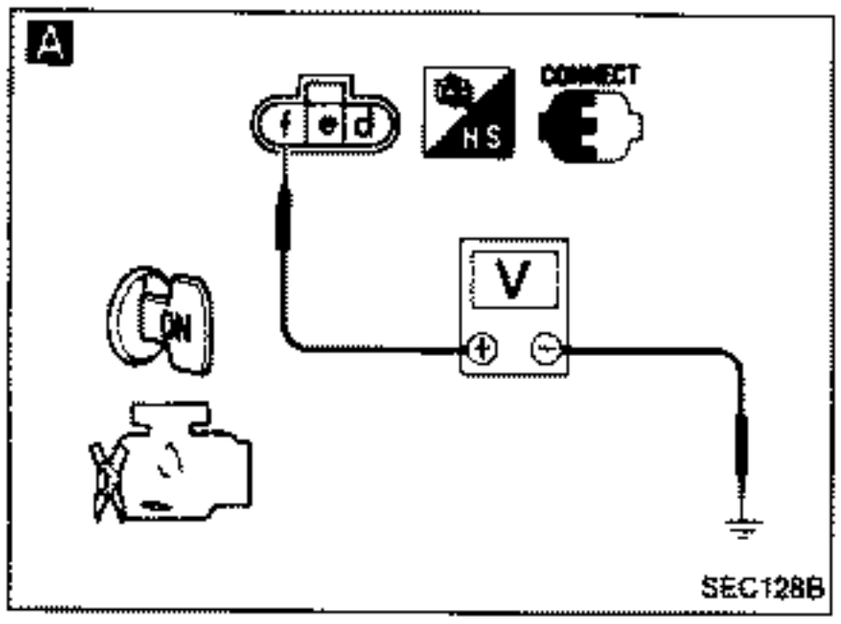

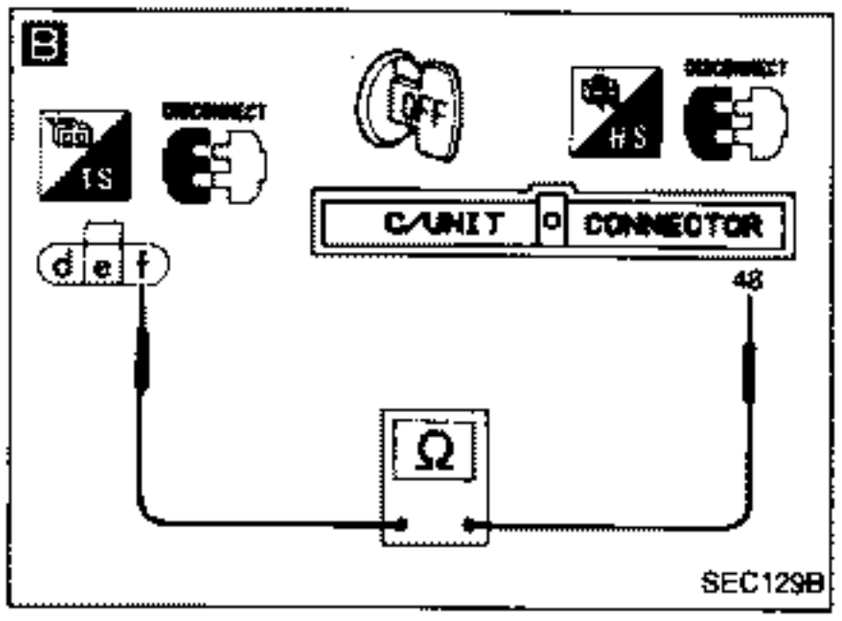

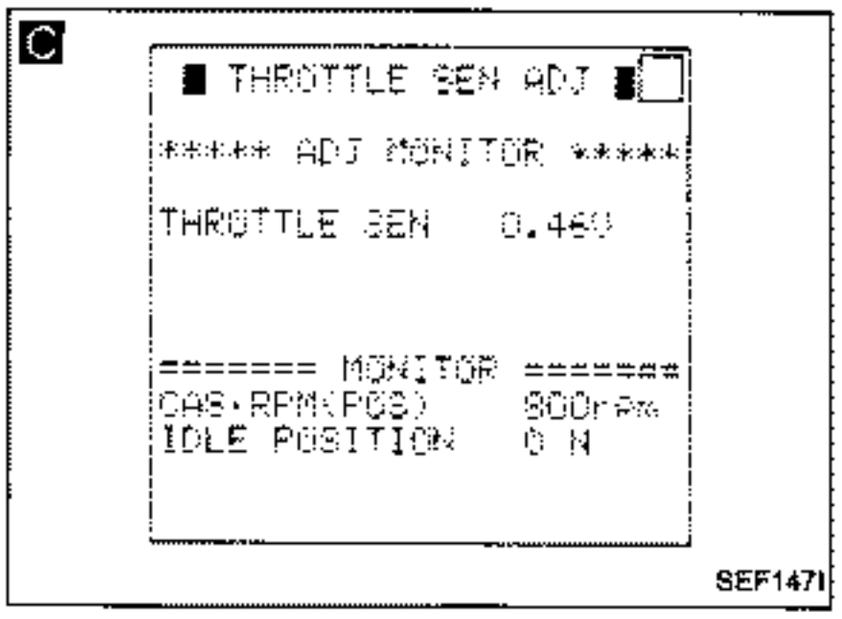

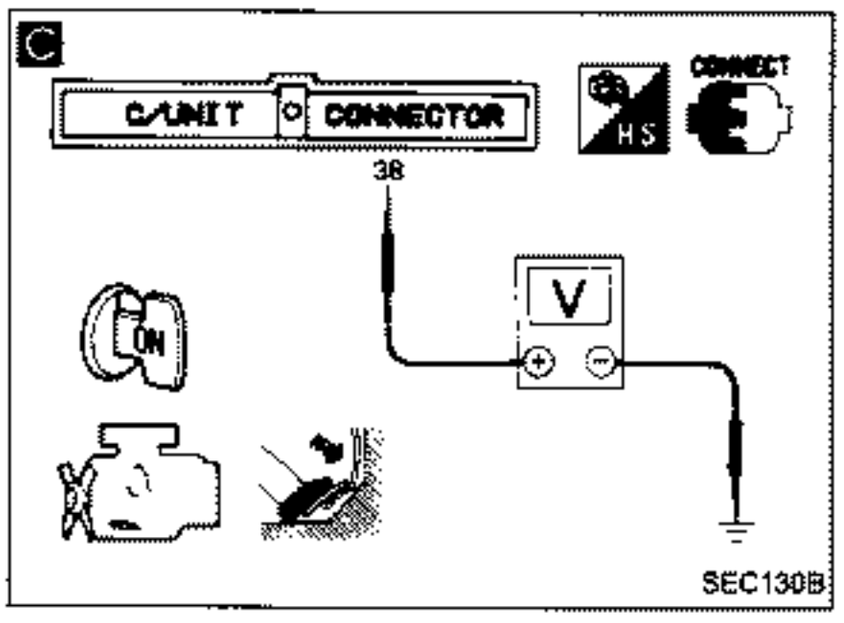

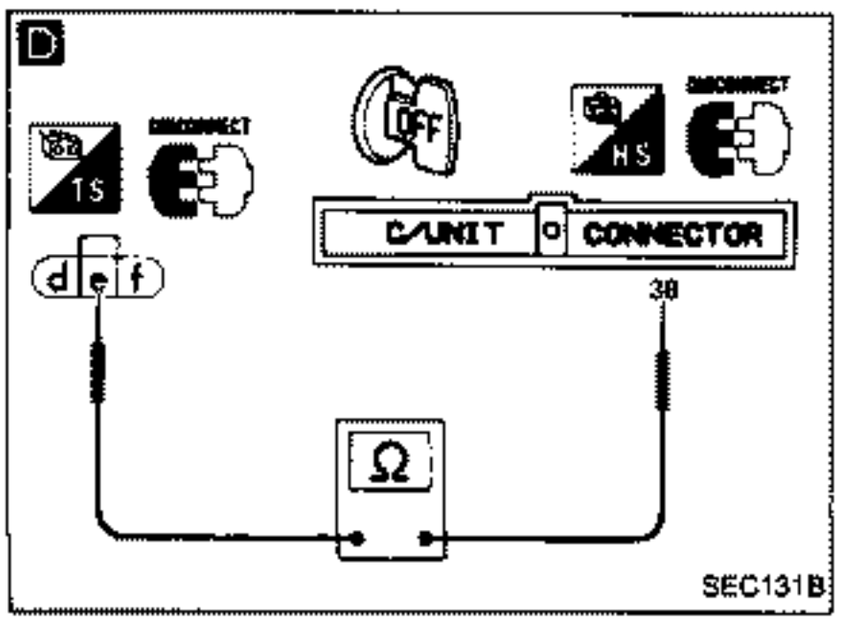

INSPECTION START

A

CHECK POWER SOURCE.
1) Turn ignition switch "ON".
2) Check voltage between terminal (f) and ground.
Voltage:
Approximately 5.0V

N.G. →

B

CHECK HARNESS CONTINUITY BETWEEN THROTTLE SENSOR AND E.C.U.
1) Turn ignition switch "OFF".
2) Disconnect throttle sensor harness connector.
3) Disconnect E.C.U. harness connector.
4) Check harness continuity between E.C.U. terminal (48) and terminal (f).
Continuity should exist.
If N.G., repair harness or connectors.

O.K. ↓

C

CHECK INPUT SIGNAL.
Read throttle sensor output voltage in "WORK SUPPORT" mode with CONSULT.
Throttle valve fully closed:
0.4 - 0.5V
Throttle valve fully open:
Approx. 4.0V

OR

Make sure that voltage between E.C.U. terminal (38) and ground changes when accelerator pedal is depressed.
Voltage:
Throttle valve fully closed:
0.4 - 0.5V
Throttle valve fully open:
Approx. 4.0V

N.G. →

ADJUST THROTTLE SENSOR INITIAL POSITION.
(See page EF & EC-181.)

D

CHECK HARNESS CONTINUITY BETWEEN THROTTLE SENSOR AND E.C.U.
1) Turn ignition switch "OFF".
2) Disconnect throttle sensor harness connector.
3) Disconnect E.C.U. harness connector.
4) Check harness continuity between E.C.U. terminal (38) and terminal (e).
Continuity should exist.
If N.G., repair harness or connectors.

O.K. ↓

CHECK COMPONENT
(Throttle sensor).
Refer to "Electrical Components Inspection".
(See page EF & EC-181.)

O.K. ↓

Diagnostic Procedure 33 (Cont'd)

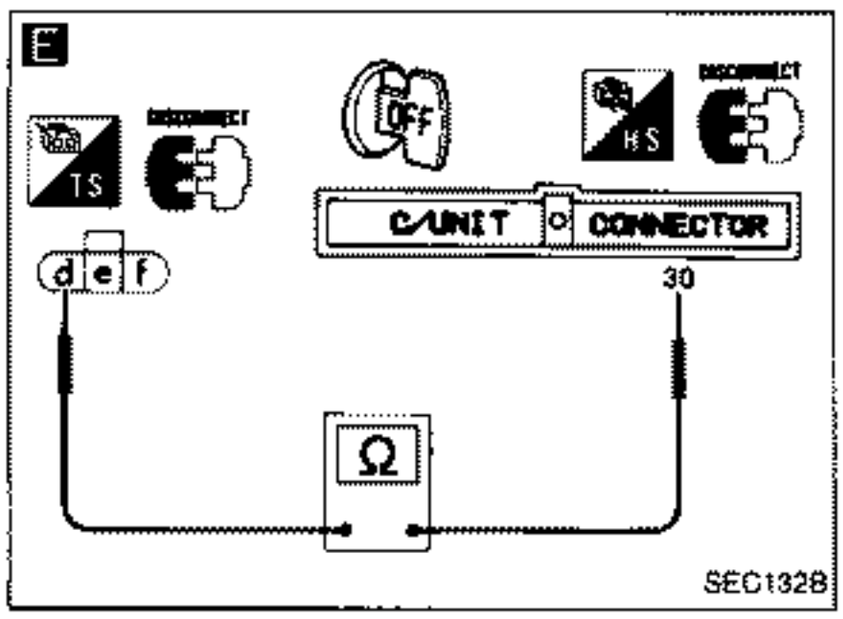

E

CHECK GROUND CIRCUIT.
1) Turn ignition switch "OFF".
2) Disconnect E.C.U. harness connector.
3) Disconnect throttle sensor harness connector.
4) Check resistance between E.C.U. terminal ㉚ and terminal ⓓ.
Continuity should exist.

N.G. → 1)Check harness continuity between throttle sensor and ground.
2) E.C.U. ground circuit.

O.K. ↓

Reinstall any part removed. ↓

Erase the SELF-DIAGNOSTIC RESULTS memory. ↓

Perform driving test and then perform SELF-DIAGNOSTIC RESULTS (Mode II) again.

N.G. → 1) Perform E.C.U. input/output signal inspection test.
2) If N.G., recheck the E.C.U. pin terminals damage or the connection of E.C.U. harness connector.

O.K. ↓

INSPECTION END

NOTE

Diagnostic Procedure 34

INJECTOR CIRCUIT

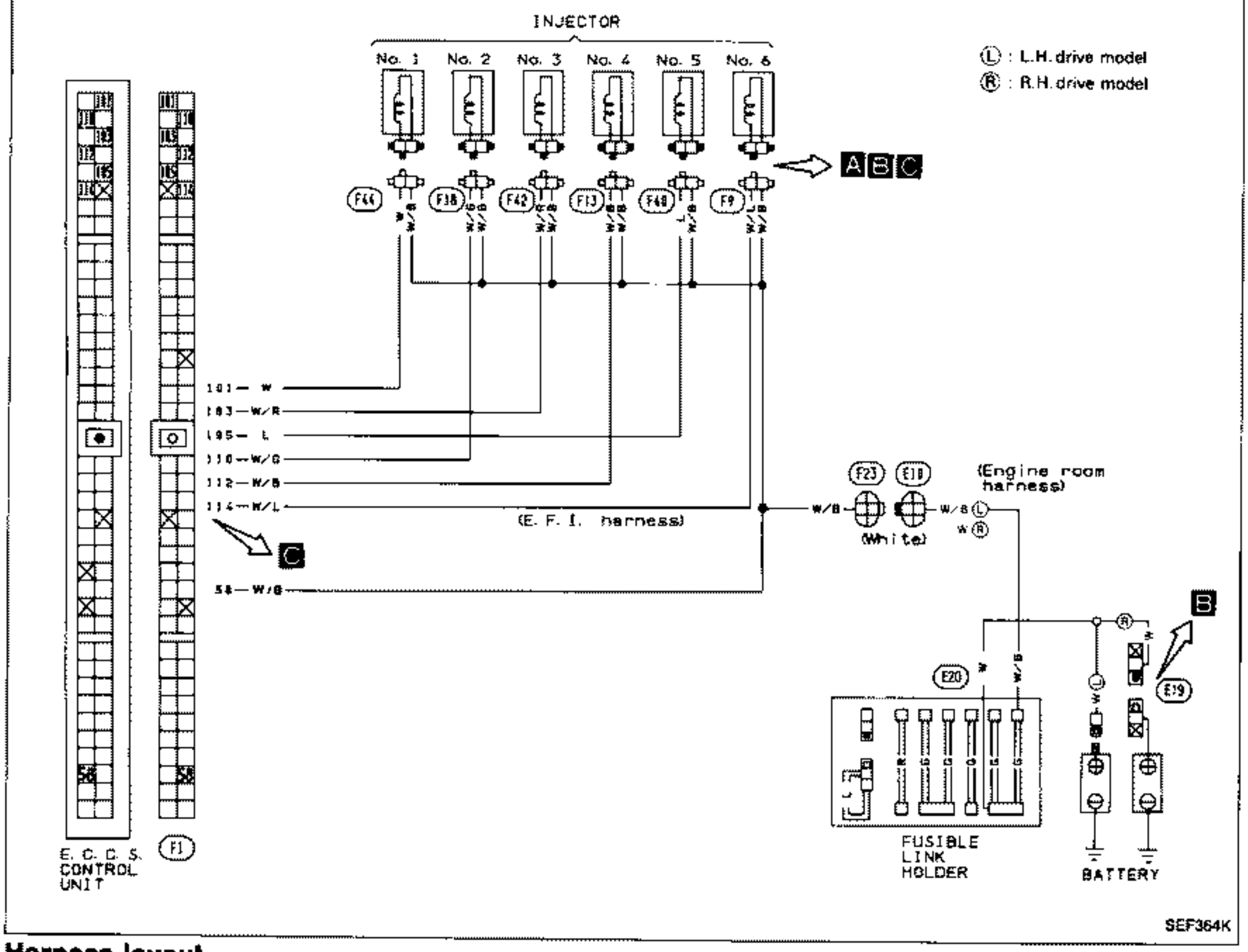

SEF364K

Harness layout

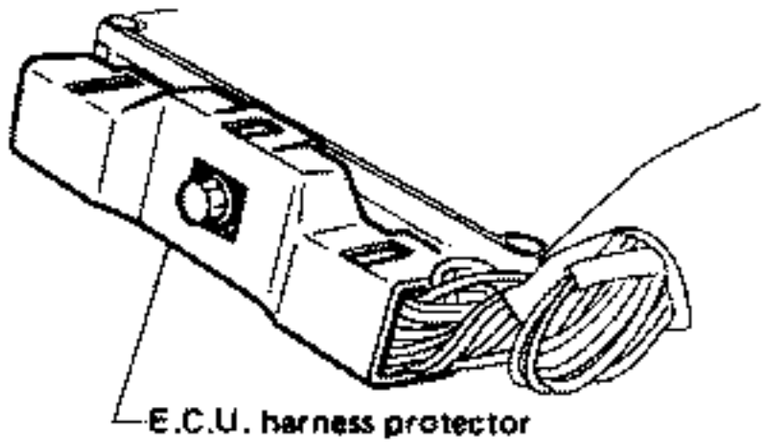

SEF366I

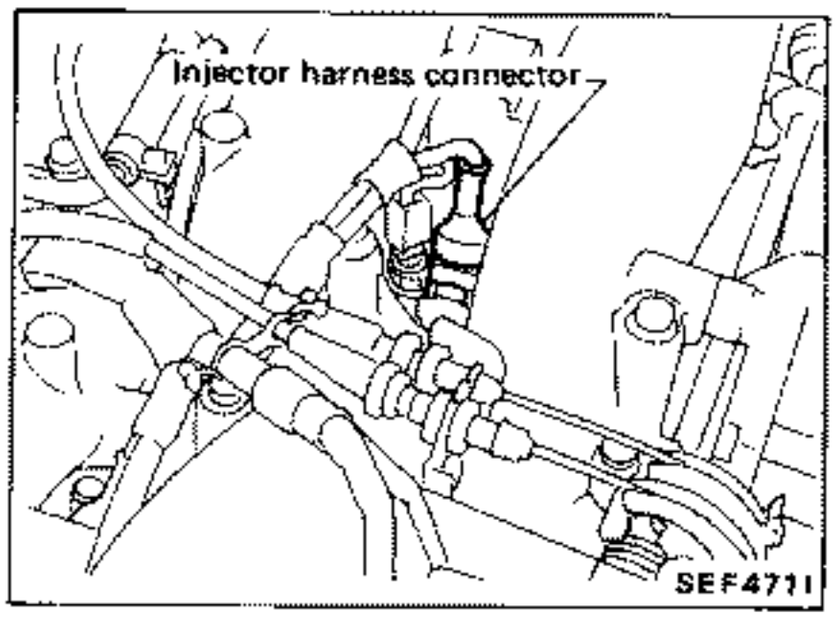

SEF471I

Diagnostic Procedure 34 (Cont'd)

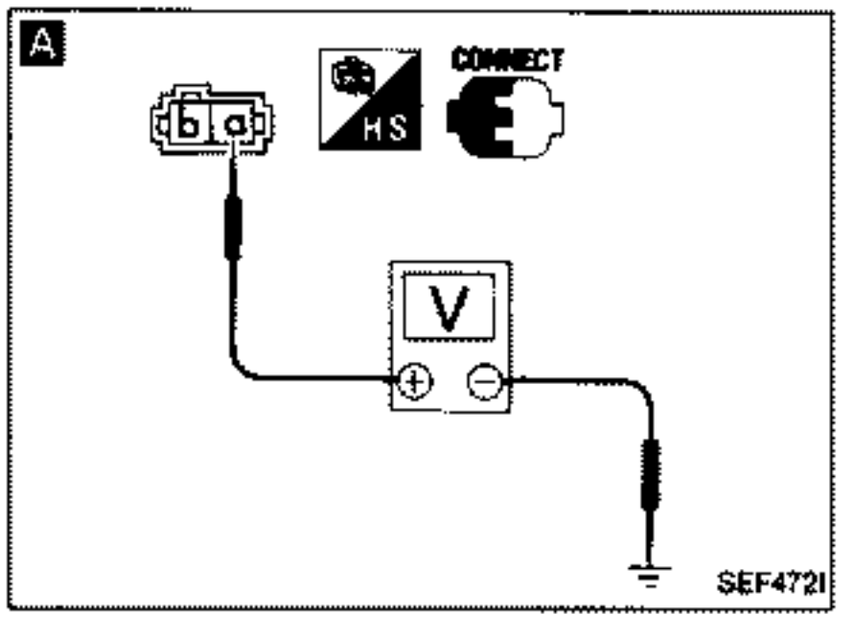

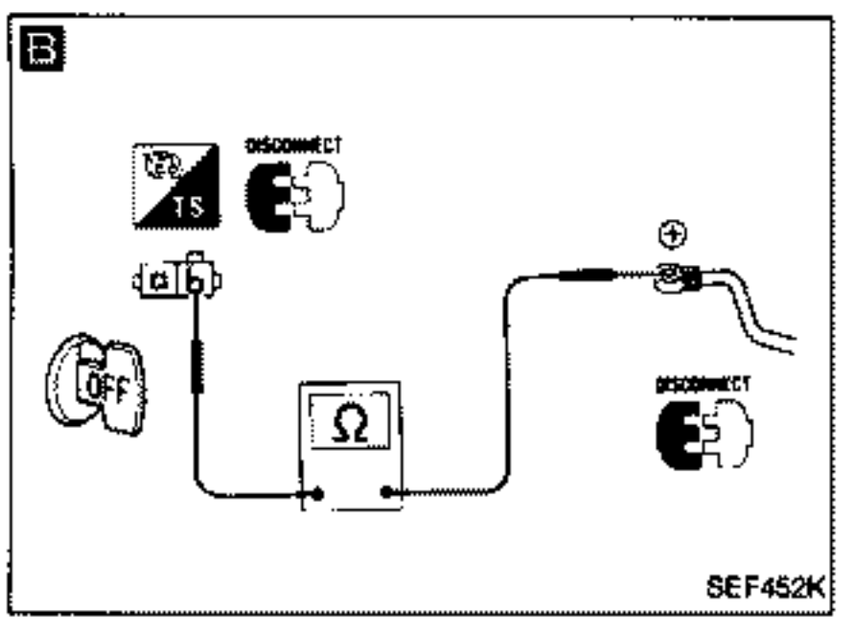

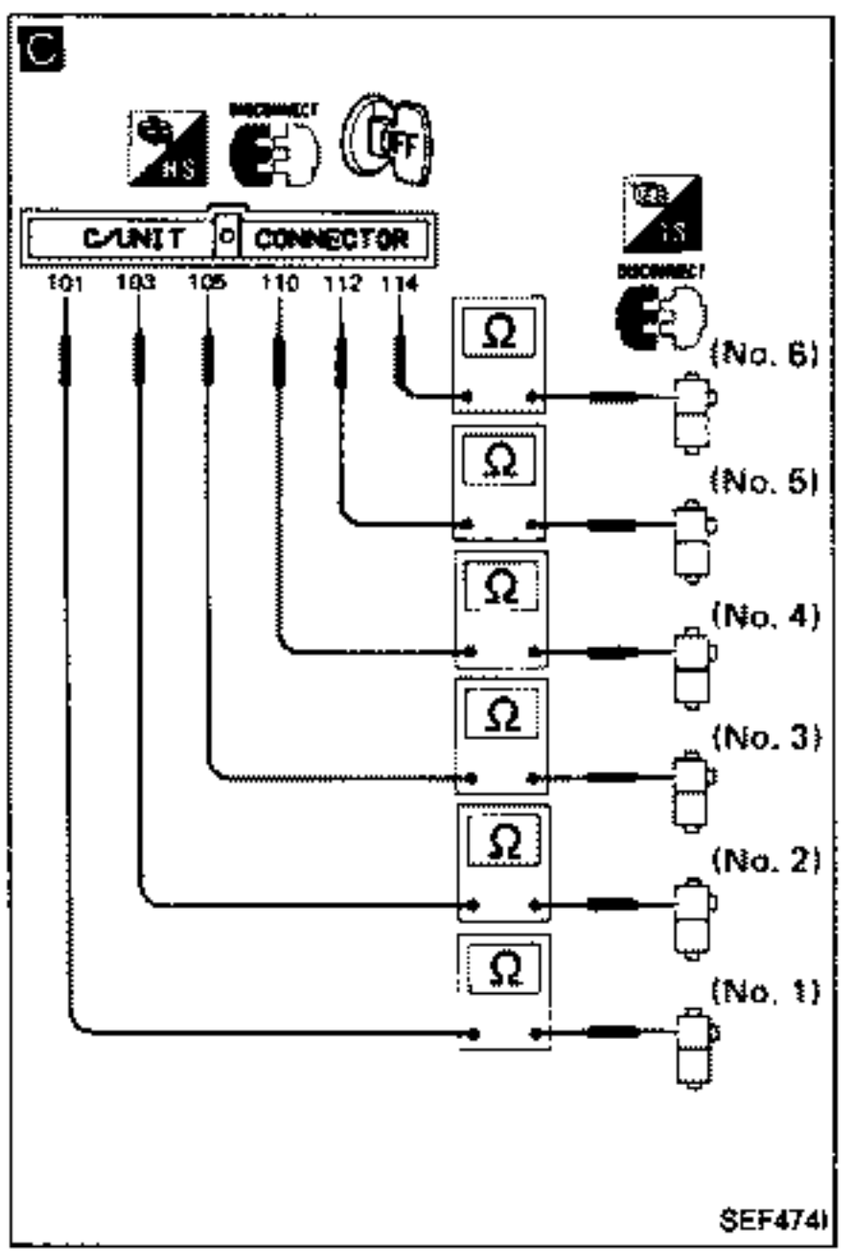

INSPECTION START

A

CHECK POWER SUPPLY.
Check voltage between terminal ⓐ and ground.
Voltage: Battery voltage

N.G. → **B**

CHECK HARNESS CONTINUITY BETWEEN INJECTORS AND BATTERY.
1) Turn ignition switch "OFF".
2) Disconnect injector harness connector.
3) Disconnect battery ⊕ terminal.
4) Check harness continuity between terminal ⓐ and battery ⊕ terminal.
Continuity should exist.
5) Check "G" fusible link.
If N.G., replace harness, connector or fusible link.

O.K.

C

CHECK HARNESS CONTINUITY BETWEEN INJECTORS AND E.C.U.
1) Disconnect battery ⊕ terminal.
2) Disconnect injector harness connectors and E.C.U. harness connector.
3) Check harness continuity, following figure **C**.
Continuity should exist.

N.G. → Repair harness or connectors.

O.K.

CHECK COMPONENT (Injector).
Refer to "Electrical Components Inspection".
(See page EF & EC-183.)

N.G. → Repair or replace injector.

O.K.

Reinstall any part removed.

Perform driving test again.

N.G. →
1) Perform E.C.U. input/output signal inspection test.
2) If N.G., recheck the E.C.U. pin terminals for damage or the connection of E.C.U. harness connector.

O.K.

INSPECTION END

Diagnostic Procedure 35

THROTTLE VALVE SWITCH (Idle position)

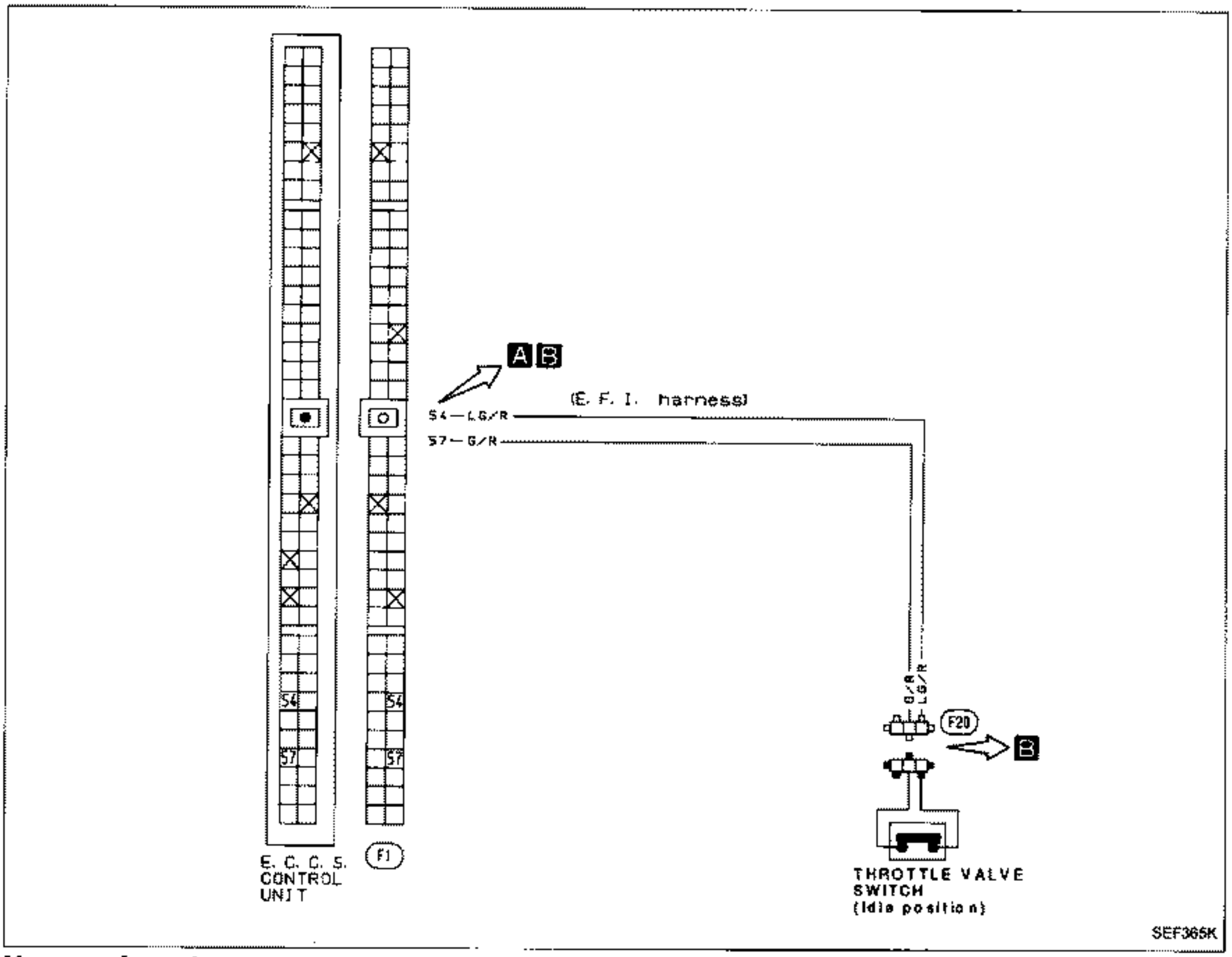

Harness layout

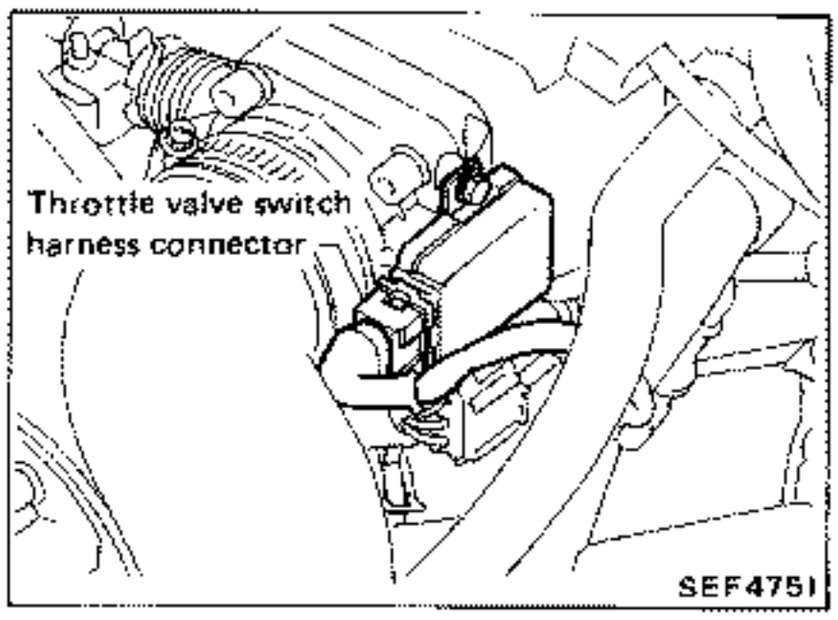

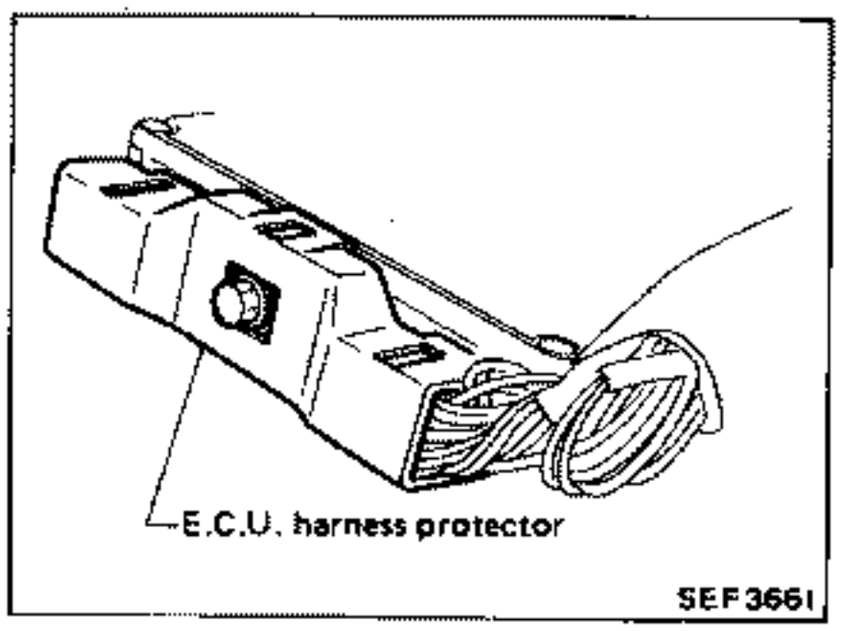

Diagnostic Procedure 35 (Cont'd)

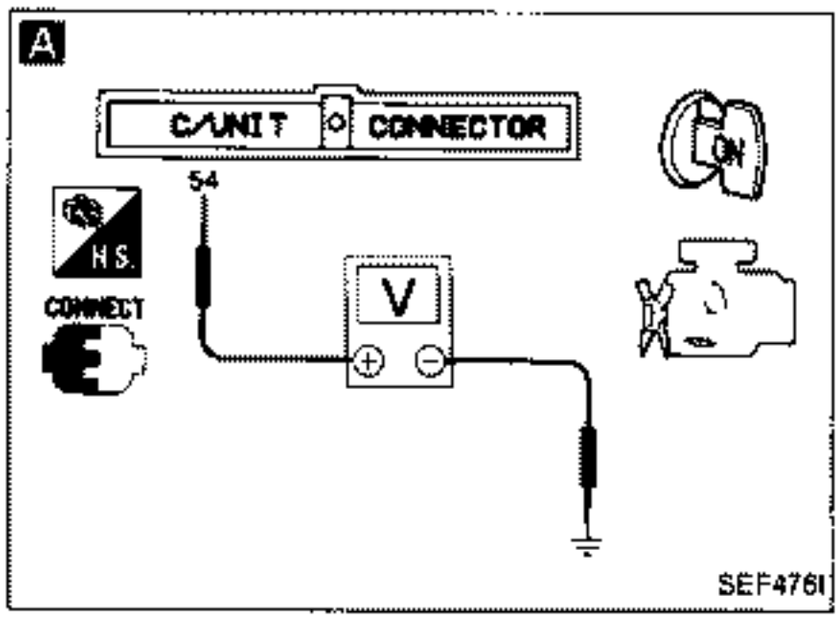

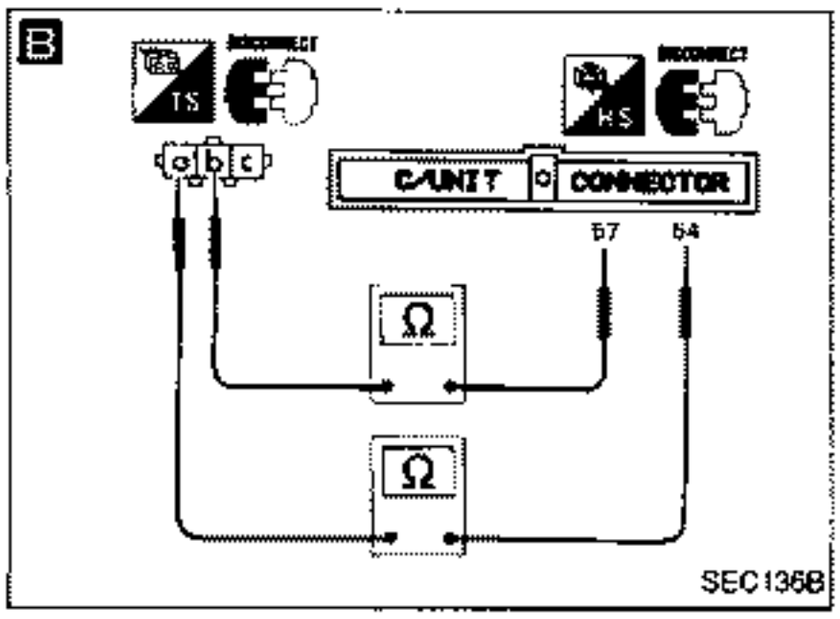

INSPECTION START

A

CHECK INPUT SIGNAL.
1) Turn ignition switch "ON".
2) Check voltage between E.C.U. terminal ⑭ and ground.
Voltage:
Throttle valve fully closed:
9.0 - 10.0V
Throttle valve fully open:
0V

N.G. → B

O.K.

INSPECTION END

B

CHECK HARNESS CONTINUITY BETWEEN E.C.U. AND THROTTLE VALVE SWITCH.
1) Turn ignition switch "OFF".
2) Disconnect throttle valve switch harness connector.
3) Disconnect E.C.U. harness connector.
4) Check harness continuity between E.C.U. terminals ⑭, ⑰ and terminals ⓐ, ⓑ.
Continuity should exist.
If N.G., repair harness or connectors.

O.K.

Check if throttle valve switch (throttle sensor body) is installed in proper position.
(See page EF & EC-181.)

O.K.

CHECK COMPONENT (throttle valve switch).
Refer to "Electrical Components Inspection".
(See page EF & EC-183.)

Diagnostic Procedure 36

START SIGNAL

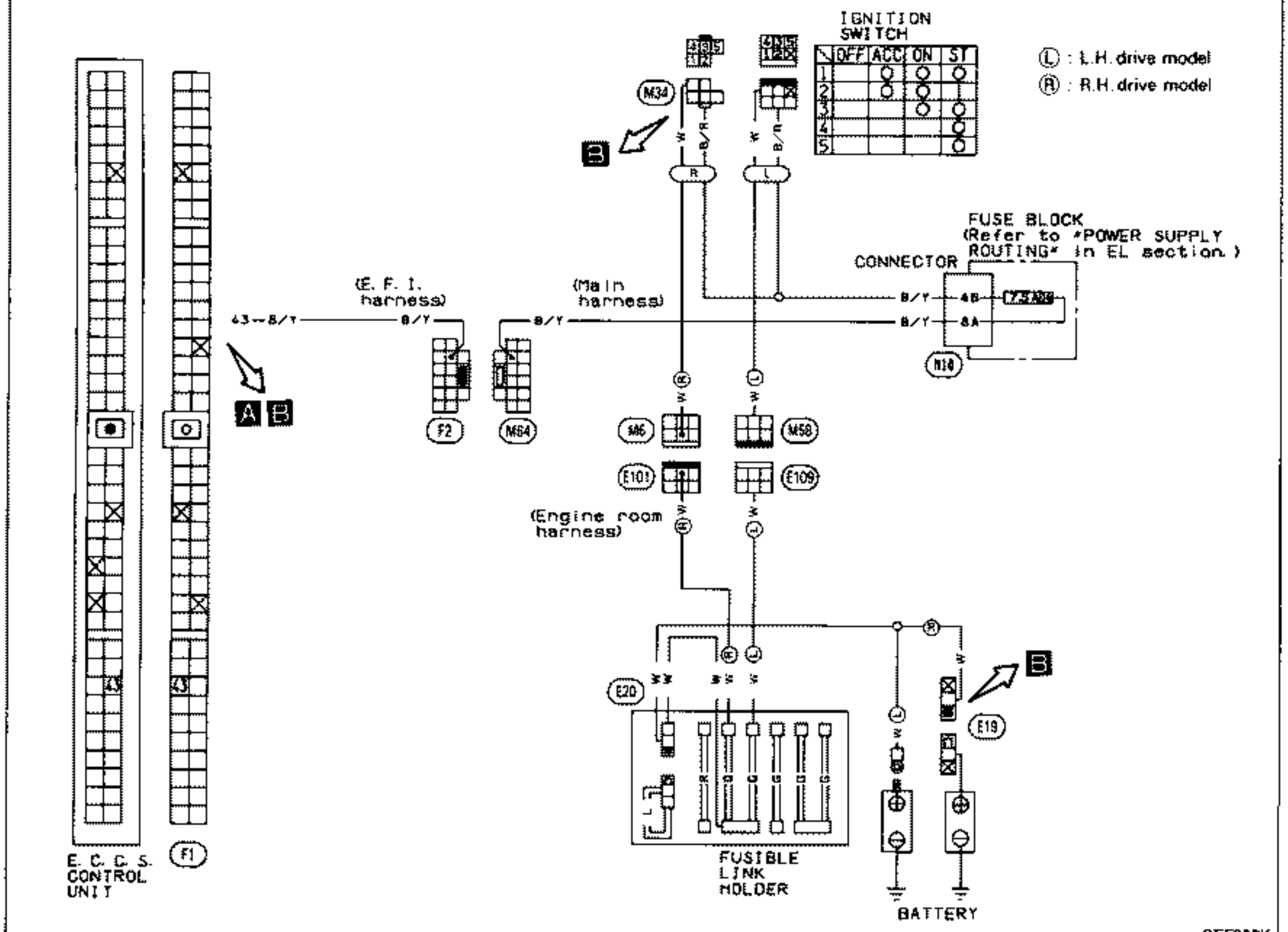

Harness layout

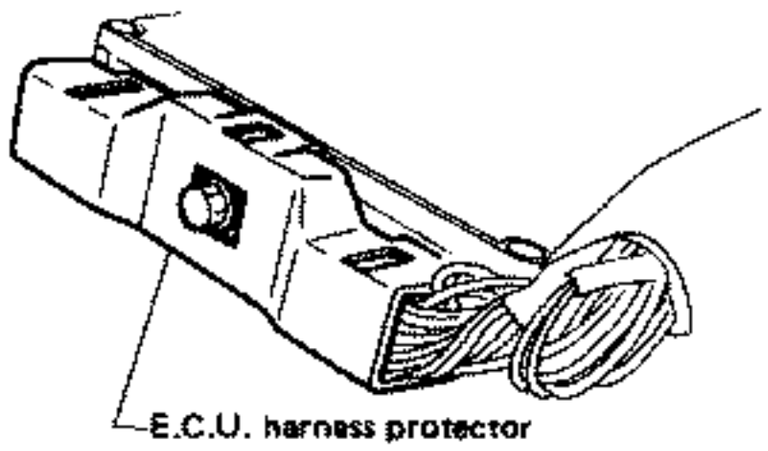

Diagnostic Procedure 36 (Cont'd)

A

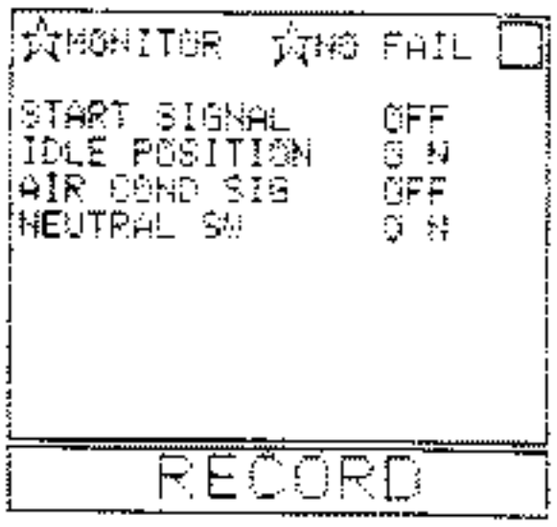

SEF149I

A

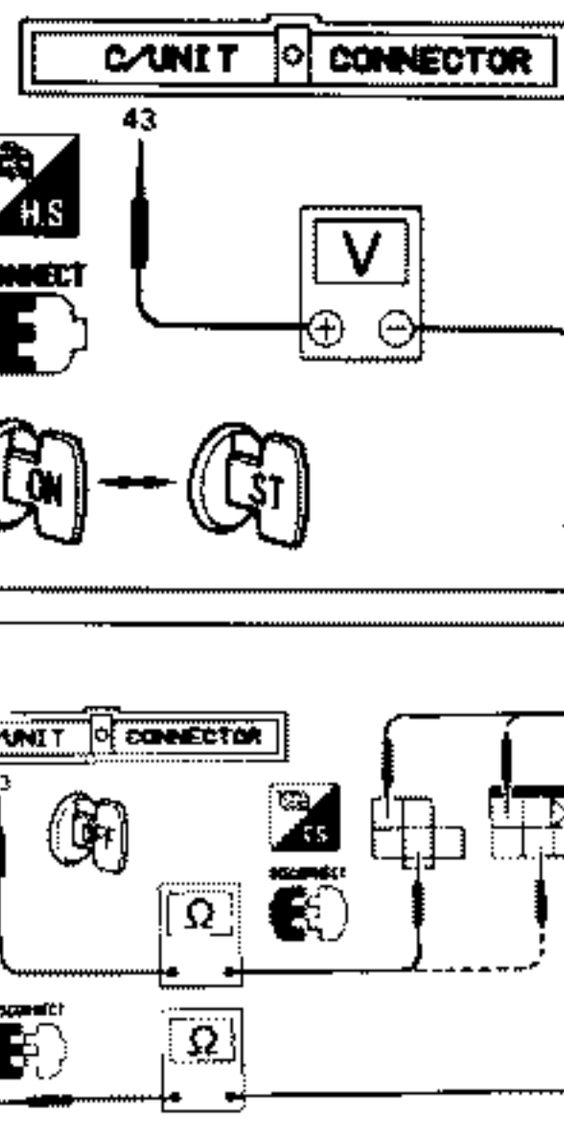

SEF477I

B

SEF453K

INSPECTION START

A

CHECK INPUT SIGNAL.

1) Turn ignition switch "ON".
2) Check start signal in "DATA MONITOR" mode with CONSULT.

IGN "ON"	OFF
IGN "START"	ON

OR

2) Check voltage between E.C.U. terminal (43) and ground.

When cranking:
Battery voltage
Except above:
0V

N.G. →

B

Check the following items.

1) "G" fusible link
2) "7.5A" fuse
3) Ignition switch
4) Harness continuity between E.C.U. and ignition switch
Continuity should exist.
5) Harness continuity between battery ⊕ terminal and ignition switch
Continuity should exist.

O.K. ↓

INSPECTION END

Diagnostic Procedure 37

POWER STEERING OIL PRESSURE SWITCH

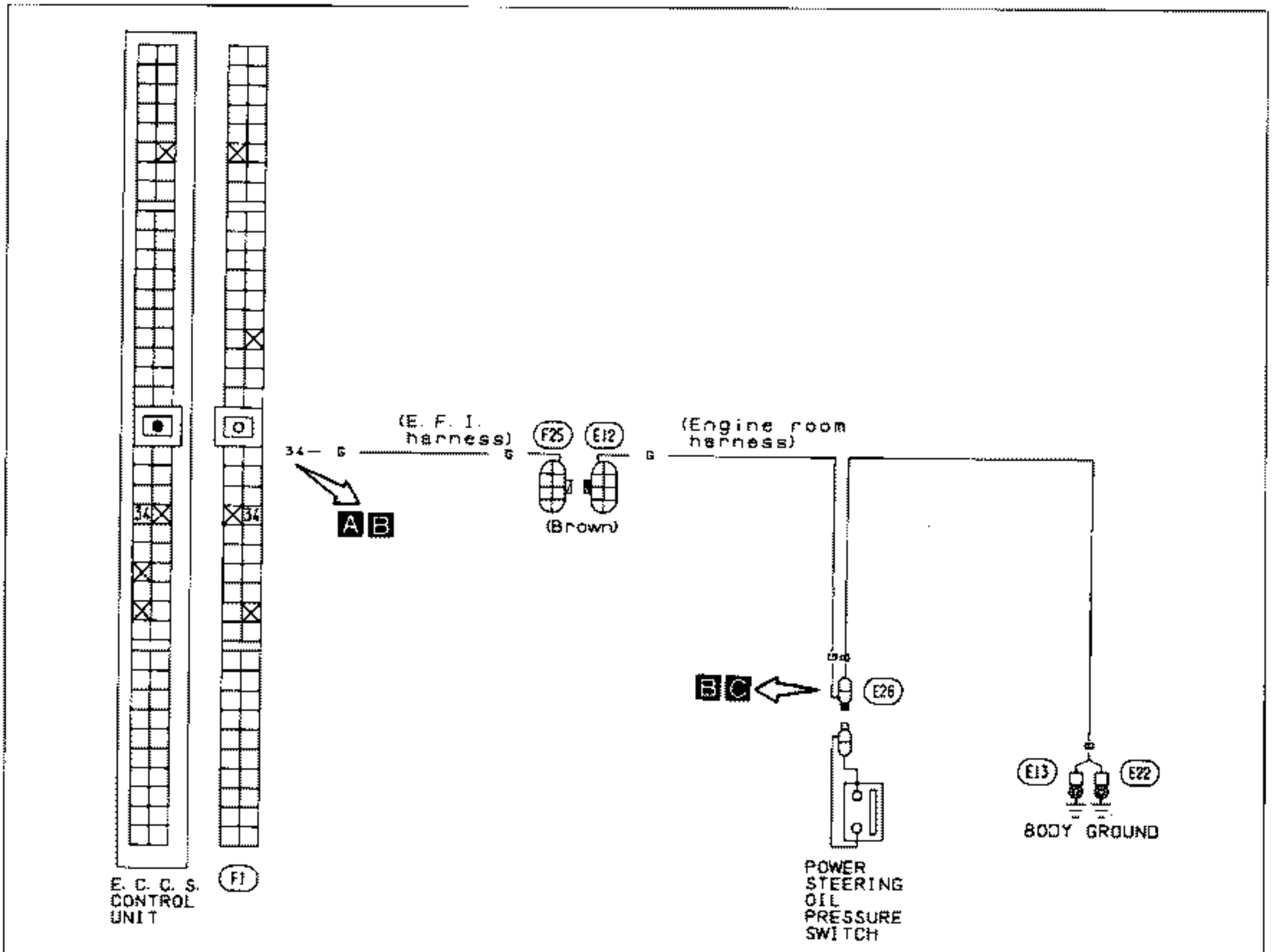

Harness layout

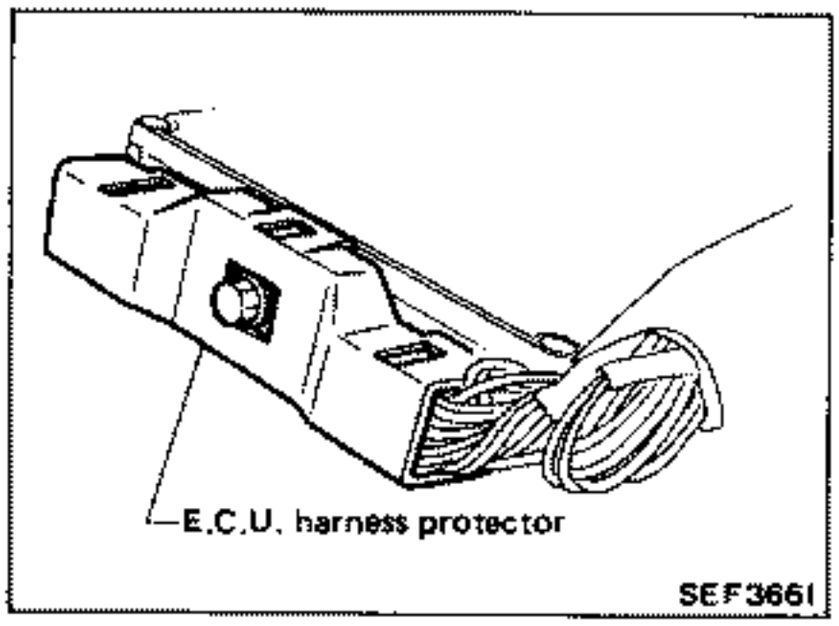

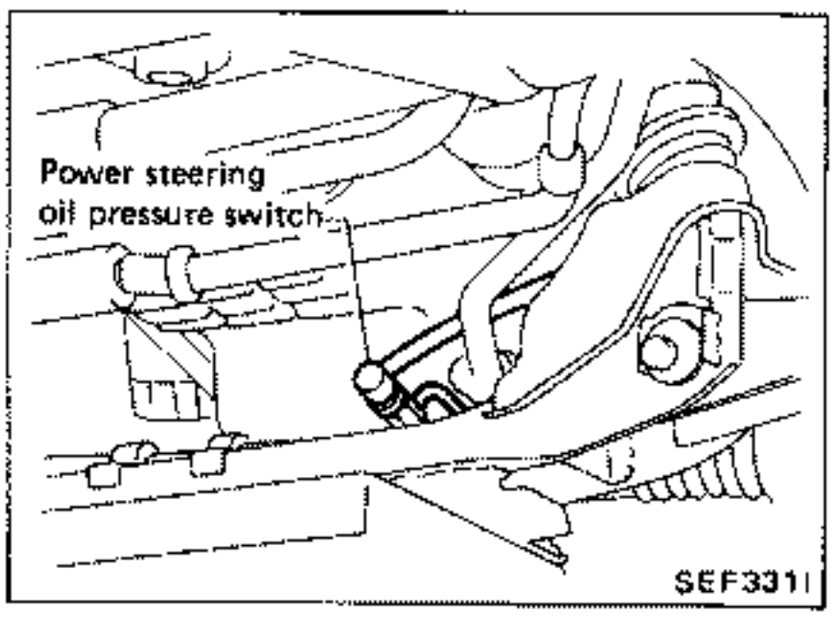

Diagnostic Procedure 37 (Cont'd)

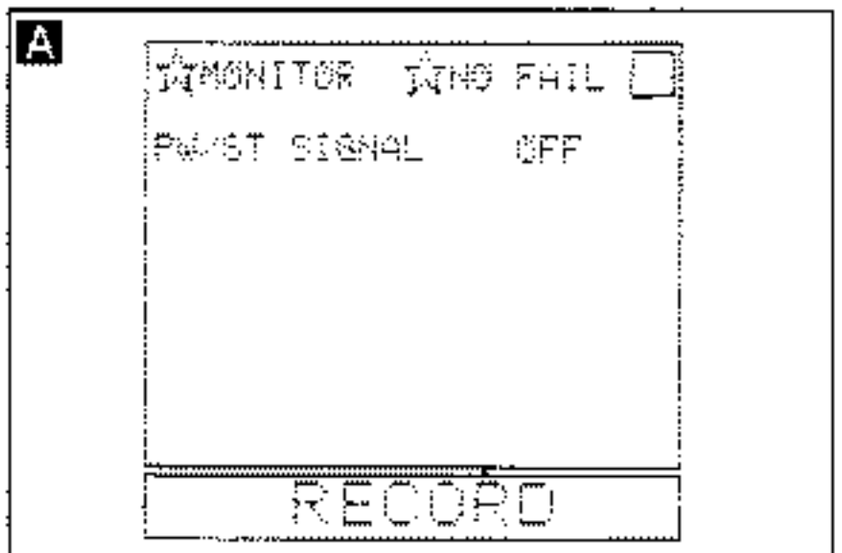

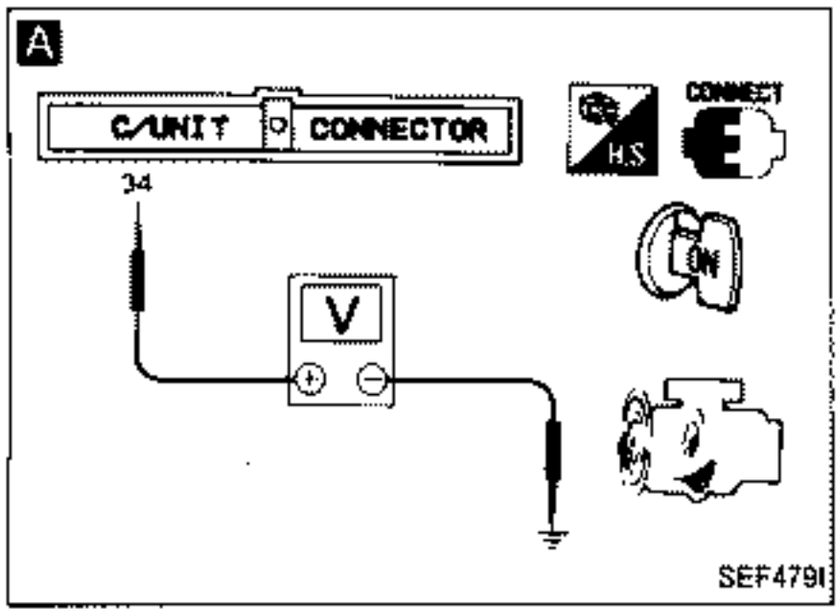

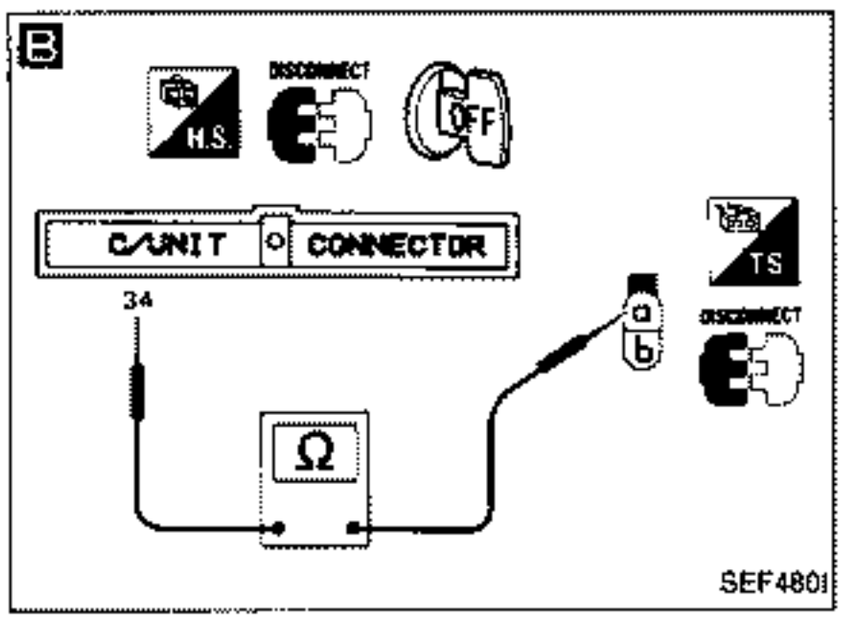

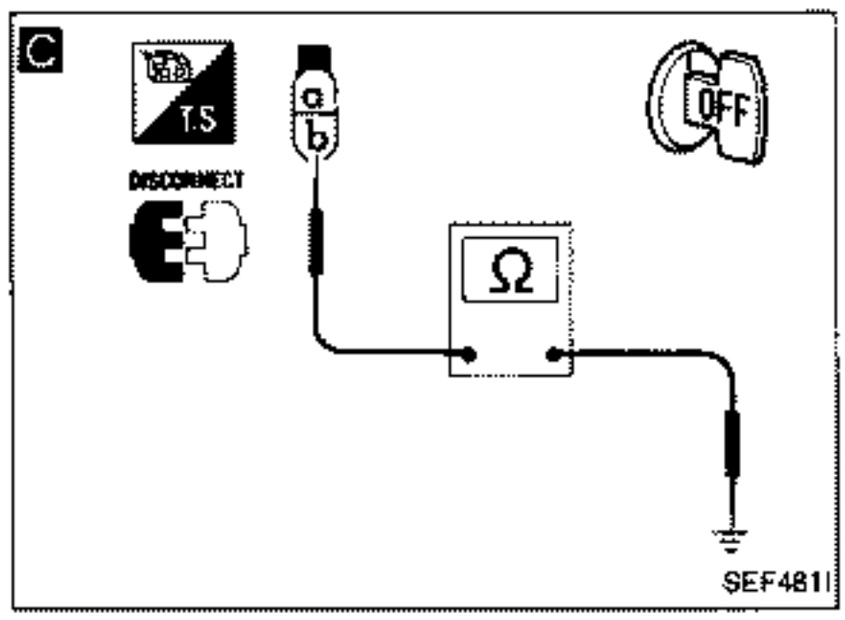

INSPECTION START

A

CHECK INPUT SIGNAL.
1) Start engine.
2) Check power steering oil pressure switch signal in "DATA MONITOR" mode with CONSULT.
Steering is neutral: OFF
Steering is turned: ON

O.K. → INSPECTION END

OR

2) Check voltage between E.C.U. terminal (34) and ground.
Steering is neutral: Approx. 8 - 9V
Steering is turned: Approx. 0V

N.G.

B

CHECK HARNESS CONTINUITY BETWEEN POWER STEERING OIL PRESSURE SWITCH AND E.C.U.
1) Turn ignition switch "OFF".
2) Disconnect E.C.U. harness connector and power steering oil pressure switch harness connector.
3) Check harness continuity between E.C.U. terminal (34) and (a).
Continuity should exist.

N.G. → Repair or replace harness or connectors.

O.K.

C

CHECK GROUND CIRCUIT.
Check harness continuity between terminal (b) and ground.
Continuity should exist.

N.G. → Repair or replace harness or connectors.

O.K.

CHECK COMPONENT.
(Power steering oil pressure switch)
Refer to "Electrical Components Inspection". (See page EF & EC-184.)

Diagnostic Procedure 38

NEUTRAL SWITCH & A/T CONTROL UNIT (NEUTRAL SIGNAL) CIRCUIT

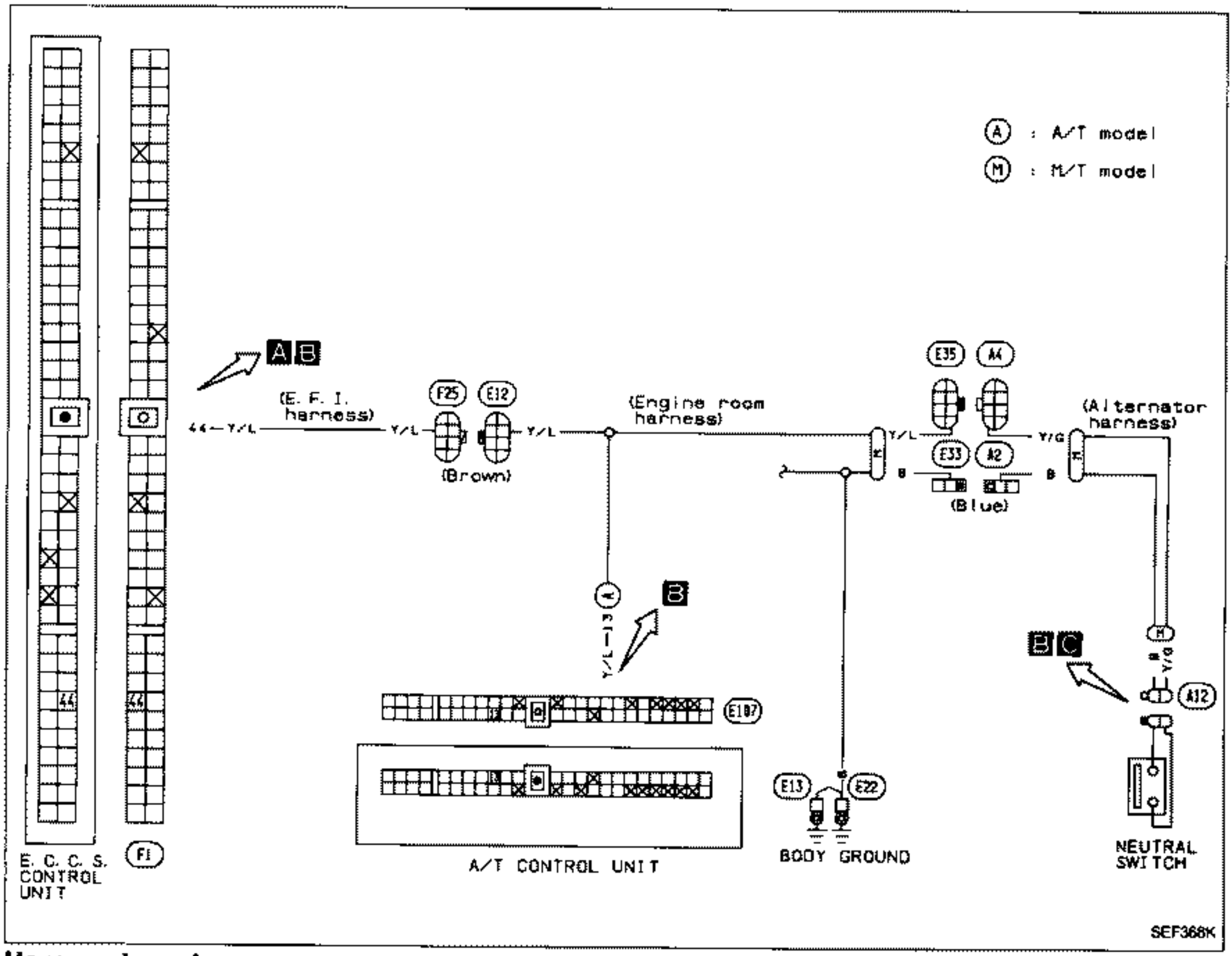

Harness layout

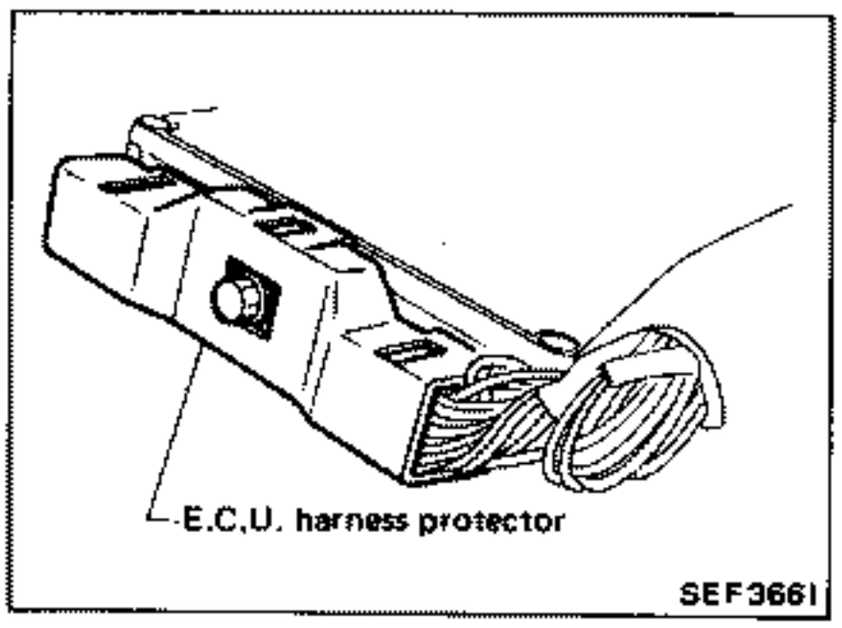

Diagnostic Procedure 38 (Cont'd)

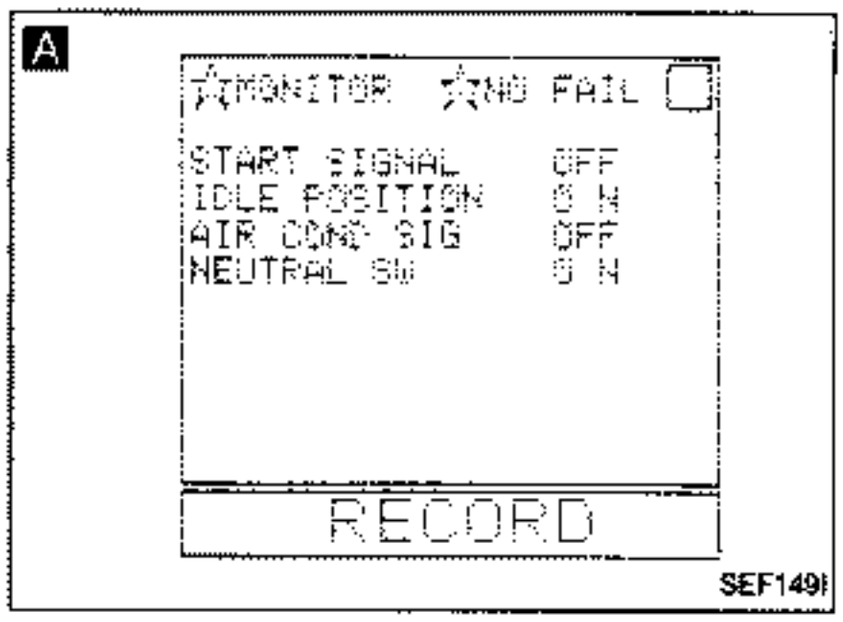

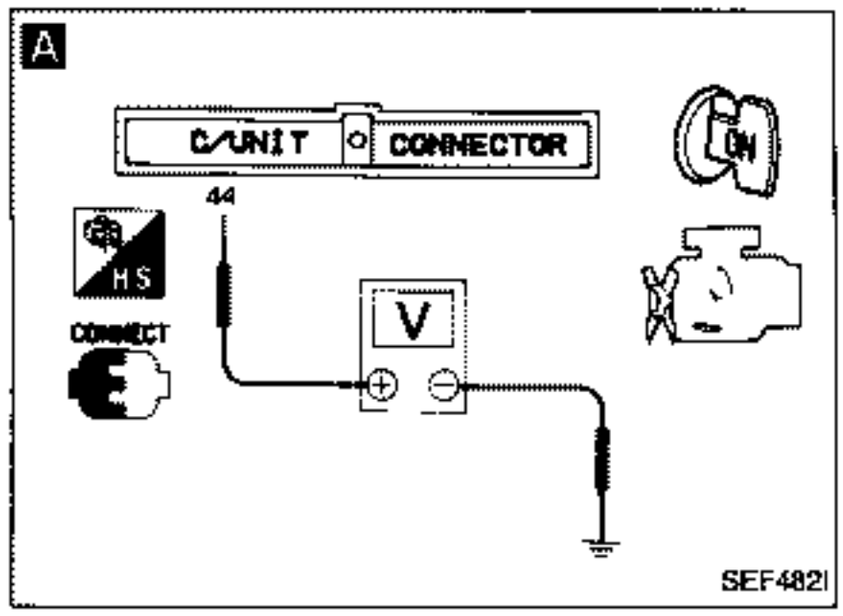

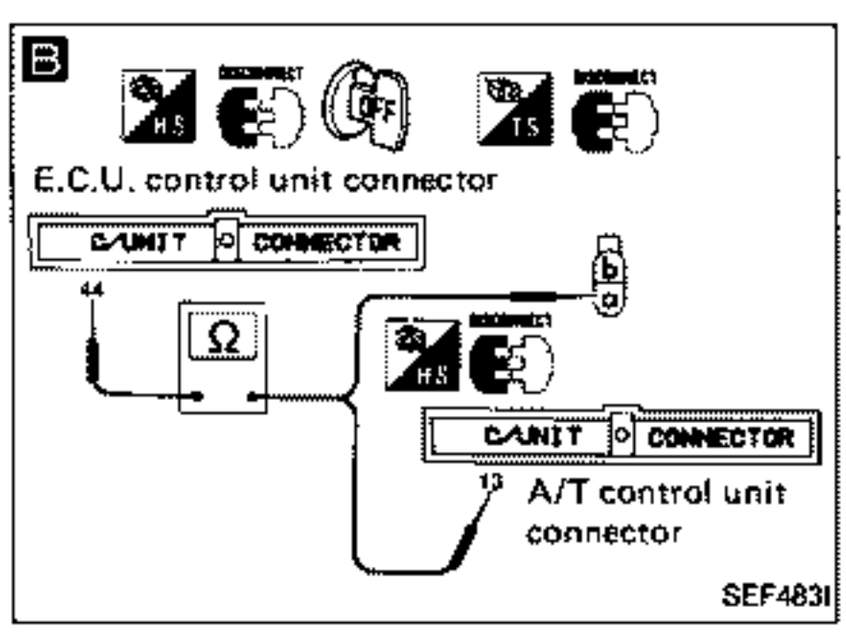

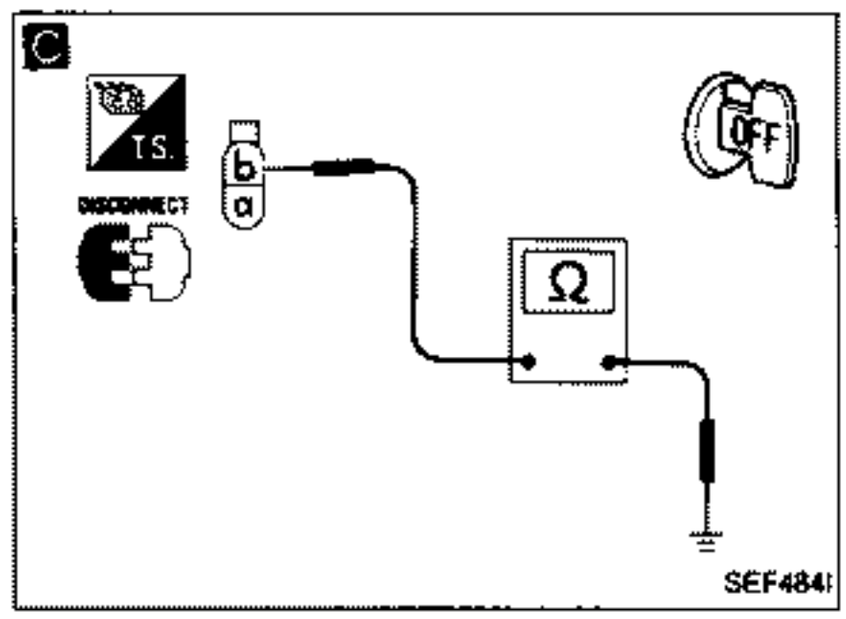

INSPECTION START

A

CHECK INPUT SIGNAL.
1) Turn ignition switch "ON".
2) Check neutral switch signal in "DATA MONITOR" mode with CONSULT.
"N" or "P": ON
Except above: OFF

OR

2) Check voltage between E.C.U. terminal (44) and ground.
"N" or "P": Approx. 0V
Except above: 8 - 9V

O.K. → INSPECTION END

N.G. ↓

B

CHECK HARNESS CONTINUITY BETWEEN E.C.U. AND NEUTRAL SWITCH (A/T CONTROL UNIT).
1) Turn the ignition switch "OFF".
2) Disconnect E.C.U. harness connector and neutral switch harness connector (A/T control unit harness connector.)
3) Check harness continuity between E.C.U. terminal (44) and (a) ((13)).
Continuity should exist.

N.G. → Repair or replace harness or connectors.

O.K. ↓

C

CHECK GROUND CIRCUIT (M/T only).
Check harness continuity between terminal (b) and ground.
Continuity should exist.

N.G. → (Repair or replace harness or connectors.)

O.K. ↓

CHECK COMPONENT.
- (Neutral switch)
  Refer to "Electrical Components Inspection".
  (See page EF & EC-183.)
- (A/T control unit)
  See A/T section.
- (Inhibitor switch)
  Refer to "Electrical Components Inspection".
  (See page EF & EC-183.)

Diagnostic Procedure 39

FUEL PUMP

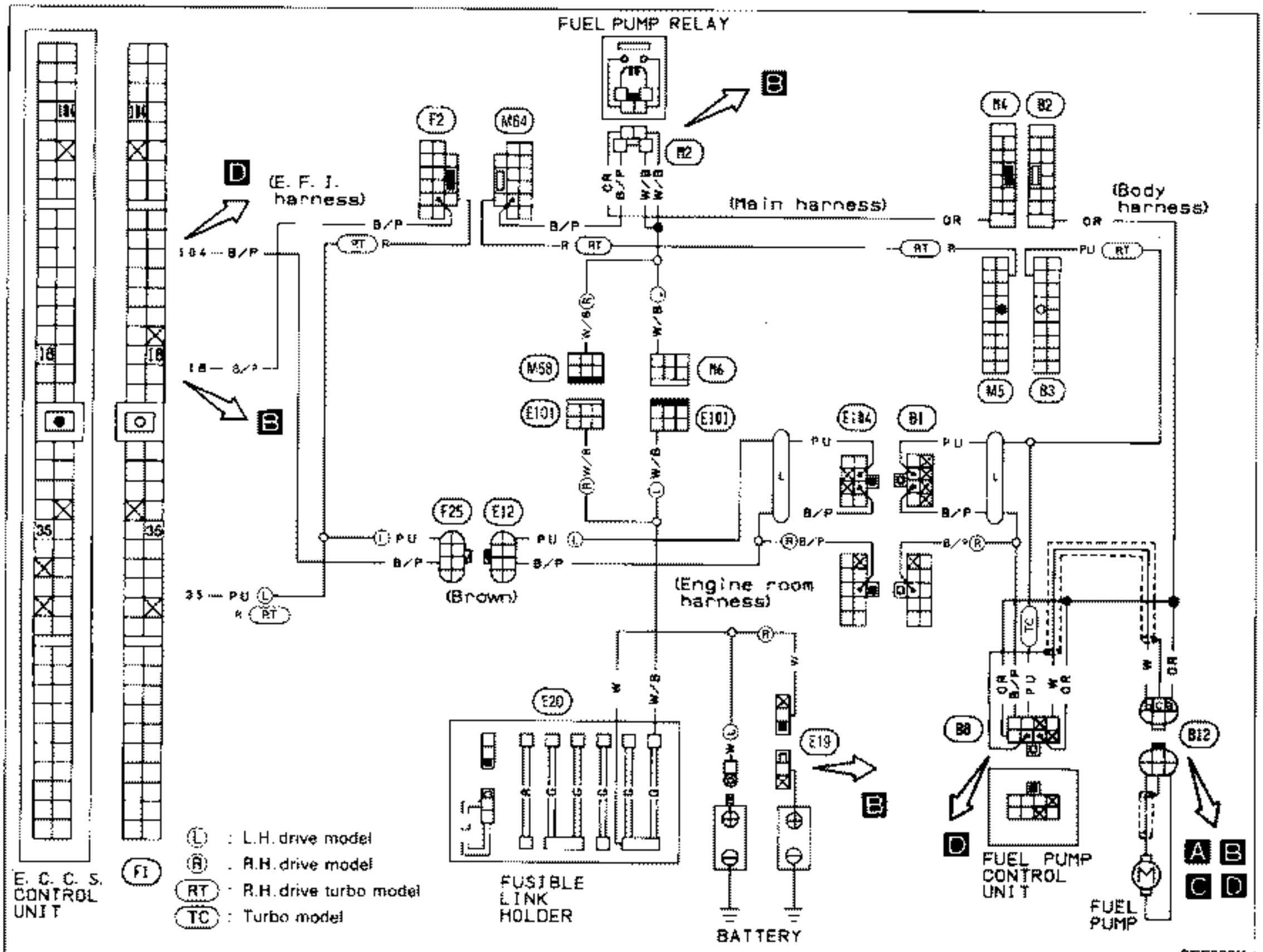

Harness layout

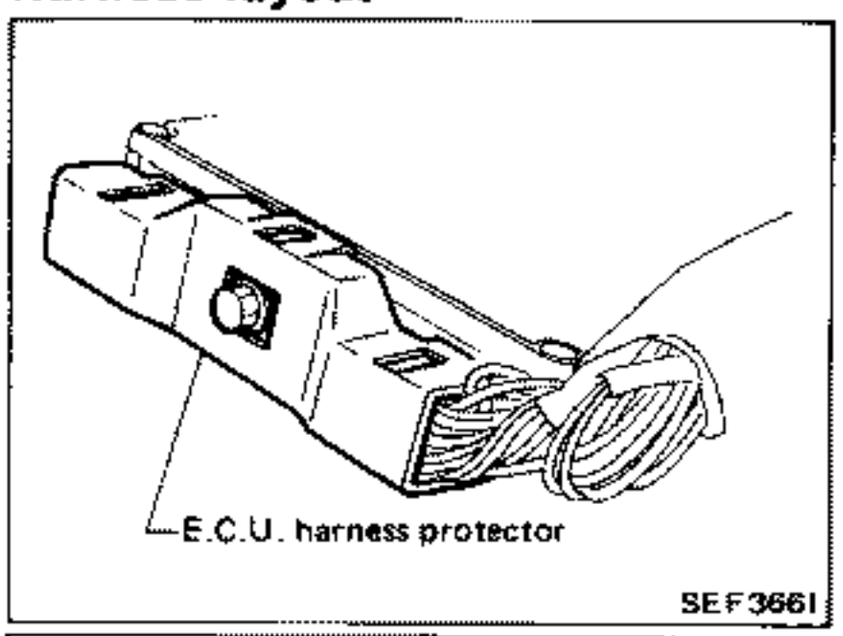

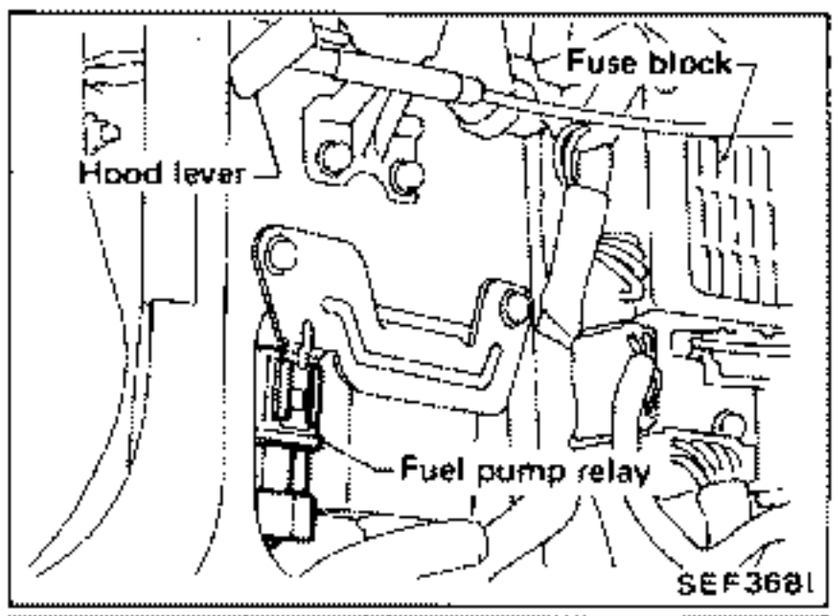

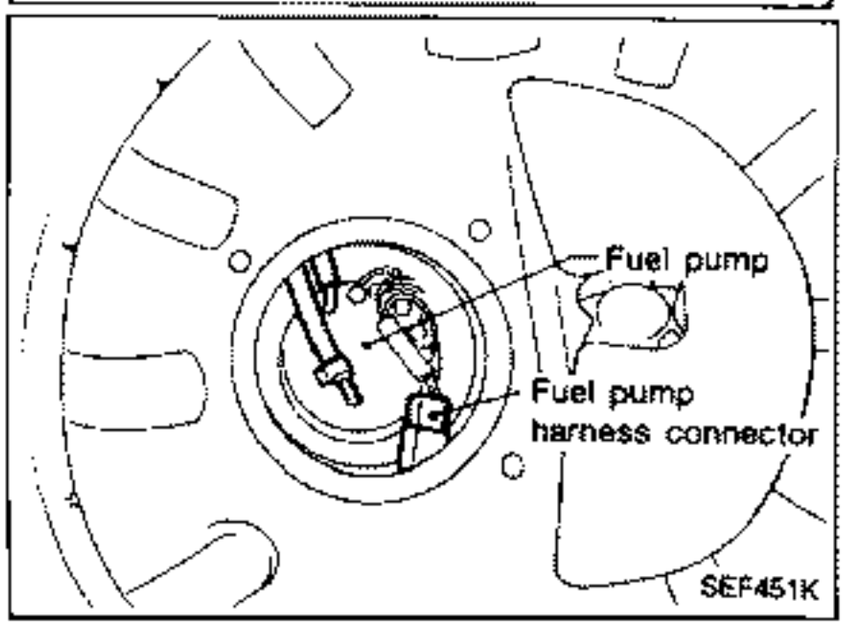

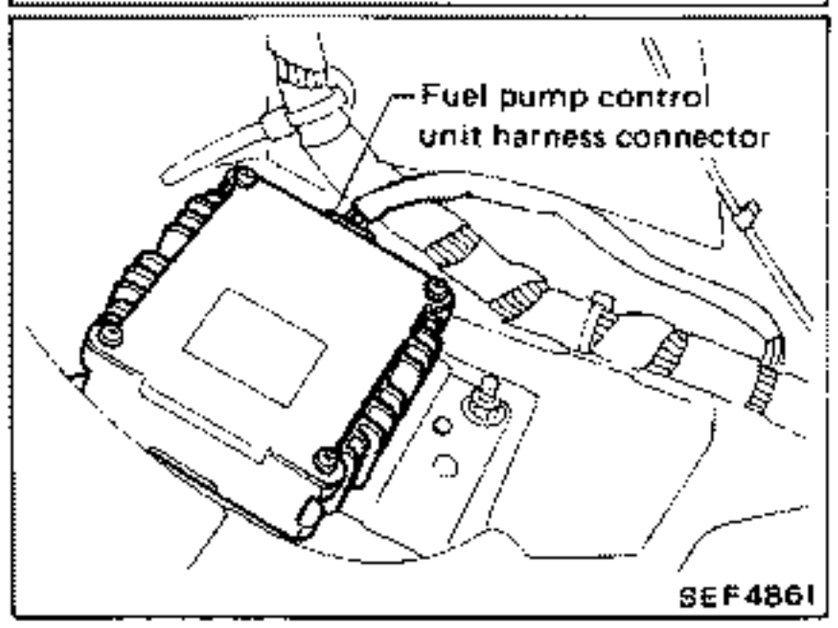

Diagnostic Procedure 39 (Cont'd)

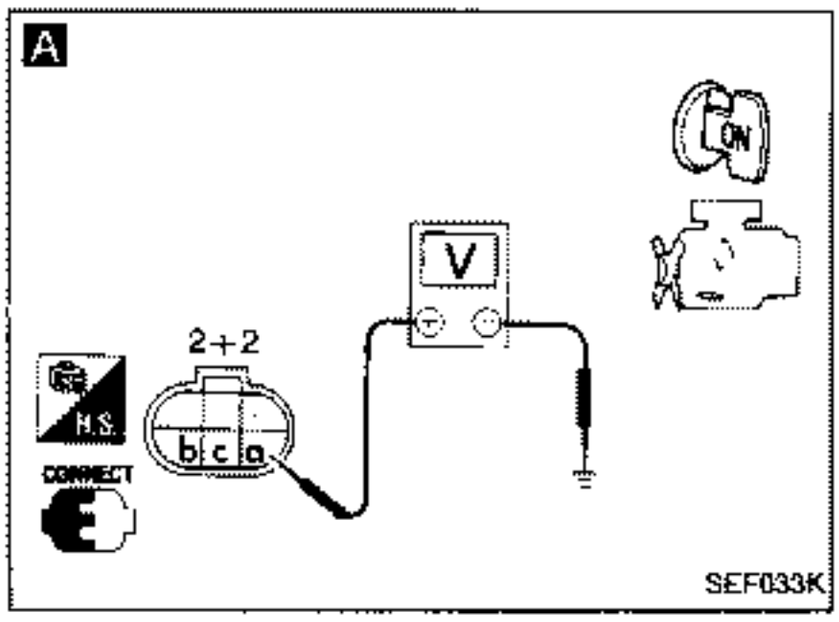

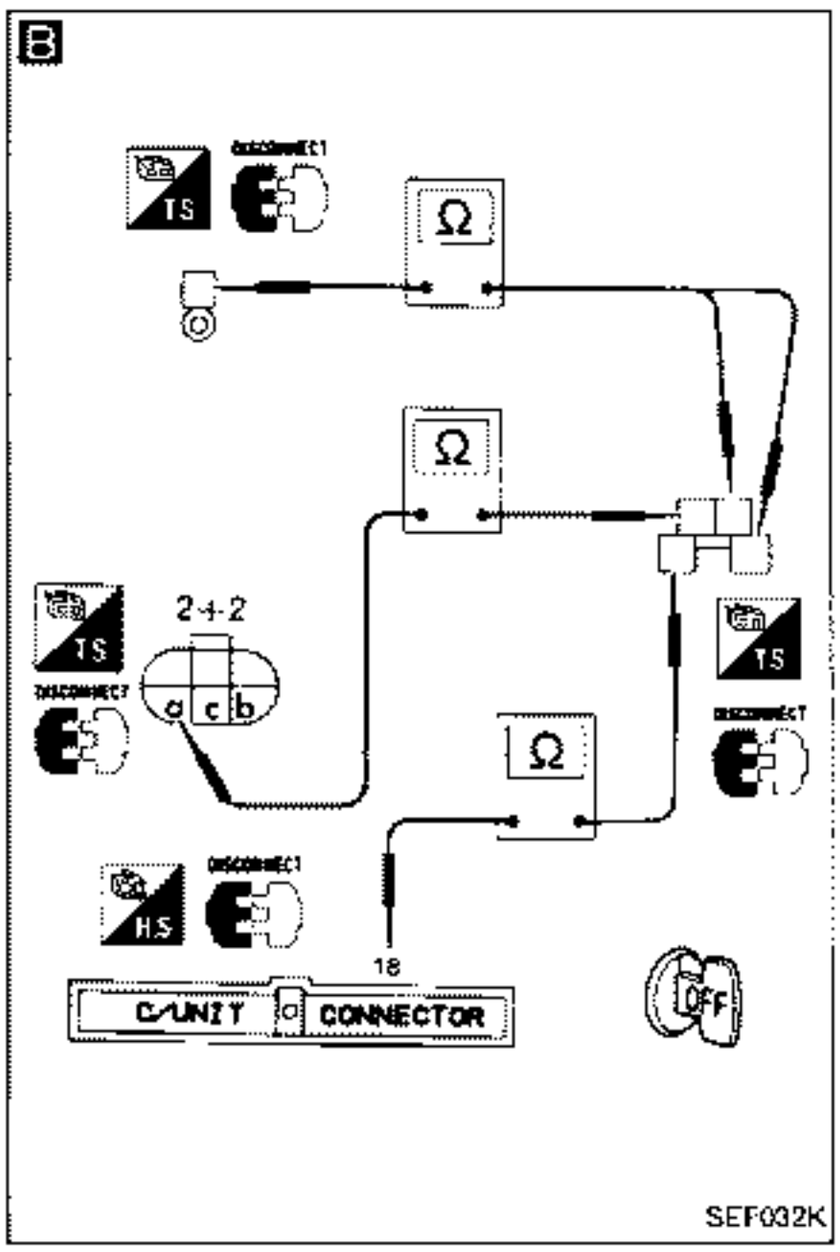

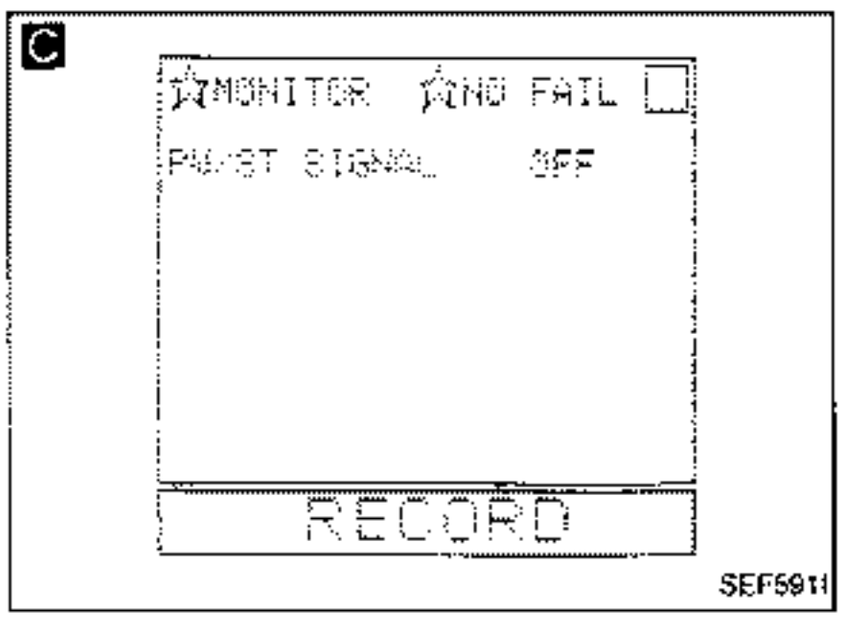

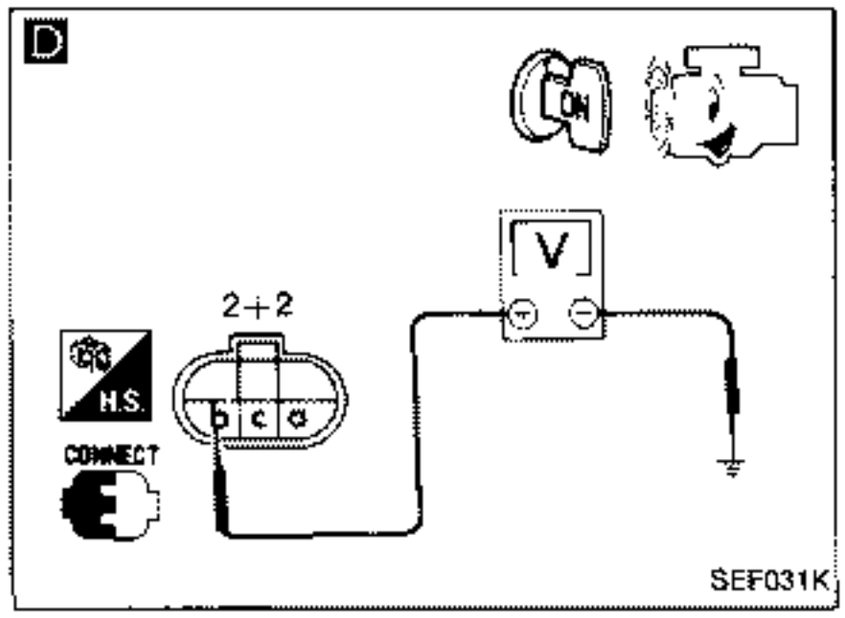

INSPECTION START

A

CHECK POWER SUPPLY.
1) Turn ignition switch "ON".
2) Check voltage between fuel pump connector terminal ⓐ and ground.
Battery voltage indication should appear for 1 second after turning ignition switch "ON".

N.G. → **B**

Check the following items.
1) "G" fusible link
2) Harness continuity between
- battery ⊕ terminal and fuel pump relay
- fuel pump relay and fuel pump
- fuel pump relay and E.C.U. terminal ⑱

Continuity should exist.

O.K. ↓

C

CHECK COMPONENT
(Fuel pump relay).
Perform "FUEL PUMP RELAY TEST" in "ACTIVE TEST" mode with CONSULT.

OR

Refer to "Electrical Components Inspection".
(See page EF & EC-184.)

D

CHECK GROUND CIRCUIT.
Check voltage between fuel pump terminal ⓑ and ground under the following conditions.

Idling	Approx. 3 - 6V
For 30 seconds after starting engine	Battery voltage

N.G. → **E**

Check the following items.
Harness continuity between
- fuel pump and fuel pump control unit
- fuel pump control unit and E.C.U. terminal ⑩④

Continuity should exist.

O.K. ↓

CHECK COMPONENT
(Fuel pump).
Refer to "Electrical Components Inspection".
(See page EF & EC-179.)

N.G. ↓

Replace fuel pump control unit.

O.K. ↓

INSPECTION END

Diagnostic Procedure 39 (Cont'd)

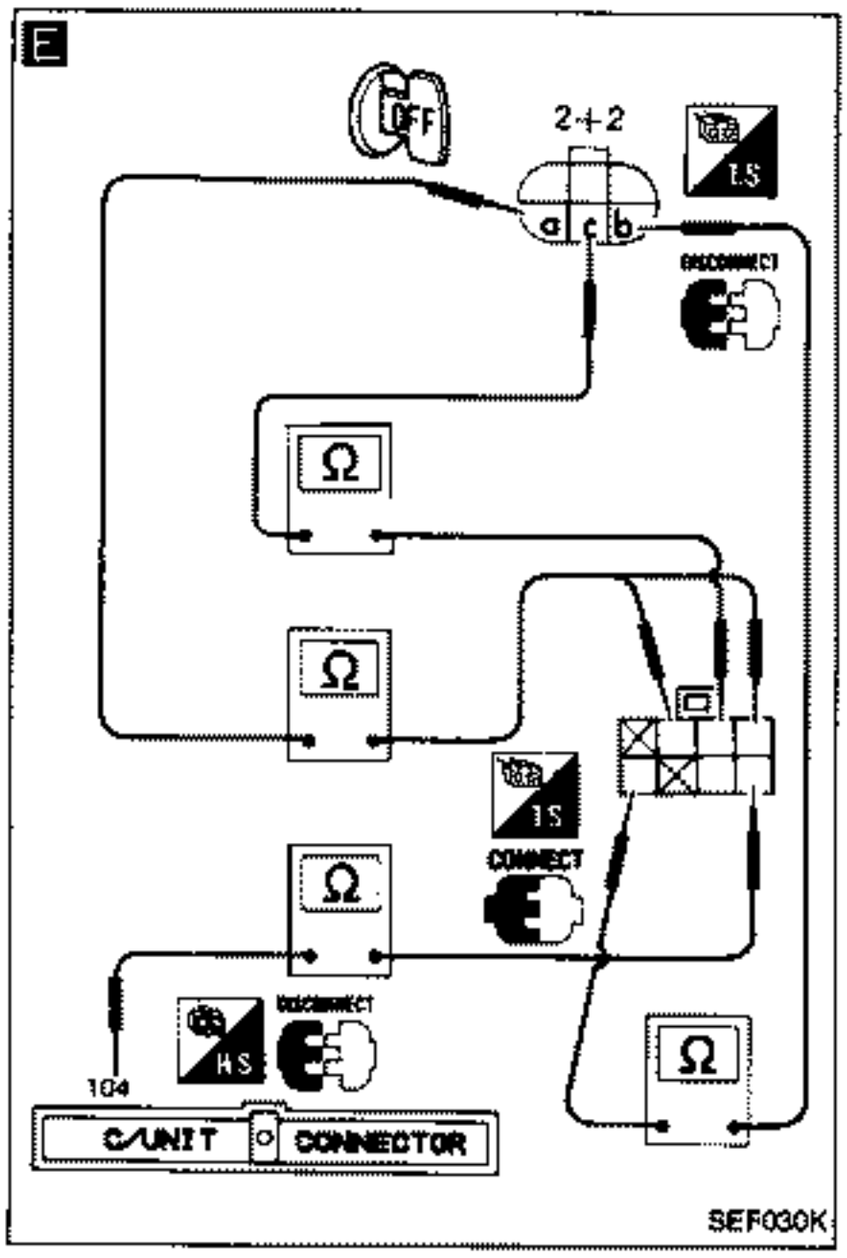

NOTE

Diagnostic Procedure 40

AIR REGULATOR

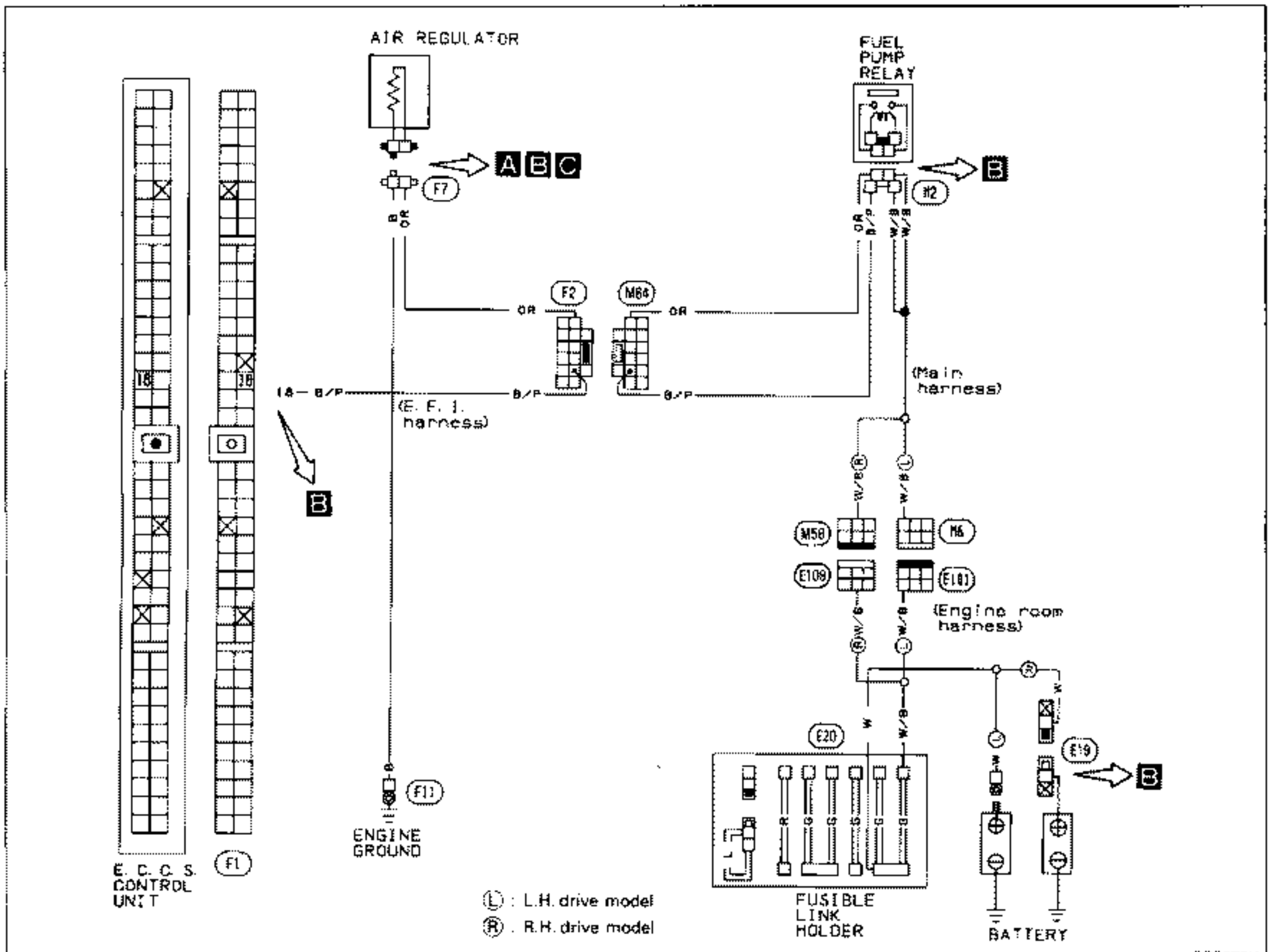

Harness layout

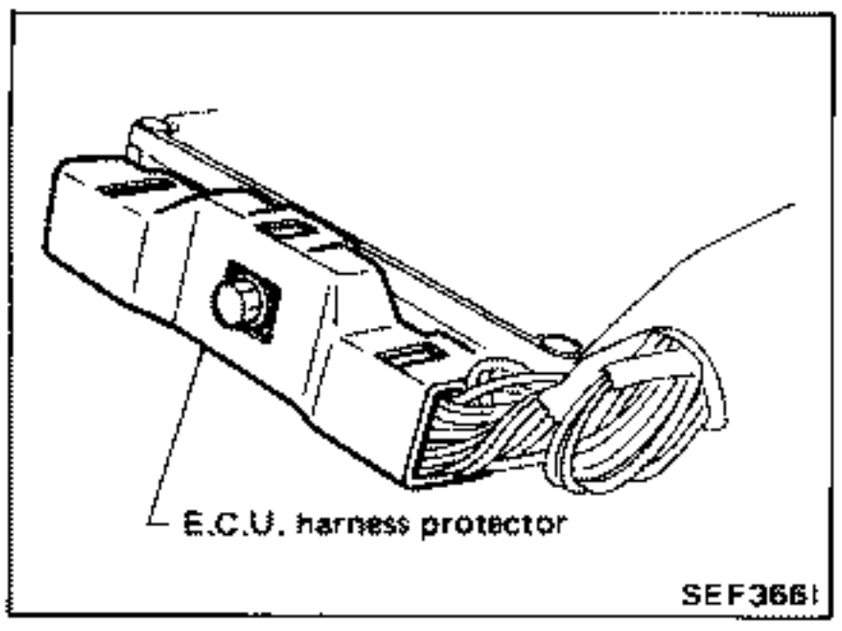

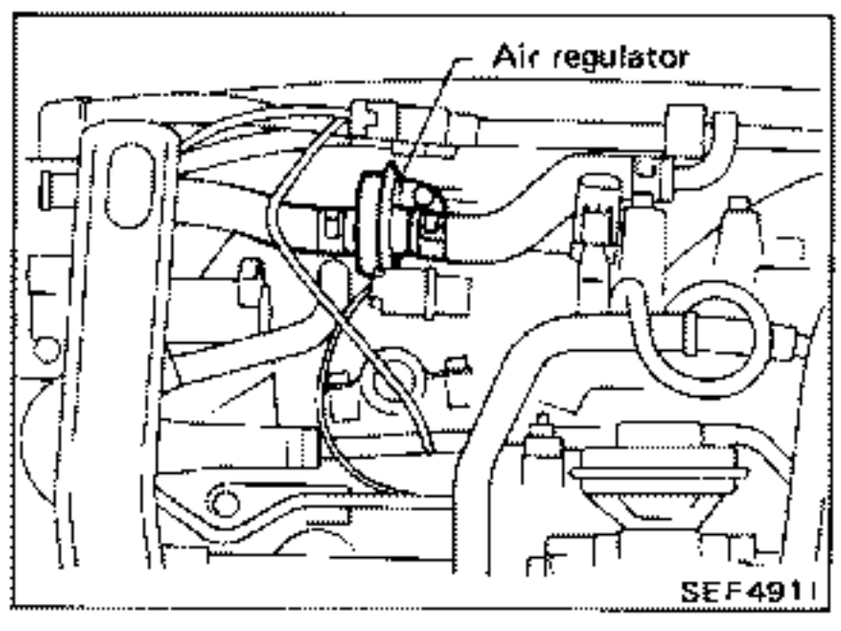

Diagnostic Procedure 40 (Cont'd)

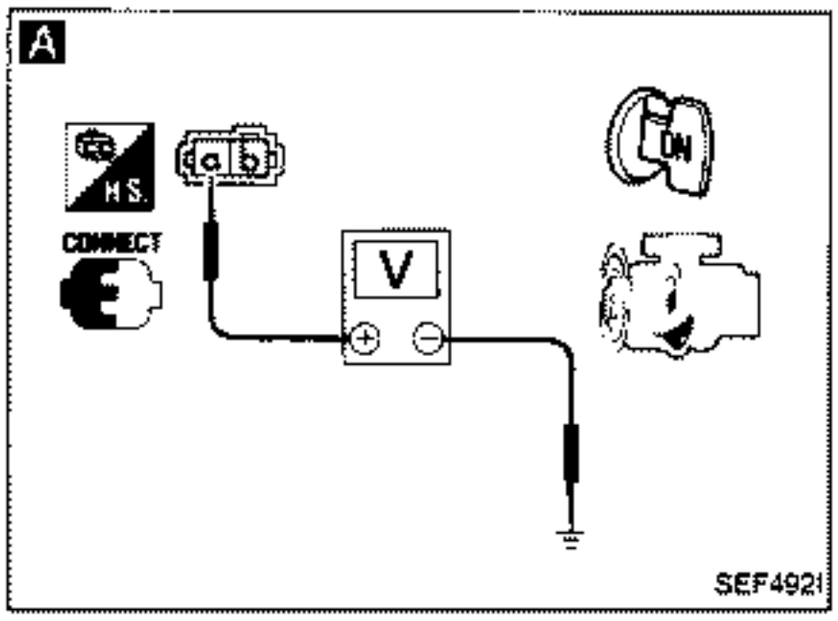

INSPECTION START

A

CHECK POWER SUPPLY.
1) Start engine.
2) Check voltage between air regulator terminal ⓐ and ground.
Voltage: Battery voltage

N.G. →

B

Check the following items.
1) Harness continuity between
- air regulator and fuel pump relay
- fuel pump relay and battery ⊕ terminal
- fuel pump relay and E.C.U. terminal ⑱

Continuity should exist.

2) "G" fusible link

O.K.

C

CHECK COMPONENT
(Fuel pump relay).

Perform "FUEL PUMP RELAY TEST" in "ACTIVE TEST" mode with CONSULT.

OR

Refer to "Electrical Components Inspection". (See page EF & EC-184.)

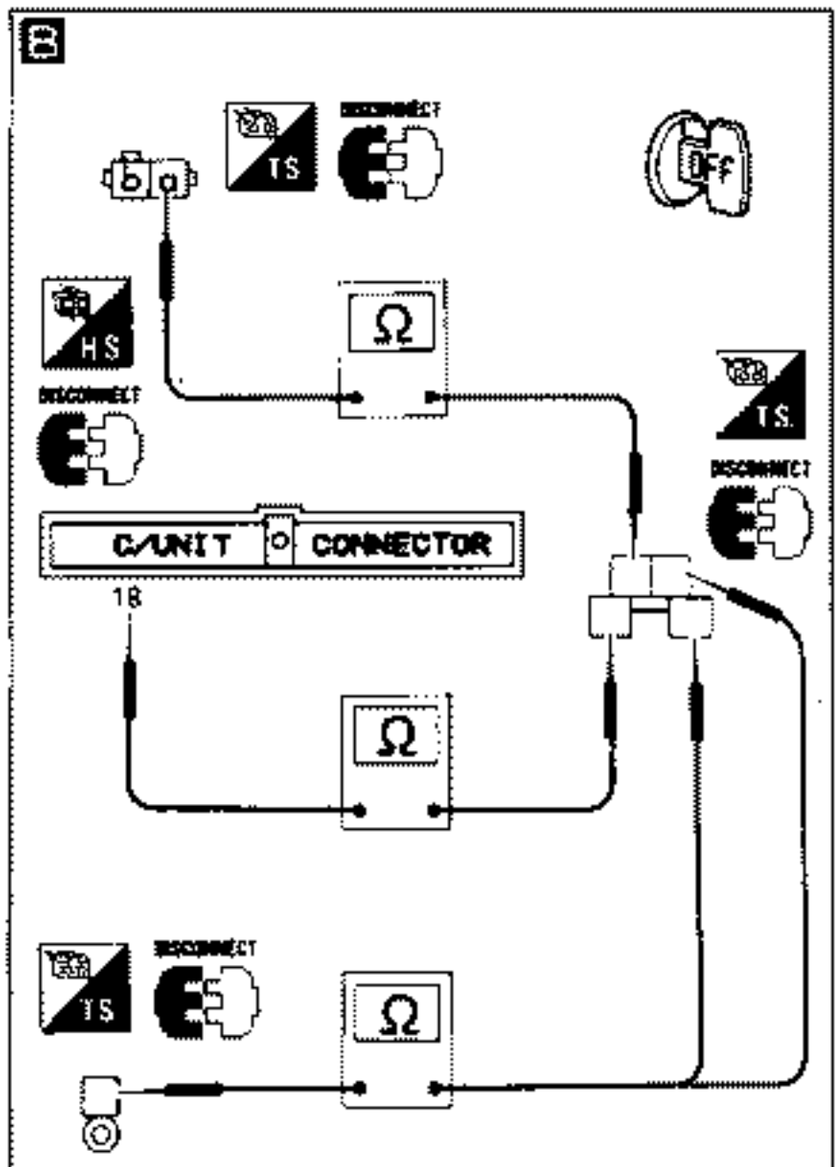

D

CHECK GROUND CIRCUIT.
Check harness continuity between air regulator terminal ⓑ and ground.
Continuity should exist.

N.G. → Repair or replace harness or connectors.

O.K.

CHECK COMPONENT
(Air regulator).
Refer to "Electrical Components Inspection". (See page EF & EC-182.)

N.G. → Repair or replace air regulator.

O.K.

INSPECTION END

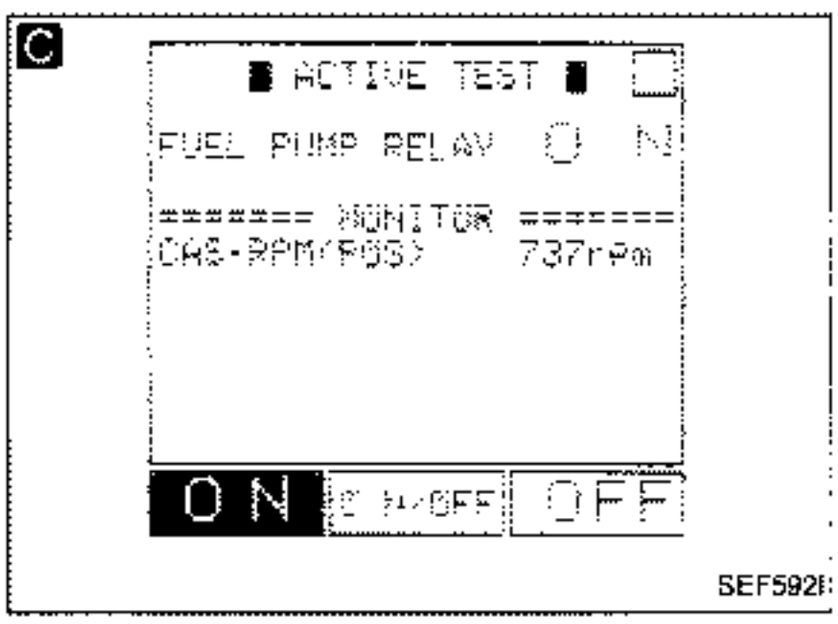

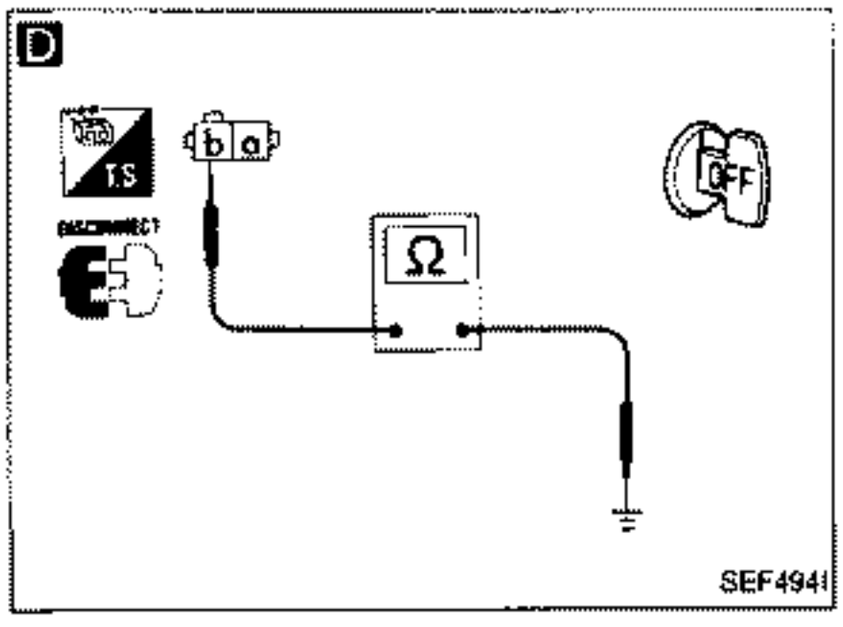

Diagnostic Procedure 41

A.A.C. VALVE

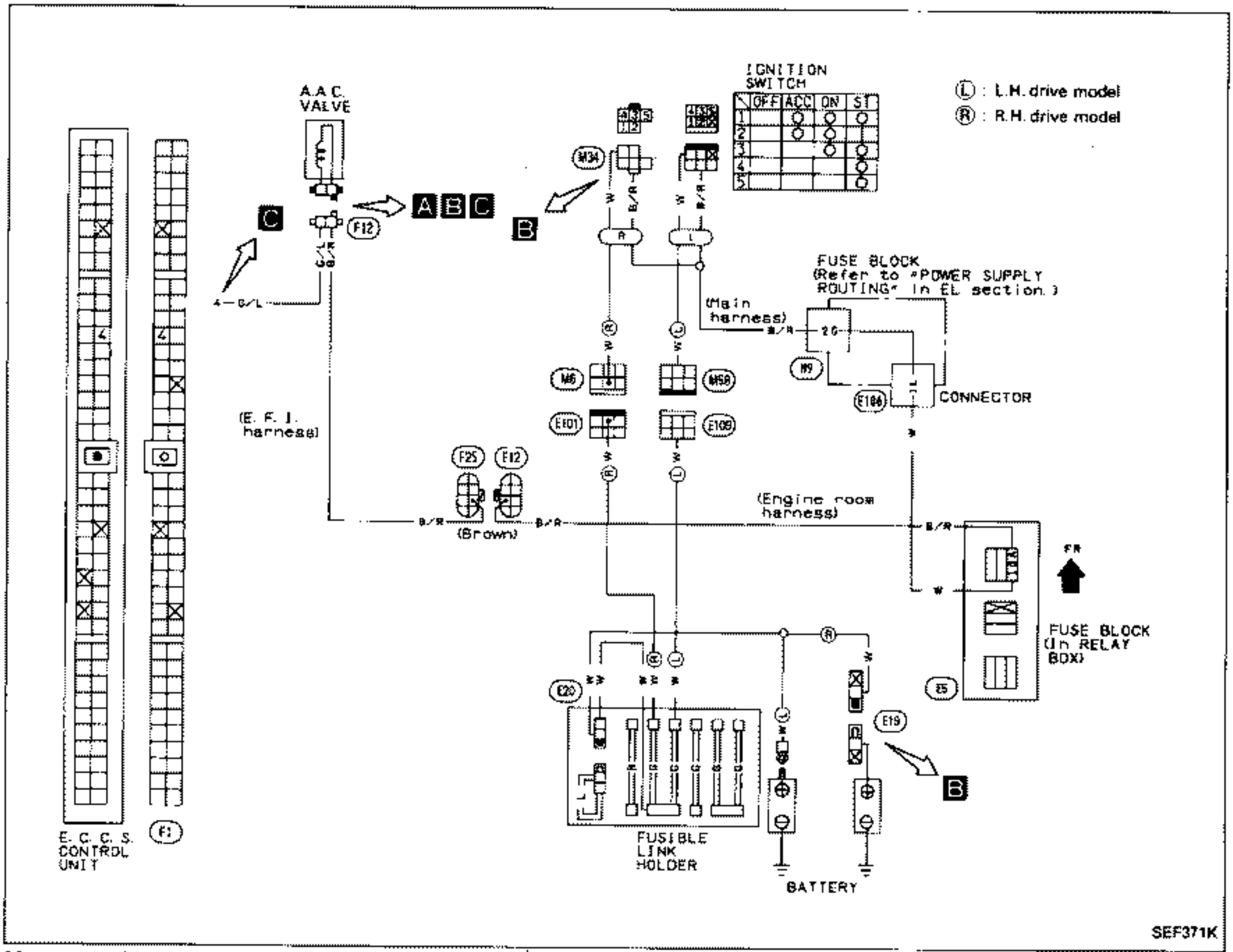

Harness layout

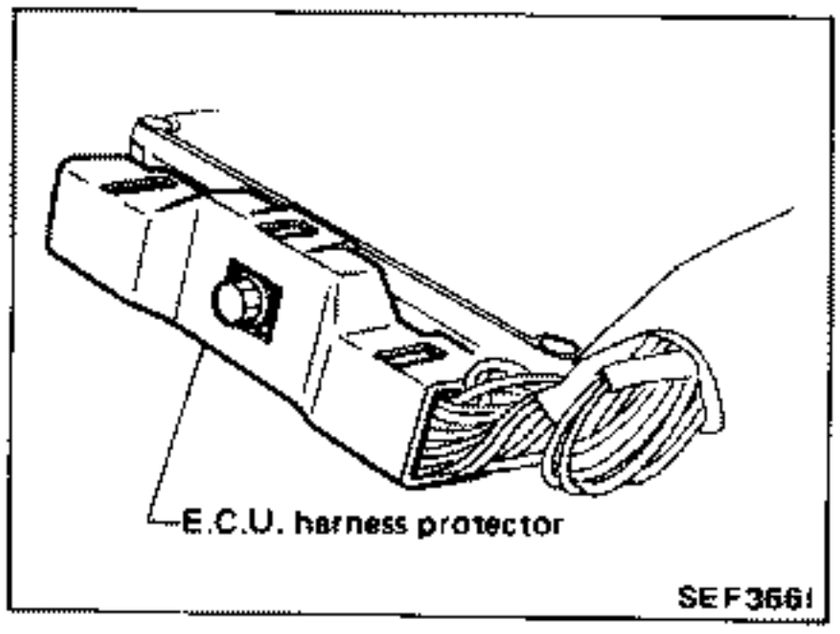

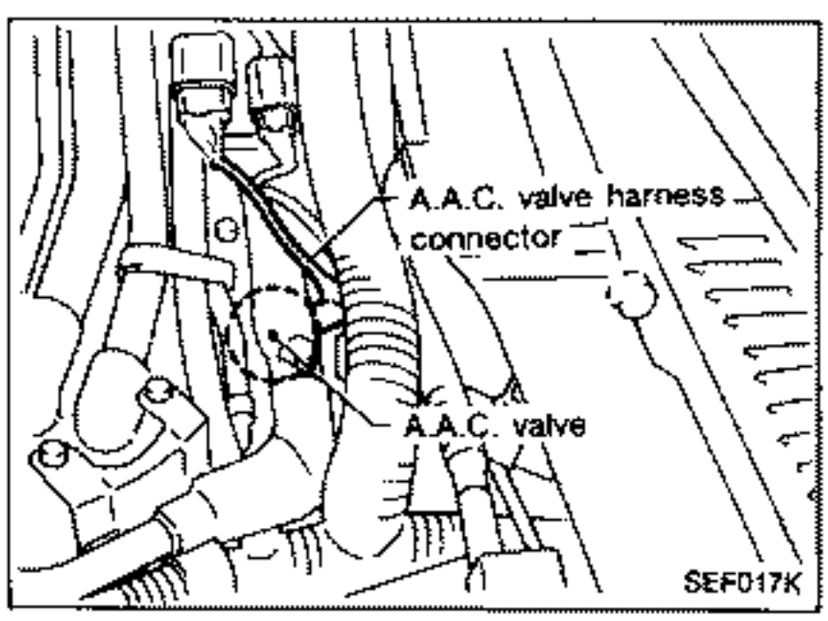

Diagnostic Procedure 41 (Cont'd)

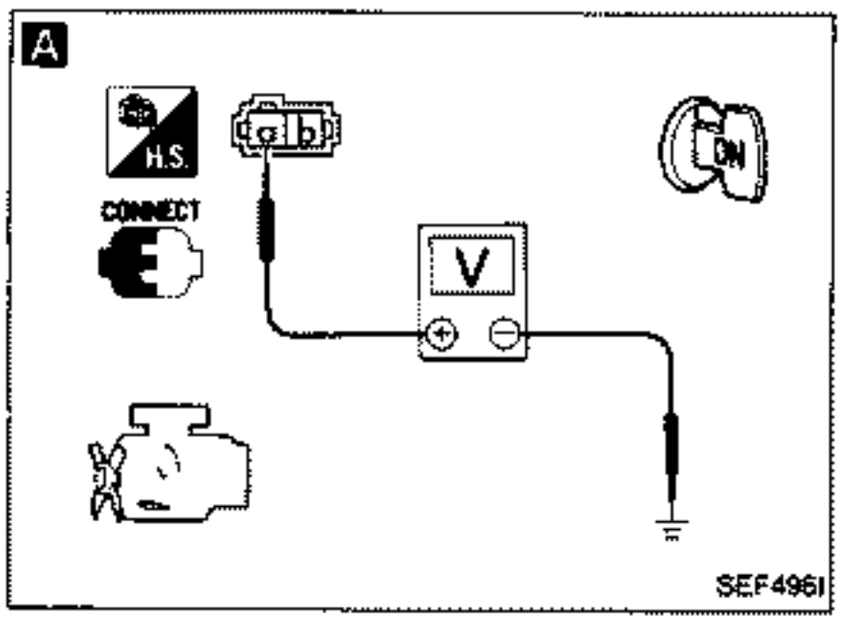

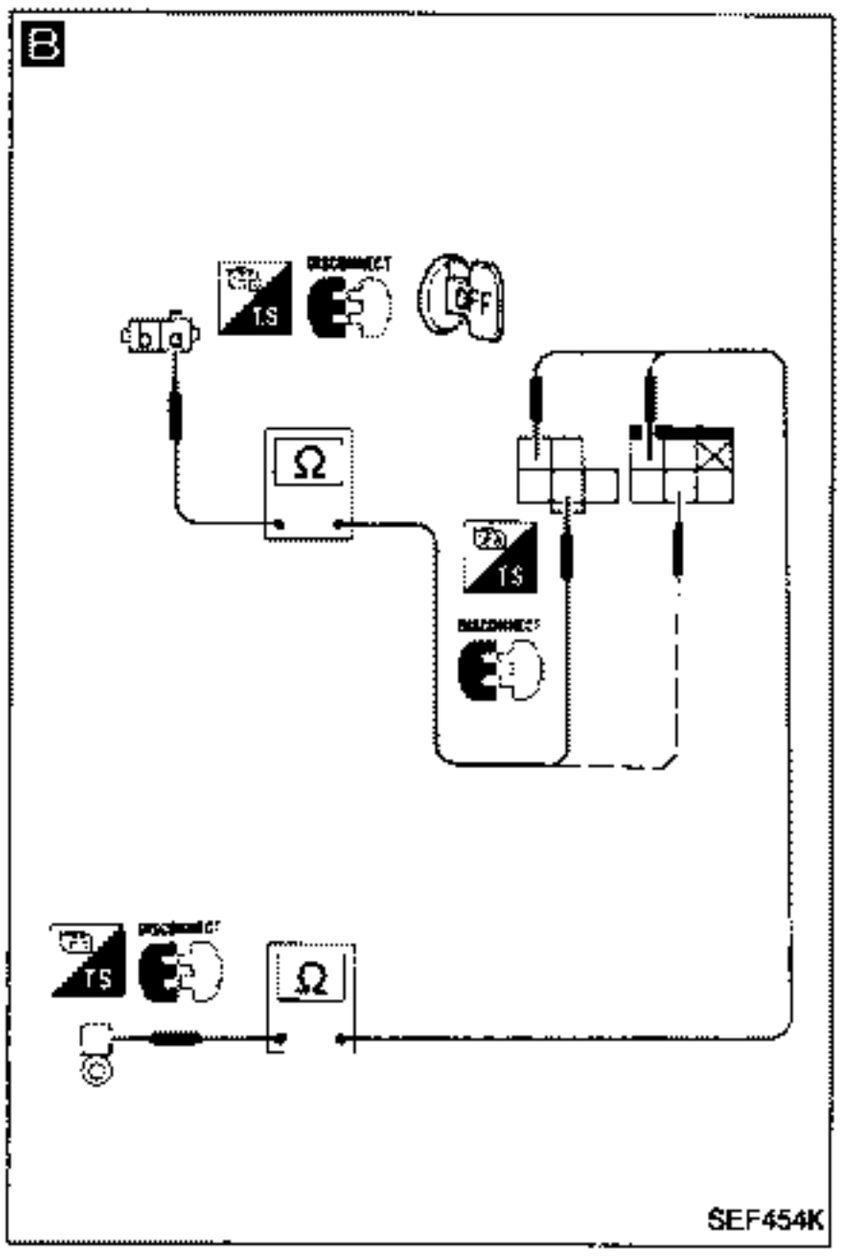

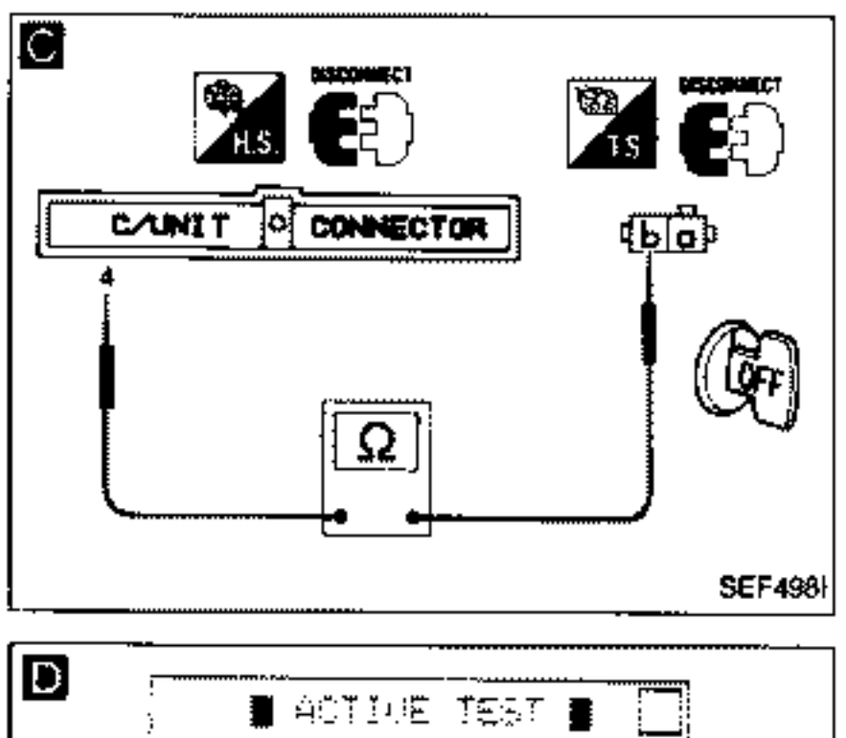

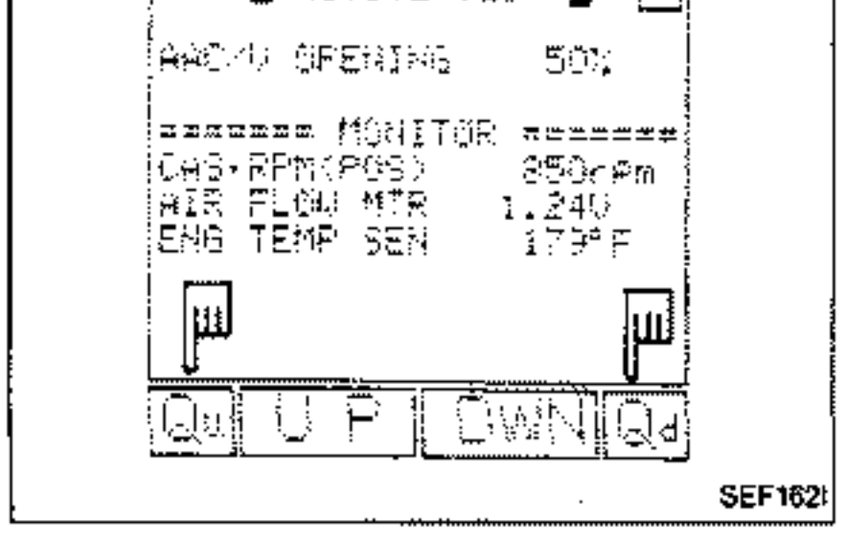

INSPECTION START

A

CHECK POWER SUPPLY.
1) Turn ignition switch "ON".
2) Check voltage between A.A.C. valve terminal ⓐ and ground.
Voltage: Battery voltage

N.G. → **B**

Check the following items.
1) "G" fusible link
2) Ignition switch
3) "10A" fuses
4) Harness continuity between terminals:
- A.A.C. valve and ignition switch
- Ignition switch and battery ⊕ terminal.

O.K. ↓

C

CHECK HARNESS CONTINUITY BETWEEN A.A.C. VALVE AND E.C.U.
Check harness continuity between A.A.C. valve terminal ⓑ and E.C.U. terminal ④.
Continuity should exist.

N.G. → Repair or replace harness or connectors.

O.K. ↓

D

CHECK COMPONENT (A.A.C. valve).

Perform "AAC VALVE OPENING TEST" in "ACTIVE TEST" mode with CONSULT.

— OR —

Refer to "Electrical Components Inspection". (See page EF & EC-181.)

N.G. → Repair or replace A.A.C. valve.

O.K. ↓

INSPECTION END

Diagnostic Procedure 42

F.I.C.D. SOLENOID VALVE

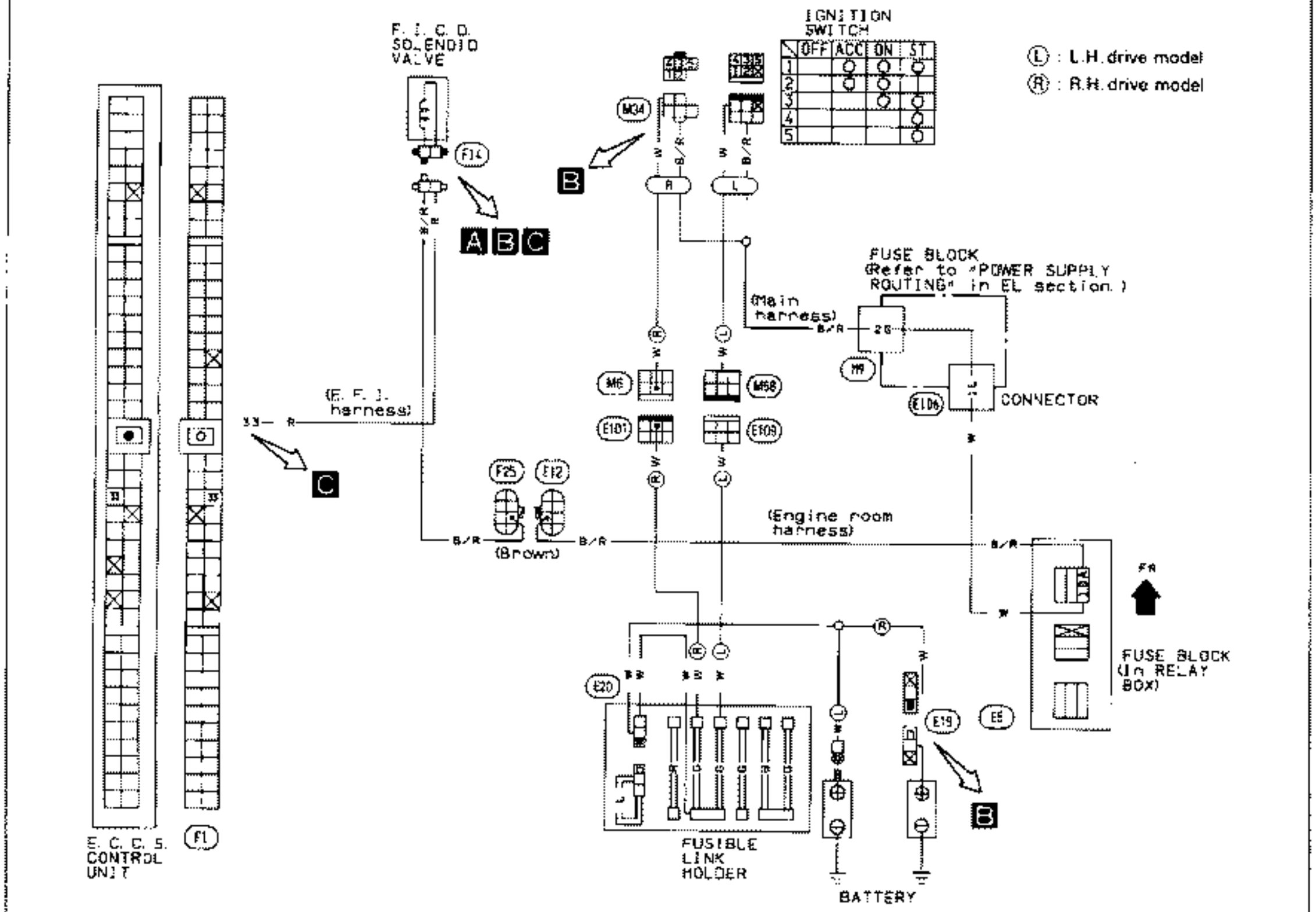

Harness layout

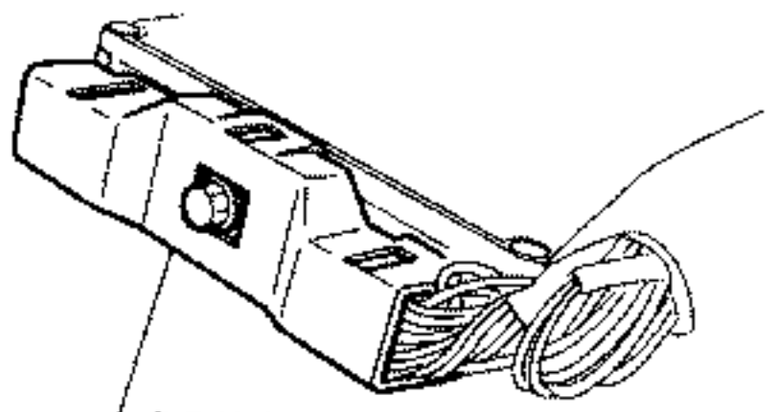

F.I.C.D. solenoid valve harness connector is located near A.A.C. valve harness connector.

Diagnostic Procedure 42 (Cont'd)

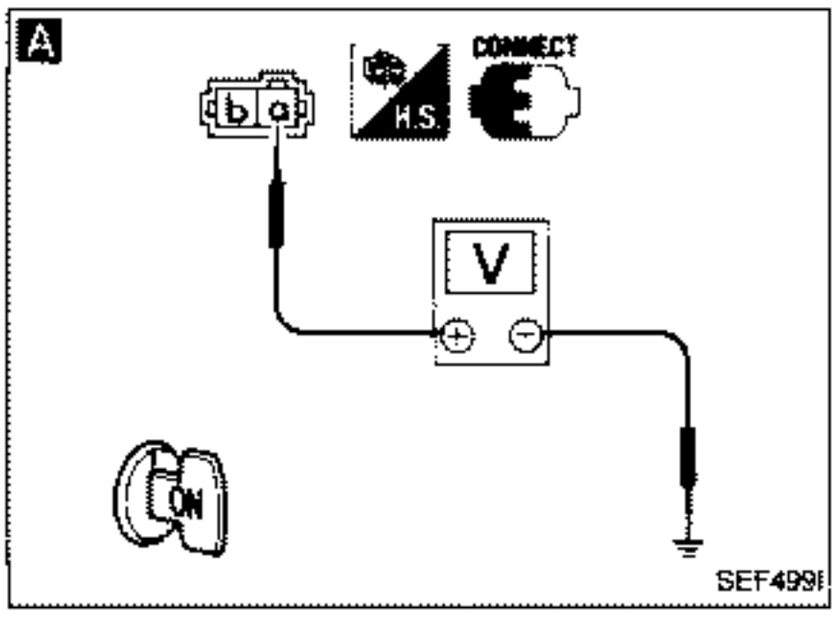

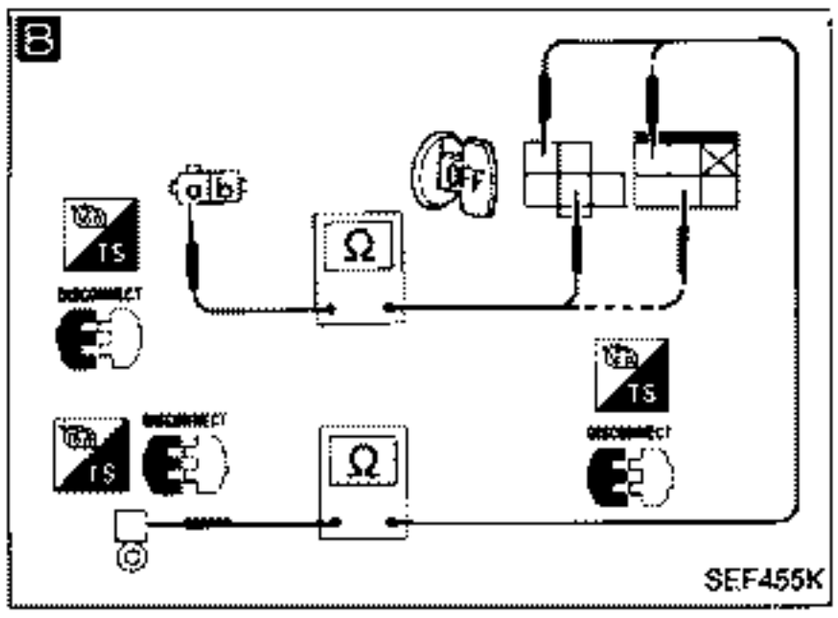

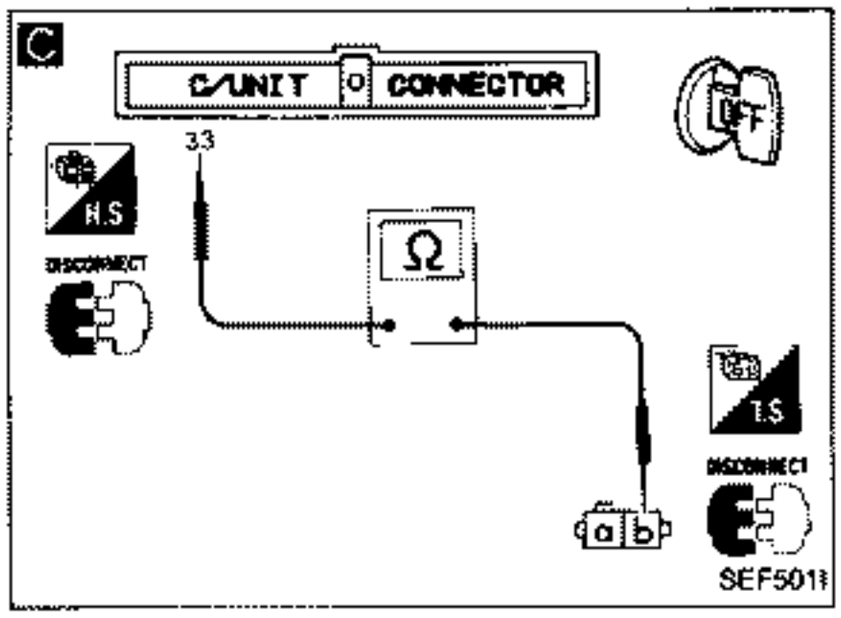

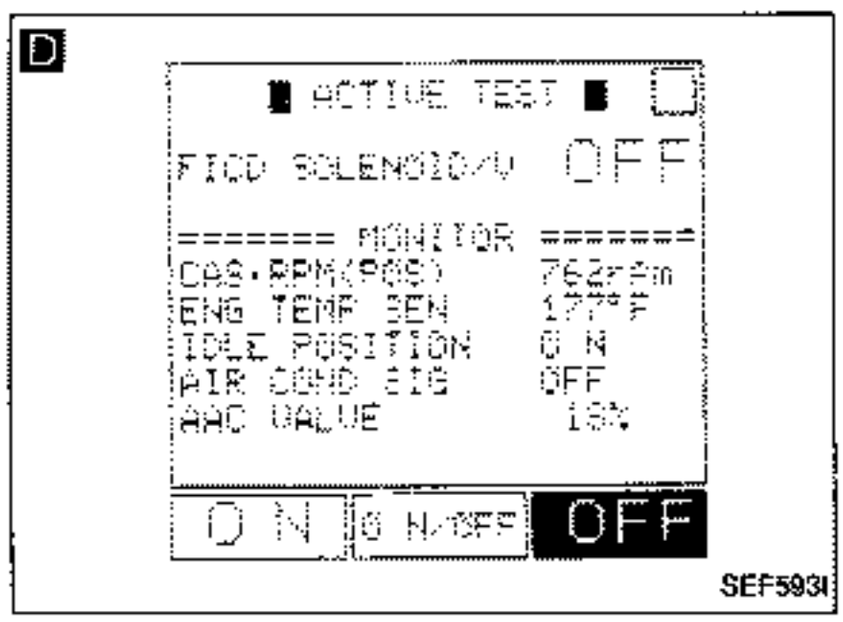

INSPECTION START

A

CHECK POWER SUPPLY.
1) Turn ignition switch "ON".
2) Check voltage between F.I.C.D. solenoid valve terminal ⓐ and ground.
Voltage: Battery voltage

N.G. →

B

Check the following items.
1) "G" fusible link
2) "10A" fuses
3) Ignition switch
4) Harness continuity between terminals:
- F.I.C.D. solenoid valve and ignition switch
- Ignition switch and battery ⊕ terminal.

Continuity should exist.

O.K. ↓

C

CHECK HARNESS CONTINUITY BETWEEN F.I.C.D. SOLENOID VALVE AND E.C.U.
Check harness continuity between F.I.C.D. solenoid valve terminal ⓑ and E.C.U. terminal ㉝.
Continuity should exist.

N.G. →

Repair or replace harness or connectors.

O.K. ↓

D

CHECK COMPONENT (F.I.C.D. solenoid valve).

Perform "F.I.C.D. SOLENOID VALVE TEST" in "ACTIVE TEST" mode with CONSULT.

OR

Refer to "Electrical Components Inspection". (See page EF & EC-182.)

N.G. →

Repair or replace F.I.C.D. solenoid valve.

O.K. ↓

INSPECTION END

Diagnostic Procedure 43

A.I.V. CONTROL SOLENOID VALVE

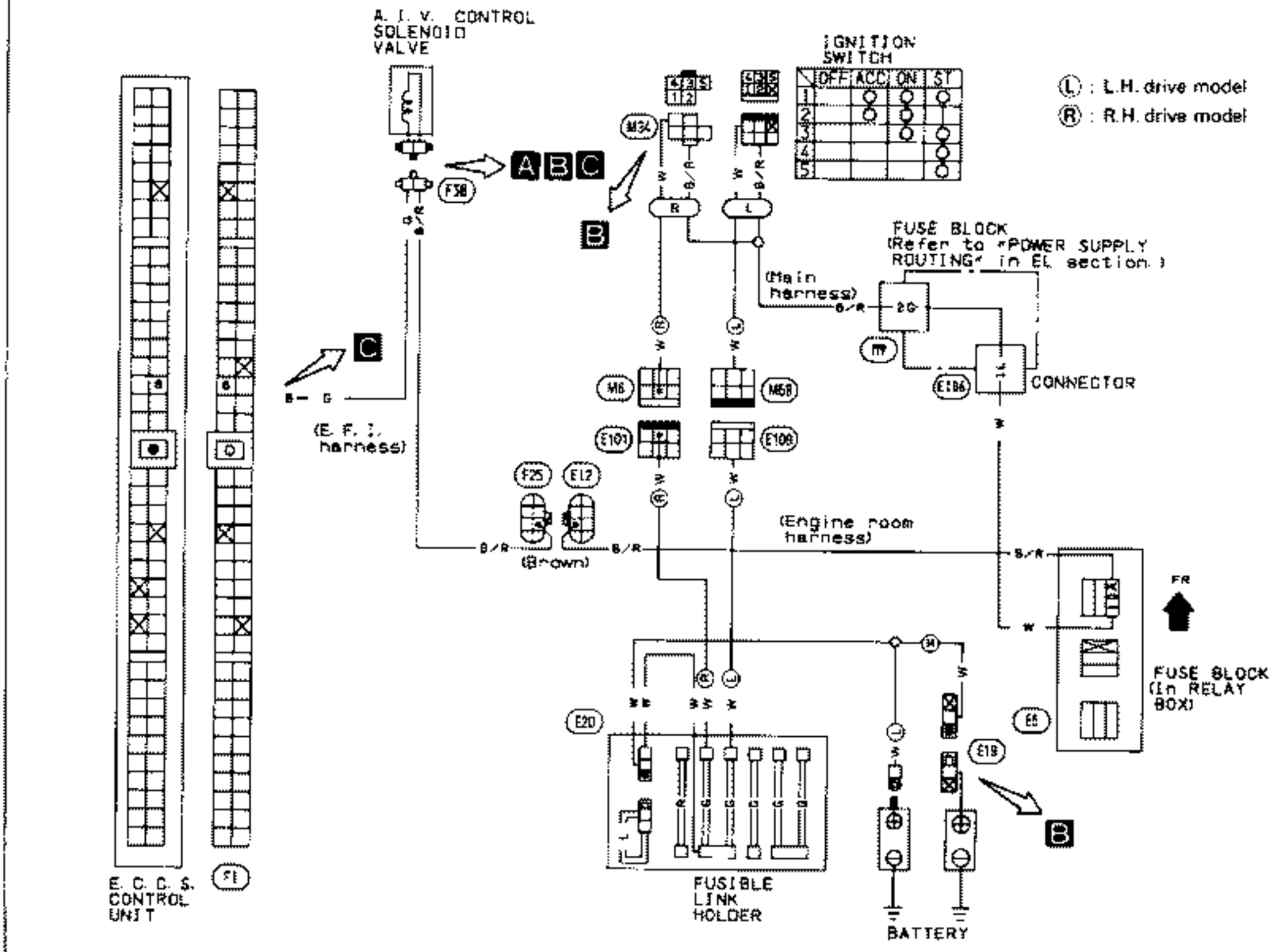

Harness layout

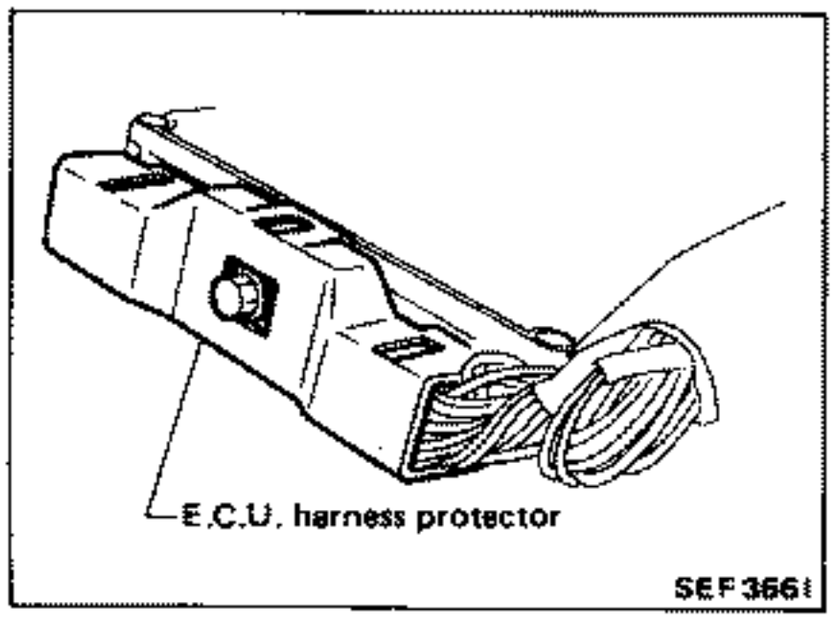

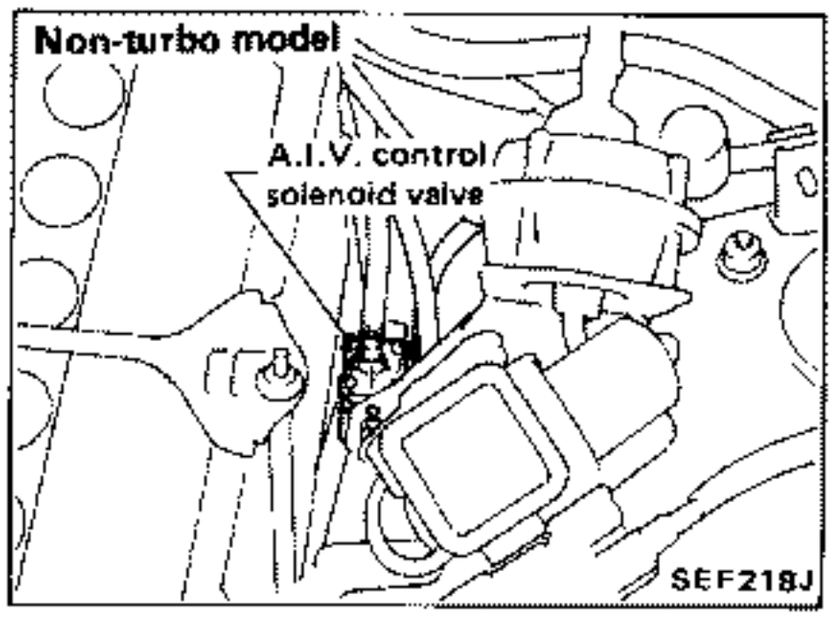

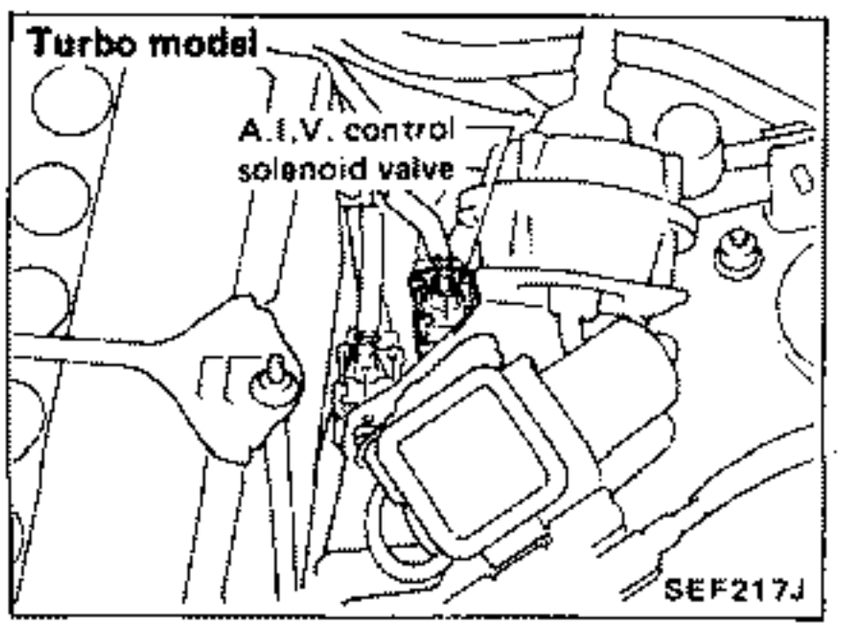

Diagnostic Procedure 43 (Cont'd)

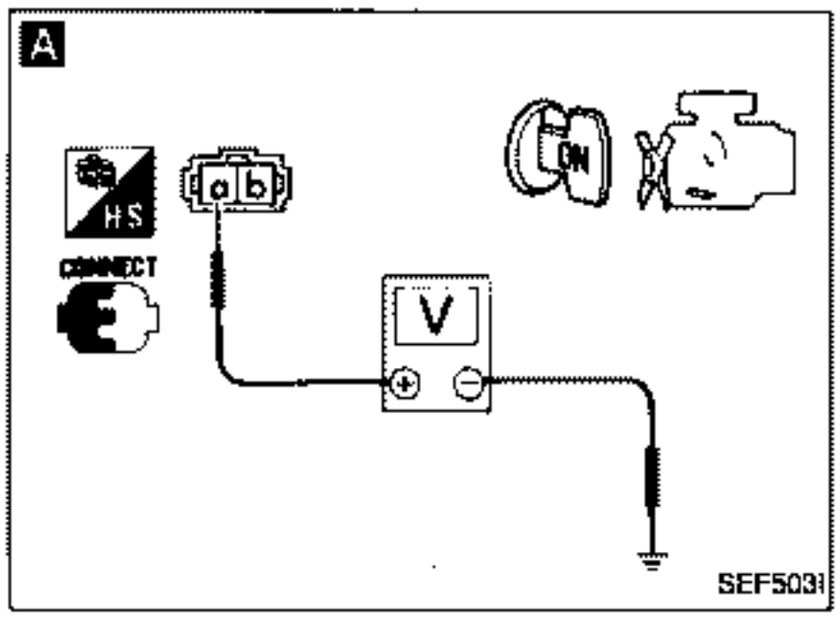

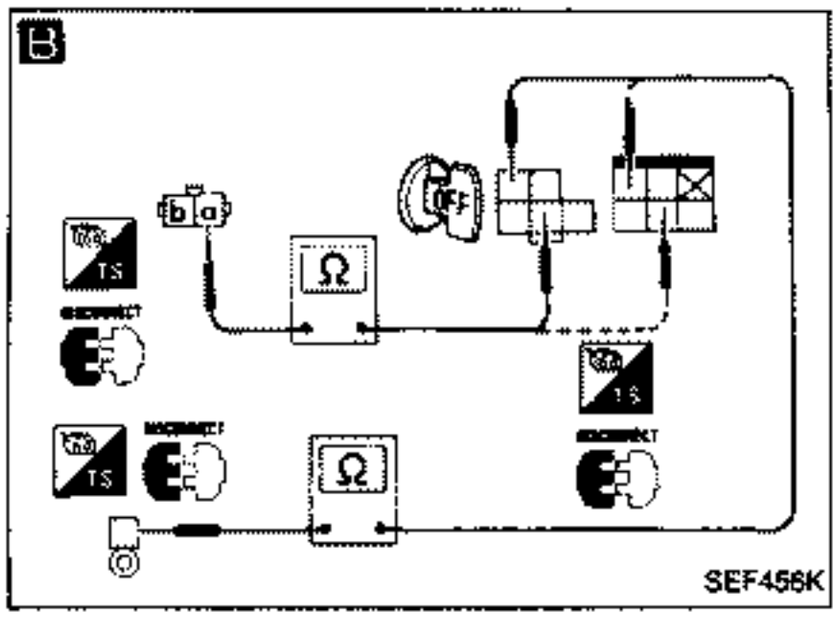

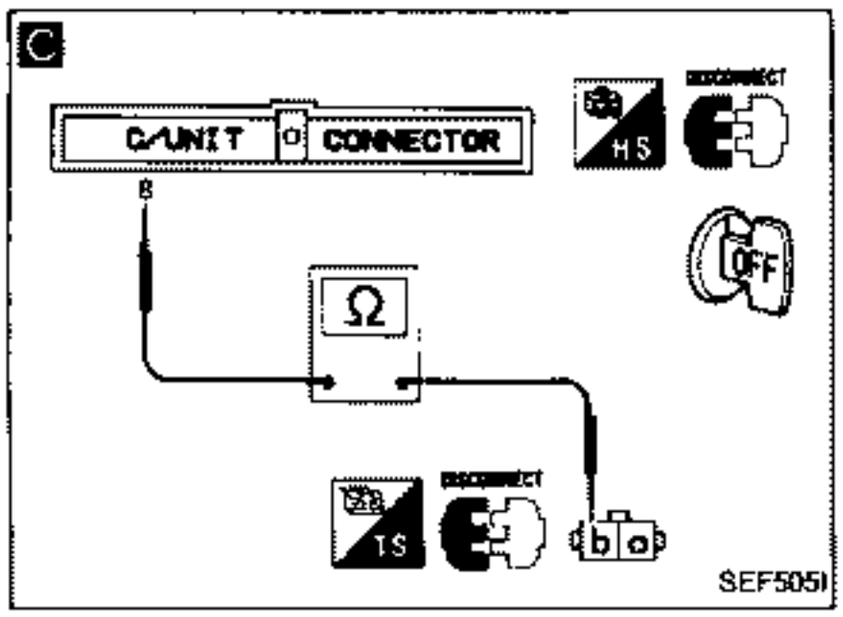

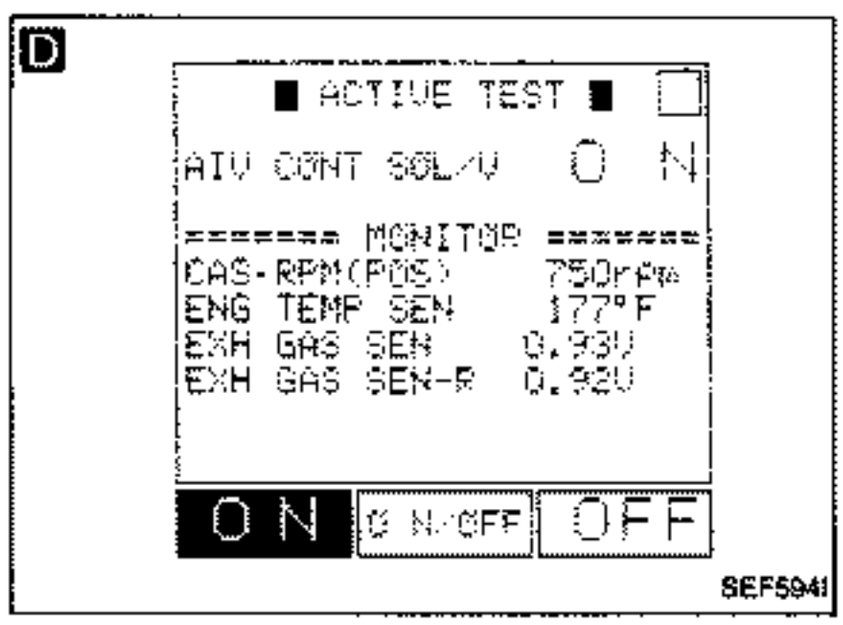

INSPECTION START

A

CHECK POWER SUPPLY.
1) Turn ignition switch "ON".
2) Check voltage between A.I.V. control solenoid valve terminal ⓐ and ground.
Voltage: Battery voltage

N.G. → **B**

Check the following items.
1) "G" fusible link
2) "10A" fuses
3) Ignition switch
4) Harness continuity between terminals:
- A.I.V. control solenoid valve and ignition switch
- Ignition switch and battery ⊕ terminal.

Continuity should exist.

O.K. ↓

C

CHECK HARNESS CONTINUITY BETWEEN A.I.V. CONTROL SOLENOID VALVE AND E.C.U.
Check harness continuity between A.I.V. control solenoid valve terminal ⓑ and E.C.U. terminal ⑧.
Continuity should exist.

N.G. → Repair or replace harness or connectors.

O.K. ↓

D

CHECK COMPONENT
(A.I.V. control solenoid valve).

Perform "A.I.V. CONTROL SOLENOID VALVE TEST" in "ACTIVE TEST" mode with CONSULT.

— OR —

Refer to "Electrical Components Inspection". (See page EF & EC-180.)

N.G. → Repair or replace A.I.V. control solenoid valve.

O.K. ↓

INSPECTION END

Diagnostic Procedure 44

P.R.V.R. CONTROL SOLENOID VALVE

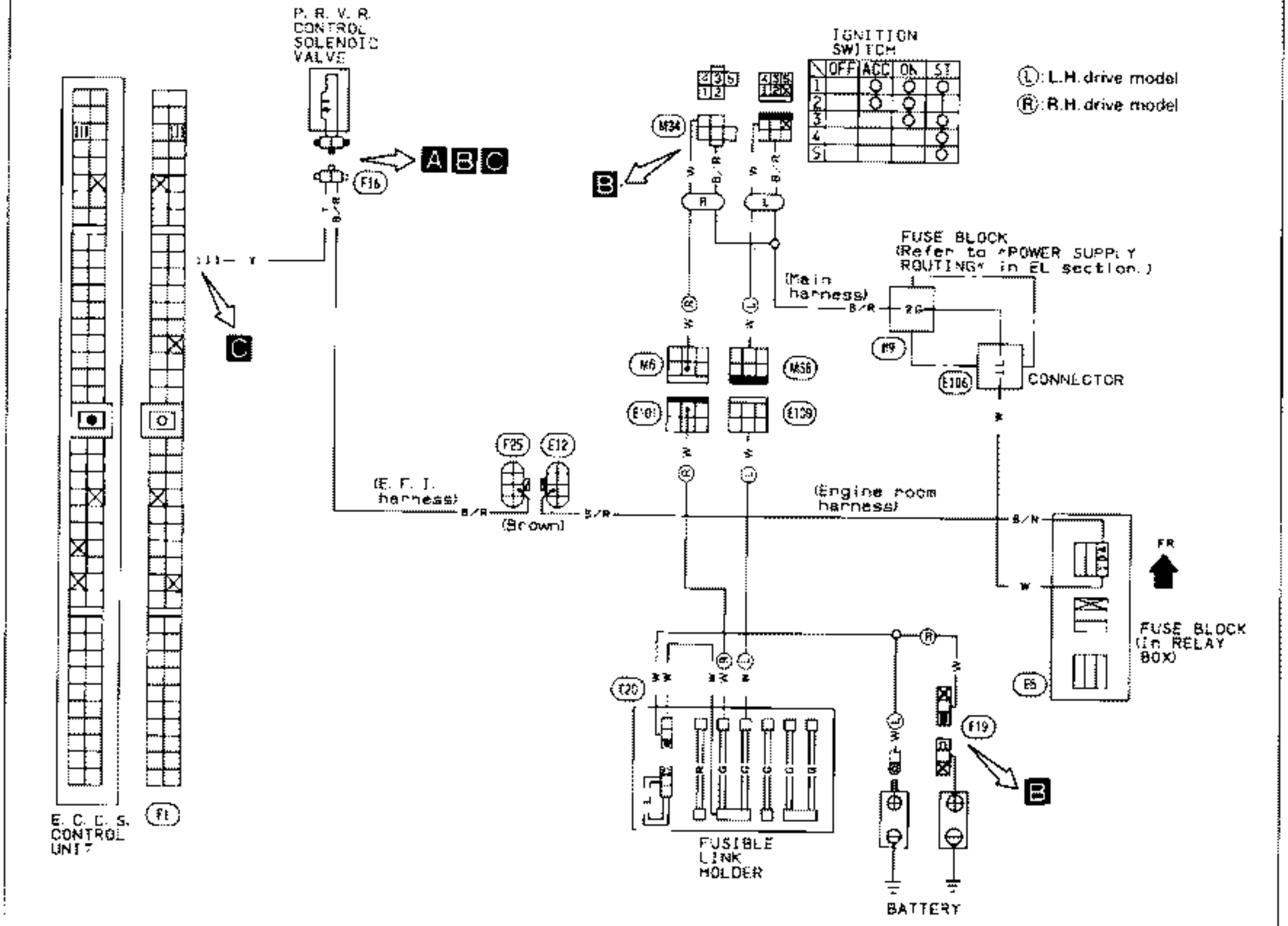

Harness layout

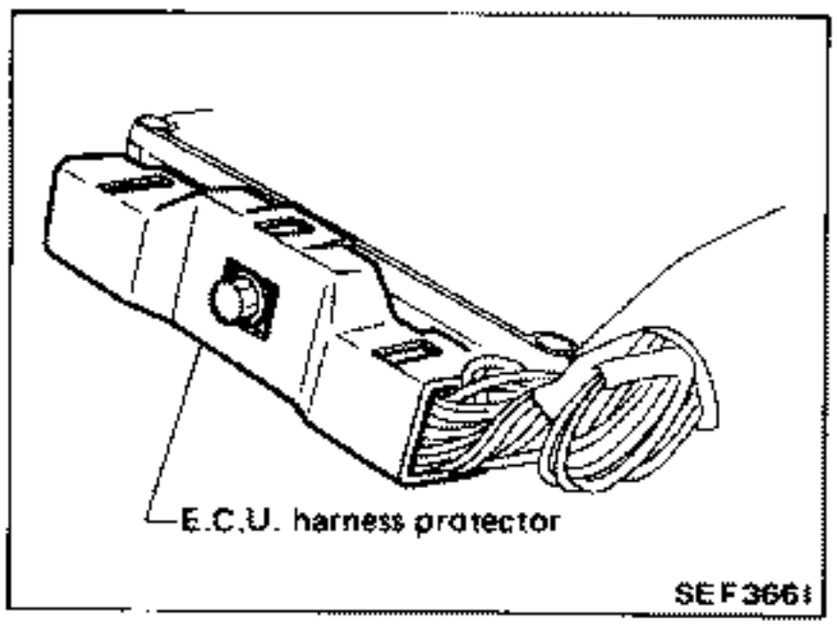

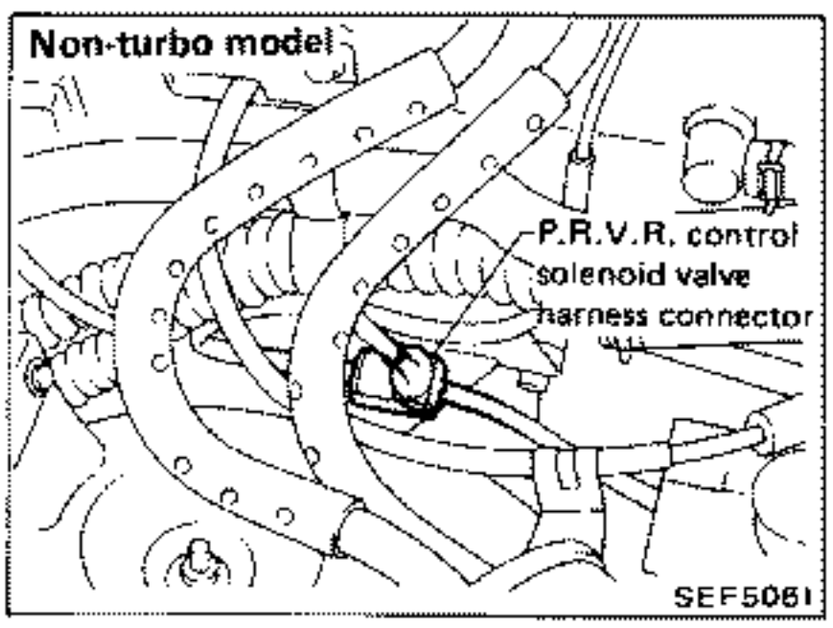

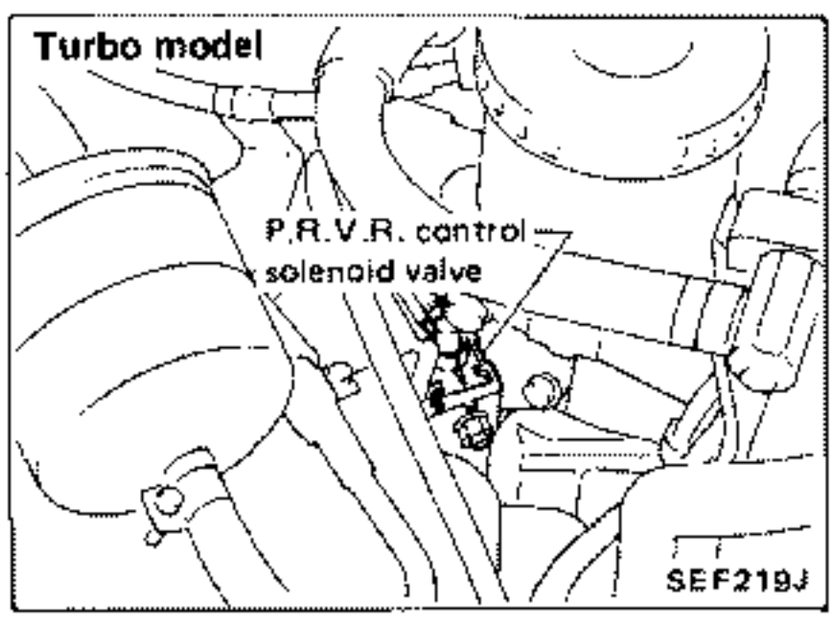

Diagnostic Procedure 44 (Cont'd)

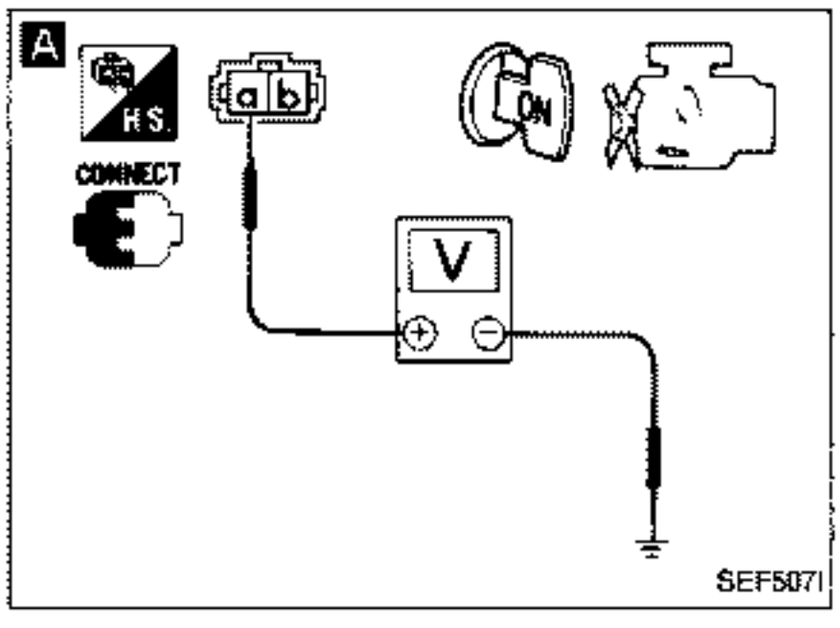

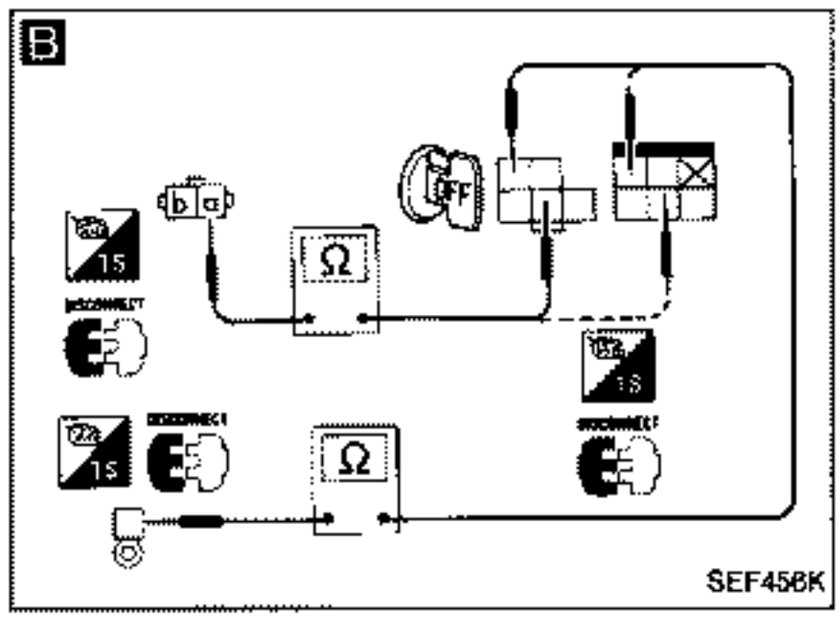

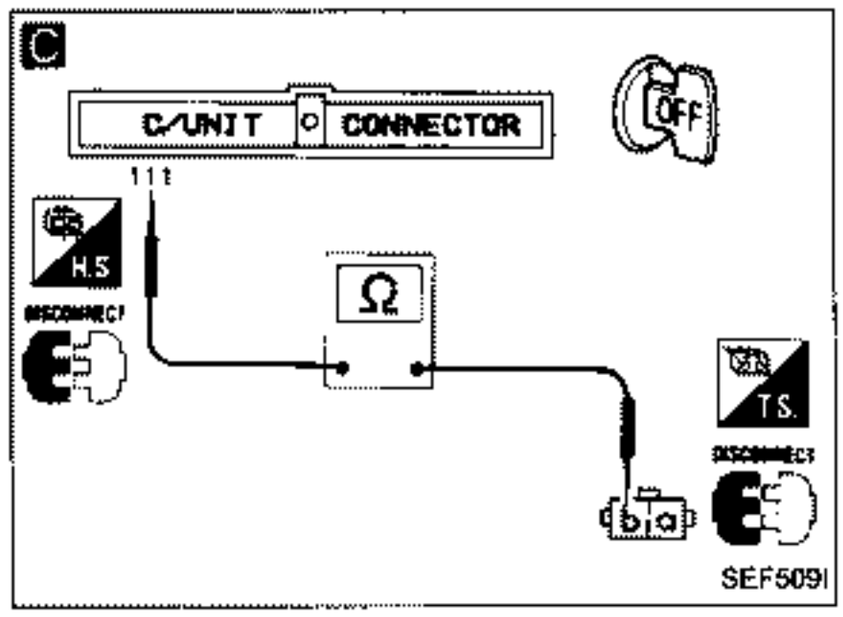

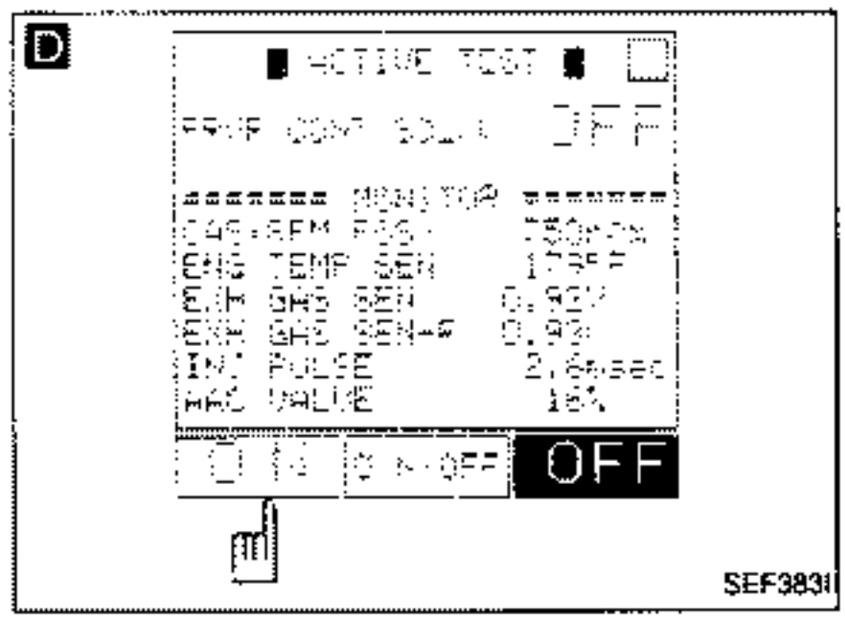

INSPECTION START

A

CHECK POWER SUPPLY.
1) Turn ignition switch "ON".
2) Check voltage between P.R.V.R. control solenoid valve terminal ⓐ and ground.
Voltage: Battery voltage

N.G. →

B

Check the following items.
1) "G" fusible link
2) "10A" fuses
3) Ignition switch
4) Harness continuity between terminals:
- P.R.V.R. control solenoid valve and ignition switch
- Ignition switch and battery ⊕ terminal.

Continuity should exist.

O.K. ↓

C

CHECK HARNESS CONTINUITY BETWEEN P.R.V.R. CONTROL SOLENOID VALVE AND E.C.U.
Check harness continuity between P.R.V.R. control solenoid valve terminal ⓑ and E.C.U. terminal (111)
Continuity should exist.

N.G. → Repair or replace harness or connectors.

O.K. ↓

D

CHECK COMPONENT (P.R.V.R. control solenoid valve).

Perform "P.R.V.R. CONTROL SOLENOID VALVE TEST" in "ACTIVE TEST" mode with CONSULT.

OR

Refer to "Electrical Components Inspection". (See page EF & EC-180.)

N.G. → Repair or replace P.R.V.R. control solenoid valve.

O.K. ↓

INSPECTION END

Diagnostic Procedure 45

V.T.C. SOLENOID VALVE

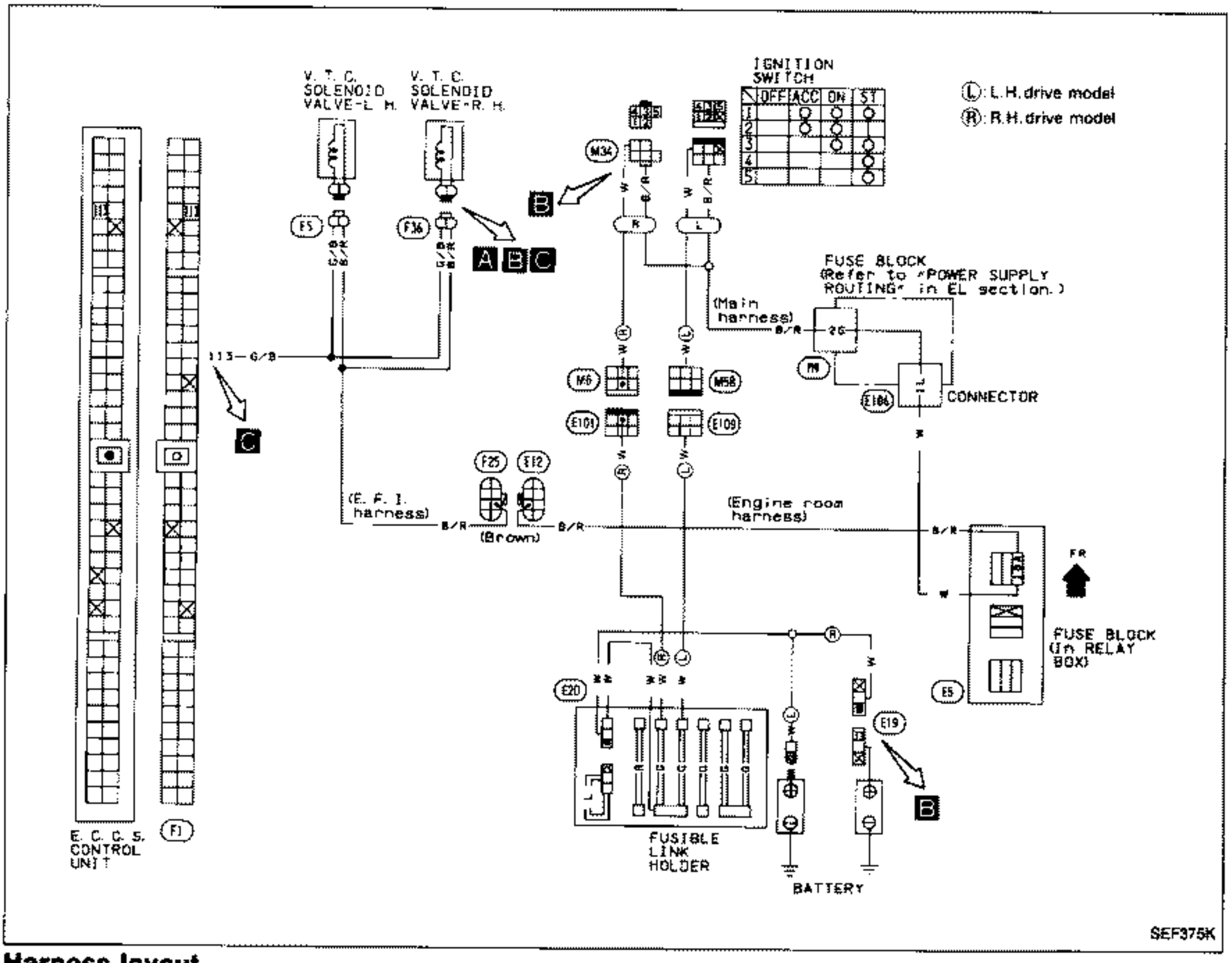

Harness layout

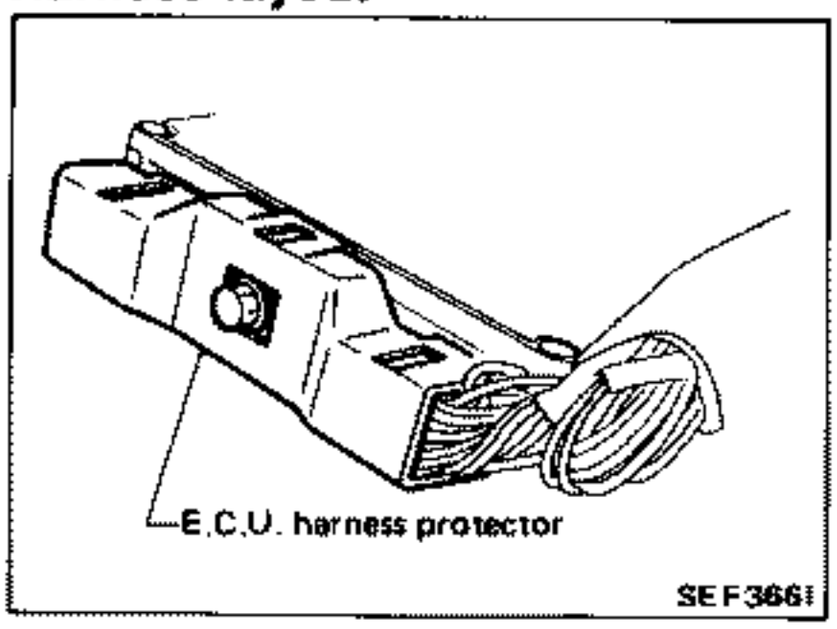

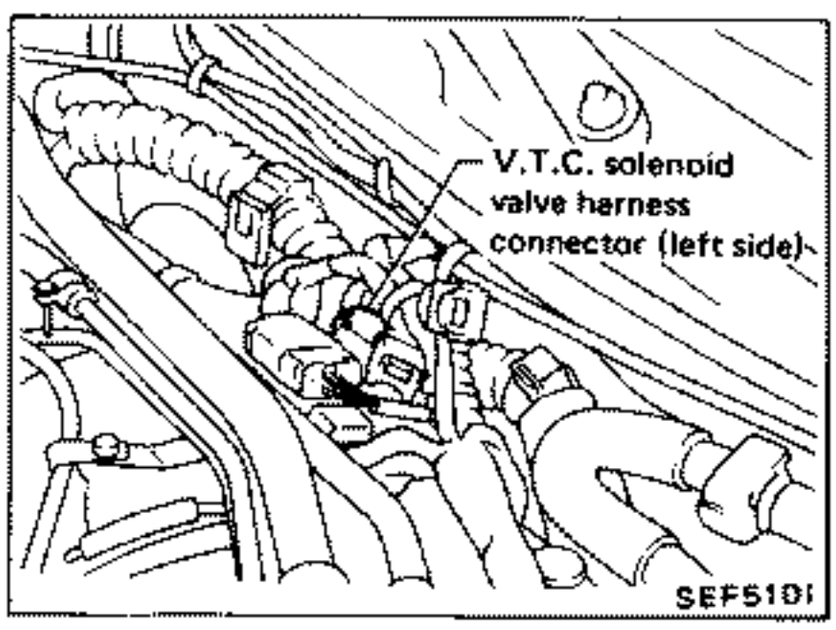

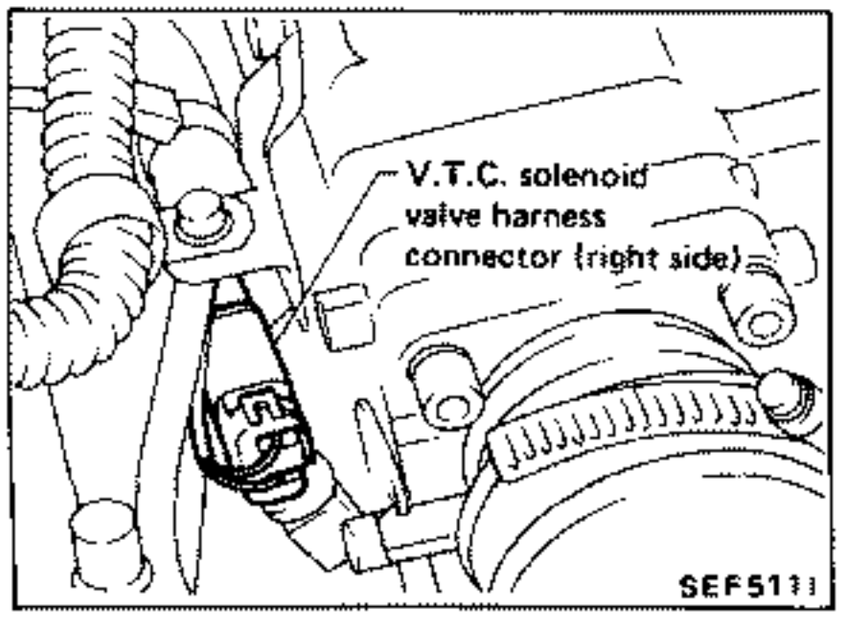

Diagnostic Procedure 45 (Cont'd)

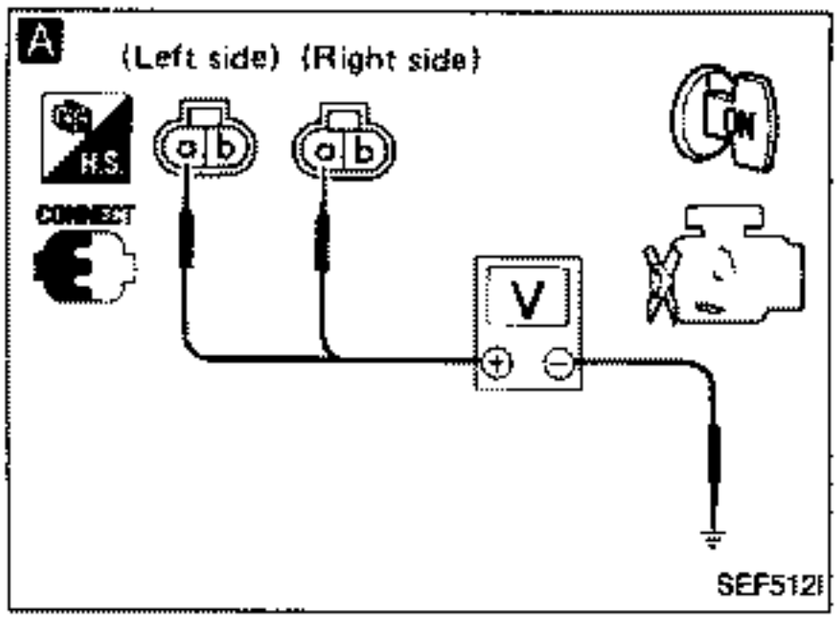

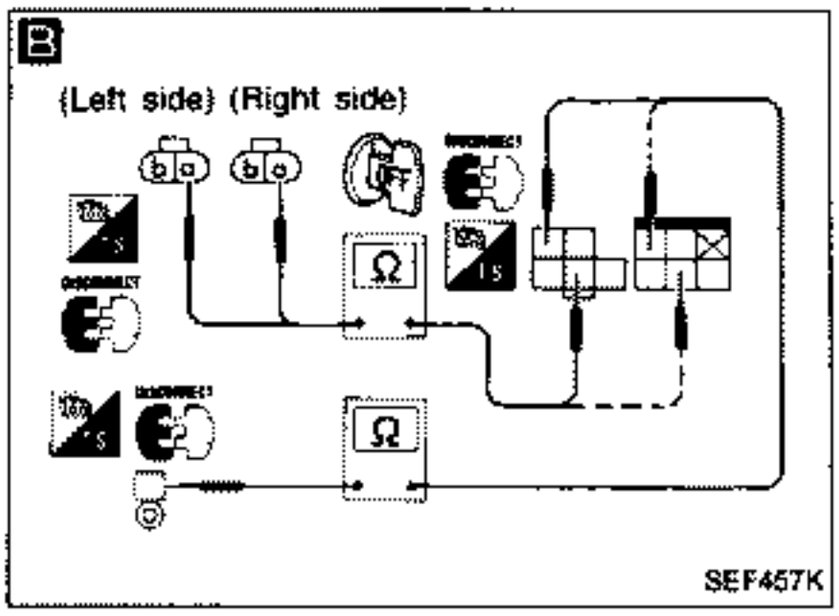

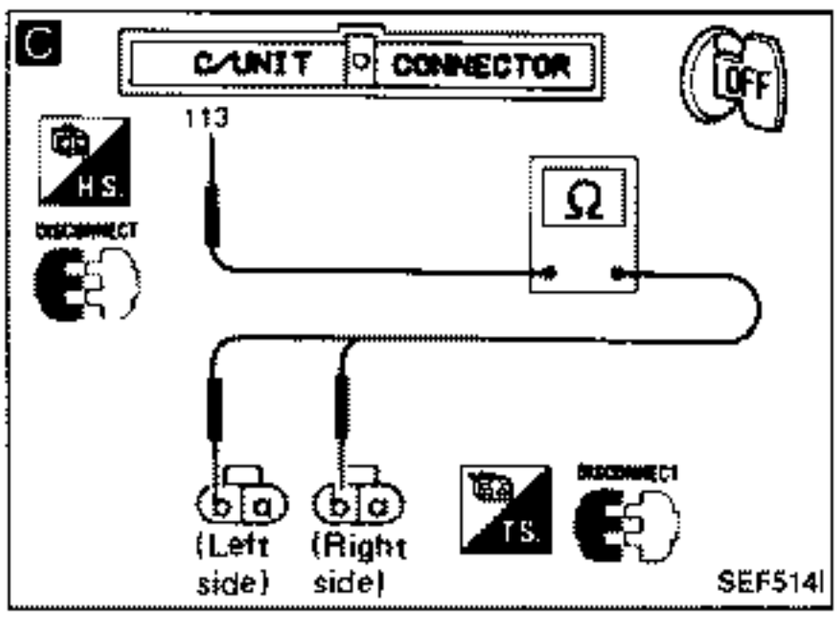

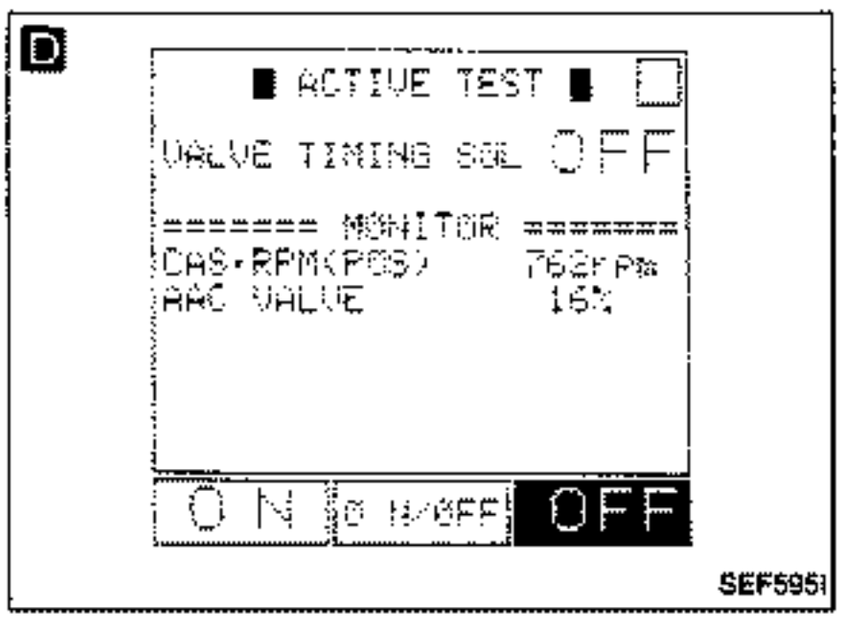

INSPECTION START

A

CHECK POWER SUPPLY.
1) Turn ignition switch "ON".
2) Check voltage between V.T.C. solenoid valve terminal ⓐ and ground.
Voltage: Battery voltage

N.G. →

B

Check the following items.
1) "G" fusible link
2) "10A" fuses
3) Ignition switch
4) Harness continuity between terminals:
- V.T.C. solenoid valve and ignition switch
- Ignition switch and battery ⊕ terminal.

Continuity should exist.

O.K. ↓

C

CHECK HARNESS CONTINUITY BETWEEN V.T.C. SOLENOID VALVE AND E.C.U.
Check harness continuity between V.T.C. solenoid valve terminal ⓑ and E.C.U. terminal (113)
Continuity should exist.

N.G. → Repair or replace harness or connectors.

O.K. ↓

D

CHECK COMPONENT (V.T.C. solenoid valve).

Perform "V.T.C. SOLENOID VALVE TEST" in "ACTIVE TEST" mode with CONSULT.

OR

Refer to "Electrical Components Inspection". (See page EF & EC-183.)

N.G. → Repair or replace V.T.C. solenoid valve.

O.K. ↓

INSPECTION END

Diagnostic Procedure 46

RADIATOR FAN CONTROL

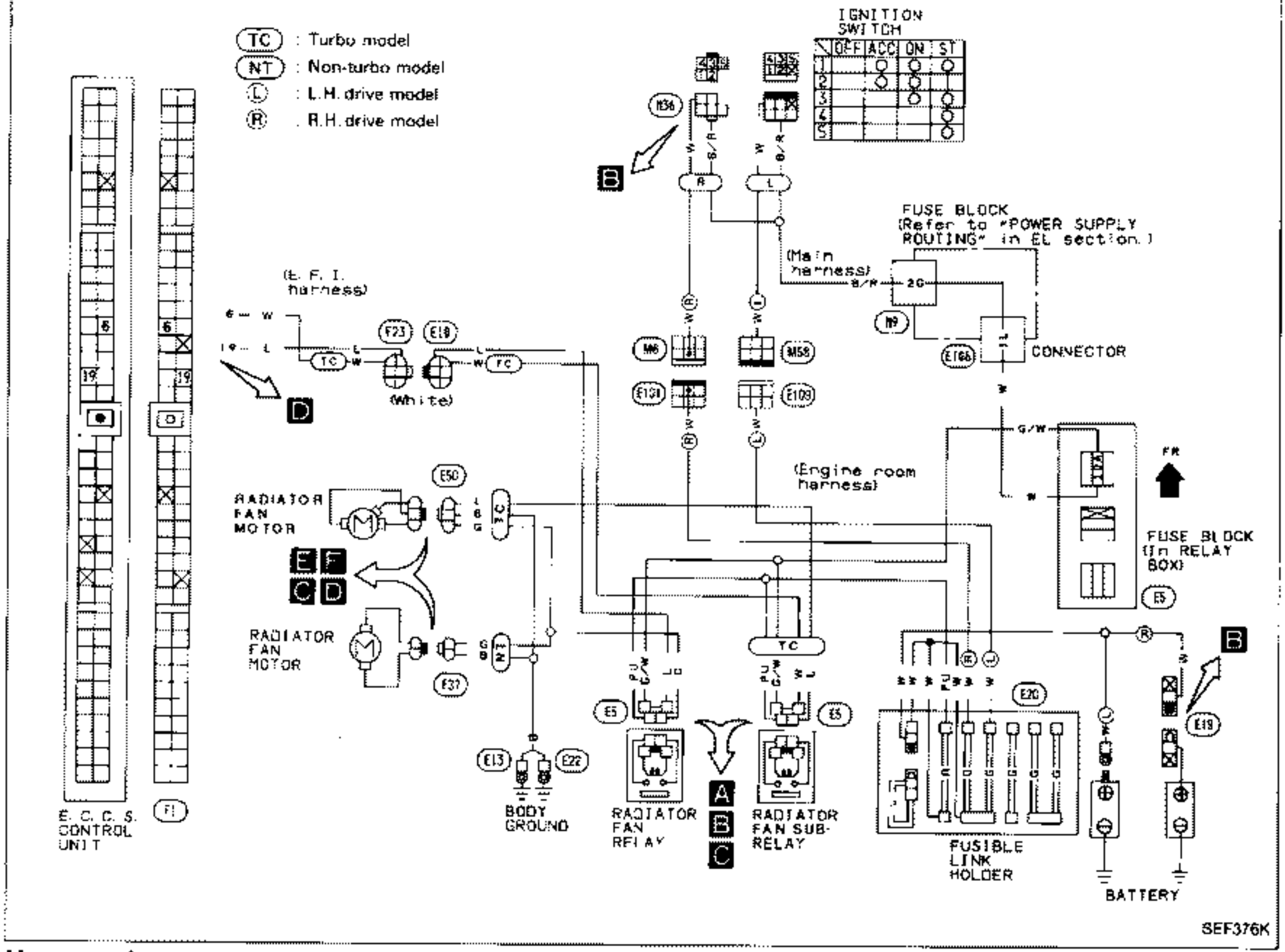

Harness layout

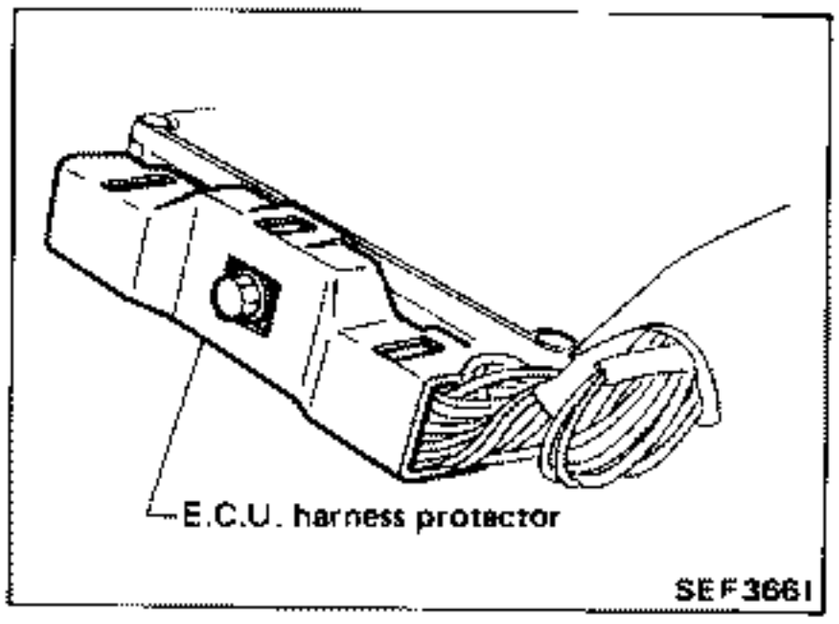

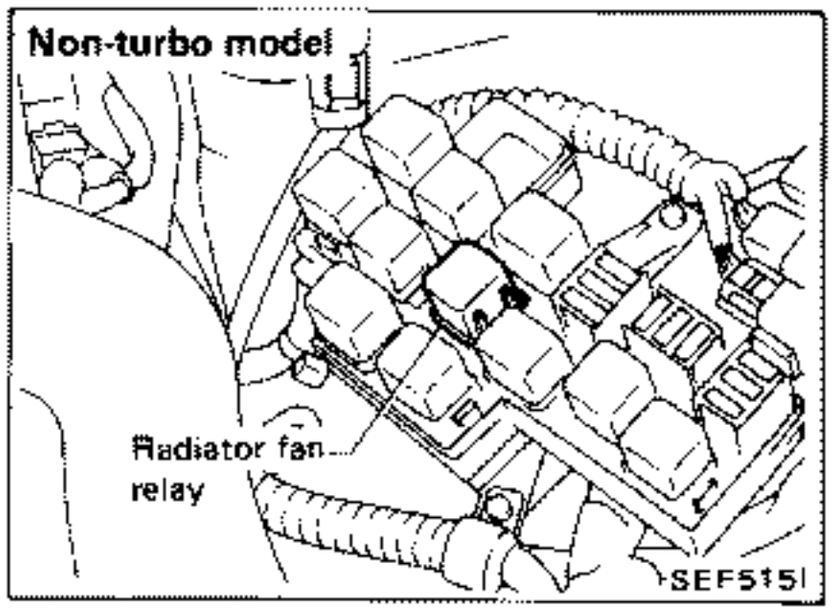

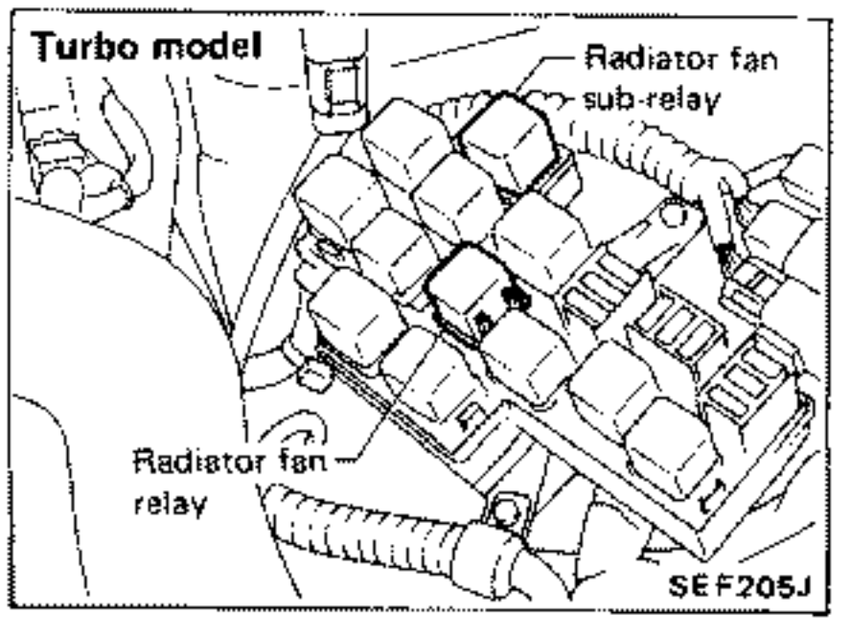

For radiator fan motor harness connector, see "HARNESS LAYOUT" in EL section.

Diagnostic Procedure 46 (Cont'd)

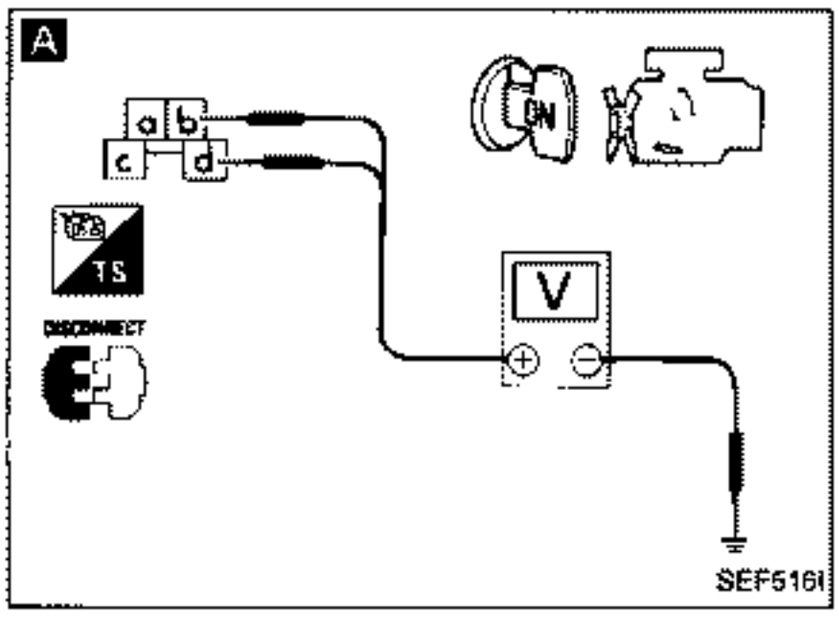

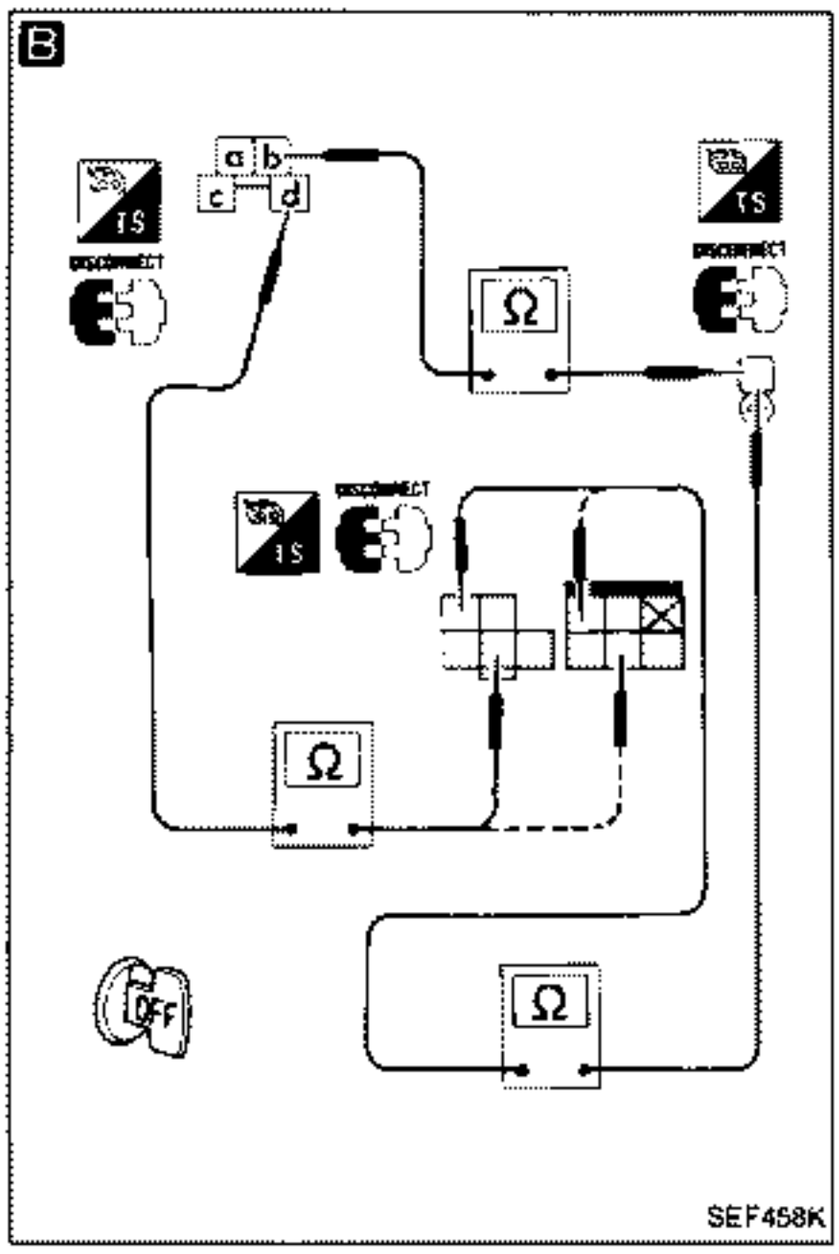

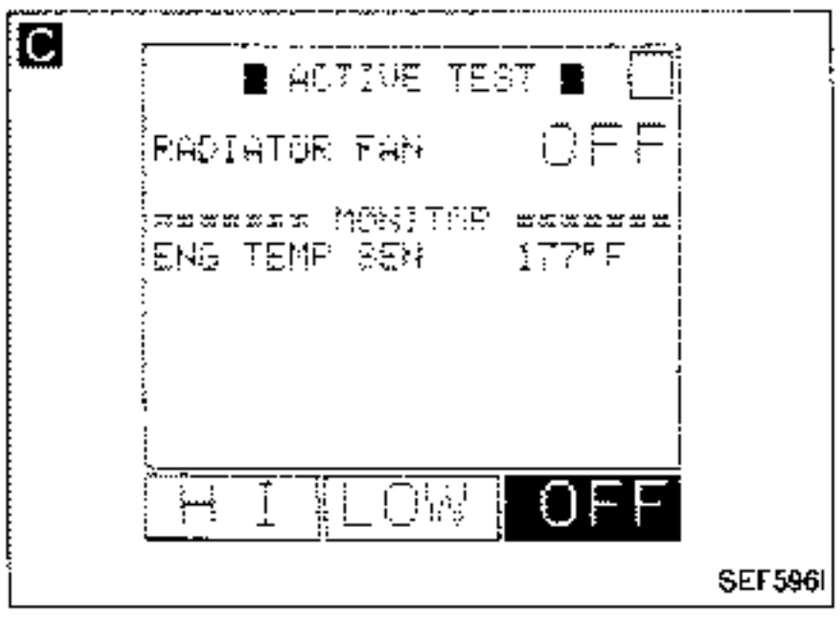

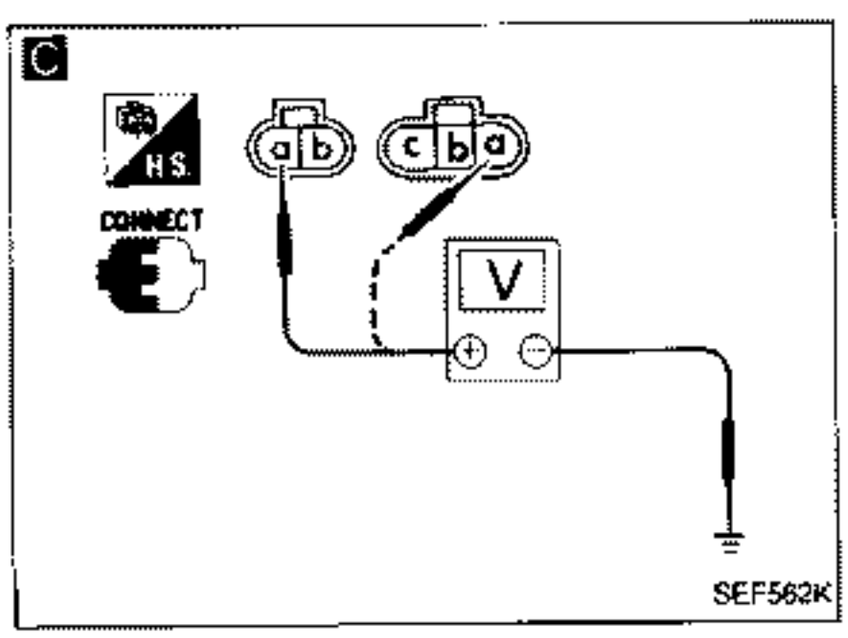

INSPECTION START

A

CHECK POWER SUPPLY (1).
1) Turn ignition switch "ON".
2) Check voltage between radiator fan relay terminals ⓑ, ⓓ and ground.
Voltage: Battery voltage

N.G. → **B**

Check the following items.
1) "G", "R" and "L" fusible links.
2) "10A" fuses
3) Ignition switch
4) Harness continuity between
- radiator fan relay terminal ⓑ and battery ⊕ terminal
- radiator fan relay terminal ⓓ and ignition switch
- ignition switch and battery ⊕ terminal

Continuity should exist.

O.K. ↓

C

CHECK POWER SUPPLY (2).
1) Turn radiator fan relay "ON" in "ACTIVE TEST" mode with CONSULT.
2) Check voltage between radiator fan motor terminal ⓐ and ground.
Voltage: Battery voltage

N.G. → **D**

Check the following items.
Harness continuity between
- radiator fan motor and radiator fan relay
- radiator fan relay and E.C.U. terminal ⑲

O.K. ↓

CHECK COMPONENT (Radiator fan relay).
Perform "RADIATOR FAN TEST" in "ACTIVE TEST" mode with CONSULT.

— OR —

Refer to "Electrical Components Inspection". (See page EF & EC-184.)

O.K. ↓

E

CHECK GROUND CIRCUIT.
Check harness continuity between radiator fan motor terminal ⓑ and ground.
Continuity should exist.

N.G. → Repair or replace harness or connectors.

O.K. ↓

⊕

Diagnostic Procedure 46 (Cont'd)

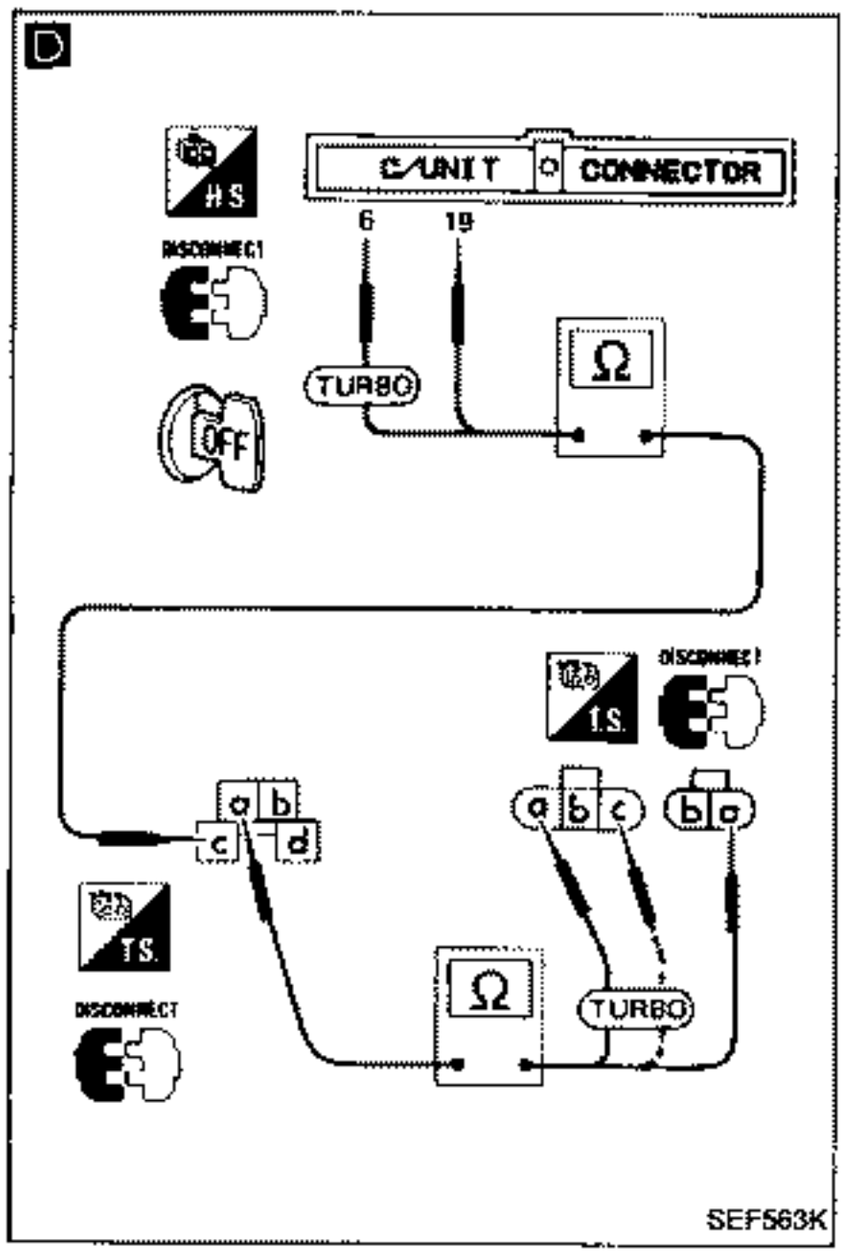

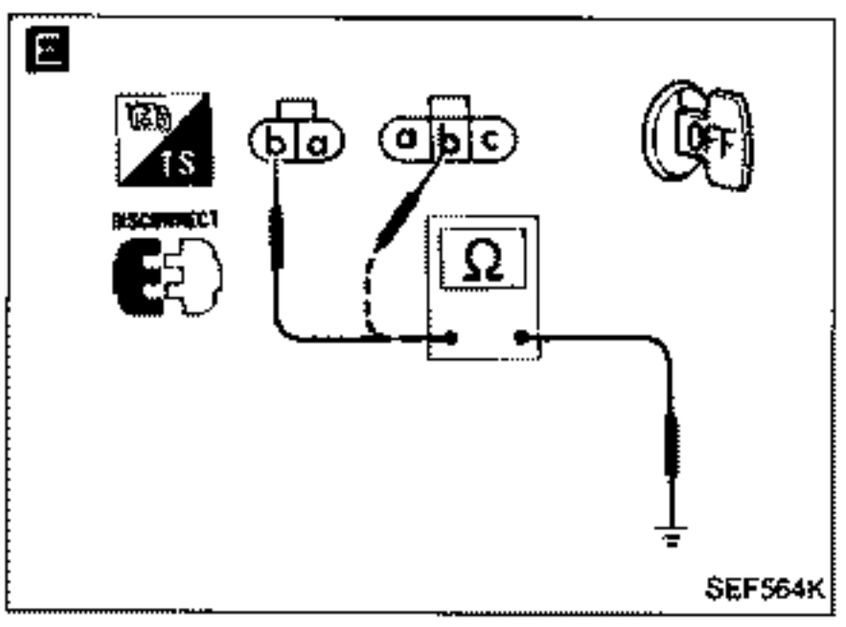

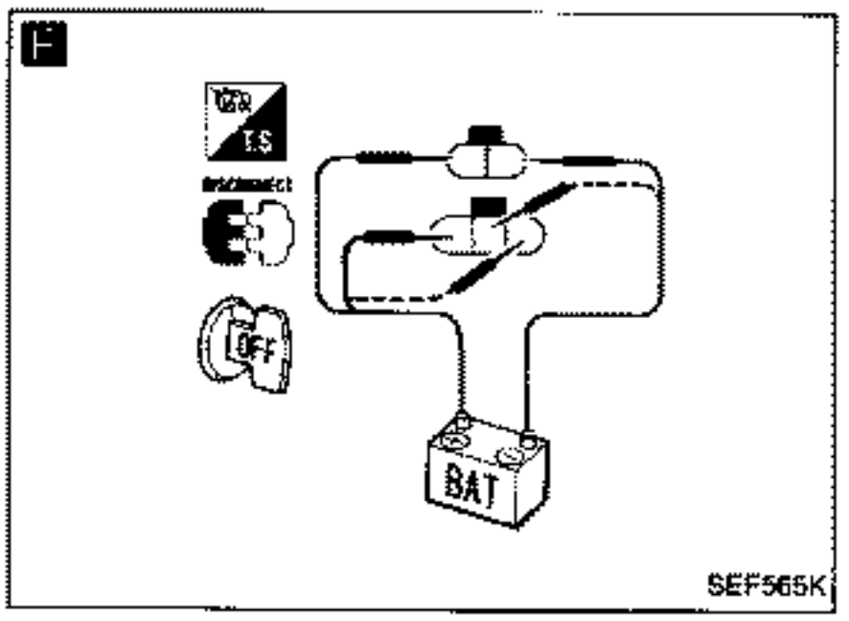

F

CHECK RADIATOR FAN MOTOR.
Supply radiator fan motor terminals with battery voltage and check operation.
Radiator fan motor should operate.

N.G. → Repair or replace radiator fan motor.

O.K. ↓

INSPECTION END

NOTE

Diagnostic Procedure 47

WASTEGATE VALVE CONTROL SOLENOID VALVE

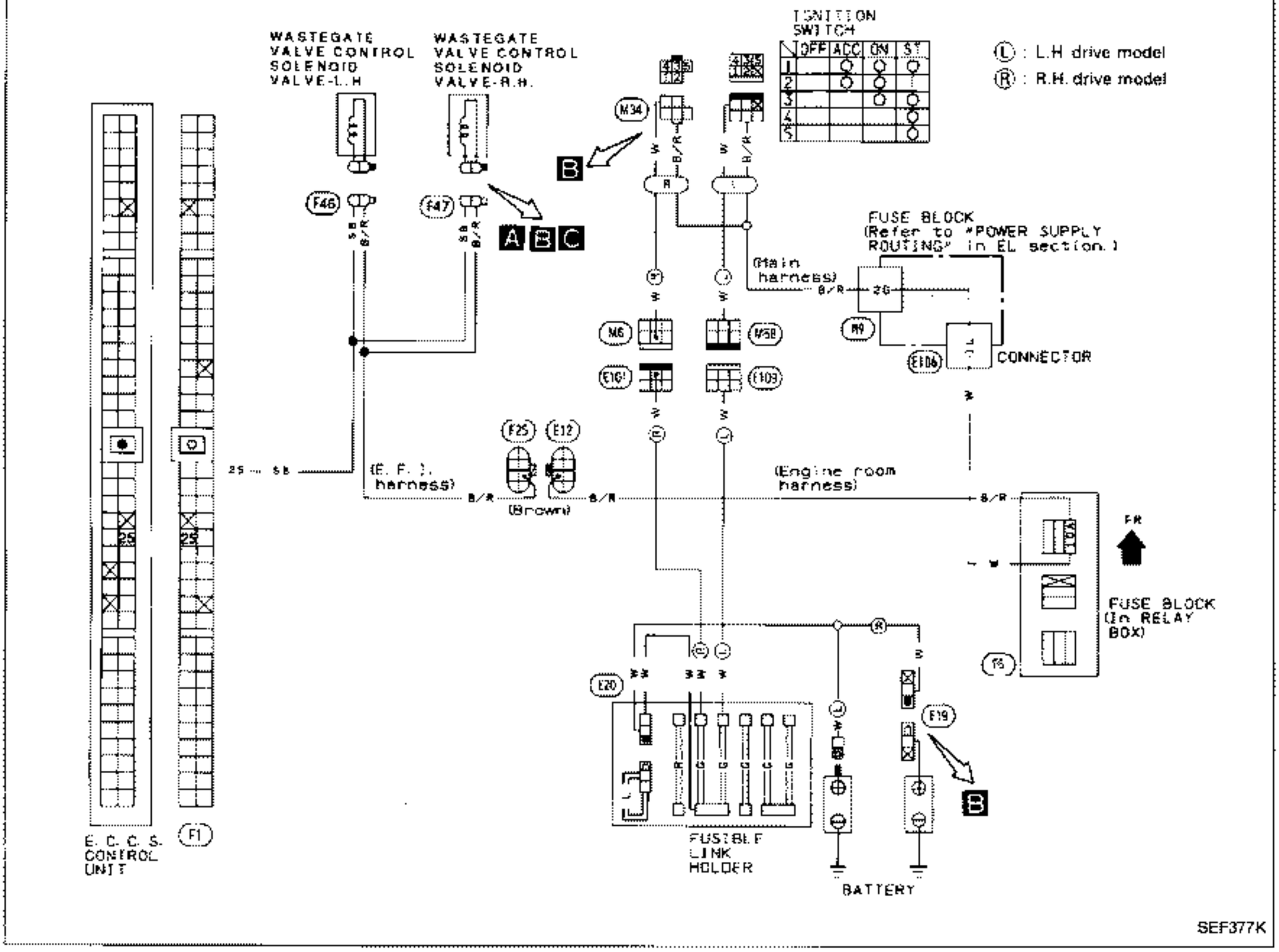

Harness layout

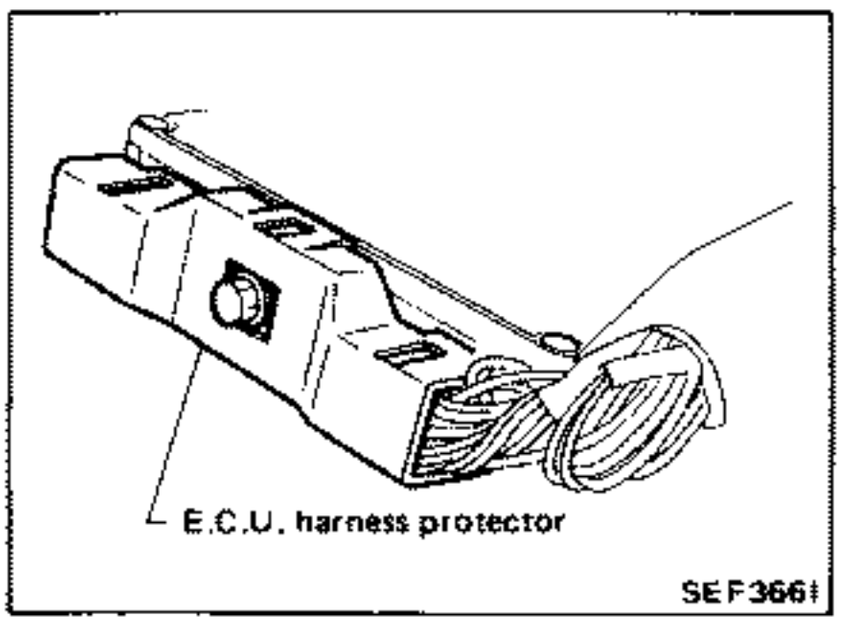

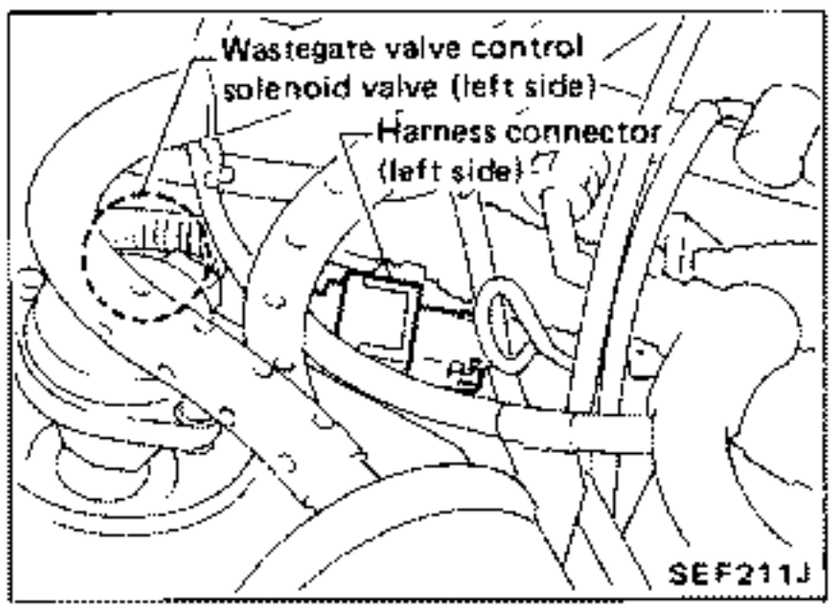

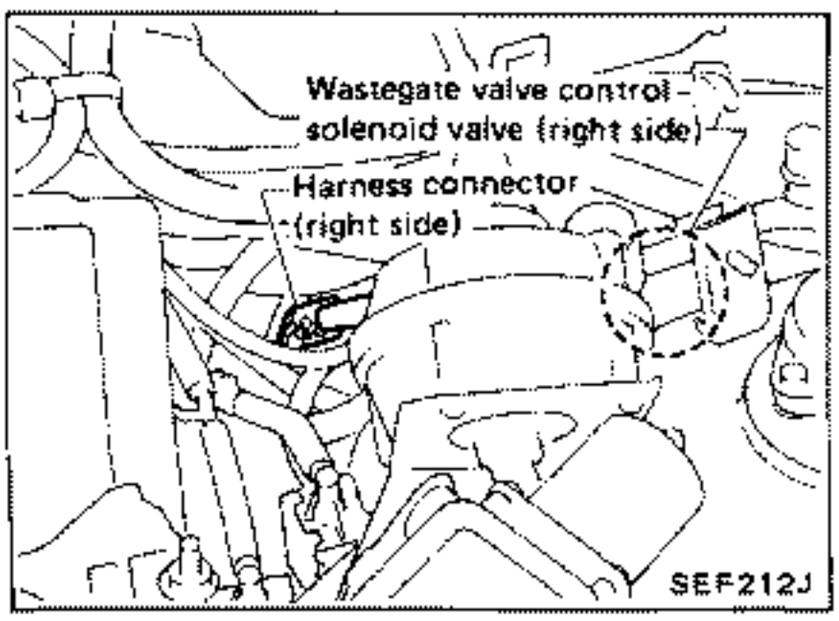

Diagnostic Procedure 47 (Cont'd)

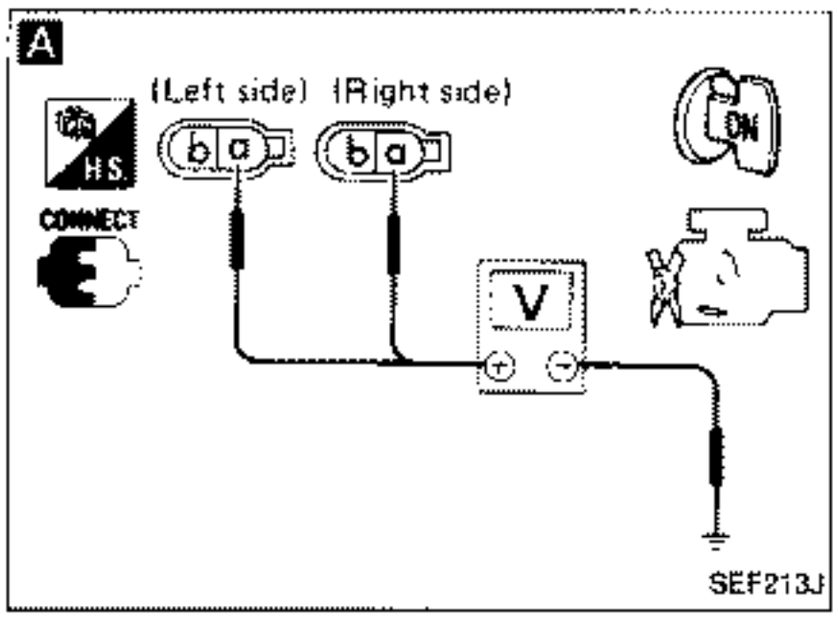

INSPECTION START

A

CHECK POWER SUPPLY.
1) Turn ignition switch "ON".
2) Check voltage between wastegate valve control solenoid valve terminal ⓓ and ground.
Voltage: Battery voltage

N.G. →

B

Check the following items.
1) "G" fusible link
2) "10A" fuses
3) Ignition switch
4) Harness continuity between terminals:
- Wastegate valve control solenoid valve and ignition switch
- Ignition switch and battery ⊕ terminal.

Continuity should exist.

O.K. ↓

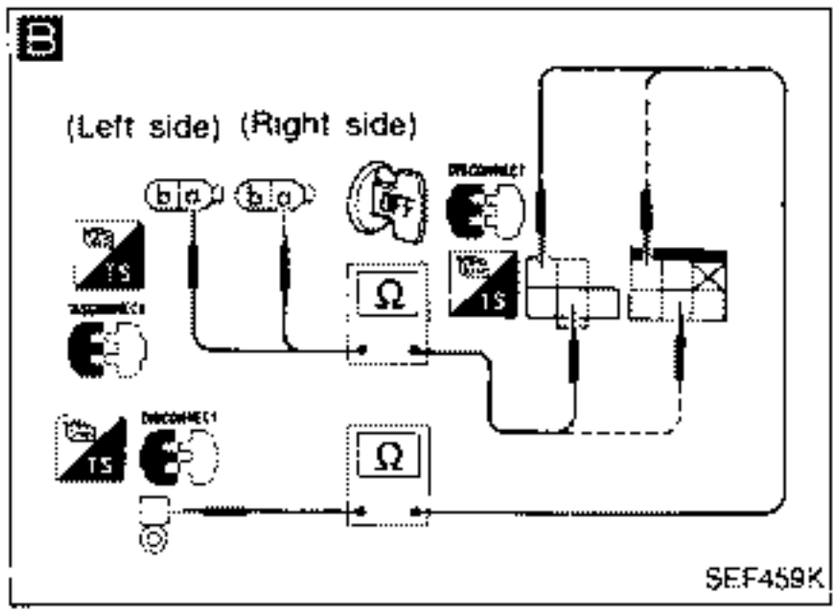

C

CHECK HARNESS CONTINUITY BETWEEN WASTEGATE VALVE CONTROL SOLENOID VALVE AND E.C.U.
Check harness continuity between wastegate valve control solenoid valve terminal ⓑ and E.C.U. terminal ㉕.
Continuity should exist.

N.G. →

Repair or replace harness or connectors.

O.K. ↓

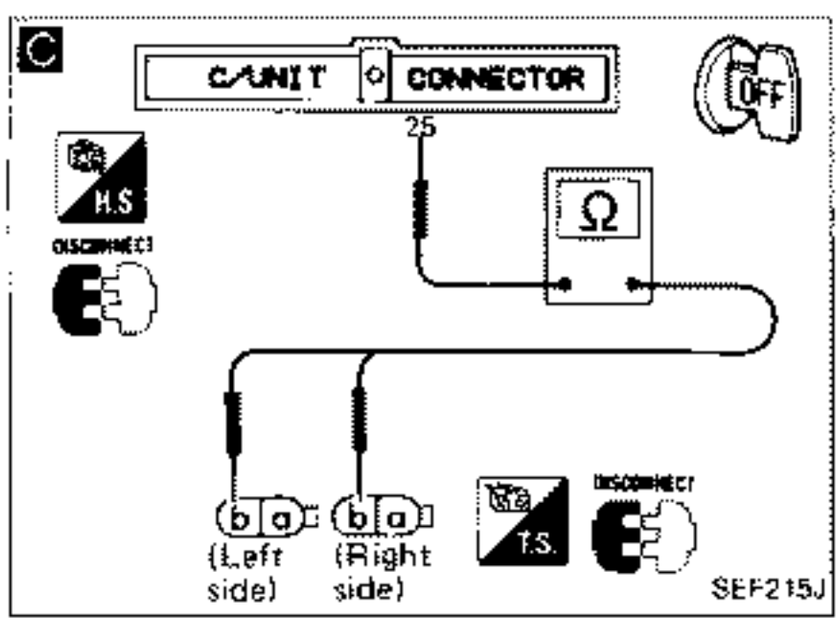

CHECK COMPONENT
(Wastegate valve control solenoid valve).
Refer to "Electrical Components Inspection".
(See page EF & EC-180.)

N.G. →

Repair or replace wastegate valve control solenoid valve.

O.K. ↓

INSPECTION END

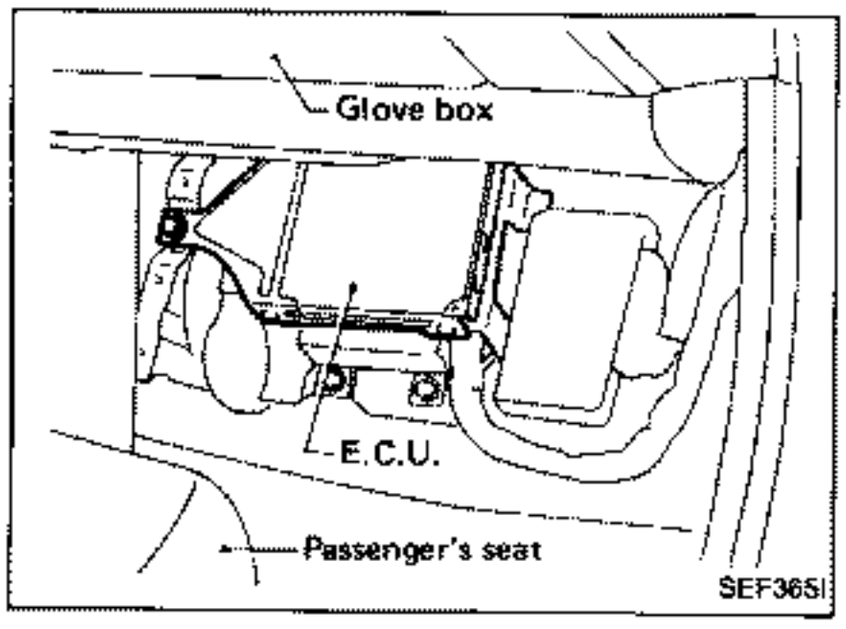

Electrical Components Inspection

E.C.U. INPUT/OUTPUT SIGNAL INSPECTION

1. E.C.U. is located behind front passenger side floor board. For this inspection, remove the front passenger side floor board.

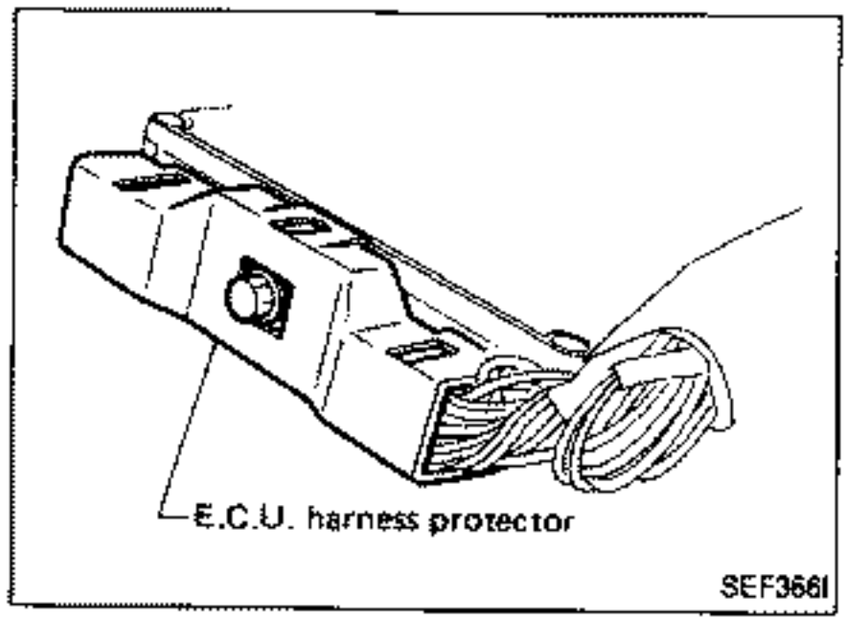

2. Remove E.C.U. harness protector.

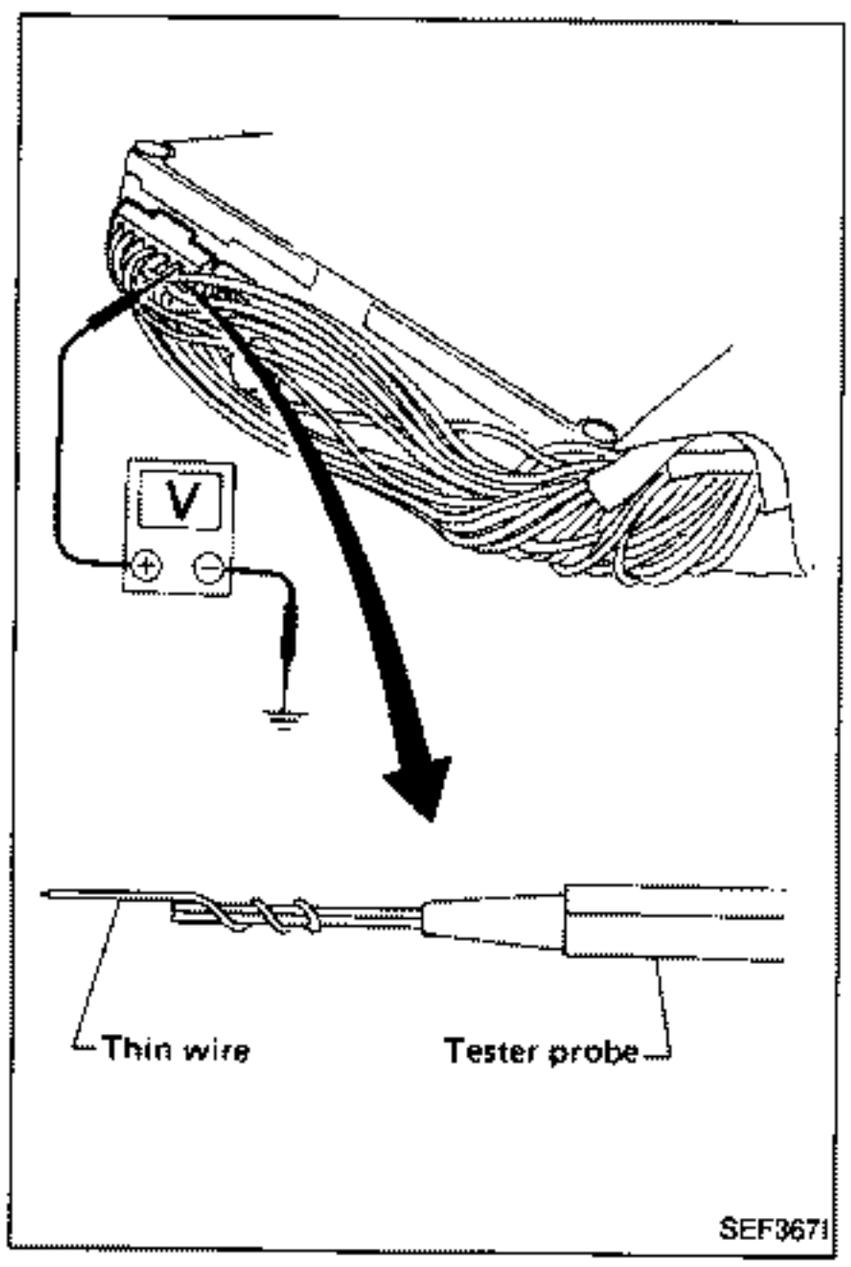

3. Perform all voltage measurements with the connectors connected.
Extend tester probe as shown to perform tests easily.

Electrical Components Inspection (Cont'd)

E.C.U. inspection table

*Data are reference values.

TER-MINAL NO.	ITEM	CONDITION	*DATA
1 2 3	Ignition signal	Engine is running. └Idle speed	Approx. 0.1V
11 12 13		Engine is running. └Engine speed is 2,000 rpm.	Approx. 0.14V
4	A.A.C. valve	Engine is running. └Racing condition	Voltage briefly decreases from battery voltage (11 - 14V).
6	Radiator fan sub-relay (Turbo model)	Engine is running. └Radiator fan is not operating.	BATTERY VOLTAGE (11 - 14V)
		Engine is running. └Radiator fan is operating.	0.1 - 0.3V
7	Tachometer	Engine is running. └Idle speed	Approx. 0.7V
		Engine is running. └Engine speed is 2,000 rpm.	Approx. 1.2V
8	A.I.V. control solenoid valve	Engine is running. └Idle speed	Approx. 0V
		Engine is running. └Engine speed is 2,000 rpm.	BATTERY VOLTAGE (11 - 14V)
9	Air conditioner relay	Engine is running. └Air conditioner switch "OFF"	BATTERY VOLTAGE (11 - 14V)
		Engine is running. └Air conditioner switch "ON"	Approx. 0V
16	E.C.U. power source (Self-shutoff)	Engine is running. └Idle speed	0.8 - 1.0V
		Engine is not running. └For a few seconds after turning ignition switch "OFF"	BATTERY VOLTAGE (11 - 14V)

Electrical Components Inspection (Cont'd)

*Data are reference values.

TER-MINAL NO.	ITEM	CONDITION	*DATA
18	Fuel pump relay	Ignition switch "ON" └For 5 seconds after turning ignition switch "ON"	0.7 - 0.9V
		Ignition switch "ON" └In 5 seconds after turning ignition switch "ON"	BATTERY VOLTAGE (11 - 14V)
19	Radiator fan relay	Engine is running. └Radiator fan is not operating.	BATTERY VOLTAGE (11 - 14V)
		Engine is running. └Radiator fan is operating.	0.1 - 0.3V
23	Detonation sensor	Engine is running. └Idle speed	Approx. 2.5V
25	Wastegate valve control solenoid valves (Turbo model)	Ignition switch "ON" Engine is running.	BATTERY VOLTAGE (11 - 14V)
		Engine is racing. └Engine speed is up to 2,000 rpm	Approx. 0.2V
27	Air flow meter	Engine is running. (Warm-up condition) └Idle speed	0.8 - 1.5V
		Engine is running. (Warm-up condition) └Engine speed is 2,000 rpm.	1.0 - 1.6V
28	Engine temperature sensor	Engine is running.	0 - 5.0V Output voltage varies with engine temperature.
29 55	Right side exhaust gas sensor Left side exhaust gas sensor	Engine is running. └After warming up sufficiently and engine speed is 2,000 rpm.	0 ↔ Approx. 1.0V
33	F.I.C.D. solenoid valve	Engine is running. └A/C compressor is not operating.	BATTERY VOLTAGE (11 - 14V)
		Engine is running. └A/C compressor is operating.	0.7 - 0.8V

Z.ONE.DATSUN

Electrical Components Inspection (Cont'd)

*Data are reference values.

TER-MINAL NO.	ITEM	CONDITION	*DATA
34	Power steering oil pressure switch	Engine is running. └Steering wheel is in the "straight ahead" position.	8.0 - 9.0V
		Engine is running. └Steering wheel is turned.	Approx. 0V
36	Fuel temperature sensor	Engine is running.	0 - 5.0V Output voltage varies with fuel temperature.
38	Throttle sensor	Ignition switch "ON"	0.4 - 4.0V Output voltage varies with throttle valve opening angle.
41 51	Crank angle sensor (Reference signal)	Engine is running. **Do not run engine at high speed under no-load.**	1.2 - 1.4V Output voltage varies slightly with engine speed.
42 52	Crank angle sensor (Position signal)	Engine is running. **Do not run engine at high speed under no-load.**	2.5 - 2.7V Output voltage varies slightly with engine speed.
43	Start signal	Ignition switch "ON"	Approx. 0V
		Ignition switch "START"	BATTERY VOLTAGE (11 - 14V)
44	Neutral switch (M/T model) A/T control unit (A/T model)	Ignition switch "ON" ┌Gear position is "Neutral" (M/T model). └Gear position is "N" or "P" (A/T model).	Approx. 0V
		Ignition switch "ON" └Except the above conditions	8.0 - 9.0V
45	Ignition switch	Ignition switch "ON" └Engine stopped	BATTERY VOLTAGE (11 - 14V)
46	Air conditioner switch	Engine is running. └Air conditioner switch "OFF"	BATTERY VOLTAGE (11 - 14V)
		Engine is running. └Air conditioner switch "ON"	0.5 - 0.7V

Electrical Components Inspection (Cont'd)

*Data are reference values.

TER-MINAL NO.	ITEM	CONDITION	*DATA
48	Power source for sensors	Ignition switch "ON" └Engine stopped	Approximately 5.0V
49	Battery source	Ignition switch "ON" └Engine stopped	BATTERY VOLTAGE (11 - 14V)
54	Throttle valve switch (Idle position)	Ignition switch "ON" └Accelerator pedal is fully released (engine running).	9.0 - 10.0V
		Ignition switch "ON" └Accelerator pedal is depressed (engine running).	0V
57	Power source for throttle valve switch	Ignition switch "ON" └Engine running	BATTERY VOLTAGE (11 - 14V)
59	Power supply	Ignition switch "ON" └Engine running	BATTERY VOLTAGE (11 - 14V)
101 103 105 110 112 114	Injectors	Ignition switch "OFF"	BATTERY VOLTAGE (11 - 14V)
102	E.G.R. control solenoid valve	Engine is running. (Warm-up condition) └Idle speed	0.7 - 0.8V
		Engine is running. (Warm-up condition) └Engine speed is 2,000 rpm.	BATTERY VOLTAGE (11 - 14V)
35 104	Fuel pump voltage control (35: Turbo model)	Ignition switch "ON" └Engine stopped	BATTERY VOLTAGE (11 - 14V)
		Engine is running. (Warm-up condition) └Idle speed	Approx. 0V
111	P.R.V.R. control solenoid valve	Stop and restart engine after warming it up. └Fuel temperature is above 75°C (167°F)	0 - 1.0V (for 30 seconds after ignition switch is turned off.)
			BATTERY VOLTAGE (After 30 seconds)
		Stop and restart engine after warming it up. └Fuel temperature is below 75°C (167°F)	BATTERY VOLTAGE (11 - 14V)

Z.ONE.DATSUN

Electrical Components Inspection (Cont'd)

*Data are reference values.

TER-MINAL NO.	ITEM	CONDITION	*DATA
113	Valve timing control solenoid valves	Engine is running. └Idle speed	BATTERY VOLTAGE (11 - 14V)
		Engine is running. └Engine speed is 3,000 rpm.	0.2 - 0.5V

E.C.U. HARNESS CONNECTOR TERMINAL LAYOUT

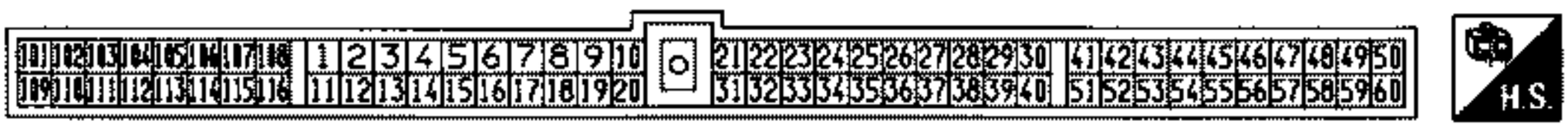

SEC250B

Electrical Components Inspection (Cont'd)

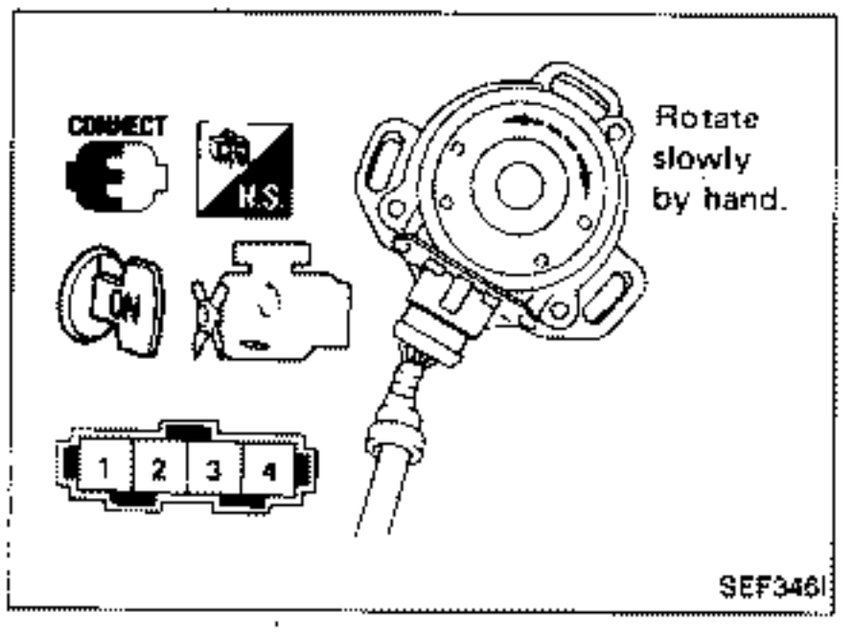

CRANK ANGLE SENSOR

1. Remove crank angle sensor from engine. (Crank angle sensor harness connector should remain connected.)
2. Turn ignition switch "ON".
3. Rotate crank angle sensor shaft slowly by hand and check voltage between terminals ①, ② and ground.

Terminal	Voltage
② (120° signal)	Voltage fluctuates between 5V and 0V.
① (1° signal)	

If N.G., replace crank angle sensor.

After this inspection, malfunction code No. 11 might be displayed though the crank angle sensor is functioning properly. In this case erase the stored memory.

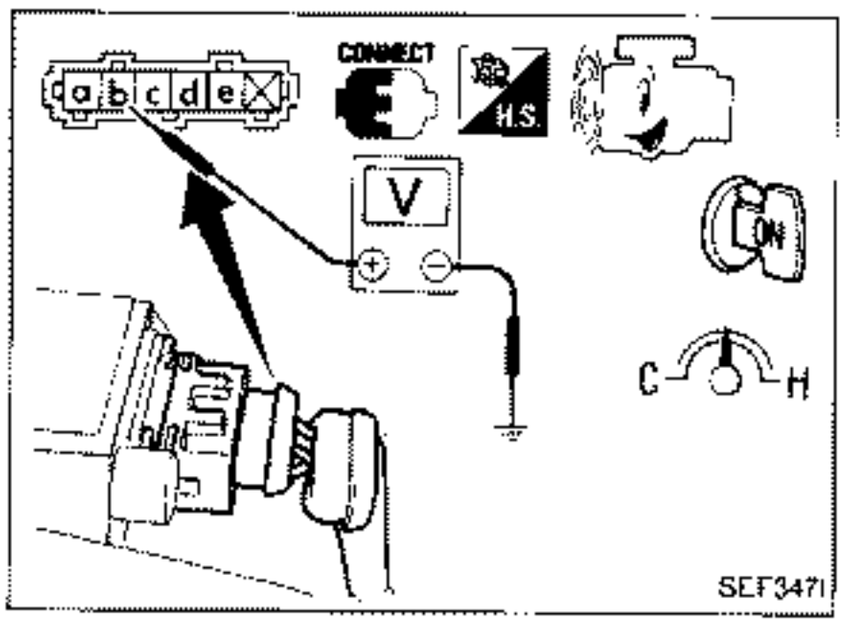

AIR FLOW METER

1. Fold back air flow meter harness connector rubber as shown in the figure if the harness connector is connected.
2. Turn ignition switch "ON".
3. Start engine and warm it up sufficiently.
4. Check voltage between terminal ⓑ and ground.

Conditions	Voltage V
Ignition switch "ON" (Engine stopped.)	Approximately 0.8
Idle (Engine is warm-up sufficiently.)	Approximately 0.8 - 1.5

5. If N.G., remove air flow meter from air duct. Check hot wire for damage or dust.

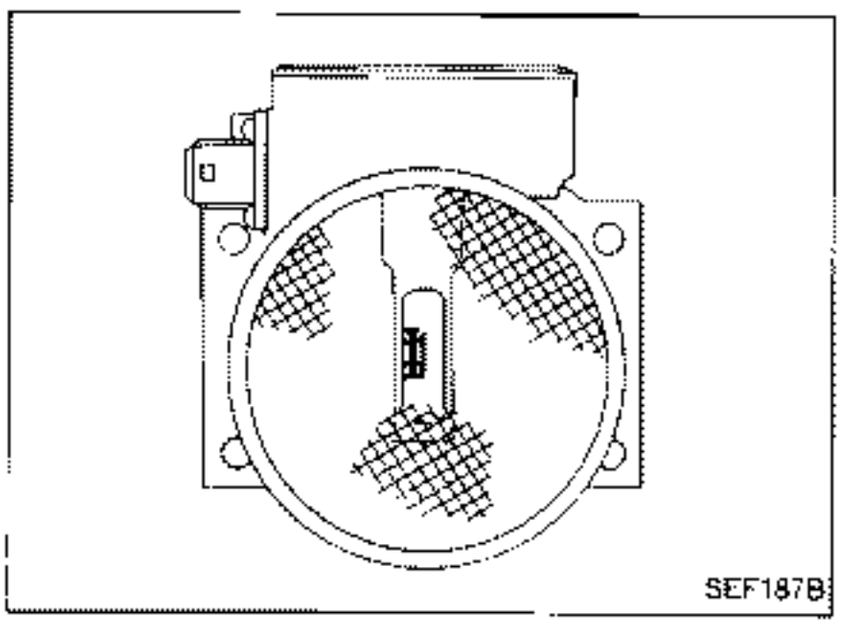

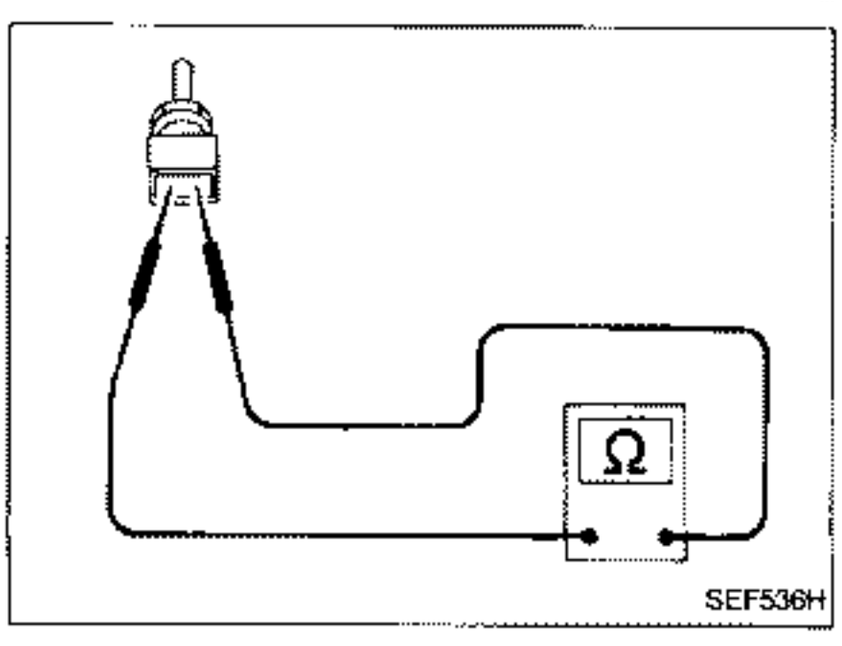

ENGINE TEMPERATURE SENSOR

1. Disconnect engine temperature sensor harness connector.
2. Check resistance as shown in the figure.

Temperature °C (°F)	Resistance kΩ
20 (68)	2.1 - 2.9
50 (122)	0.68 - 1.00
80 (176)	0.30 - 0.33

If N.G., replace engine temperature sensor.

Electrical Components Inspection (Cont'd)

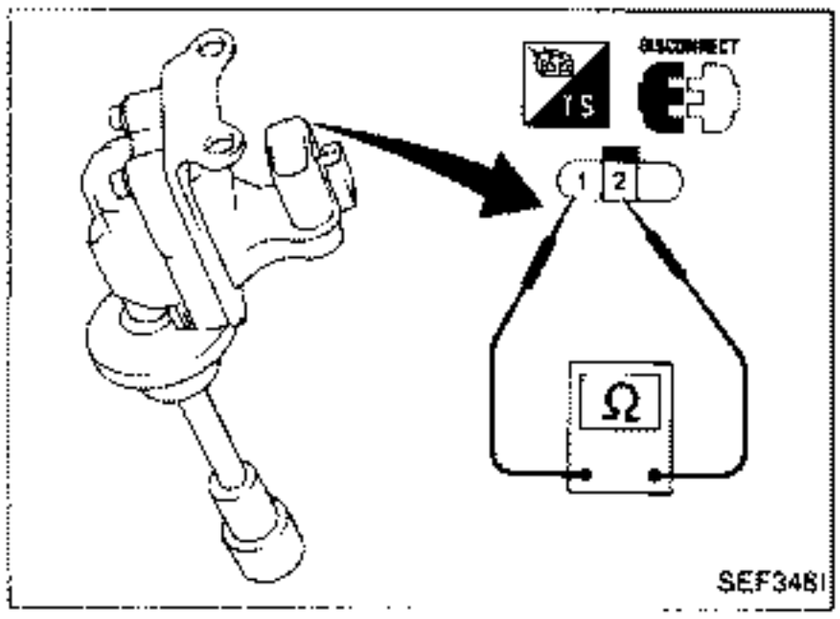

IGNITION COIL

1. Disconnect ignition coil harness connector.
2. Check resistance as shown in the figure.

Terminal	Resistance
① - ②	Approximately 0.7Ω

If N.G., replace ignition coil.

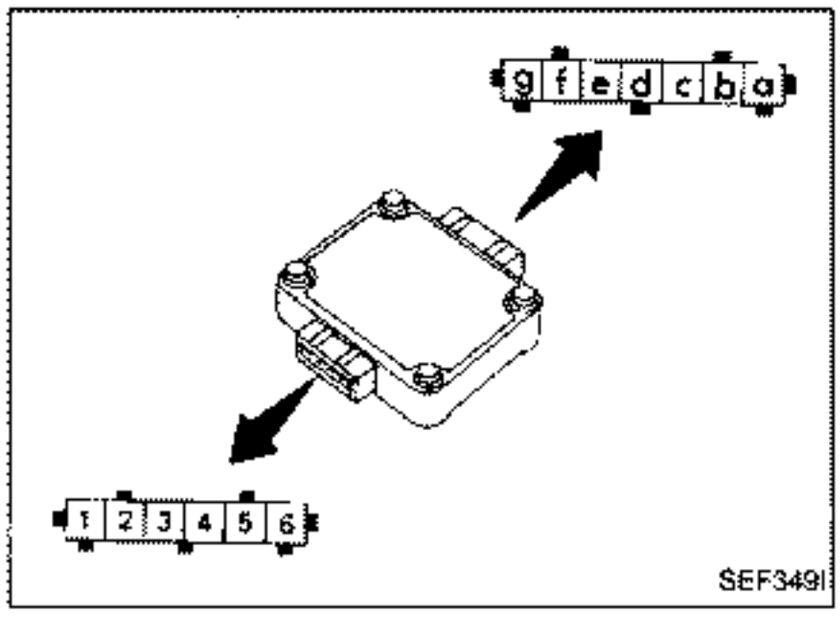

POWER TRANSISTOR

1. Disconnect power transistor harness connector.
2. Check power transistor continuity between terminals as shown in the figure.

Terminal combination						Tester polarity	Continuity	Tester polarity	Continuity
g	g	g	g	g	g	⊕	No	⊖	Yes
a	b	c	d	e	f	⊖		⊕	
g	g	g	g	g	g	⊕	Yes	⊖	Yes
1	2	3	4	5	6	⊖		⊕	
a	b	c	d	e	f	⊕	Yes	⊖	No
1	2	3	4	5	6	⊖		⊕	

If N.G., replace power transistor.

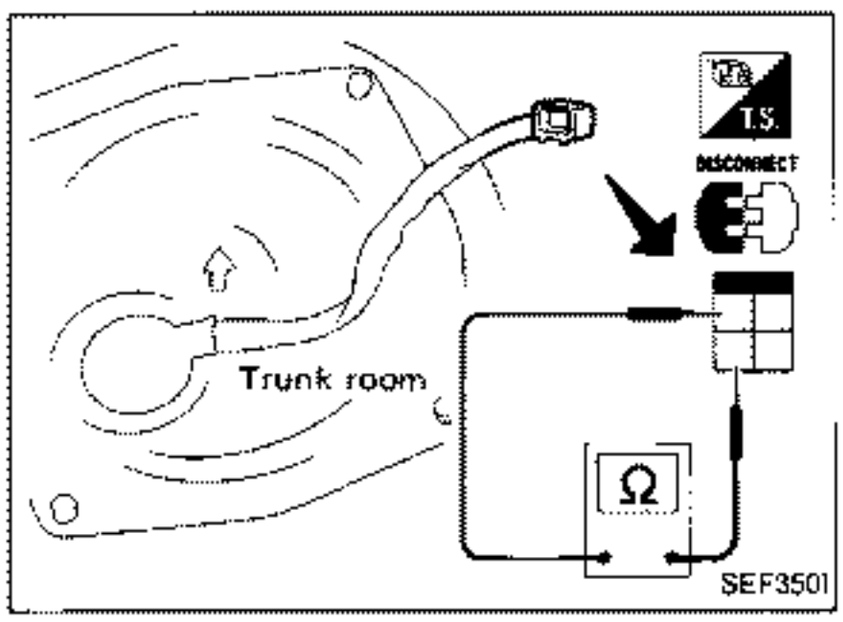

FUEL PUMP

1. Disconnect fuel pump harness connector.
2. Check resistance between terminals ⓐ and ⓒ.
   Resistance: Approximately 0.5Ω

If N.G., replace fuel pump.

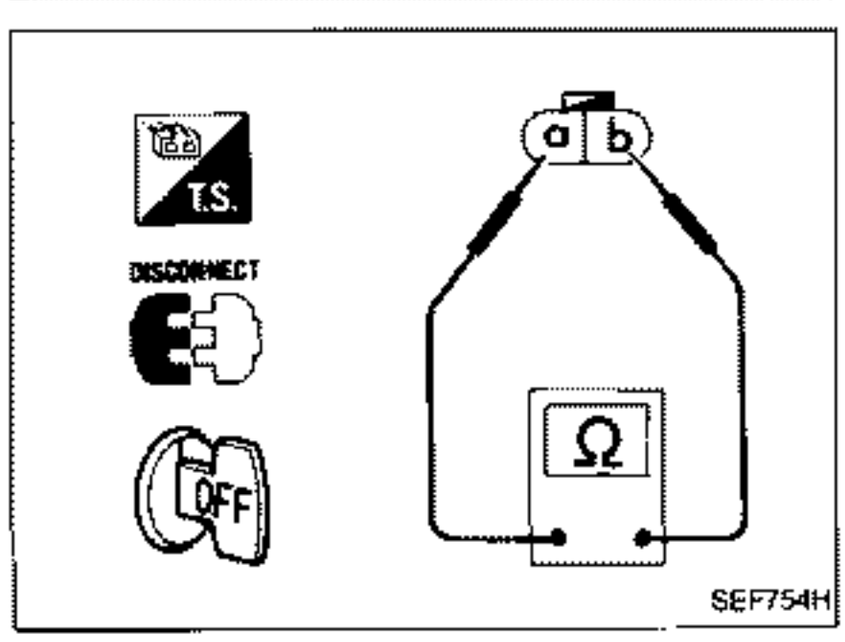

VEHICLE SPEED SENSOR

1. Jack up rear wheels. Use stands to support vehicle.
2. Disconnect vehicle speed sensor harness connector.
3. Check continuity between terminals ⓐ and ⓑ while rotating rear wheel by hand.

Continuity should come and go.

If N.G., replace vehicle speed sensor.

Electrical Components Inspection (Cont'd)

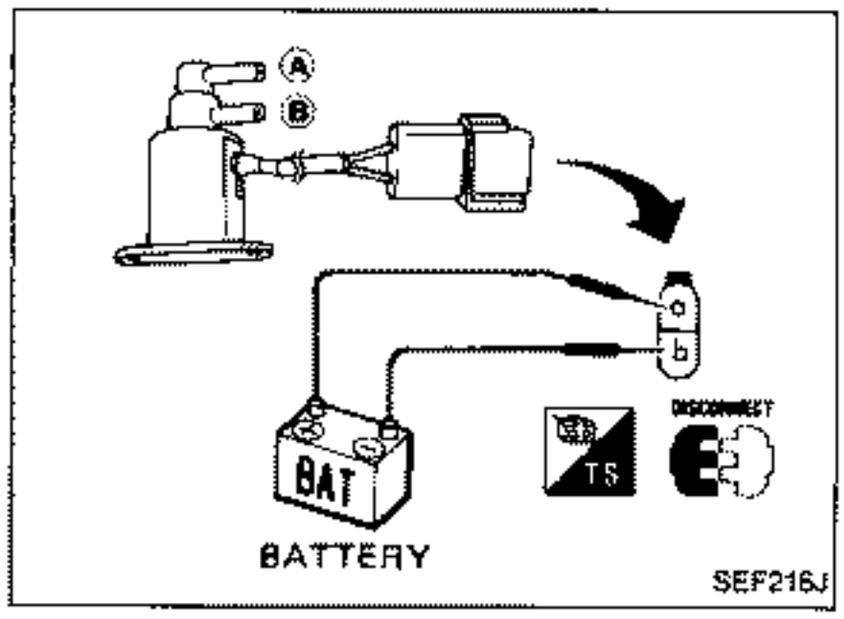

WASTEGATE VALVE CONTROL SOLENOID VALVE

Check air passage continuity.

Condition	Air passage continuity between Ⓐ and Ⓑ
12V direct current supply between terminals ⓐ and ⓑ	Yes
No supply	No

If N.G., replace solenoid valve.

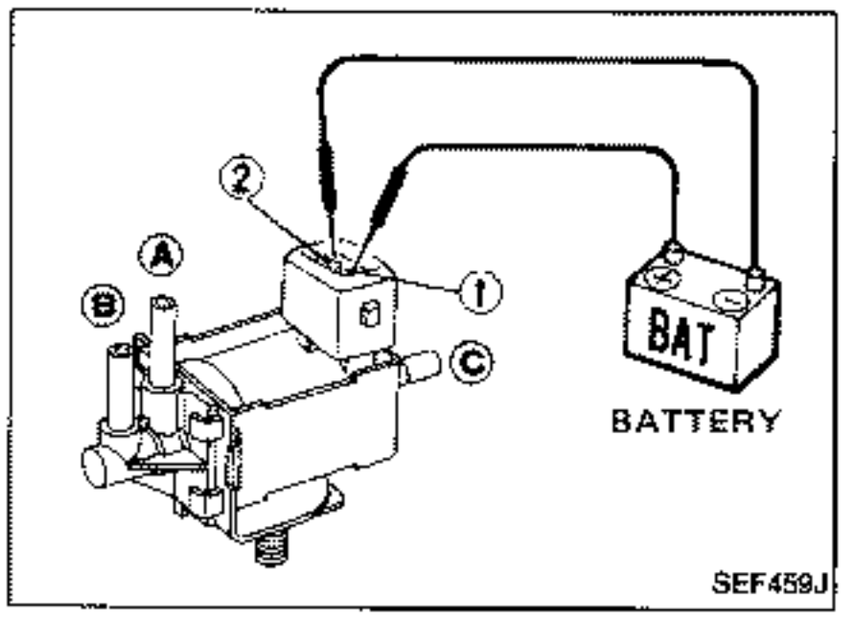

E.G.R. CONTROL SOLENOID VALVE
A.I.V. CONTROL SOLENOID VALVE
P.R.V.R. CONTROL SOLENOID VALVE

Check air passage continuity.

Condition	Air passage continuity between Ⓐ and Ⓑ	Air passage continuity between Ⓐ and Ⓒ
12V direct current supply between terminals ① and ②	Yes	No
No supply	No	Yes

If N.G., replace solenoid valve.

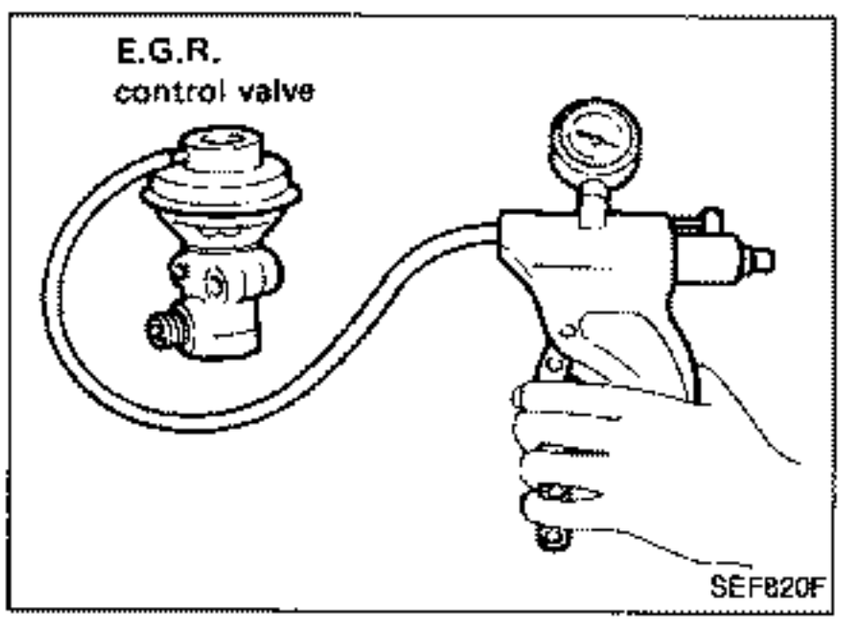

E.G.R. CONTROL VALVE

Apply vacuum to E.G.R. vacuum port with a hand vacuum pump.
E.G.R. control valve spring should lift.
If N.G., replace E.G.R. control valve.

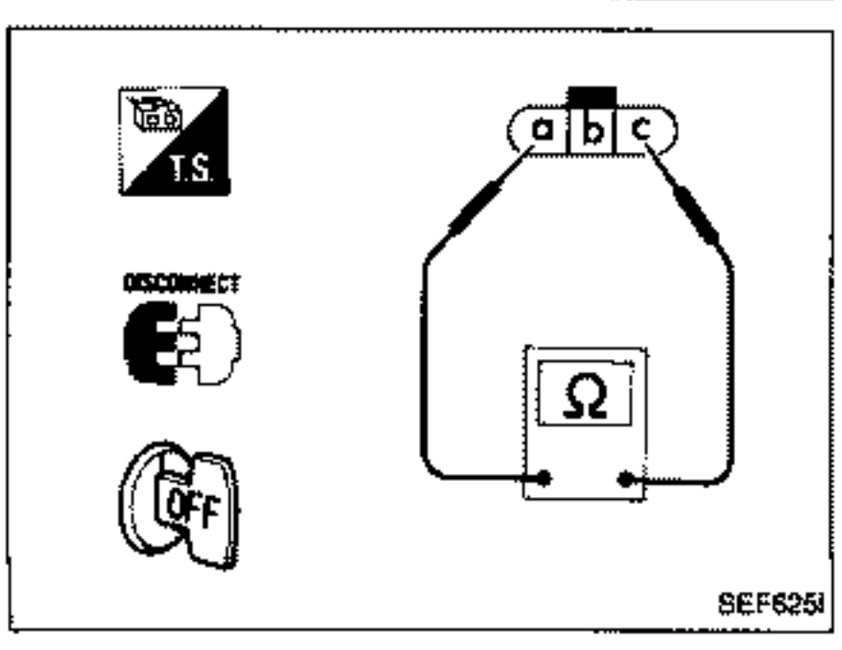

EXHAUST GAS SENSOR

Refer to "Diagnostic Procedure 30".
(See page EF & EC-128.)

EXHAUST GAS SENSOR HEATER

Check resistance between terminals ⓐ and ⓒ.
Resistance: 3 - 1,000Ω
If N.G., replace exhaust gas sensor.

Electrical Components Inspection (Cont'd)

THROTTLE SENSOR

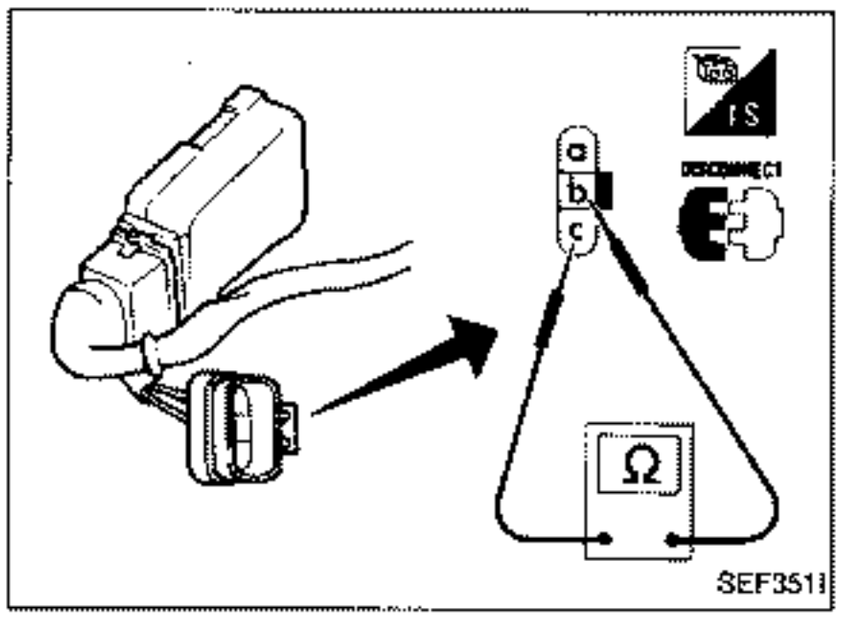

1. Disconnect throttle sensor harness connector.
2. Make sure that resistance between terminals ⓑ and ⓒ changes when opening throttle valve manually.

Accelerator pedal conditions	Resistance kΩ
Completely released	Approximately 1
Partially released	1 - 9
Completely depressed	Approximately 9

If N.G., replace throttle sensor.

Adjustment

If throttle sensor is replaced or removed, it is necessary to install it in the proper position, by following the procedure as shown below:

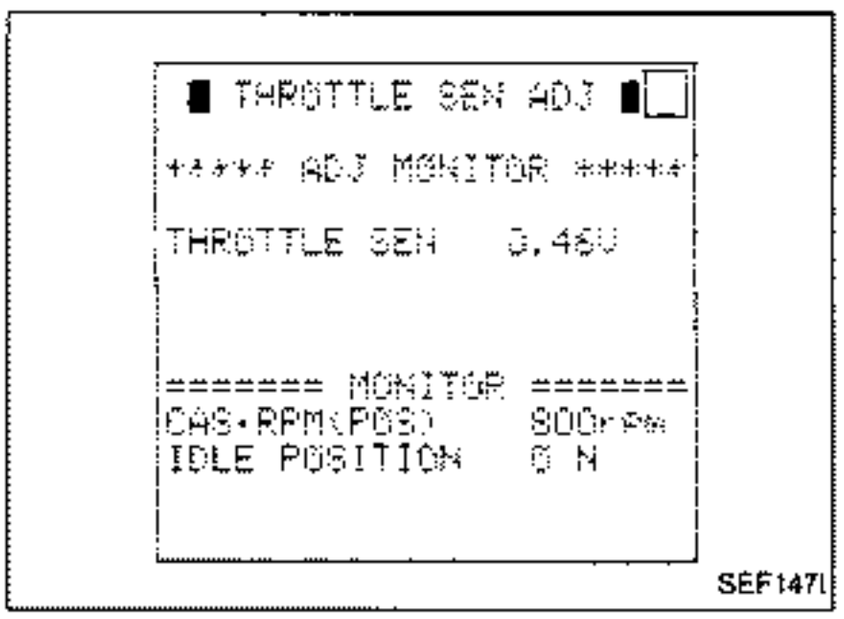

1. Install throttle sensor body in throttle chamber. Do not tighten bolts.
2. Connect throttle sensor and idle switch harness connector.
3. Start engine and warm it up sufficiently.
4. Perform "THROTTLE SEN ADJ" in "WORK SUPPORT" mode.

Measure output voltage of throttle sensor using voltmeter.

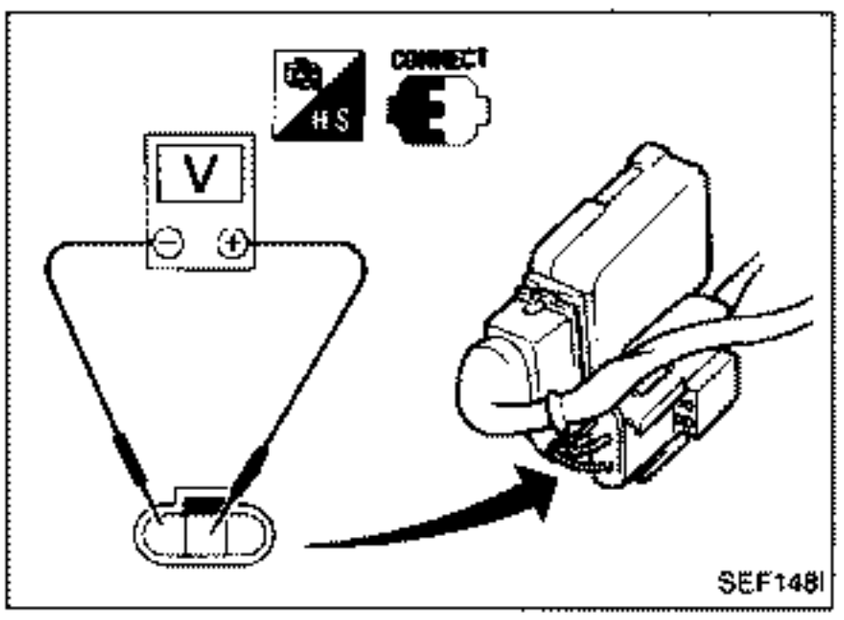

5. Adjust by rotating throttle sensor body so that output voltage is 0.4 to 0.5V.
6. Tighten mounting bolts.
7. Disconnect throttle sensor harness connector for a few seconds and then reconnect it.

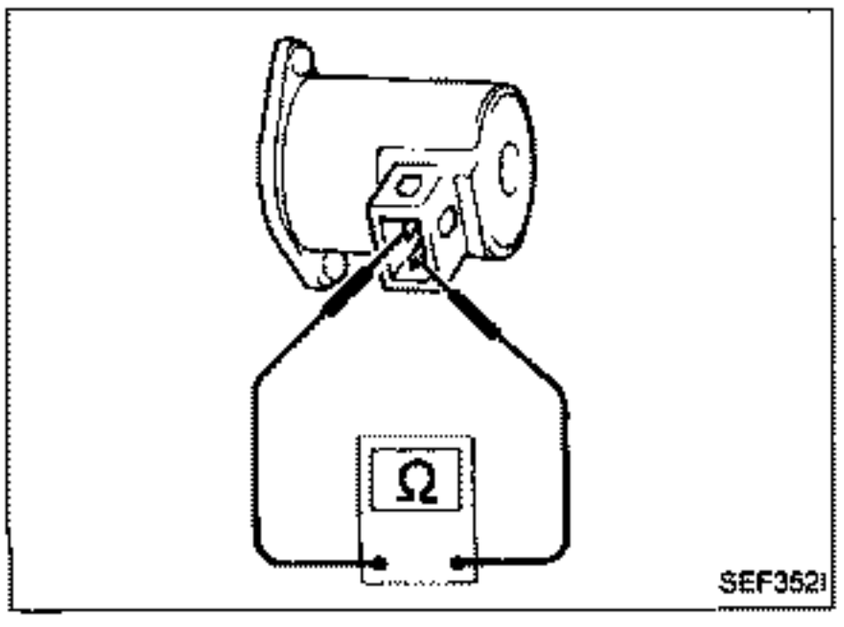

A.A.C. VALVE

- Check A.A.C. valve resistance.

  Resistance:

  Approximately 10Ω

Electrical Components Inspection (Cont'd)

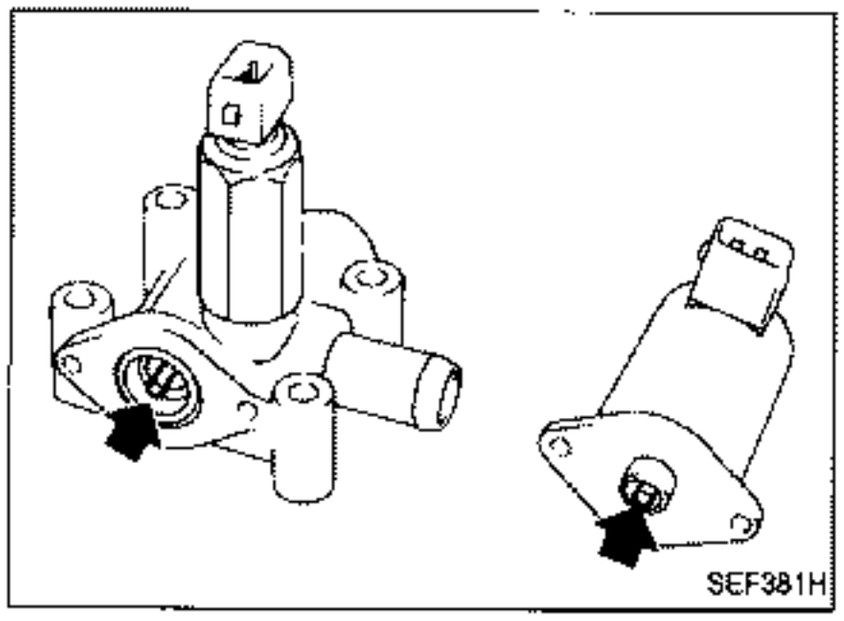

- Check plunger for seizing or sticking.
- Check for broken spring.

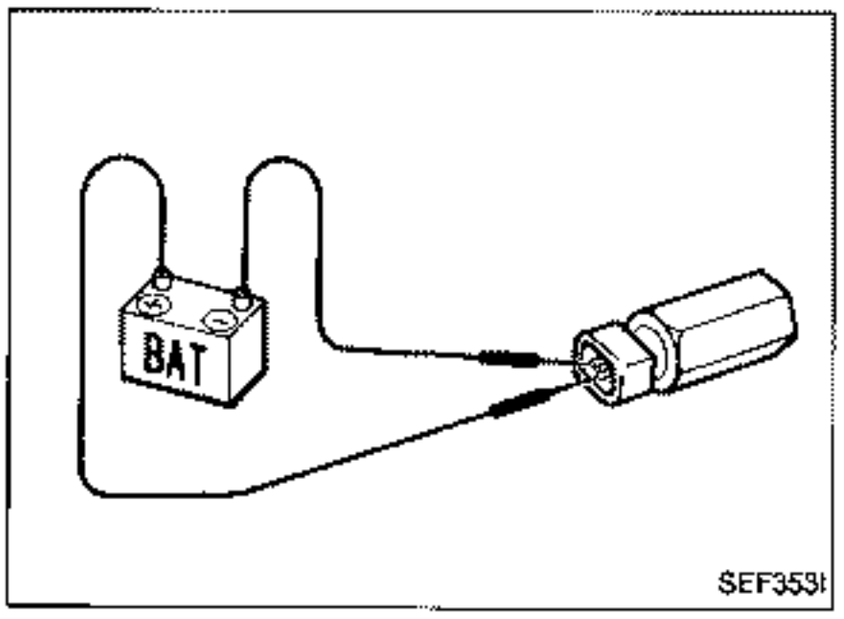

F.I.C.D. SOLENOID VALVE

- Check for clicking sound when applying 12V direct current to terminals.

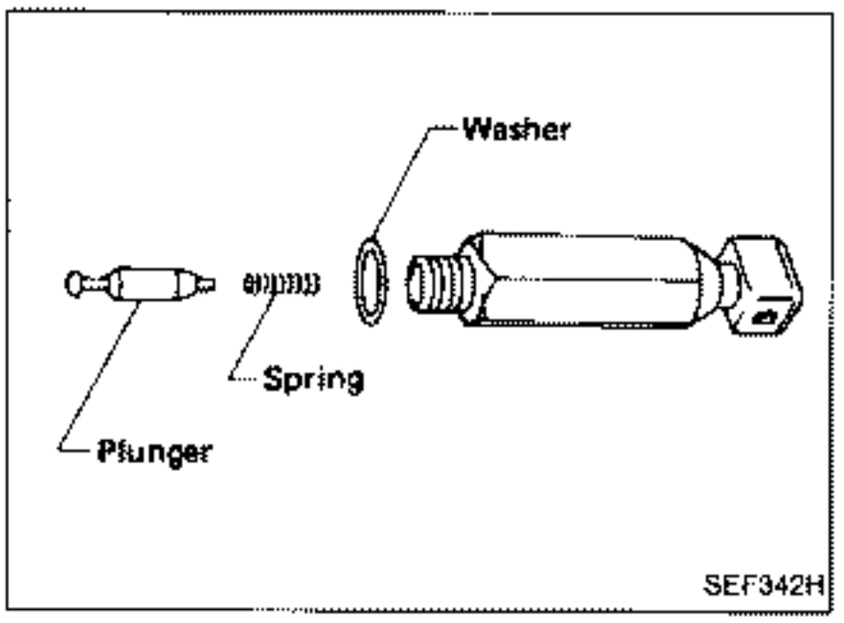

- Check plunger for seizing or sticking.
- Check for broken spring.

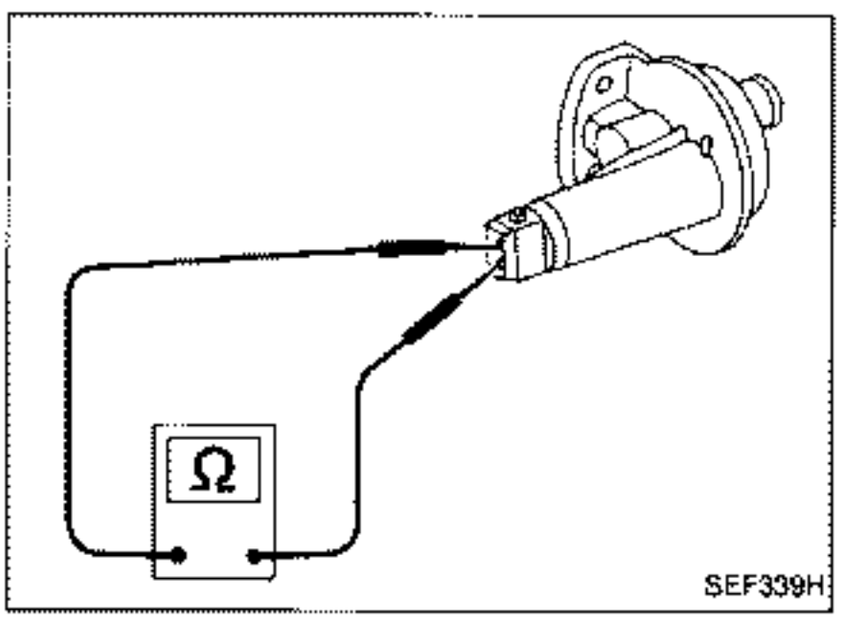

AIR REGULATOR

- Check air regulator resistance.
  Resistance:
  Approximately 70 - 80Ω
- Check air regulator for clogging.

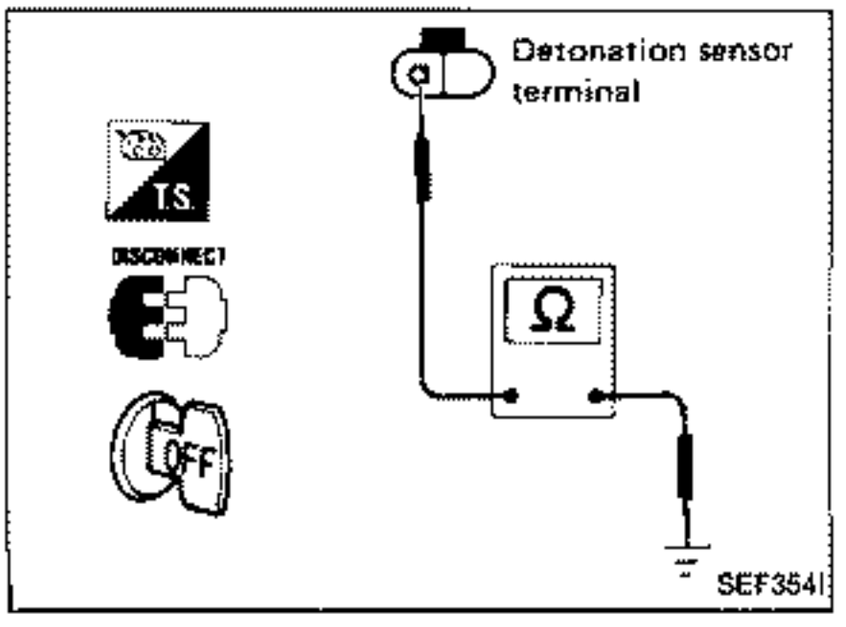

DETONATION SENSOR

1. Disconnect detonation sensor sub-harness connector.
2. Check continuity between terminal ⓐ and ground.

Continuity should exist.

Electrical Components Inspection (Cont'd)

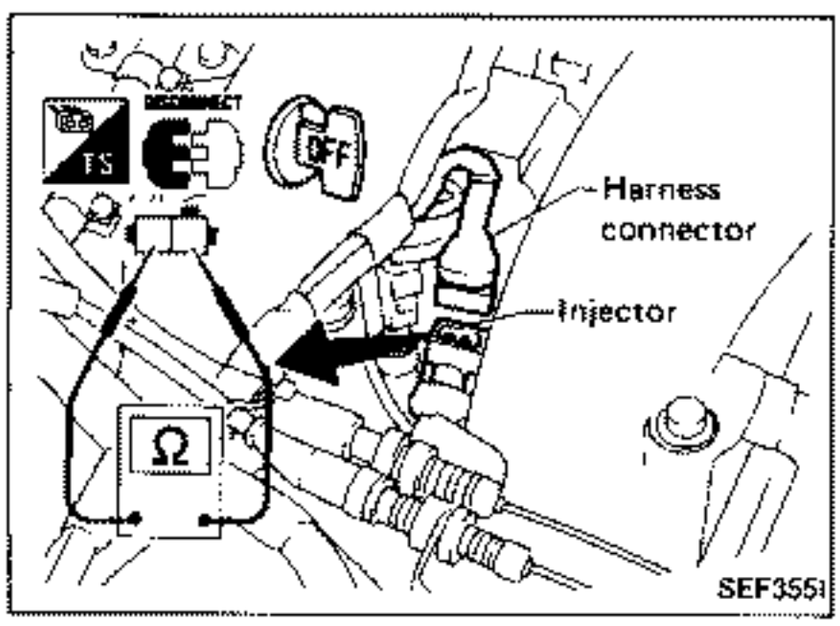

INJECTOR

1. Disconnect injector harness connector.
2. Check resistance between terminals as shown in the figure.
   Resistance: 10 - 14Ω
   If N.G., replace injector.

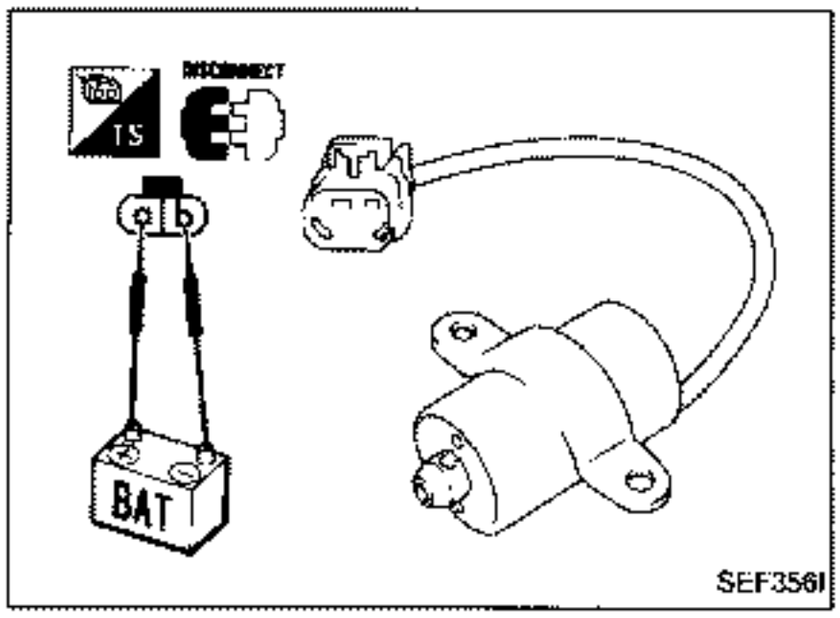

VALVE TIMING CONTROL SOLENOID VALVE

Check valve timing control solenoid valve for normal operation by supplying it with battery voltage between terminals ⓐ and ⓑ.
If N.G., replace solenoid valve.

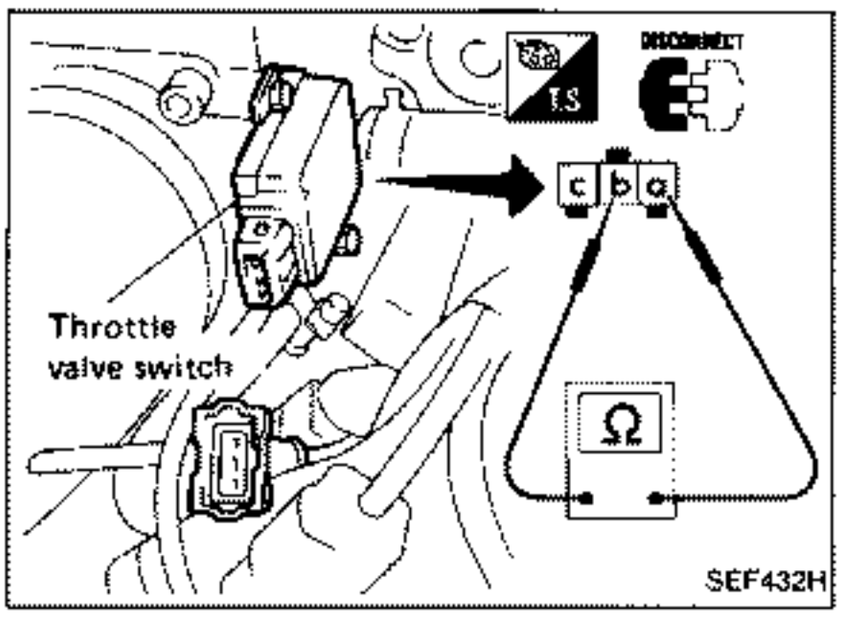

THROTTLE VALVE SWITCH (Idle position)

1. Disconnect idle switch harness connector.
2. Check continuity between terminals ⓐ and ⓑ.

Accelerator pedal condition	Continuity
Released	Yes
Depressed	No

If N.G., replace throttle valve switch.

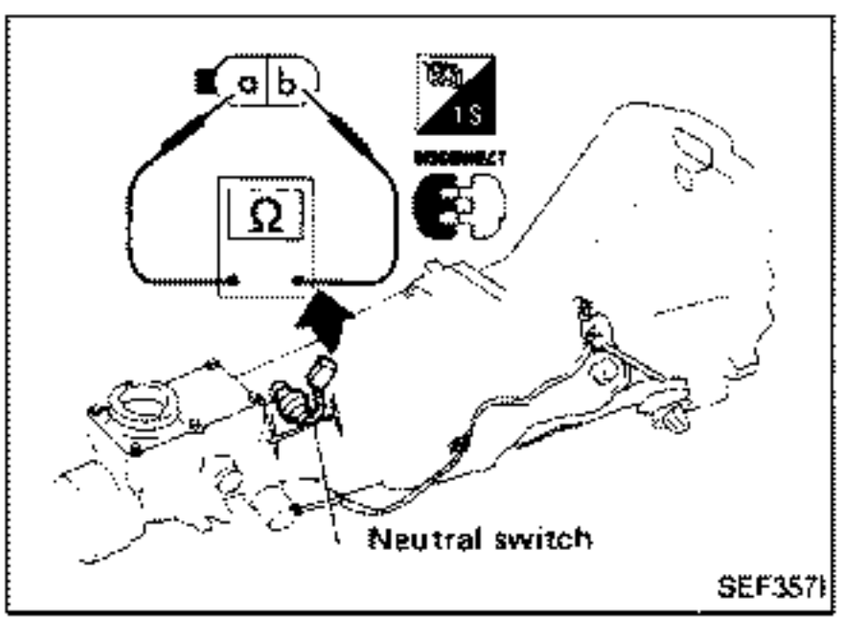

NEUTRAL SWITCH

Check continuity between terminals ⓐ and ⓑ.

Conditions	Continuity
Shift to Neutral	Yes
Shift to other position	No

If N.G., replace neutral switch.

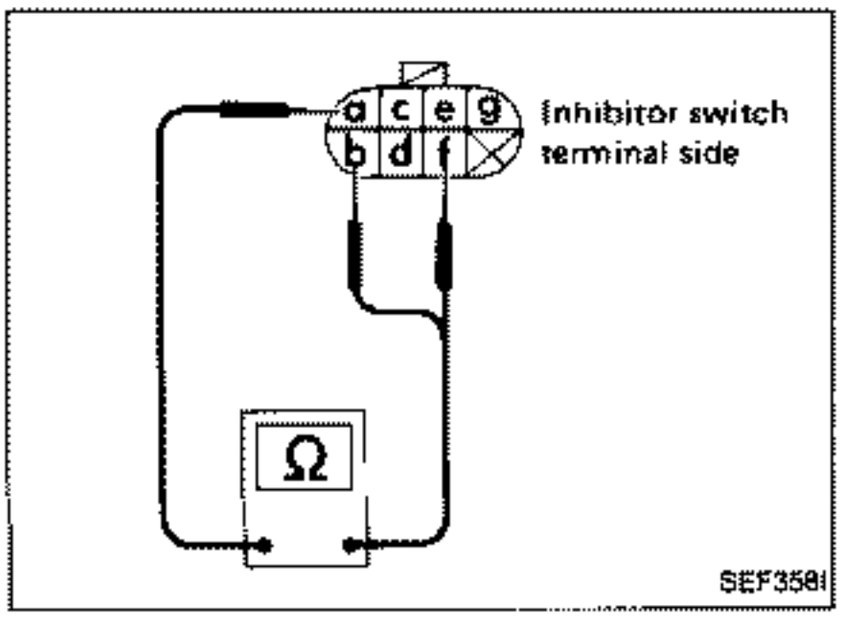

INHIBITOR SWITCH

Check continuity between terminals ⓐ and ⓑ, ⓕ.

Conditions	Continuity between terminals ⓐ and ⓑ	Continuity between terminals ⓐ and ⓕ
Shift to "P" position	Yes	No
Shift to "N" position	No	Yes
Shift to positions other than "P" and "N"	No	No

Electrical Components Inspection (Cont'd)

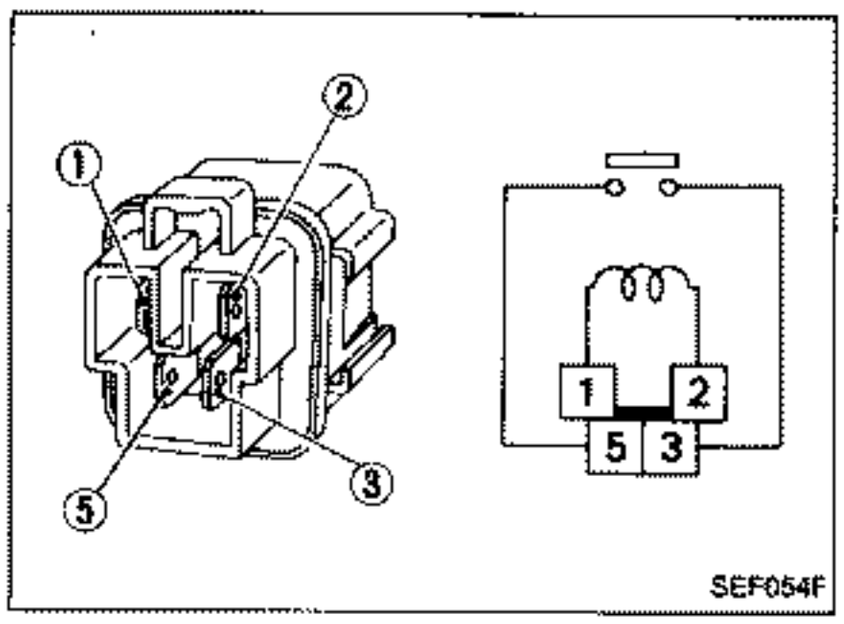

E.C.C.S. RELAY, FUEL PUMP RELAY, RADIATOR FAN RELAY AND IGNITION COIL RELAY

Check continuity between terminals ③ and ⑤.

Conditions	Continuity
12V direct current supply between terminals ① and ②	Yes
No current supply	No

If N.G., replace relay.

POWER STEERING OIL PRESSURE SWITCH

1. Disconnect power steering oil pressure switch harness connector.
2. Check resistance between terminals.
   Resistance: Approximately 2 - 3Ω

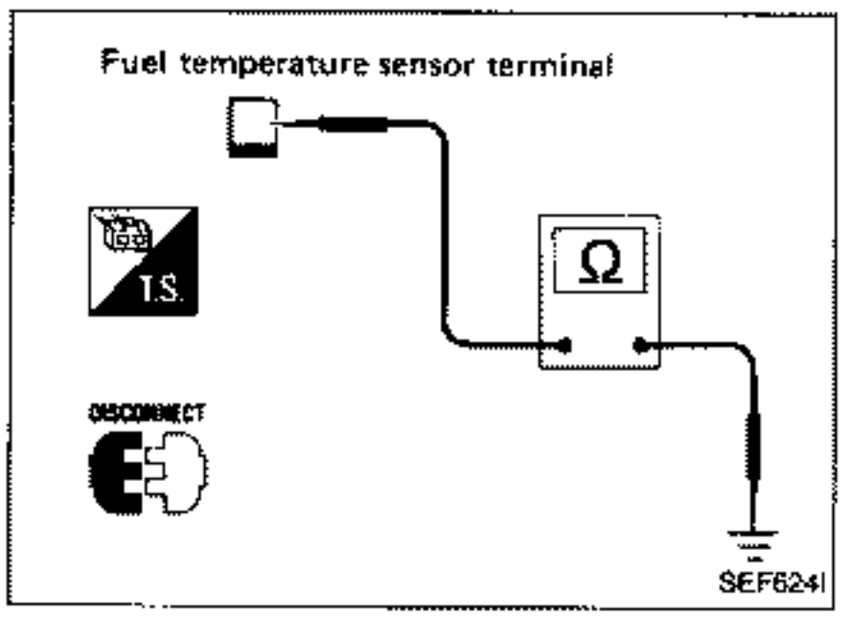

FUEL TEMPERATURE SENSOR

1. Disconnect fuel temperature sensor harness connector.
2. Check resistance between terminal and ground as shown in the figure.

Temperature °C (°F)	Resistance kΩ
20 (68)	2.1 - 2.9
50 (122)	0.68 - 1.00
80 (176)	0.30 - 0.33

If N.G., replace fuel inhibitor switch.

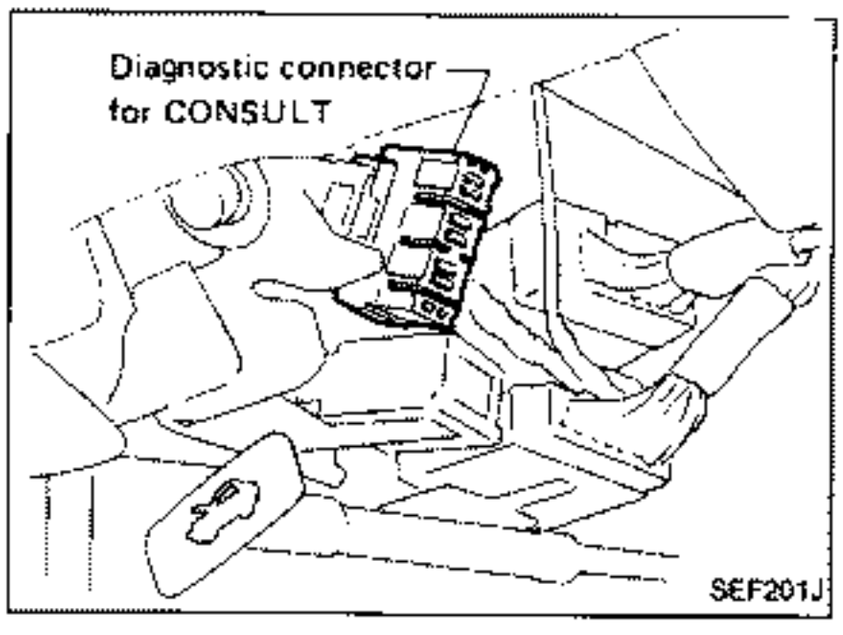

Releasing Fuel Pressure

Before disconnecting fuel line, release fuel pressure from fuel line to eliminate danger.

Perform "FUEL PRESSURE RELEASE" in "WORK SUPPORT" mode with CONSULT.

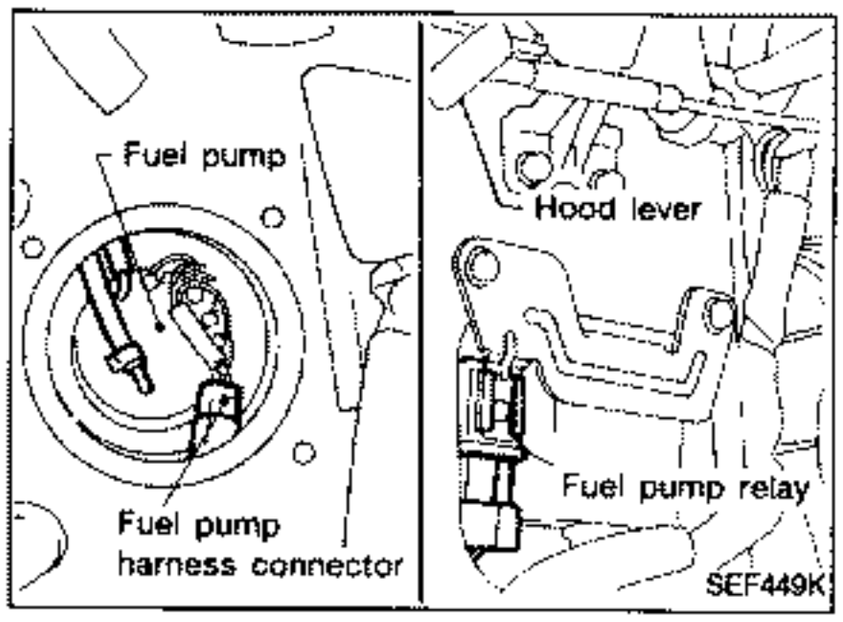

1. Remove fuel pump relay or disconnect fuel pump connector.
2. Start engine.
3. After engine stalls, crank it two or three times to release all fuel pressure.
4. Turn ignition switch off and reconnect fuel pump relay or fuel pump connector.

Fuel Pressure Check

a. When reconnecting fuel line, always use new clamps.
b. Make sure that clamp screw does not contact adjacent parts.
c. Use a torque driver to tighten clamps.
d. Use Pressure Gauge to check fuel pressure.
e. Do not perform fuel pressure check while fuel pressure regulator control system is operating; otherwise, fuel pressure gauge might indicate incorrect readings.

1. Release fuel pressure to zero.
2. Disconnect fuel hose between fuel filter and fuel tube (engine side).
3. Install pressure gauge between fuel filter and fuel tube.
4. Start engine and check for fuel leakage.

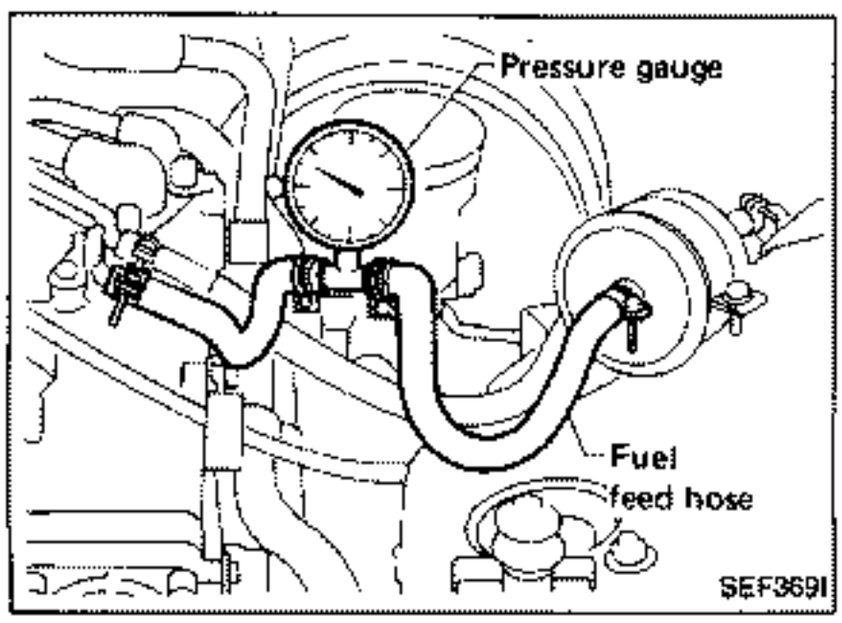

5. Read the indication of fuel pressure gauge.
   At idling:
   When fuel pressure regulator valve vacuum hose is connected.
   Approximately 250.1 kPa (2.501 bar, 2.55 kg/cm^2, 36.3 psi)
   When fuel pressure regulator valve vacuum hose is disconnected.
   Approximately 299.1 kPa (2.991 bar, 3.05 kg/cm^2, 43.4 psi)

Fuel Pressure Check (Cont'd)

6. Stop engine and disconnect fuel pressure regulator vacuum hose from intake manifold.
7. Plug intake manifold with a rubber cap.
8. Connect variable vacuum source to fuel pressure regulator.

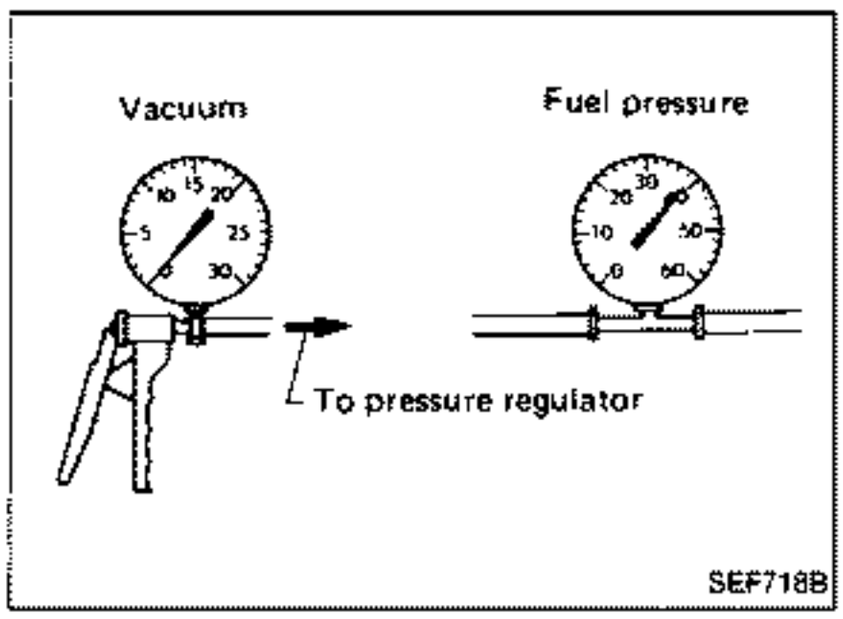

9. Start engine and read indication of fuel pressure gauge as vacuum is changed.

Fuel pressure should decrease as vacuum increases. If results are unsatisfactory, replace fuel pressure regulator.

Injector Removal and Installation

1. Release fuel pressure to zero.
2. Drain coolant from radiator drain cock.
3. Remove or disconnect the following:
   - Related harnesses, wires and tubes
   - Intake manifold collector

   For details, refer to EM section.
4. Remove injectors with fuel tube assembly.
5. Remove injectors from fuel tube assembly.
6. Install injectors as follows:

1) Clean exterior of injector tail piece.
2) Use new O-rings.

CAUTION:
After properly connecting injectors to fuel tube assembly, check connections for fuel leakage.

7. Assemble injectors with fuel tube assembly to intake manifold.

Description

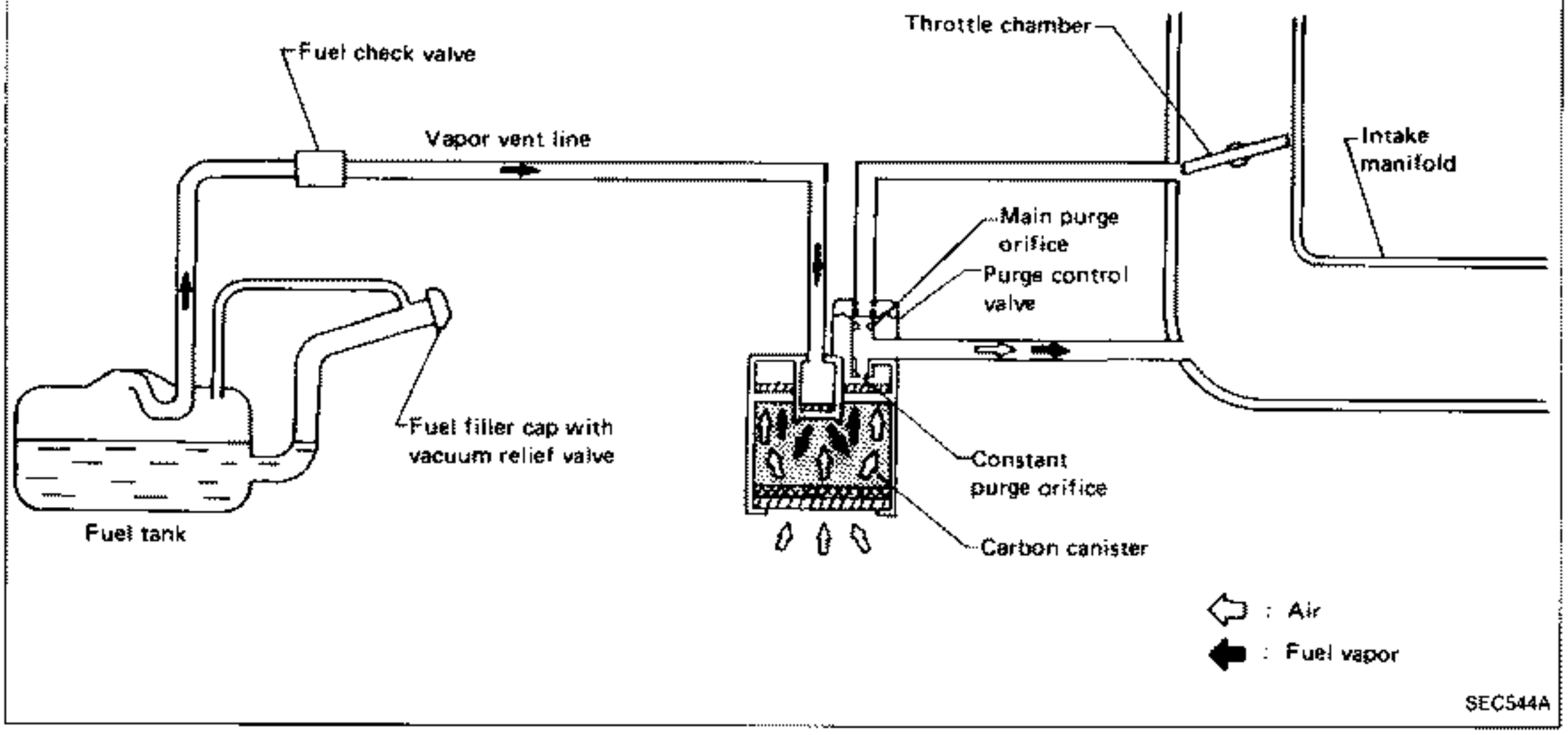

The evaporative emission control system is used to reduce hydrocarbons emitted into the atmosphere from the fuel system. This reduction of hydrocarbons is accomplished by activated charcoals in the carbon canister.

The fuel vapor from the sealed fuel tank is led into the canister which contains activated carbon and the vapor is stored there when the engine is not running.

The canister retains the fuel vapor until the canister is purged by the air drawn through the bottom of the canister to the intake manifold when the engine is running. When the engine runs at idle, the purge control valve is closed.

Only a small amount of stored vapor flows into the intake manifold through the constant purge orifice. As the engine speed increases, and the throttle vacuum rises higher, the purge control valve opens and the vapor is sucked into the intake manifold through both the main purge orifice and the constant purge orifice.

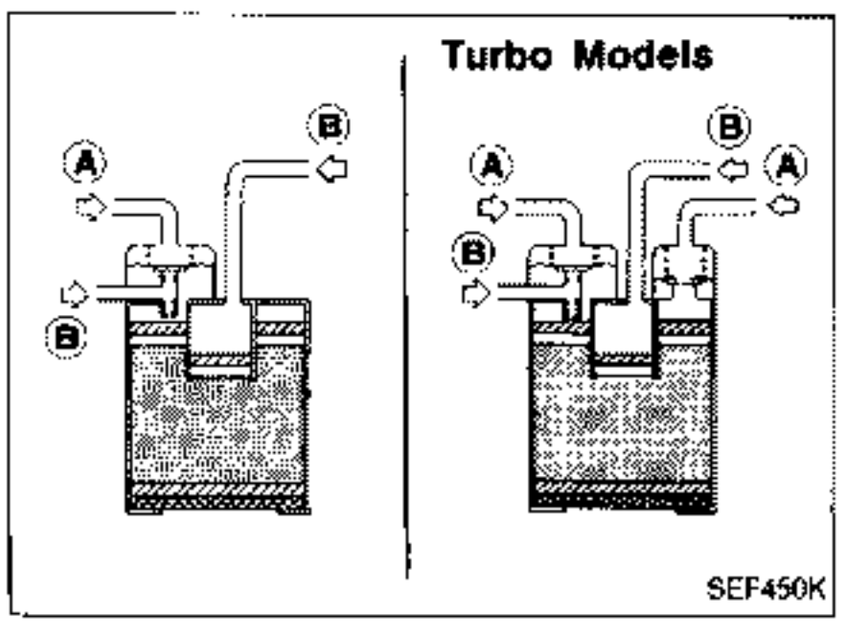

Inspection

CARBON CANISTER

Check carbon canister as follows:

Ⓐ : Blow air and ensure that there is no leakage.
Ⓑ : Blow air and ensure that there is leakage.

Inspection (Cont'd)

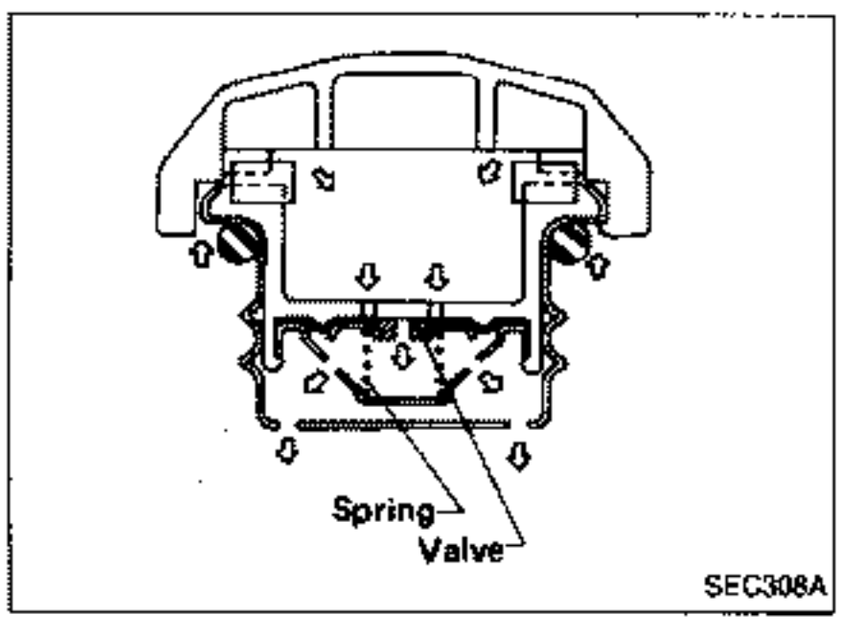

FUEL TANK VACUUM RELIEF VALVE

1. Wipe clean valve housing.
2. Suck air through the cap. A slight resistance accompanied by valve clicks indicates that valve is in good mechanical condition. Note also that, by further sucking air, the resistance should disappear with valve clicks.
3. If valve is clogged or if no resistance is felt, replace cap as an assembly.

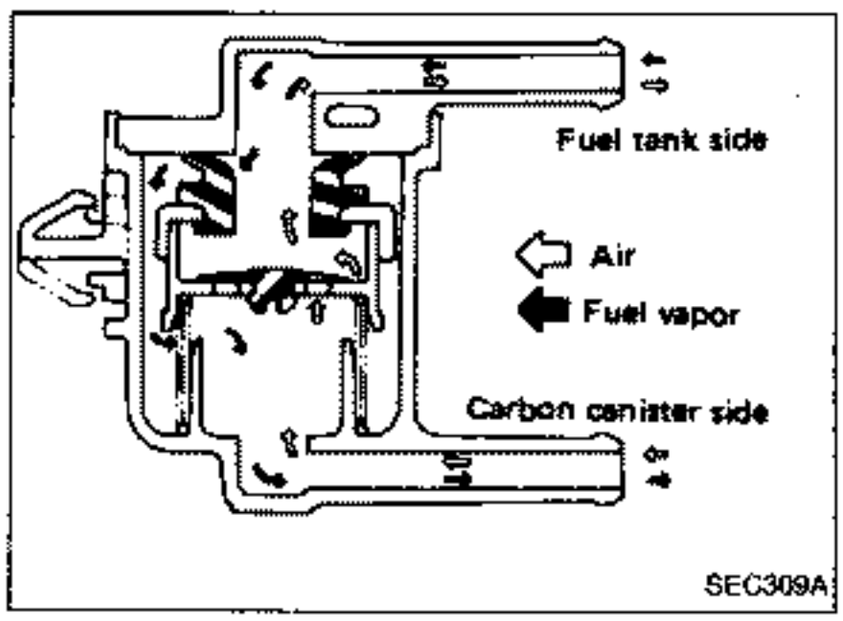

FUEL CHECK VALVE

1. Blow air through connector on fuel tank side.
   A considerable resistance should be felt and a portion of air flow should be directed toward the canister.
2. Blow air through connector on canister side.
   Air flow should be smoothly directed toward fuel tank.
3. If fuel check valve is suspected of not properly functioning in steps 1 and 2 above, replace it.

Description

This system returns blow-by gas to both the intake manifold and air inlet tubes.
The positive crankcase ventilation (P.C.V.) valve is provided to conduct crankcase blow-by gas to the intake manifold.
During partial throttle operation of the engine, the intake manifold sucks the blow-by gas through the P.C.V. valve.
Normally, the capacity of the valve is sufficient to handle any blow-by and a small amount of ventilating air.
The ventilating air is then drawn from the air inlet tubes, through the hose connecting air inlet tubes to rocker cover, into the crankcase.
Under full-throttle condition, the manifold vacuum is insufficient to draw the blow-by flow through the valve, and its flow goes through the hose connection in the reverse direction.
On vehicles with an excessively high blow-by some of the flow will go through the hose connection to the air inlet tubes under all conditions.

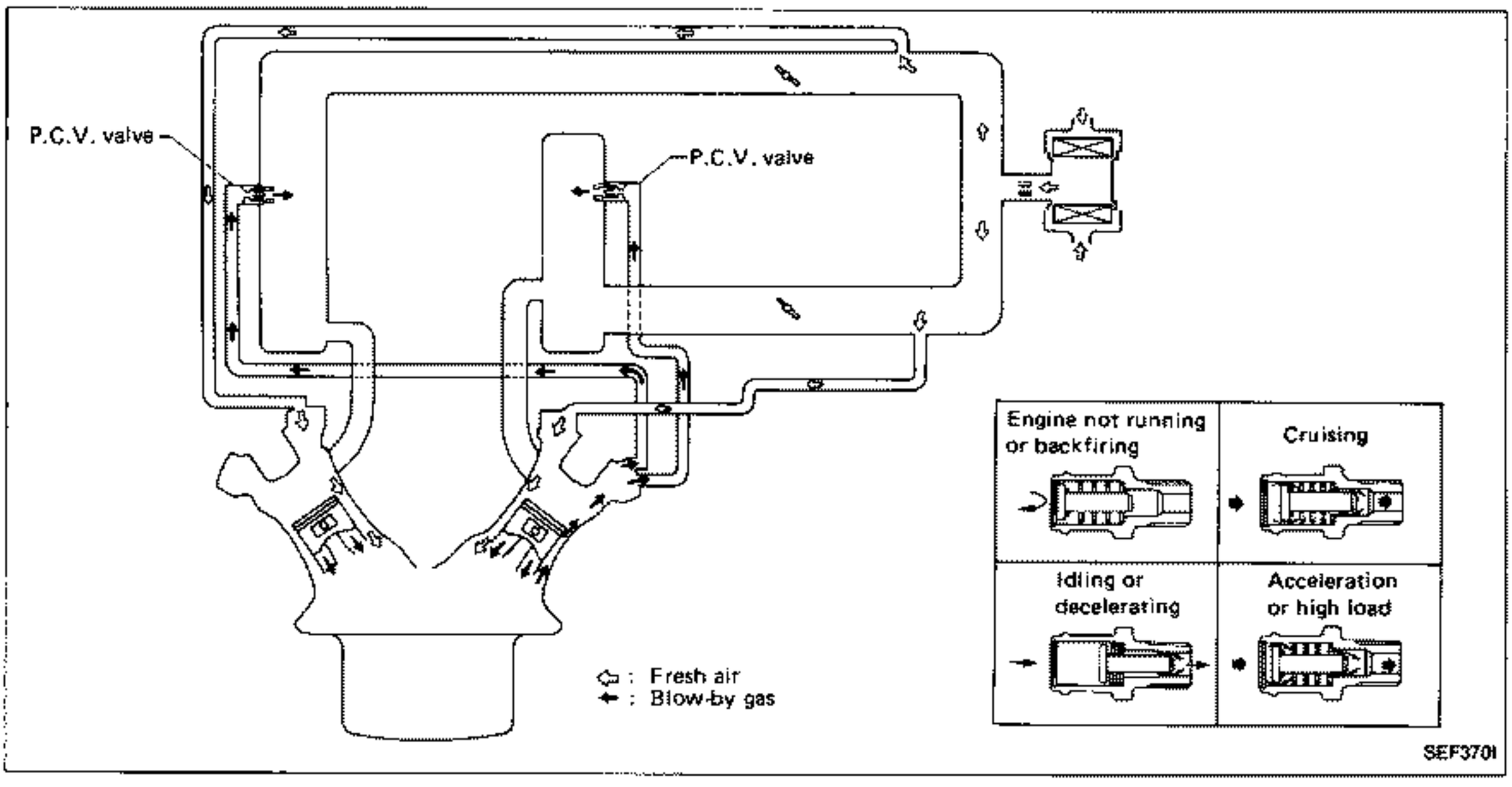

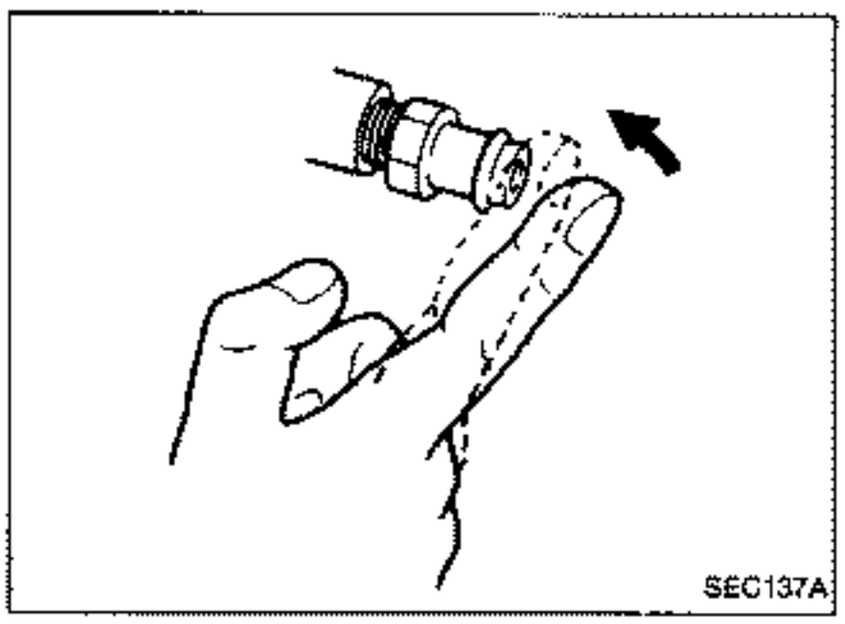
SEC137A

Inspection

P.C.V. (Positive Crankcase Ventilation)

With engine running at idle, remove ventilation hose from P.C.V. valve; if the valve is working properly, a hissing noise will be heard as air passes through it and a strong vacuum should be felt immediately when a finger is placed over valve inlet.

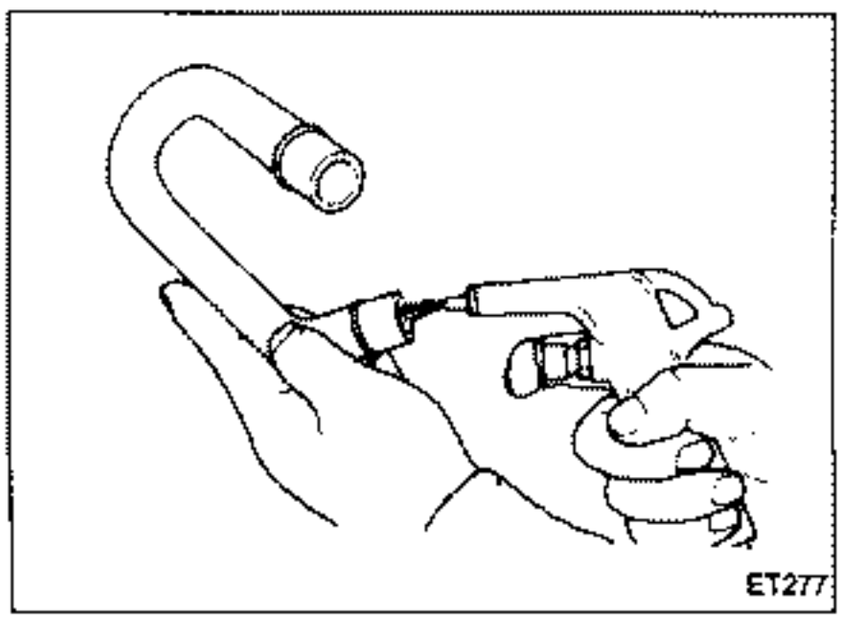
ET277

VENTILATION HOSE

1. Check hoses and hose connections for leaks.
2. Disconnect all hoses and clean with compressed air. If any hose cannot be freed of obstructions, replace.

Z.ONE.DATSUN

General Specifications

PRESSURE REGULATOR Regulated pressure kPa (bar, kg/cm^2, psi)	299.1 (2.991, 3.05, 43.4)

Inspection and Adjustment

Idle speed*1	rpm	
No-load*2		
M/T		700 ± 50
A/T (in "N" position)		
Non-turbo		770 ± 50
Turbo		750 ± 50
Air conditioner: ON		
Non-turbo		800 ± 50
Turbo		850 ± 50
Ignition timing	degree	15 ± 2 B.T.D.C.
Throttle sensor idle position	V	0.4 - 0.5

*1: Feedback controlled and needs no adjustments

*2: Under the following conditions:
- Air conditioner switch: OFF
- Steering wheel: Kept straight
- Electric load: OFF (Lights, heater, fan & rear defogger)
- Radiator fan: OFF

IGNITION COIL

Primary voltage	V	12
Primary resistance [at 20°C (68°F)]	Ω	Approximately 0.7
Secondary resistance [at 20°C (68°F)]	kΩ	Approximately 8

ENGINE TEMPERATURE SENSOR AND FUEL TEMPERATURE SENSOR

Temperature °C (°F)	Resistance kΩ
20 (68)	2.1 - 2.9
50 (122)	0.68 - 1.00
80 (176)	0.30 - 0.33

FUEL PUMP

Resistance	Ω	Approximately 0.5

EXHAUST GAS TEMPERATURE SENSOR

Resistance [at 100°C (212°F)]	kΩ	85.3 ± 8.53

EXHAUST GAS SENSOR HEATER

Resistance	Ω	3 - 1,000

A.A.C. VALVE

Resistance	Ω	Approximately 10

INJECTOR

Resistance	Ω	10 - 14

THROTTLE SENSOR

Accelerator pedal conditions	Resistance kΩ
Completely released	Approximately 1
Partially released	1 - 9
Completely depressed	Approximately 9

AIR REGULATOR

Resistance	Ω	70 - 80

POWER STEERING OIL PRESSURE SWITCH

Resistance	Ω	Approximately 2 - 3

ENGINE CONTROL, FUEL & EXHAUST SYSTEMS

SECTION FE

CONTENTS

ENGINE CONTROL SYSTEM FE-2
FUEL SYSTEM FE-3
EXHAUST SYSTEM FE-4

Accelerator Control System

- When removing accelerator cable, make a mark to indicate lock nut's initial position.
- Check that throttle valve opens fully when accelerator pedal is fully depressed and that it returns to idle position when pedal is released.
- Adjust accelerator cable according to the following procedure.
  Tighten "adjusting nut" until "throttle drum" starts to move.
  From that position turn back "adjusting nut" 1.5 to 2 turns, and fasten it with a lock nut.
- Check accelerator control parts for improper contact with any adjacent parts.
- When connecting accelerator cable, be careful not to twist or scratch its inner wire.

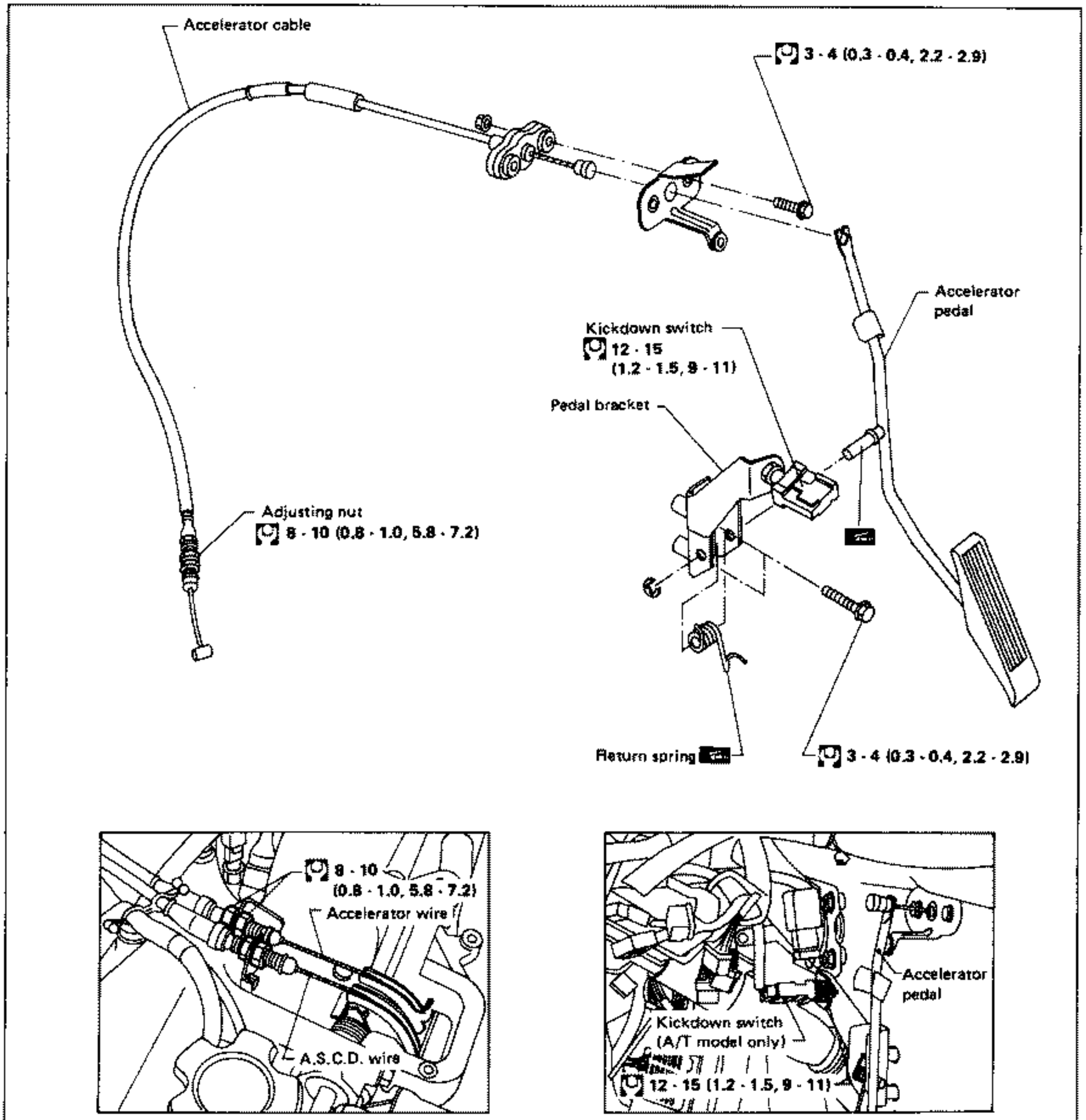

WARNING:
When replacing fuel line parts, be sure to observe the following:
- **Put a "CAUTION: INFLAMMABLE" sign in workshop.**
- **Be sure to furnish workshop with a CO_2 fire extinguisher.**
- **Do not smoke while servicing fuel system. Keep open flames and sparks away from work area.**
- **Be sure to disconnect battery ground cable before conducting operations.**
- **Put drained fuel in an explosion-proof container and put lid on securely.**

CAUTION:
- **Before disconnecting fuel hose, release fuel pressure from fuel line. Refer to "Changing Fuel Filter" in MA section.**
- **Do not disconnect any fuel line unless absolutely necessary.**
- **Plug hose and pipe openings to prevent entry of dust or dirt.**
- **Always replace O-ring and clamps with new ones.**
- **Do not kink or twist hose and tube when they are installed.**
- **Do not tighten hose clamps excessively.**
- **When installing fuel check valve, be careful of its designated direction. (Refer to section EF & EC.)**
- **After assembly, run engine and check for fuel leaks at connections.**

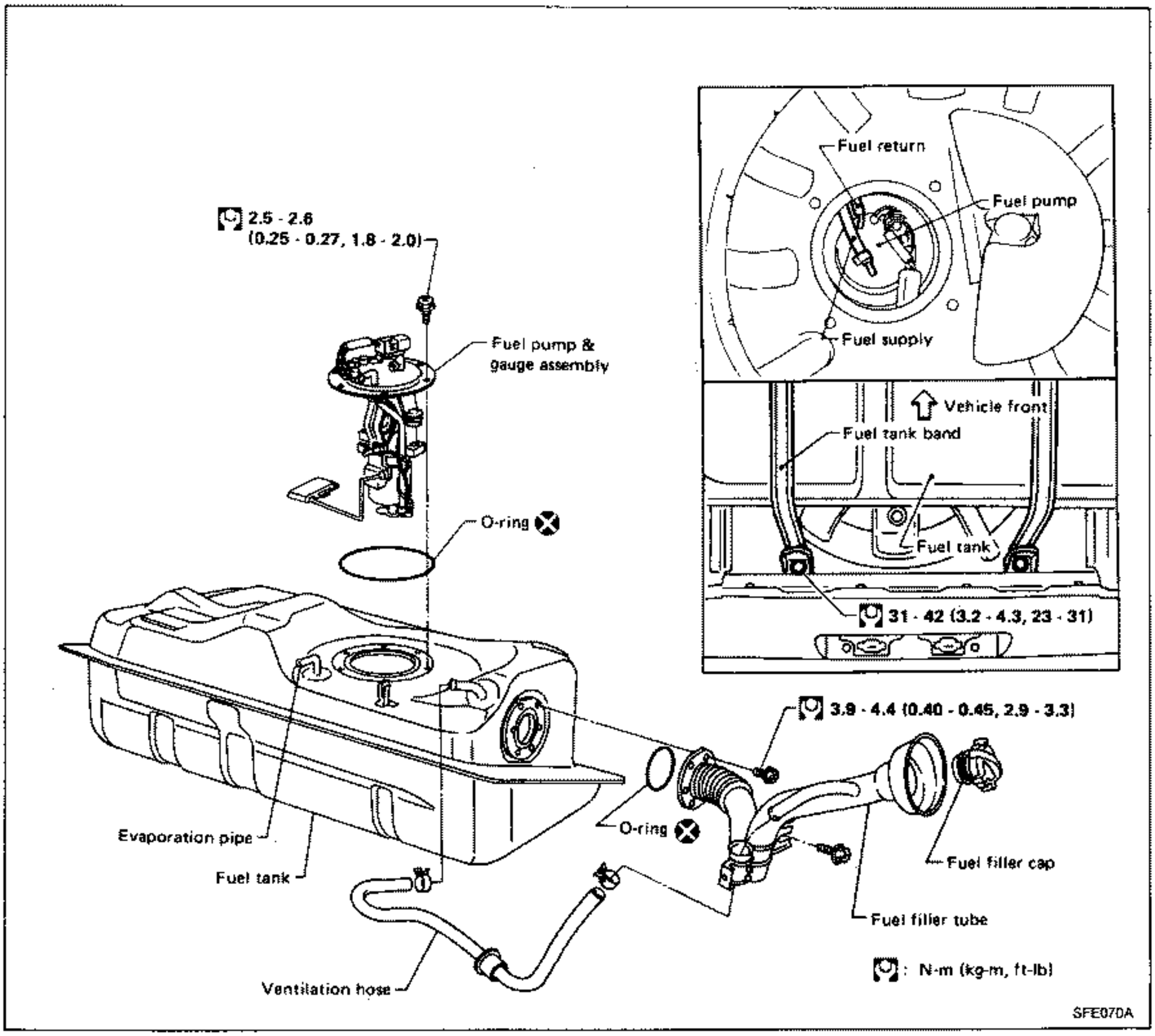

EXHAUST SYSTEM

CAUTION:

- Always replace exhaust gaskets with new ones when reassembling.
- With engine running, check all tube connections for exhaust gas leaks, and entire system for unusual noises.
- After installation, check to assure that mounting brackets and mounting insulator are free from undue stress. If any of above parts are not installed properly, excessive noise or vibration may be transmitted to vehicle body.

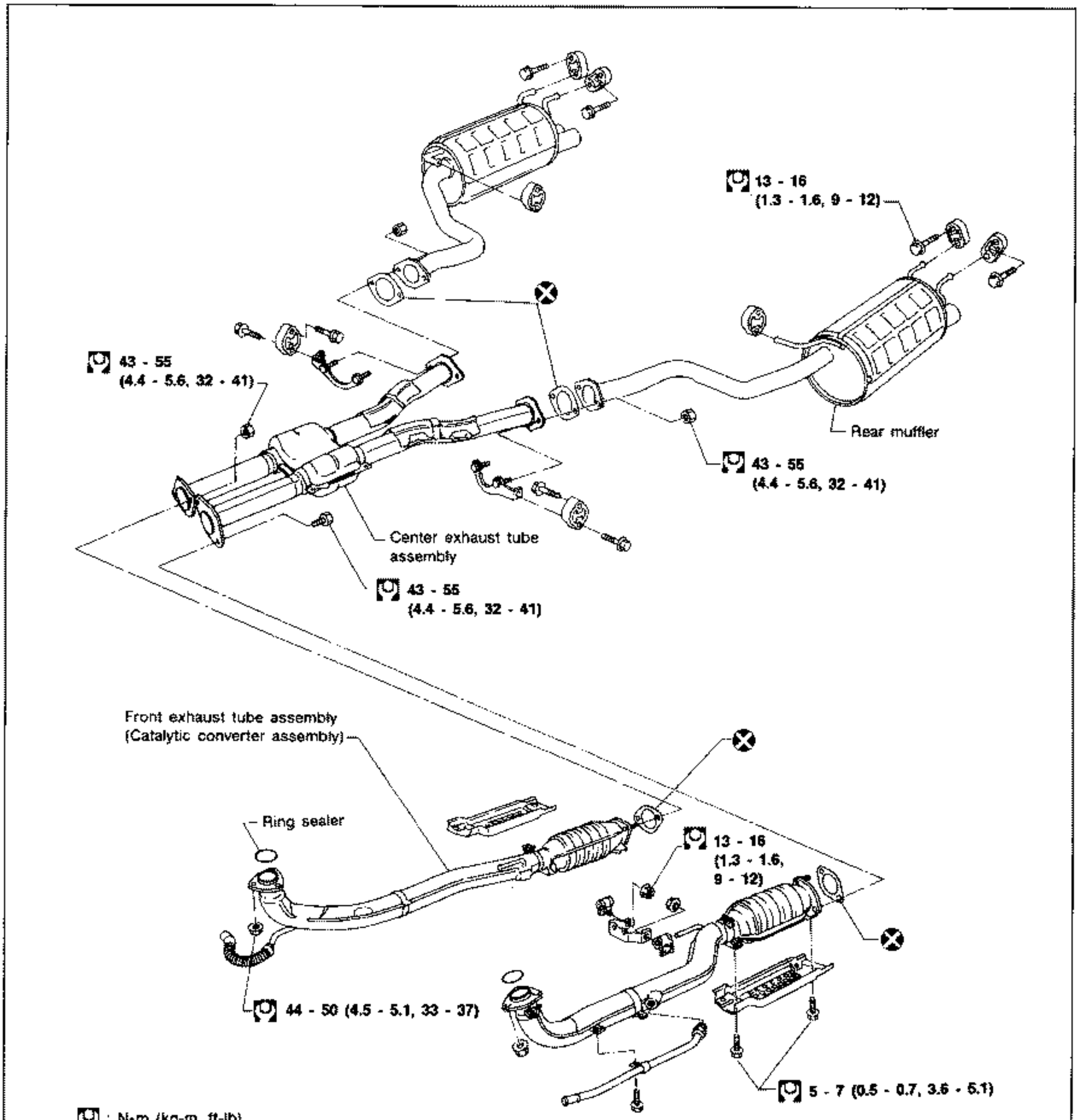

SECTION CL

CONTENTS

PRECAUTIONS AND PREPARATION ..... CL- 2
CLUTCH SYSTEM ..... CL- 4
INSPECTION AND ADJUSTMENT ..... CL- 7
HYDRAULIC CLUTCH CONTROL ..... CL- 9
CLUTCH RELEASE MECHANISM CL-13
CLUTCH DISC AND CLUTCH COVER CL-15
SERVICE DATA AND SPECIFICATIONS (S.D.S.) CL-17

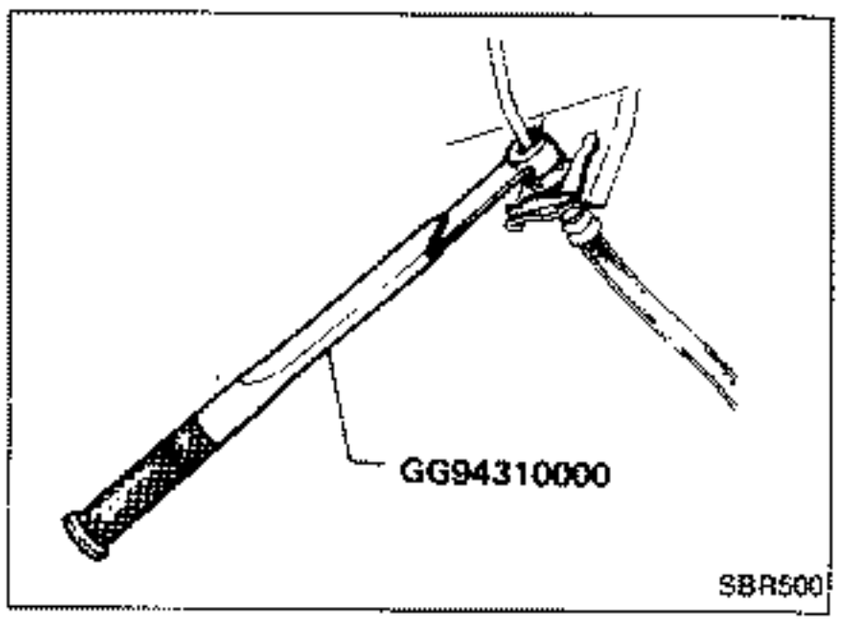

Precautions

- Recommended fluid is brake fluid "DOT 3".
- Never reuse drained brake fluid.
- Be careful not to splash brake fluid on painted areas.
- When removing and installing clutch piping, use Tool.
- Use new brake fluid to clean or wash all parts of master cylinder, operating cylinder and clutch damper.
- Never use mineral oils such as gasoline or kerosene. It will ruin the rubber parts of the hydraulic system.

WARNING:
After cleaning the clutch disc, wipe it with a dust collector. Do not use compressed air.

Preparation

SPECIAL SERVICE TOOLS

Tool number Tool name	Description	
ST20050010 Base plate		Inspecting diaphragm spring of clutch cover
ST20050100 Distance piece		Inspecting diaphragm spring of clutch cover
GG94310000 Flare nut torque wrench	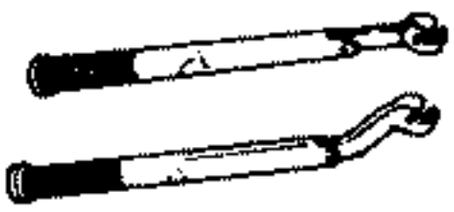	Removing and installing each clutch piping
ST20600000 Clutch aligning bar		Installing clutch cover and clutch disc
ST20050240 Diaphragm spring adjusting wrench	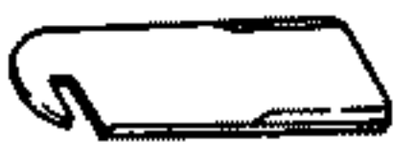	Adjusting unevenness of diaphragm spring of clutch cover

Preparation (Cont'd)

COMMERCIAL SERVICE TOOLS

Tool name	Description
Bearing puller	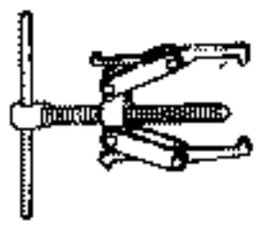 Removing release bearing
Bearing drift	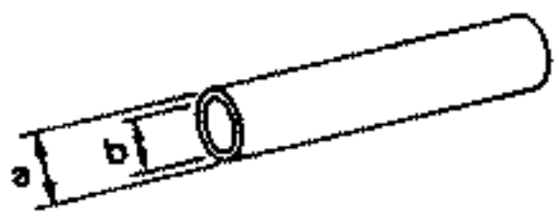 Installing release bearing **a: 50 mm (1.97 in) dia.** **b: 45 mm (1.77 in) dia.**

VG30DE engine model

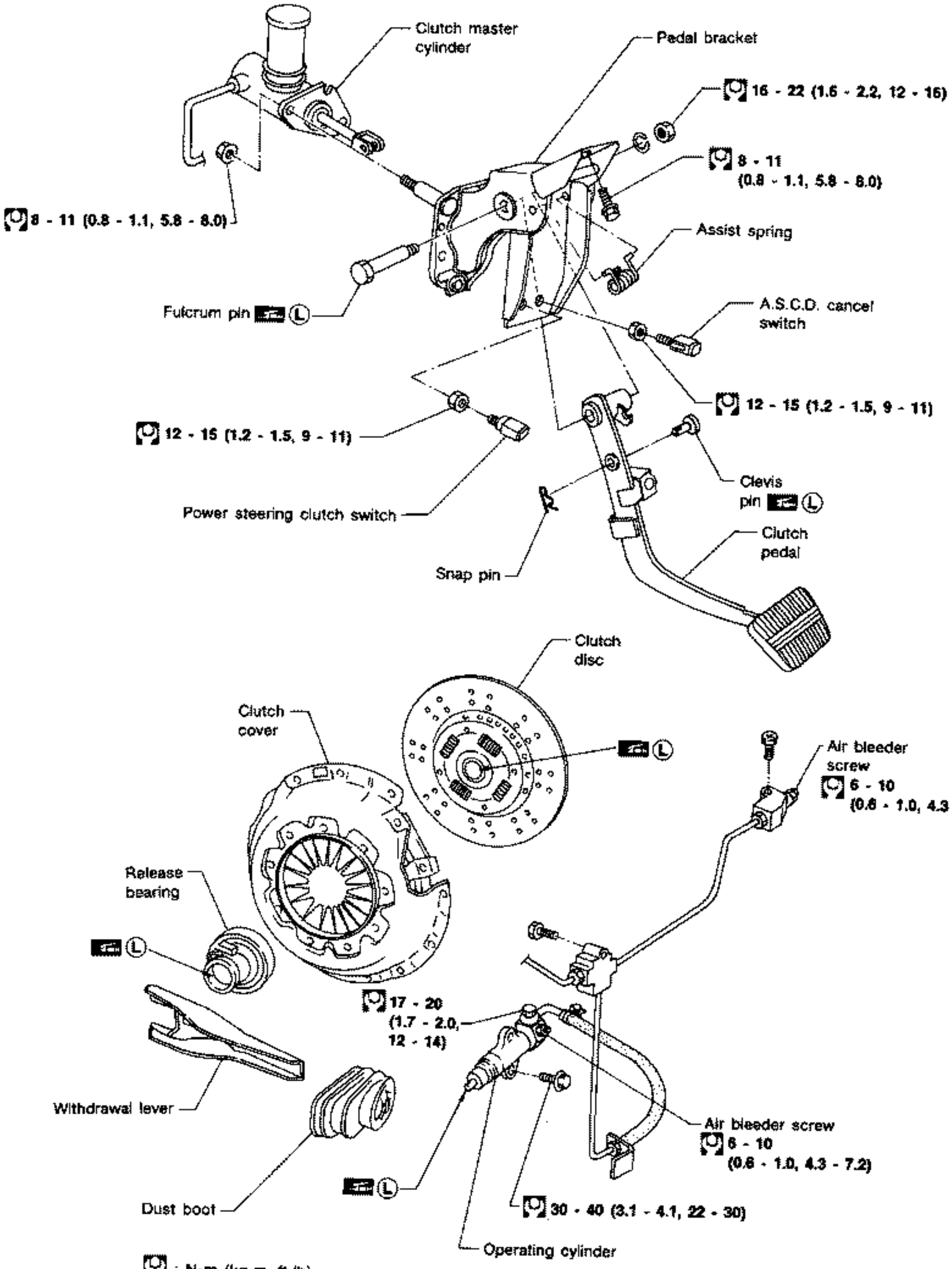

SCL410

VG30DETT engine model

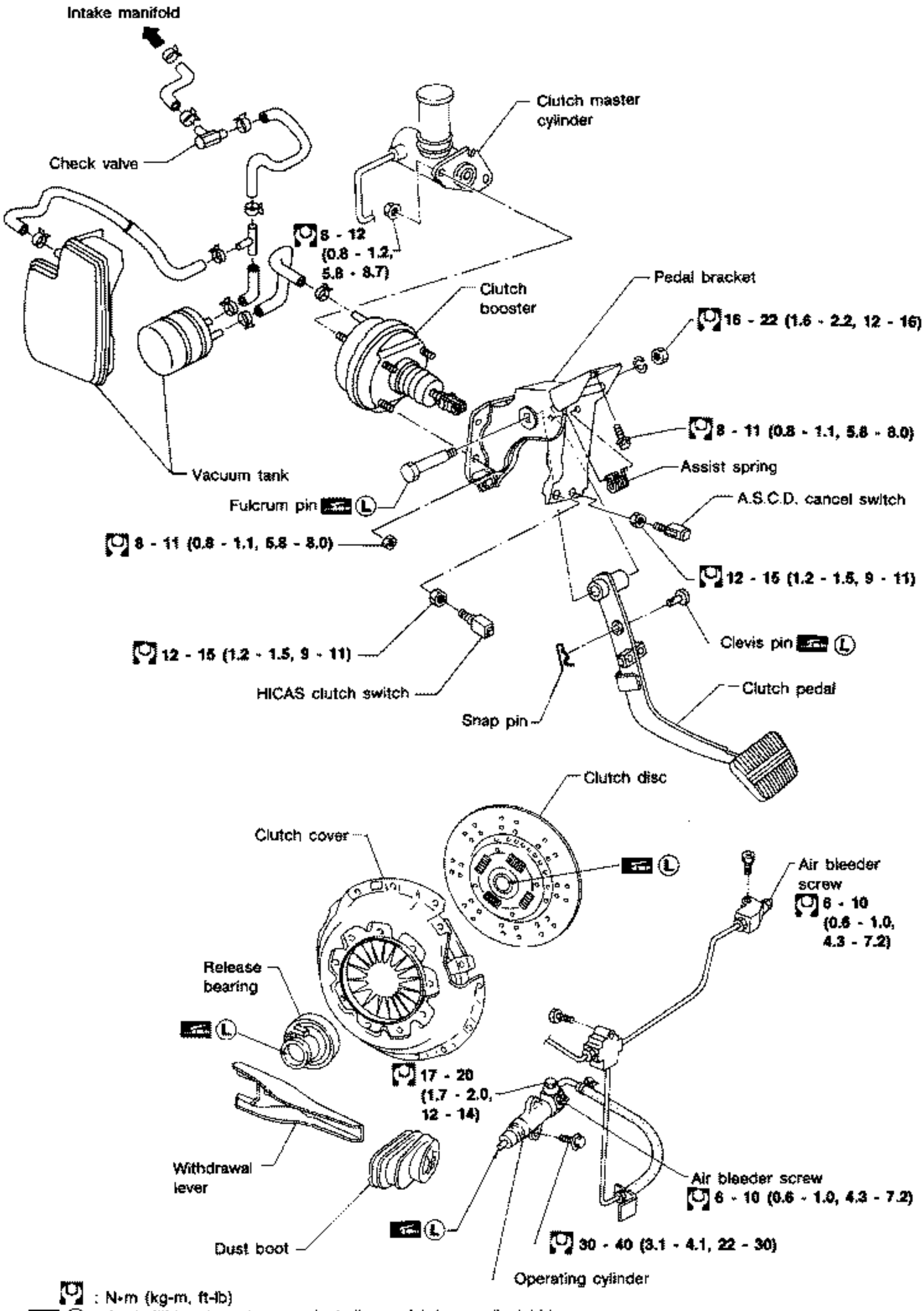

: N·m (kg-m, ft-lb)
: Apply lithium-based grease including molybdenum disulphide.

SCL411

Vacuum Hose Layout — VG30DETT Engine
Model —

L.H. drive model

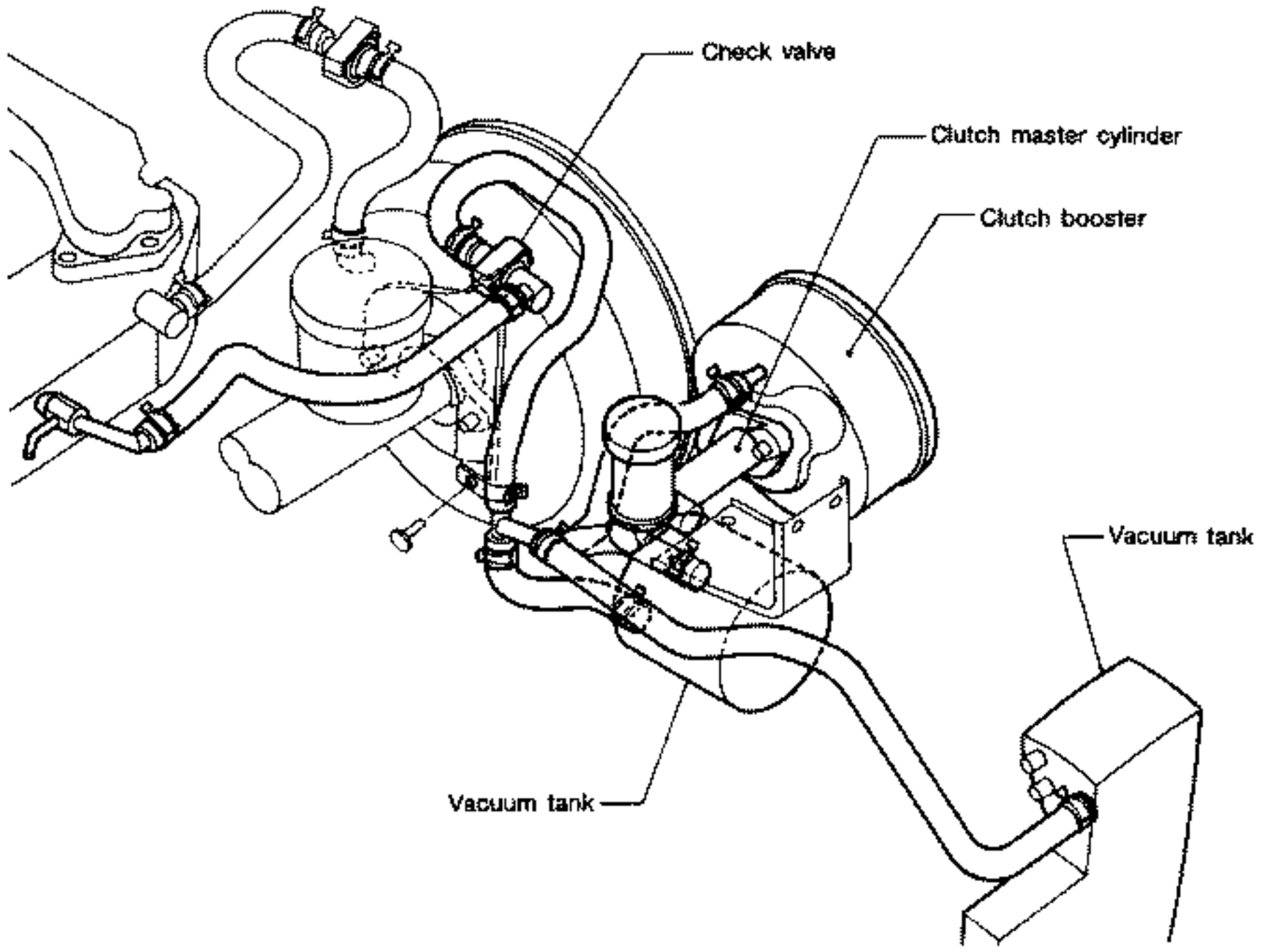

R.H. drive model

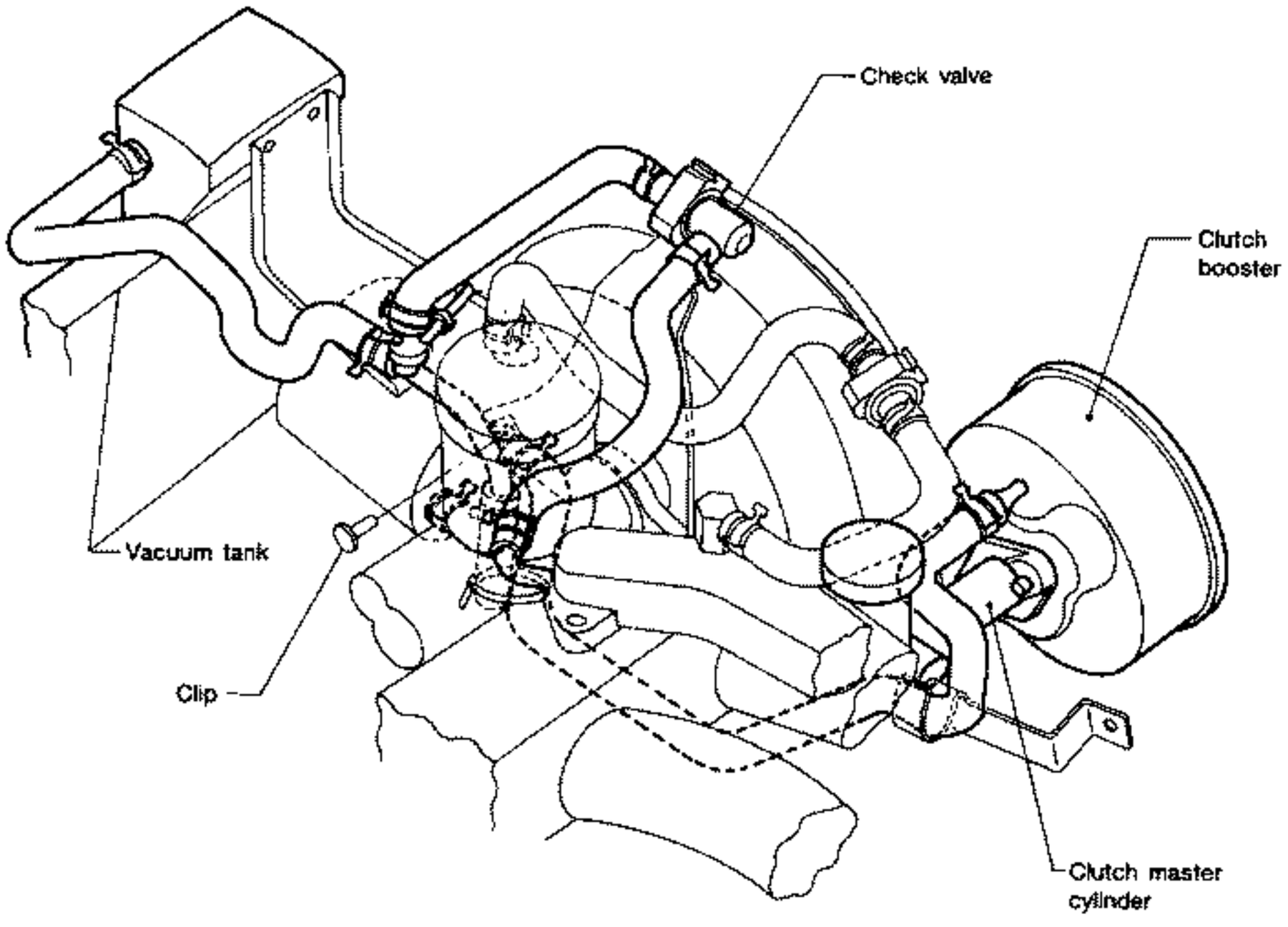

Adjusting Clutch Pedal

1. Adjust pedal height with A.S.C.D. cancel switch and HICAS clutch switch or power steering clutch switch.
   Pedal height "H":
   VG30DE engine
   211 - 221 mm (8.31 - 8.70 in)
   L.H.D. model with VG30DETT engine
   183 - 193 mm (7.20 - 7.60 in)
   R.H.D. model with VG30DETT engine
   197 - 207 mm (7.76 - 8.15 in)

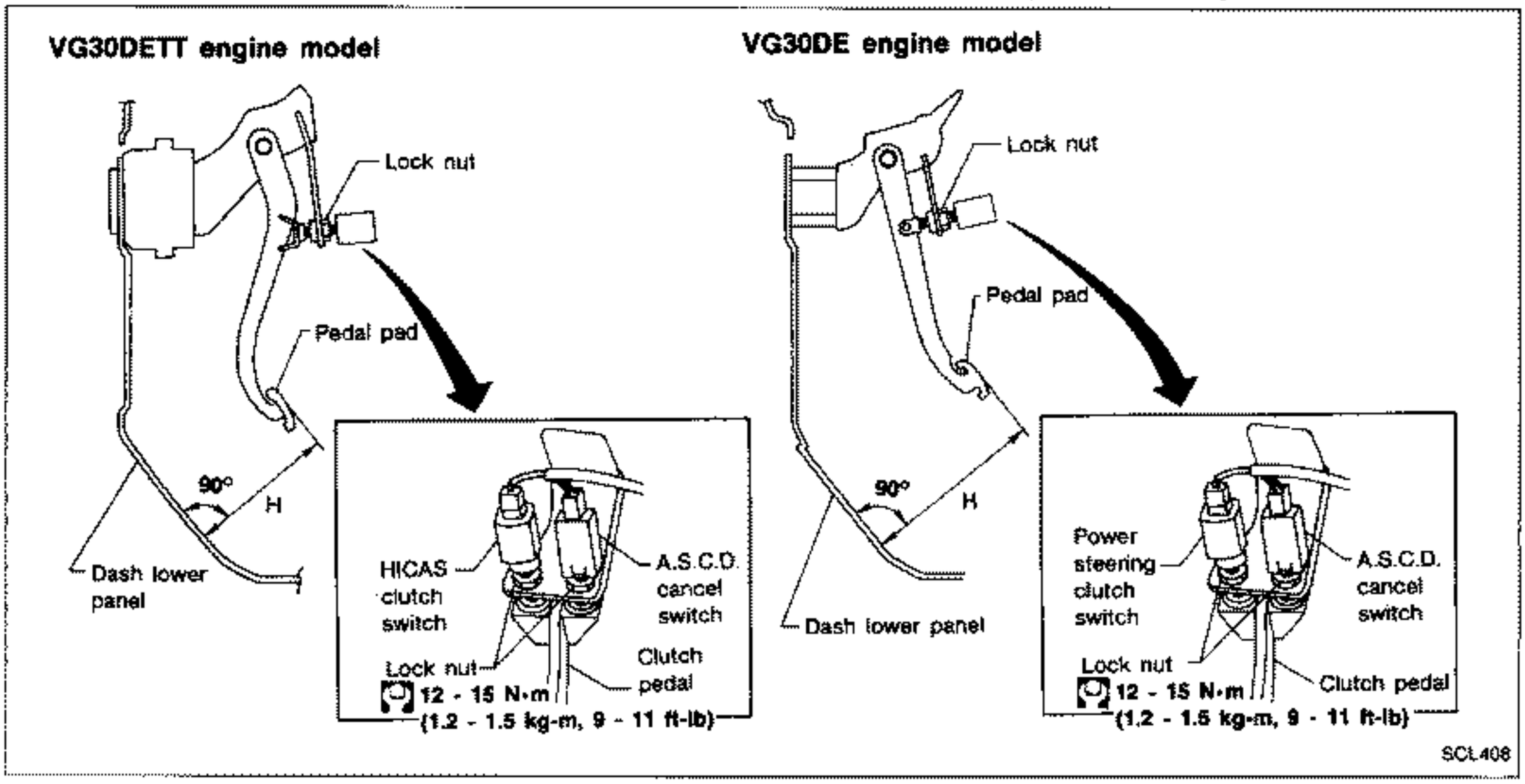

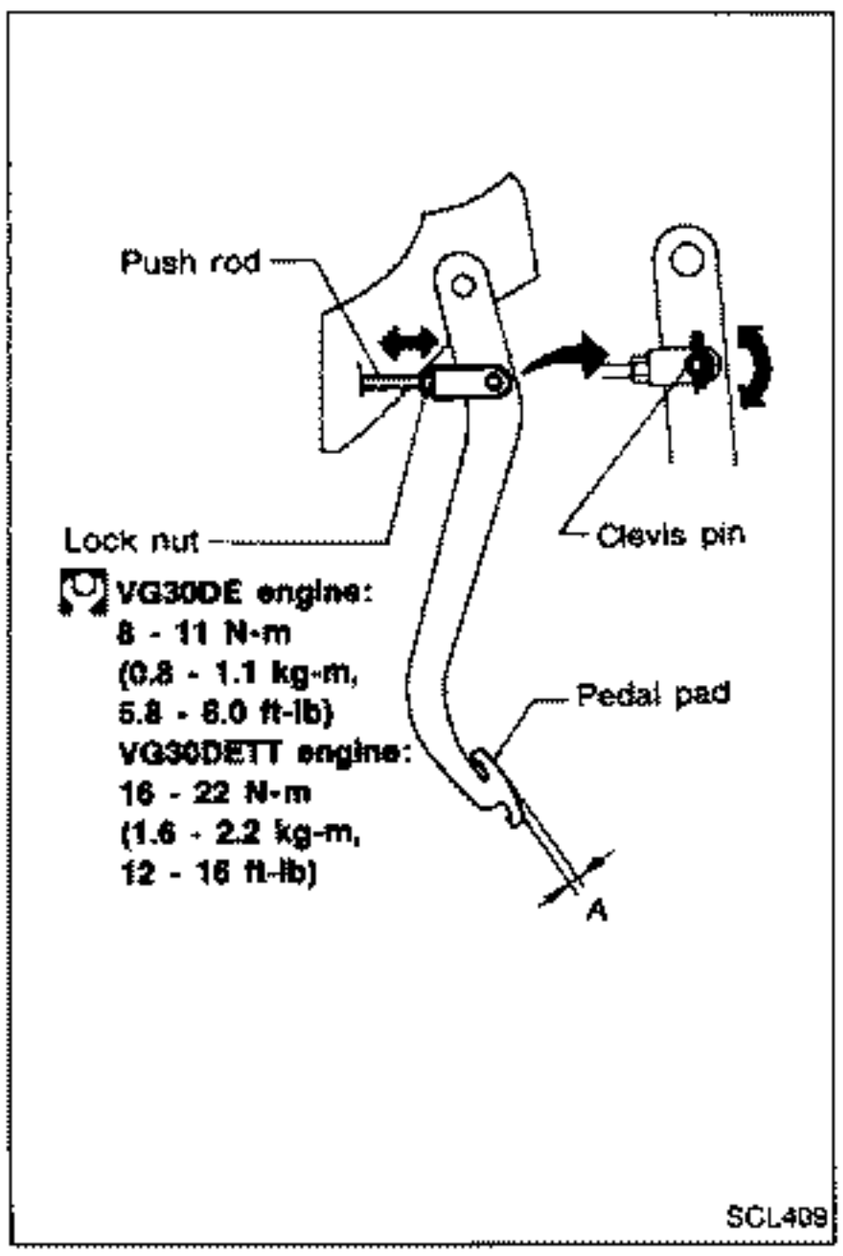

2. Adjust pedal free play with master cylinder push rod. Then tighten lock nut.
   Pedal free play "A":
   1.0 - 3.0 mm (0.039 - 0.118 in)

Pedal free play means the following total measured at position of pedal pad:

- **Play due to clevis pin and clevis pin hole in clutch pedal.**

3. Make sure that clevis pin can rotate smoothly.
   If not, readjust pedal free play with master cylinder push rod.

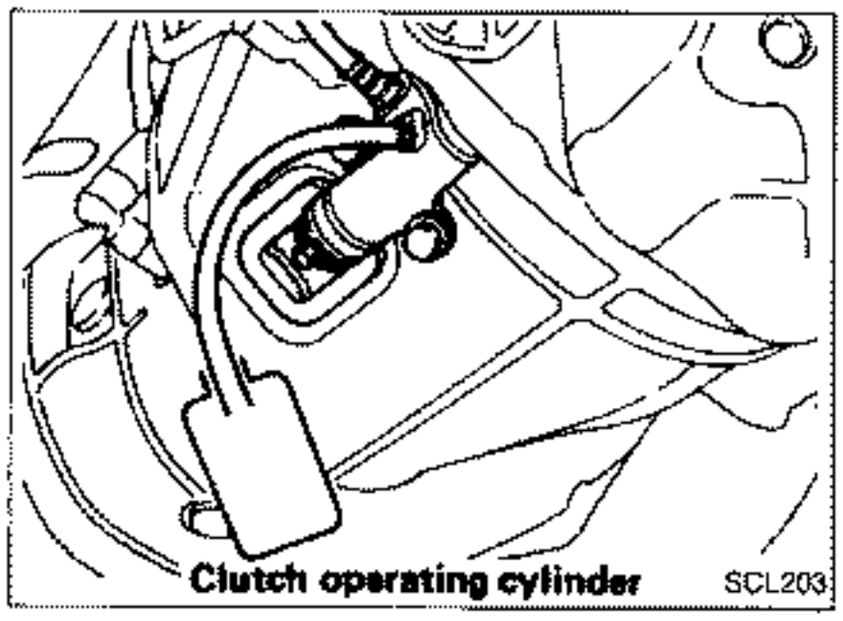
Clutch operating cylinder SCL203

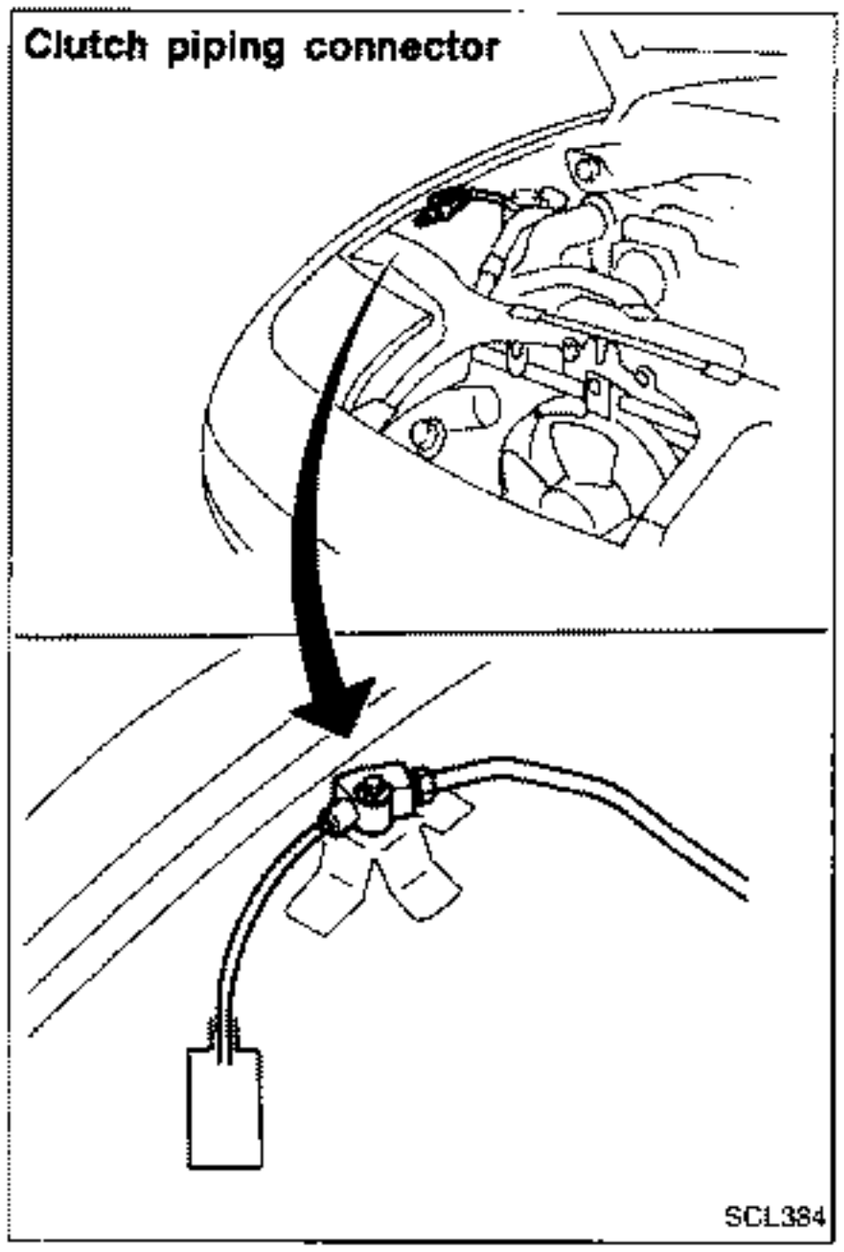

SCL384

Bleeding Procedure

1. Bleed air from clutch operating cylinder according to the following procedure.

- **Carefully monitor fluid level at master cylinder during bleeding operation.**

a. Top up reservoir with recommended brake fluid.
b. Connect a transparent vinyl tube to air bleeder valve.
c. Fully depress clutch pedal several times.
d. With clutch pedal depressed, open bleeder valve to release air.
e. Close bleeder valve.
f. Repeat steps c through e above until brake fluid flows from air bleeder valve without air bubbles.

2. Bleed air from clutch piping connector according to the above procedure.
3. Repeat the above bleeding procedure 1 and 2 several times.

Clutch Master Cylinder

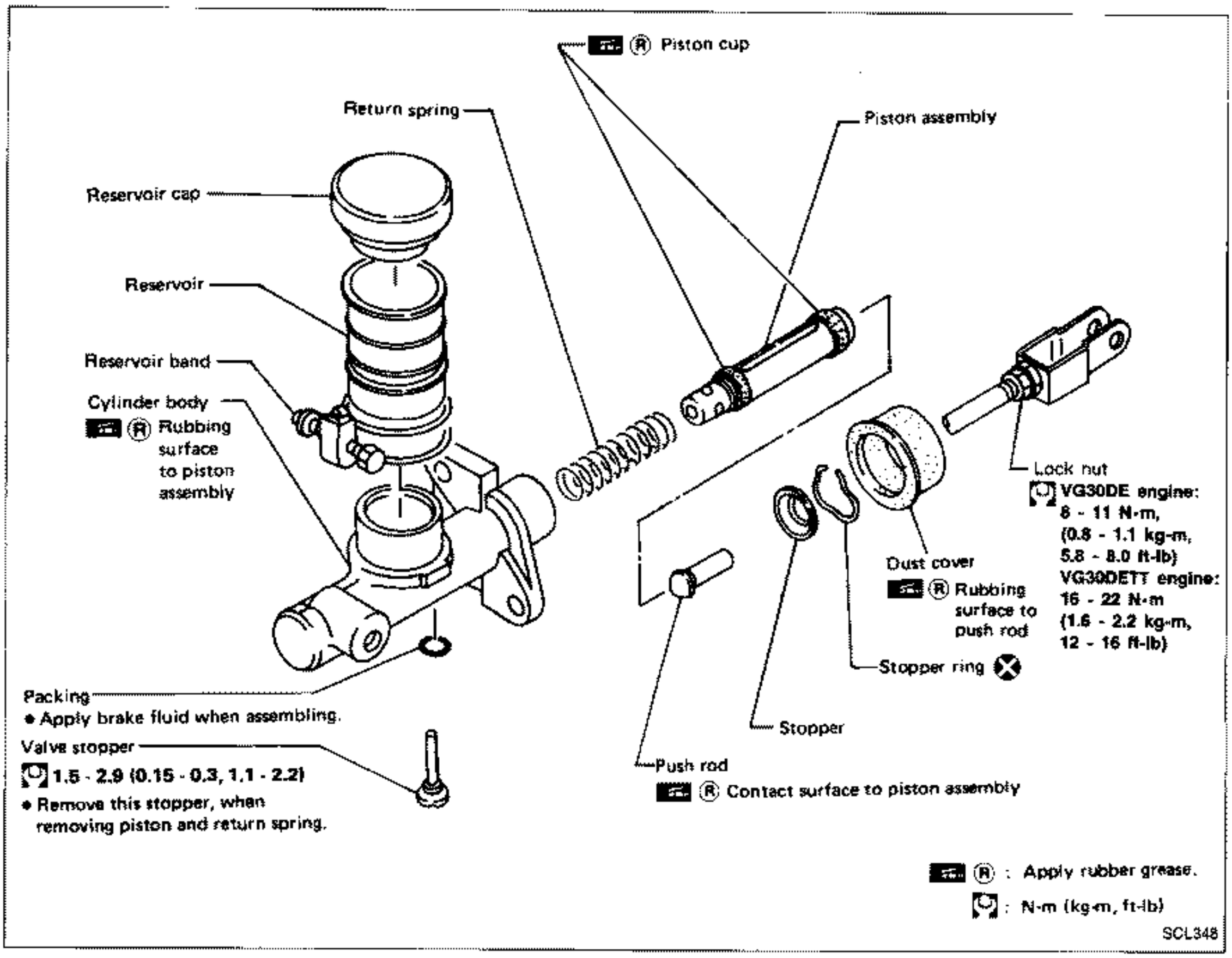

DISASSEMBLY AND ASSEMBLY

- Push piston into cylinder body with screwdriver when removing and installing valve stopper.

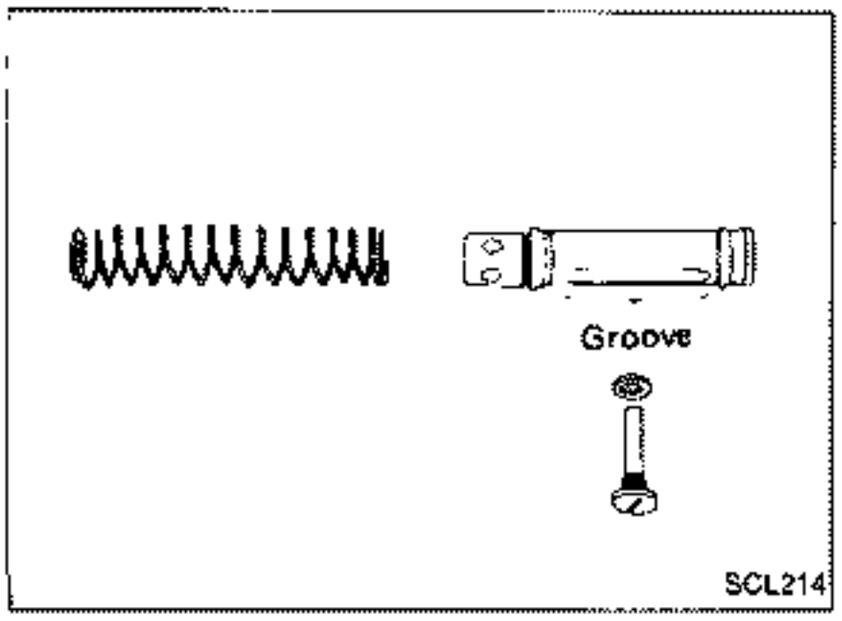

- Align groove of piston assembly and valve stopper when installing valve stopper.
- Check direction of piston cups.

Clutch Master Cylinder (Cont'd)

INSPECTION

- Check cylinder and piston rubbing surface for uneven wear, rust or damage. Replace if necessary.
- Check piston with piston cup for wear or damage. Replace if necessary.
- Check return spring for wear or damage. Replace if necessary.
- Check reservoir for deformation or damage. Replace if necessary.
- Check dust cover for cracks, deformation or damage. Replace if necessary.

Operating Cylinder

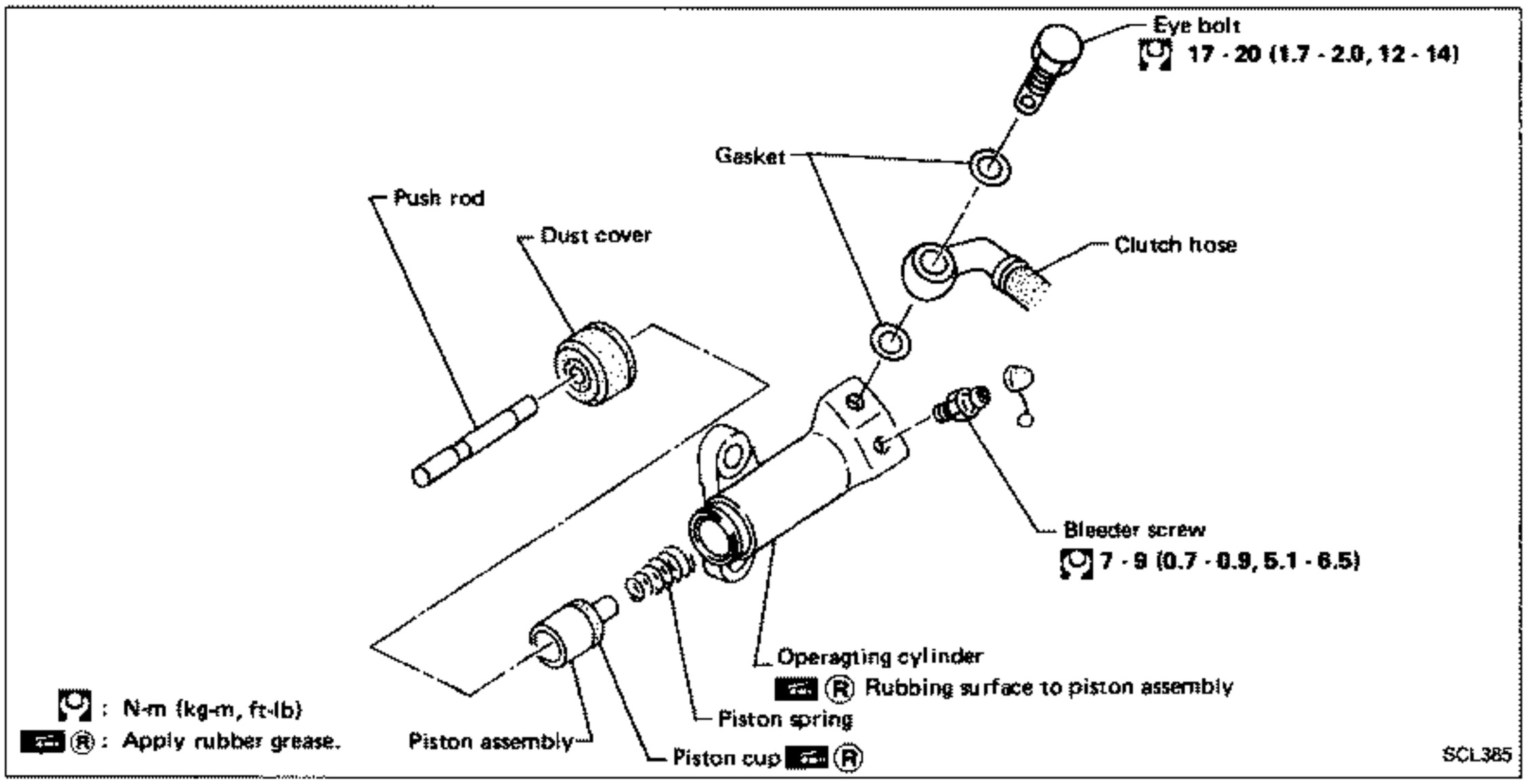

INSPECTION

- Check rubbing surface of cylinder for wear, rust or damage. Replace if necessary.
- Check piston with piston cup for wear or damage. Replace if necessary.
- Check piston spring for wear or damage. Replace if necessary.
- Check dust cover for cracks, deformation or damage. Replace if necessary.

Clutch Booster — VG30DETT Engine Model —

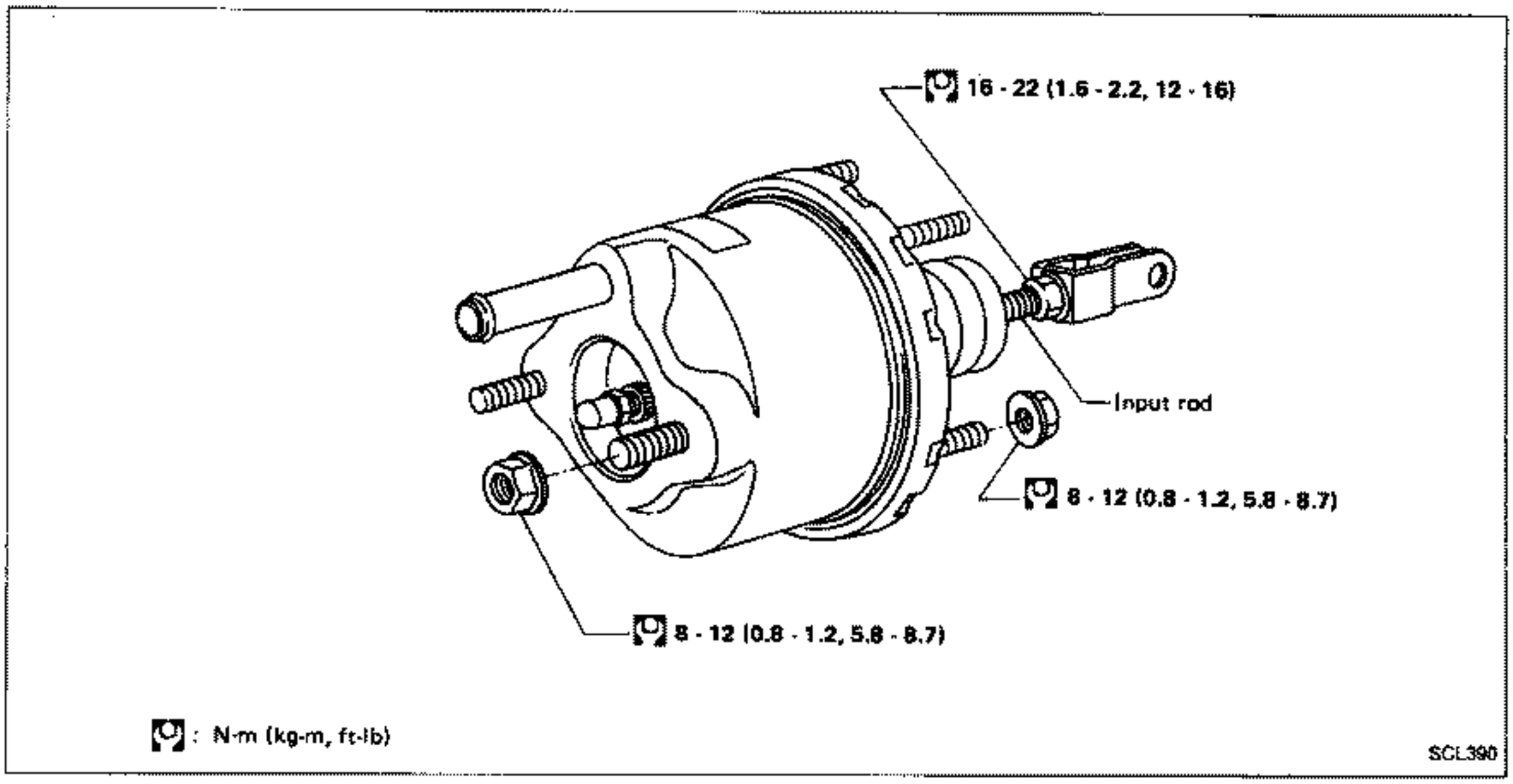

INSPECTION

Hoses and connectors

- Check condition of vacuum hoses and connections.
- Check vacuum hoses and check valve for air tightness.

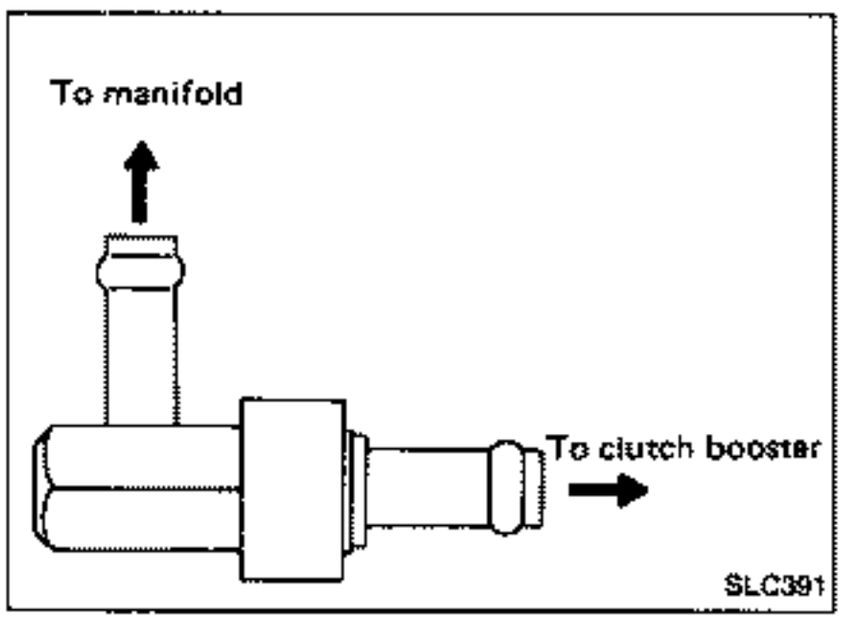

Check valve

- Install check valve properly paying attention to its direction.

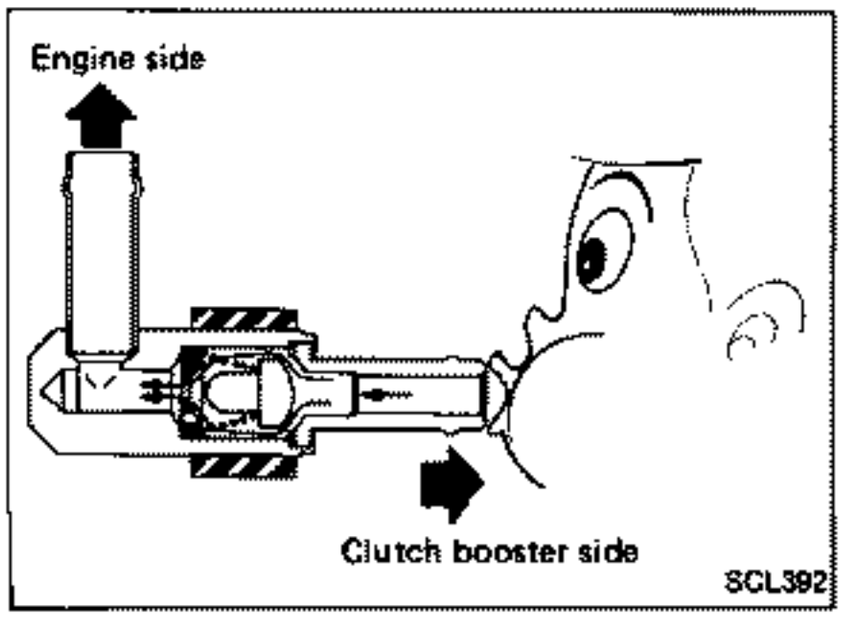

- When pressure is applied to the clutch booster side of check valve and valve does not open, replace check valve with a new one.

Clutch Booster — VG30DETT Engine Model — (Cont'd)

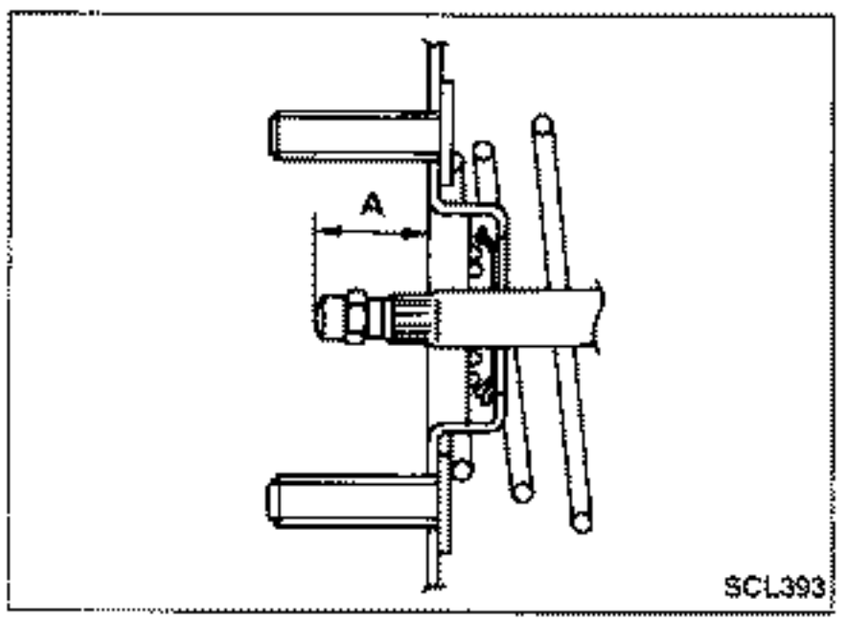

ADJUSTMENT

Output rod length "A":
13.35 - 13.60 mm (0.5256 - 0.5354 in)

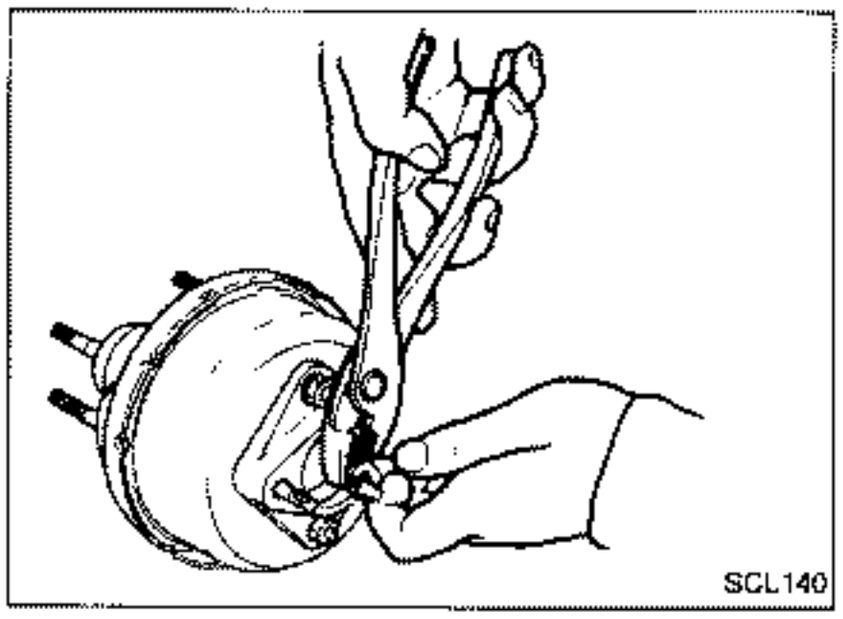

If amount of adjustment required exceeds 0.5 mm (0.020 in), reaction disc may have either been dislocated or fallen off. Replace clutch booster assembly.

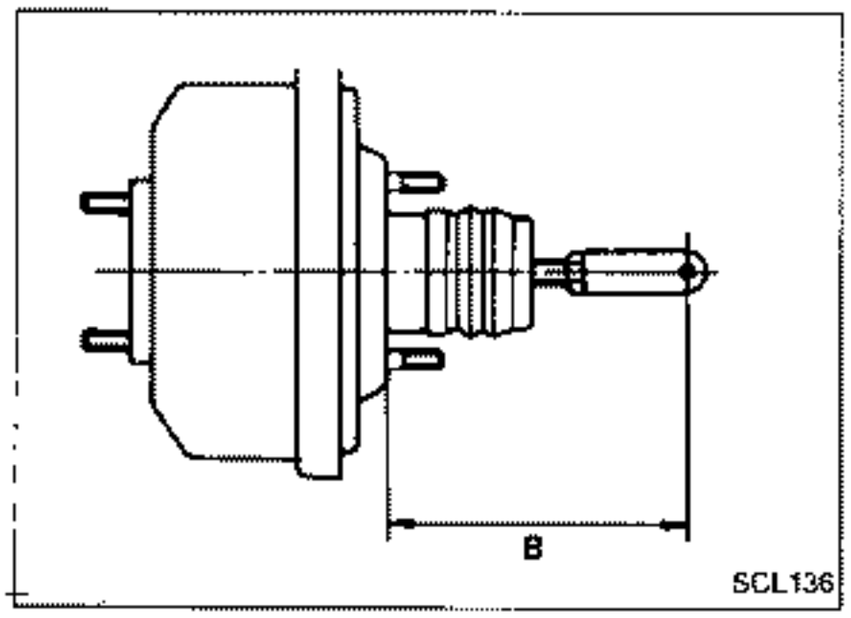

Input rod length "B":
113 mm (4.45 in)

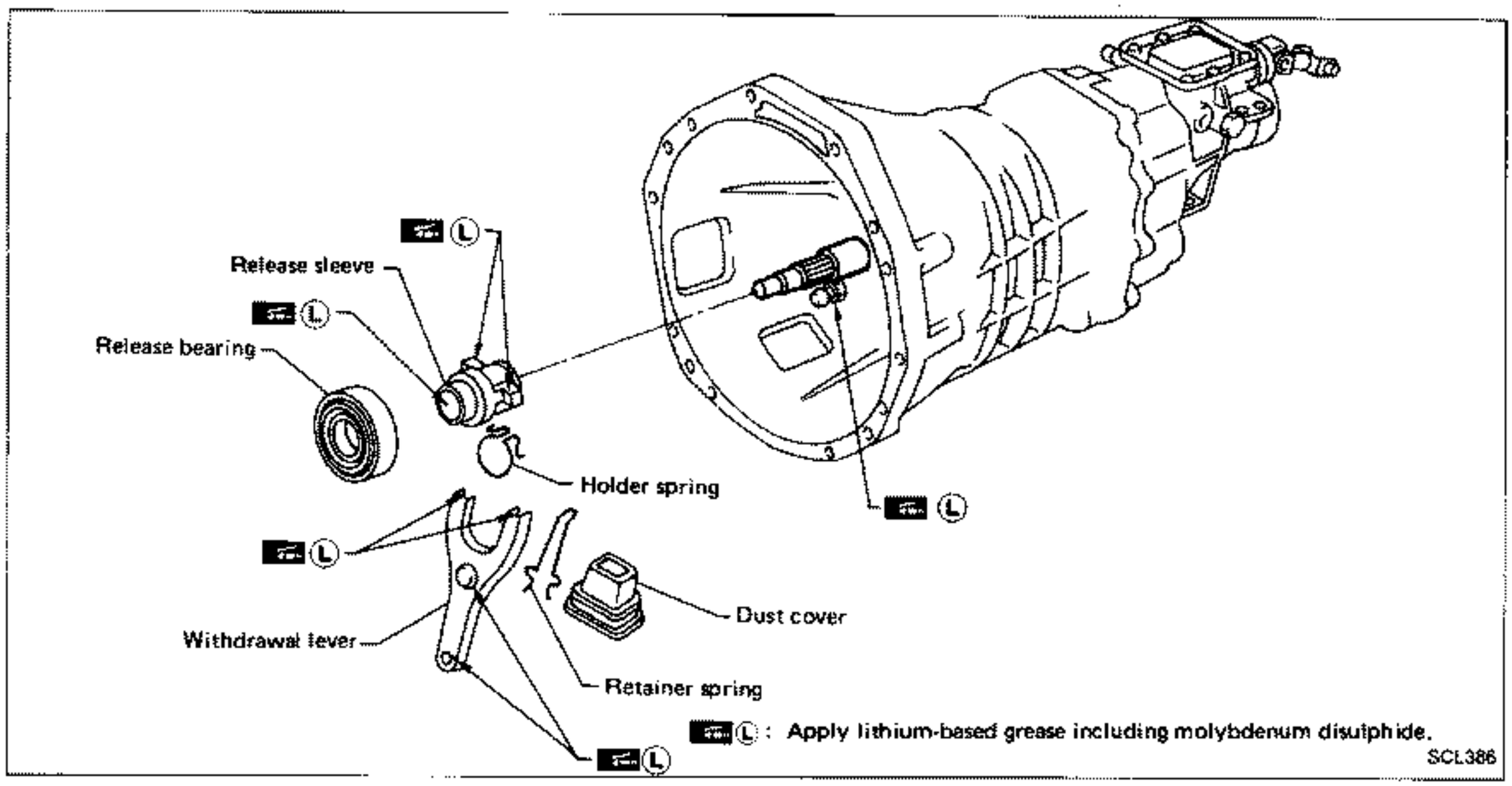

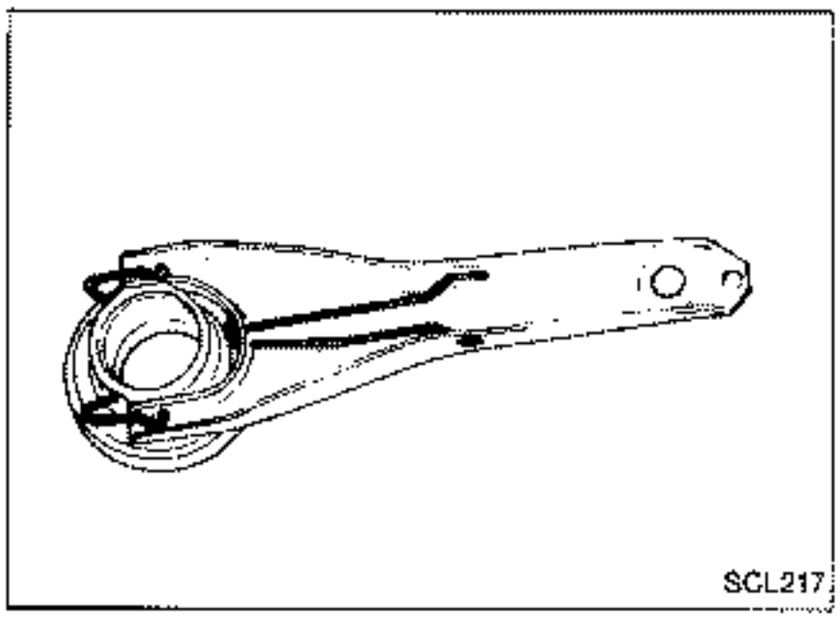

REMOVAL AND INSTALLATION

- Install retainer spring and holder spring.

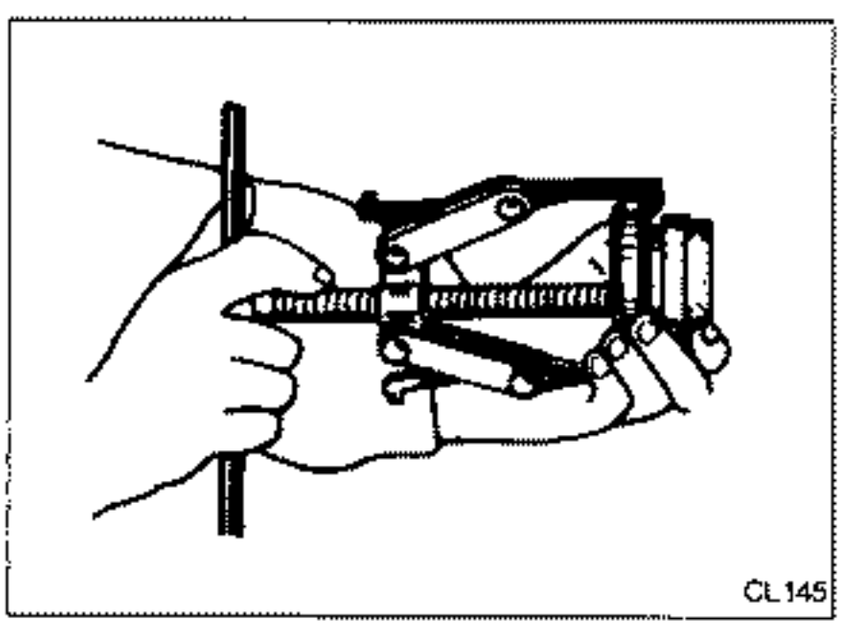

- Remove release bearing.

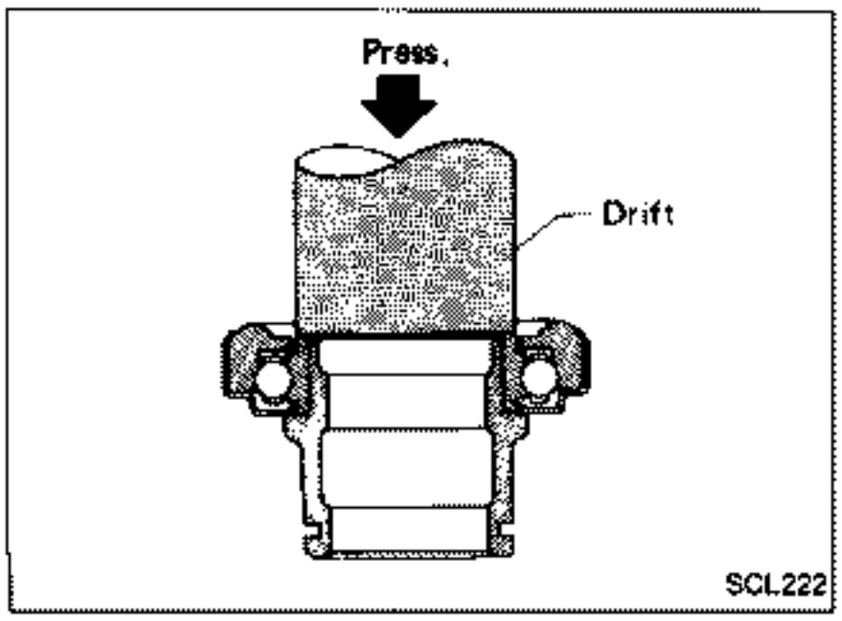

- Install release bearing with a suitable drift.

INSPECTION

- Check release bearing to see that it rolls freely and is free from noise, cracks, pitting or wear. Replace if necessary.
- Check release sleeve and withdrawal lever rubbing surface for wear, rust or damage. Replace if necessary.

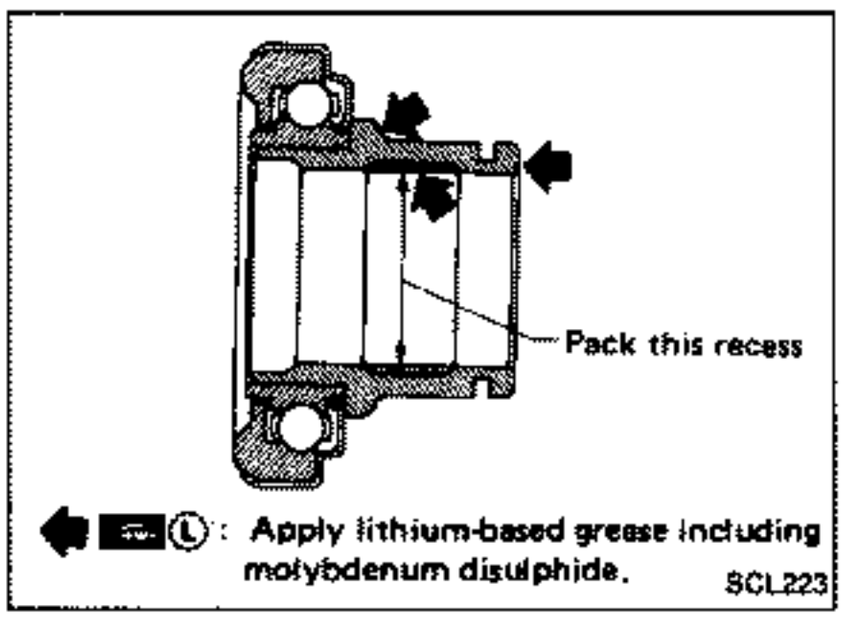

LUBRICATION

- Apply recommended grease to contact surface and rubbing surface.

Too much lubricant might damage clutch disc facing.

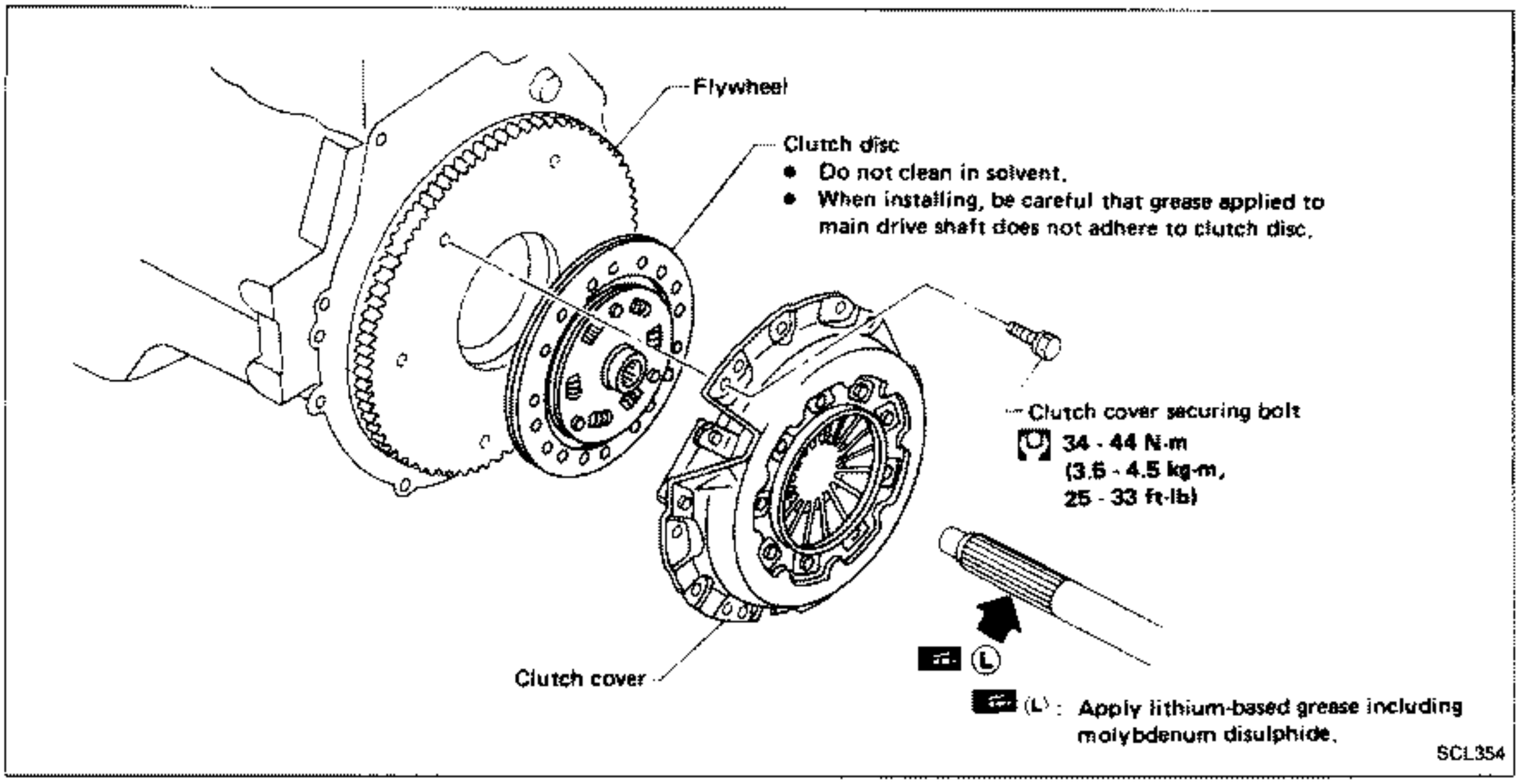

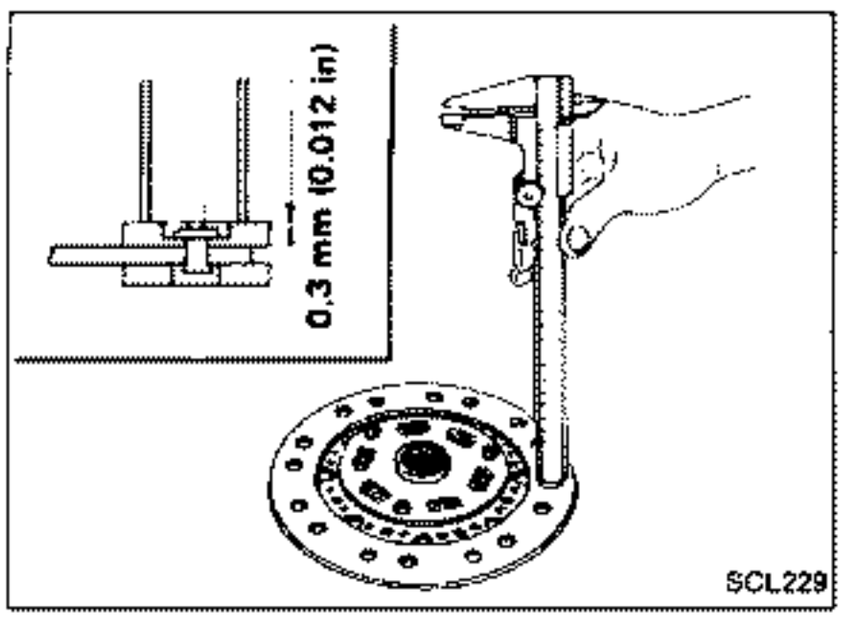

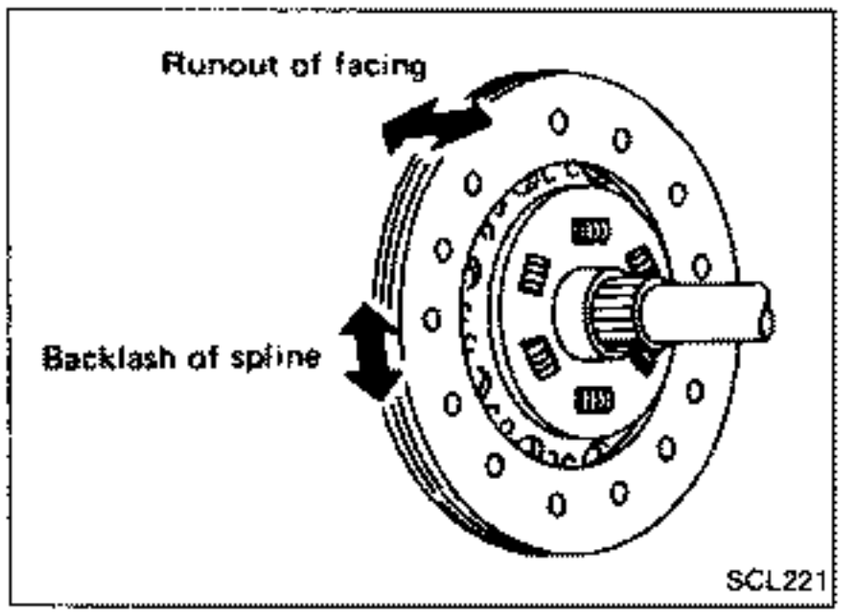

Clutch Disc

INSPECTION

- Check clutch disc for wear of facing.
  Wear limit of facing surface to rivet head:
  0.3 mm (0.012 in)
- Check clutch disc for backlash of spline and runout of facing.
  Maximum backlash of spline (at outer edge of disc):
  1.0 mm (0.039 in)
  Runout limit:
  1.0 mm (0.039 in)
  Distance of runout check point (from hub center):
  VG30DE engine
  115 mm (4.53 in)
  VG30DETT engine
  120 mm (4.72 in)
- Check clutch disc for burns, discoloration or oil or grease leakage. Replace if necessary.

INSTALLATION

- Apply recommended grease to contact surface of spring portion.

Too much lubricant might damage clutch disc facing.

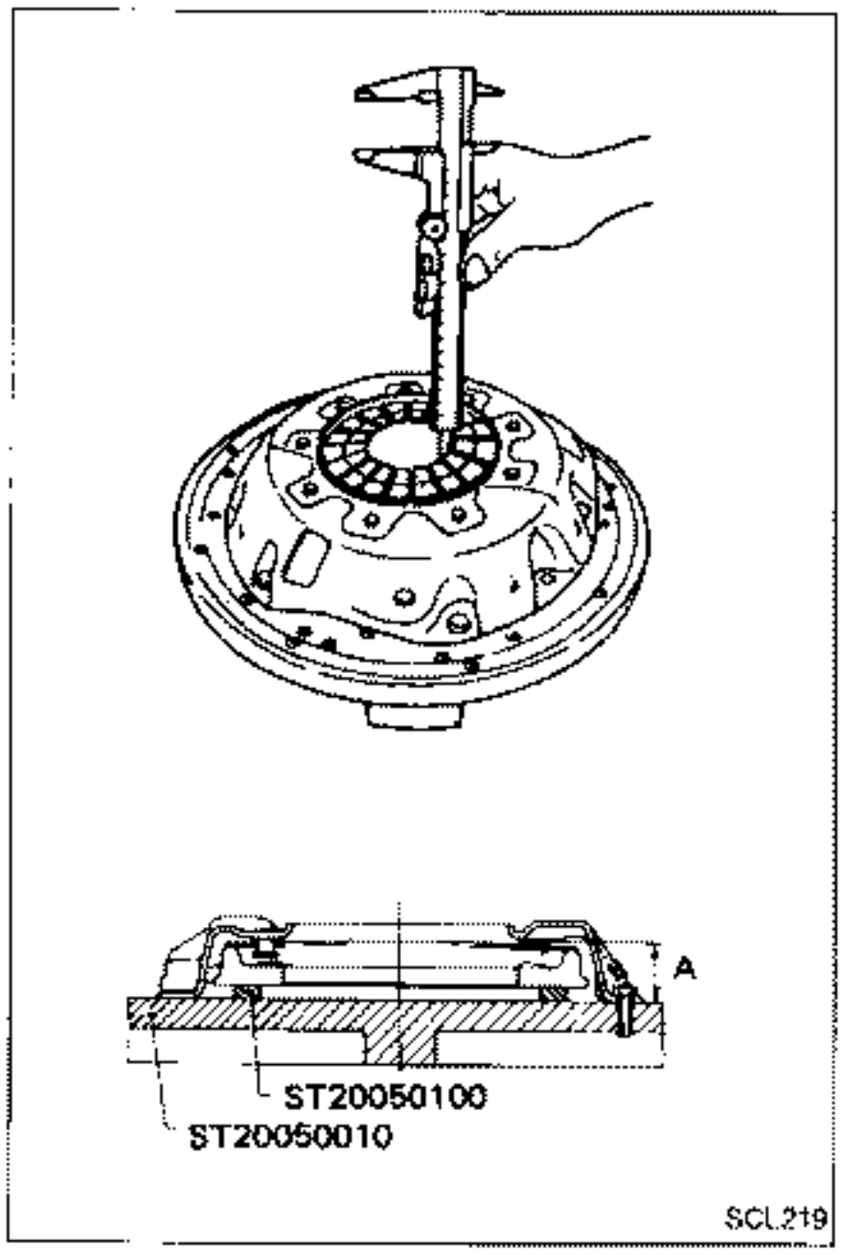

Clutch Cover and Flywheel

INSPECTION AND ADJUSTMENT

- Set Tool and check height and unevenness of diaphragm spring.
  Diaphragm spring height "A":
  VG30DE engine
  37.5 - 39.5 mm (1.476 - 1.555 in)
  VG30DETT engine
  36.5 - 38.5 mm (1.437 - 1.516 in)
- **Set 0.5 mm (0.020 in) feeler gauges on distance pieces (ST20050100) when checking diaphragm spring height.**
- Check thrust rings for wear or damage by shaking cover assembly and listening for chattering noise, or lightly hammering on rivets for a slightly cracked noise. Replace clutch cover assembly if necessary.
- Check pressure plate and clutch disc contact surface for slight burns or discoloration. Repair pressure plate with emery paper.
- Check pressure plate and clutch disc contact surface for deformation or damage. Replace if necessary.

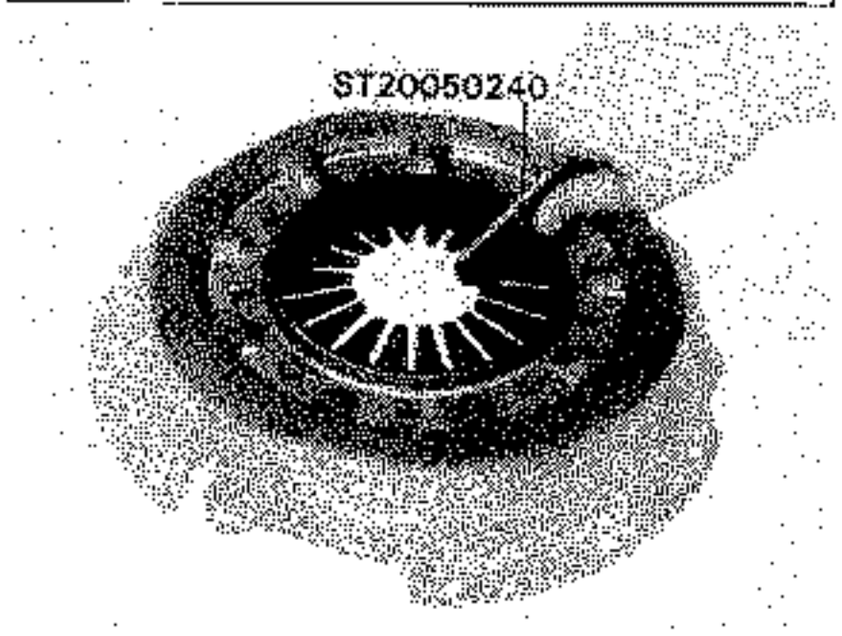

- Adjust unevenness of diaphragm spring with Tool.
  Uneven limit: 0.5 mm (0.020 in)

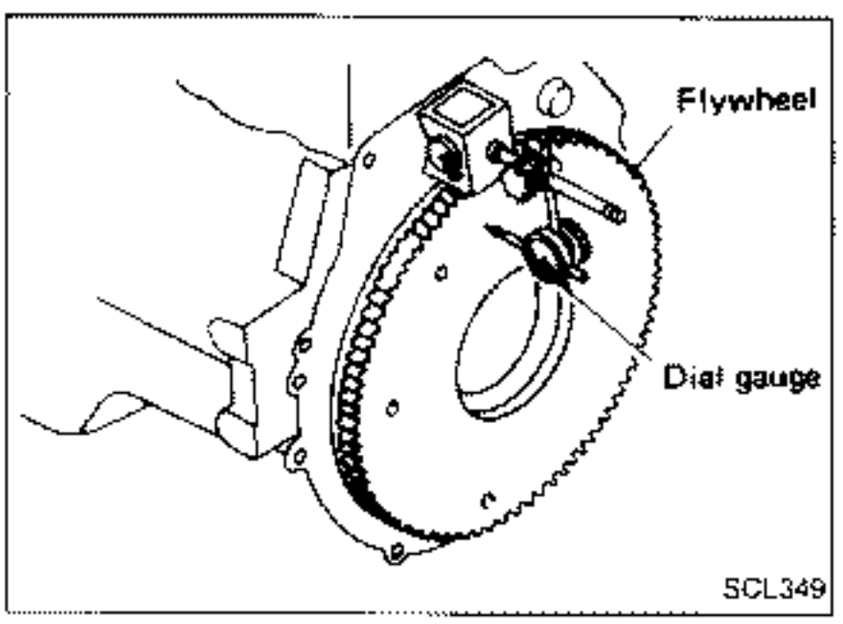

FLYWHEEL INSPECTION

- Check contact surface of flywheel for slight burns or discoloration. Repair flywheel with emery paper.
- Check flywheel runout.
  Runout (Total indicator reading):
  Less than 0.15 mm (0.0059 in)

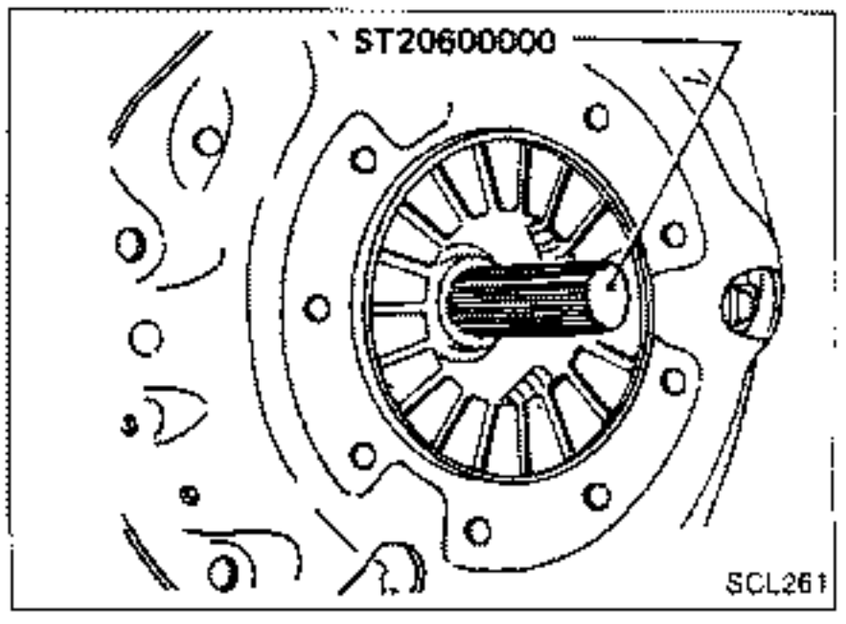

INSTALLATION

- Insert Tool into clutch disc hub when installing clutch cover and disc.

General Specifications

CLUTCH CONTROL SYSTEM

Type of clutch control	Hydraulic

CLUTCH MASTER CYLINDER

Inner diameter	mm (in)	15.87 (5/8)

CLUTCH OPERATING CYLINDER

Inner diameter	mm (in)	19.05 (3/4)

CLUTCH DISC

Model	240TBL	250TBL
Engine	VG30DE	VG30DETT
Facing size (Outer dia. x inner dia. x thickness) mm (in)	240 x 160 x 3.5 (9.45 x 6.30 x 0.138)	250 x 160 x 3.5 (9.84 x 6.30 x 0.138)
Thickness of disc assembly With load mm (in)	8.1 - 8.5 (0.319 - 0.335) with 4,904 N (500 kg, 1,103 lb)	

CLUTCH COVER

Model	C240S	C250S
Engine	VG30DE	VG30DETT
Full load N (kg, lb)	5,688 (580, 1,279)	7,846 (800, 1,764)

CLUTCH BOOSTER (VG30DETT engine model)

Model	M45
Diaphragm diameter mm (in)	114.3 (4.50)

Inspection and Adjustment

CLUTCH PEDAL

Unit: mm (in)

Engine	VG30DE	VG30DETT
Pedal height "H"*		
L.H.D.	—	183 - 193 (7.20 - 7.60)
R.H.D.	211 - 221 (8.31 - 8.70)	197 - 207 (7.76 - 8.15)
Pedal free play (Backlash at clevis)	1.0 - 3.0 (0.039 - 0.118)	

*: Measured from surface of dash lower panel to pedal pad

CLUTCH DISC

Unit: mm (in)

Model	240TBL	250TBL
Wear limit of facing surface to rivet head	0.3 (0.012)	
Runout limit of facing	1.0 (0.039)	
Distance of runout check point (from the hub center)	115 (4.53)	120 (4.72)
Maximum backlash of spline (at outer edge of disc)	1.0 (0.039)	

CLUTCH COVER

Unit: mm (in)

Model	C240S	C250S
Diaphragm spring height	37.5 - 39.5 (1.476 - 1.555)	36.5 - 38.5 (1.437 - 1.516)
Uneven limit of diaphragm spring toe height	0.5 (0.020)	

CLUTCH BOOSTER

Unit: mm (in)

Output rod length "A"	13.35 - 13.60 (0.5256 - 0.5354)
Input rod length "B"	113 (4.45)

MANUAL TRANSMISSION

SECTION MT

CONTENTS

PREPARATION ..... MT- 2
ON-VEHICLE SERVICE ..... MT- 4
REMOVAL AND INSTALLATION ..... MT- 5
MAJOR OVERHAUL ..... MT- 7
DISASSEMBLY MT-12
INSPECTION MT-20
ASSEMBLY MT-22
TRANSMISSION OIL COOLER SYSTEM MT-34
SERVICE DATA AND SPECIFICATIONS (S.D.S.) MT-35

SPECIAL SERVICE TOOLS

Tool number Tool name	Description	
ST23540000 Pin punch		Removing and installing retaining pin
ST30031000 Puller	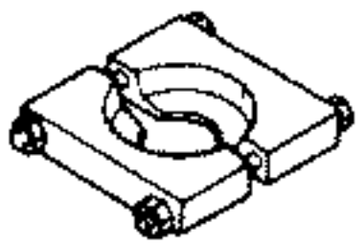	Removing 1st & 2nd synchronizer assembly Removing counter gear rear thrust bearing Removing main drive bearing Measuring 2nd & 3rd inner baulk ring
ST33290001 Puller		Removing rear oil seal
ST33230000 Drift	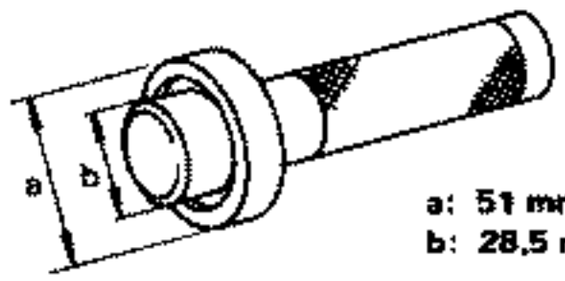 a: 51 mm (2.01 in) dia. b: 28.5 mm (1.122 in) dia.	Removing mainshaft and counter gear
ST22350000 Drift	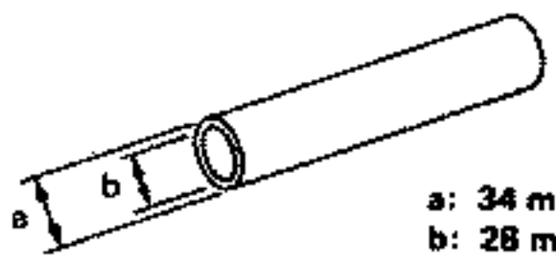 a: 34 mm (1.34 in) dia. b: 28 mm (1.10 in) dia.	Removing counter gear front bearing (Use with KV38100300)
KV38100300 Drift	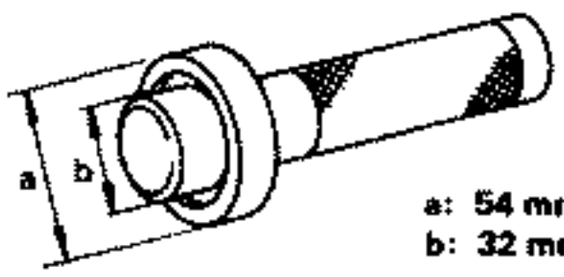 a: 54 mm (2.13 in) dia. b: 32 mm (1.26 in) dia.	Removing counter gear front bearing (Use with ST22350000) Installing counter gear rear bearing
ST30720000 Drift	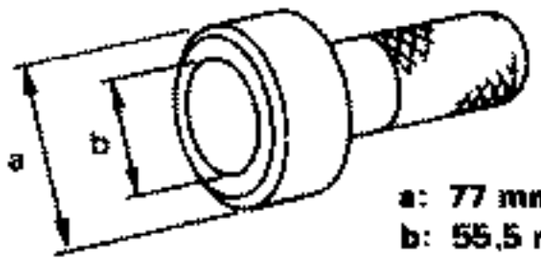 a: 77 mm (3.03 in) dia. b: 55.5 mm (2.185 in) dia.	Removing mainshaft front bearing Installing mainshaft front bearing
ST33210000 Drift	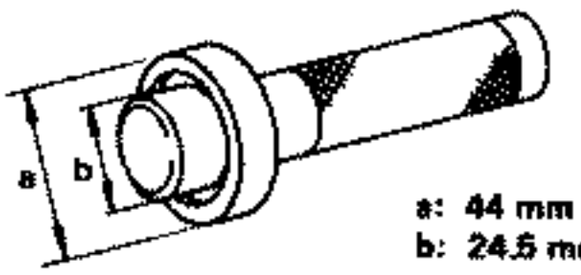 a: 44 mm (1.73 in) dia. b: 24.5 mm (0.965 in) dia.	Installing counter gear front bearing Installing front cover oil seal

Tool number Tool name	Description	
ST30613000 Drift	 a: 72 mm (2.83 in) dia. b: 48 mm (1.89 in) dia.	Installing main drive gear bearing
ST37750000 Drift	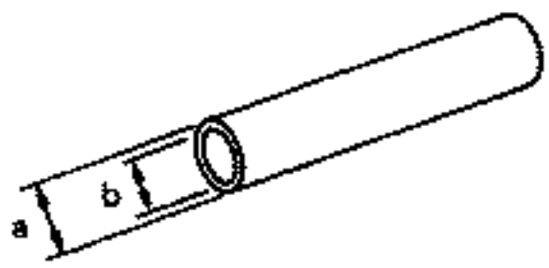 a: 40 mm (1.57 in) dia. b: 31 mm (1.22 in) dia.	Removing counter gear rear bearing Installing O.D. gear bushing Installing reverse cone Installing reverse counter gear Installing counter gear rear end bearing
ST22452000 Drift	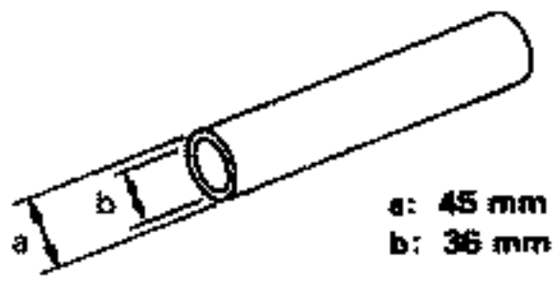 a: 45 mm (1.77 in) dia. b: 36 mm (1.42 in) dia.	Installing reverse hub Installing mainshaft rear bearing
ST33400001 Drift	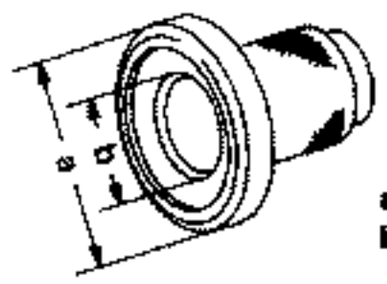 a: 60 mm (2.36 in) dia. b: 47 mm (1.85 in) dia.	Installing rear oil seal
ST36730000 Drift	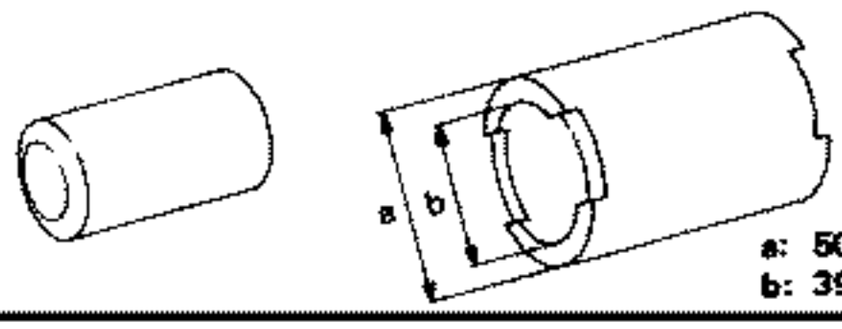 a: 50 mm (1.97 in) dia. b: 39 mm (1.54 in) dia.	Installing sub-gear on reverse idler gear

COMMERCIAL SERVICE TOOLS

Tool name	Description	
Puller	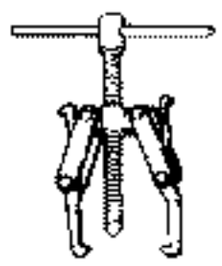	Removing counter gear rear end bearing Removing mainshaft rear bearing Removing reverse synchronizer hub Removing reverse counter gear
Drift	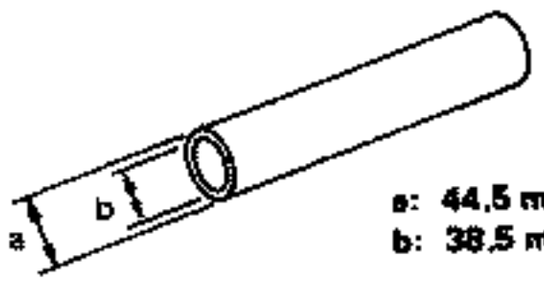 a: 44.5 mm (1.752 in) dia. b: 38.5 mm (1.516 in) dia.	Installing sub-gear snap ring
Drift	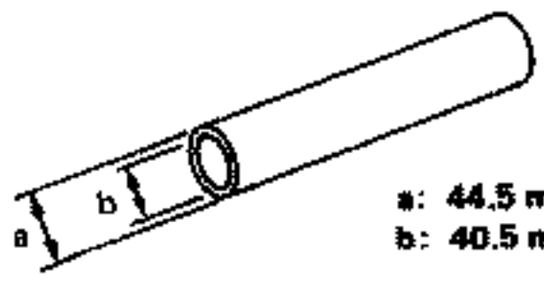 a: 44.5 mm (1.752 in) dia. b: 40.5 mm (1.584 in) dia.	Installing O.D. main gear Installing reverse gear bushing

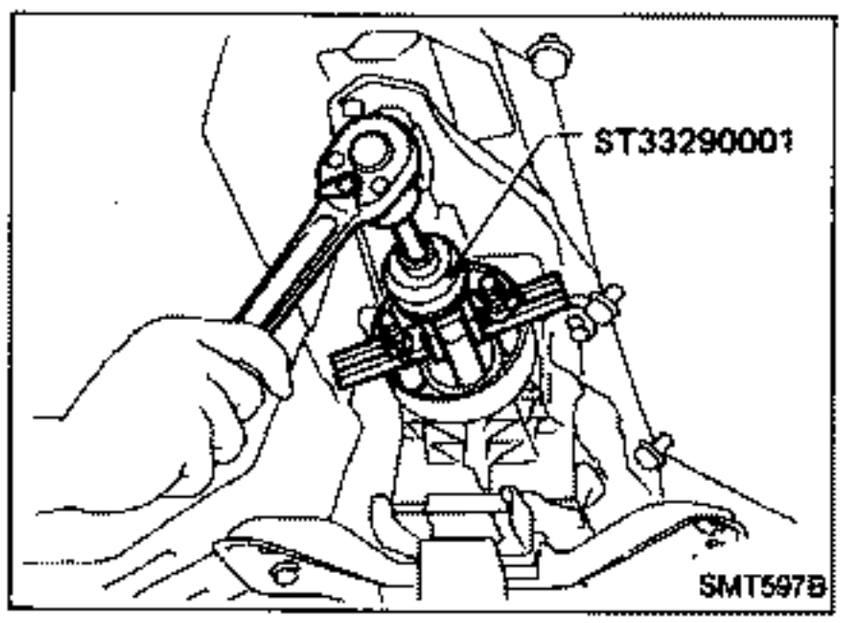

Replacing Rear Oil Seal

REMOVAL

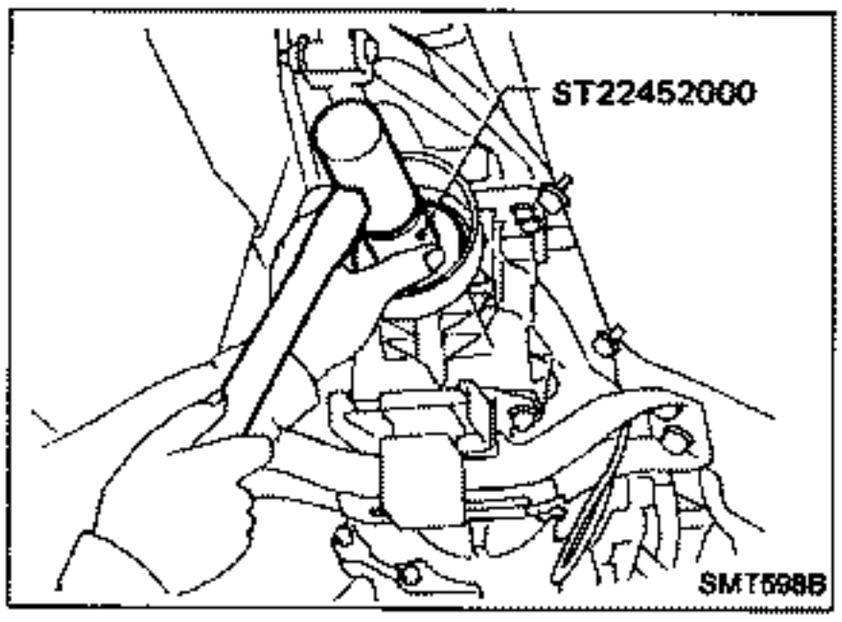

INSTALLATION

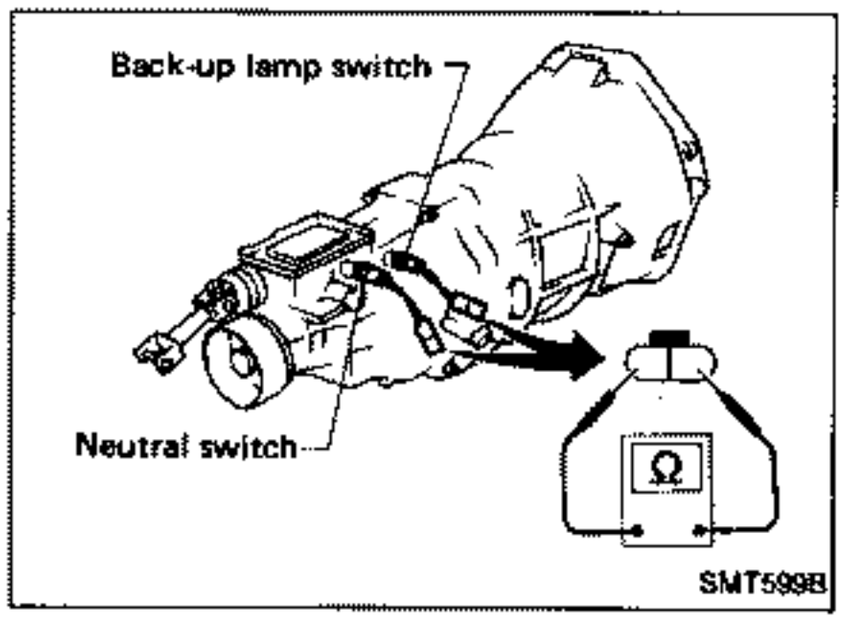

Position Switch Check

BACK-UP LAMP SWITCH

- Check continuity.

Gear position	Continuity
Reverse	Yes
Except reverse	No

NEUTRAL SWITCH

- Check continuity.

Gear position	Continuity
Neutral	Yes
Except neutral	No

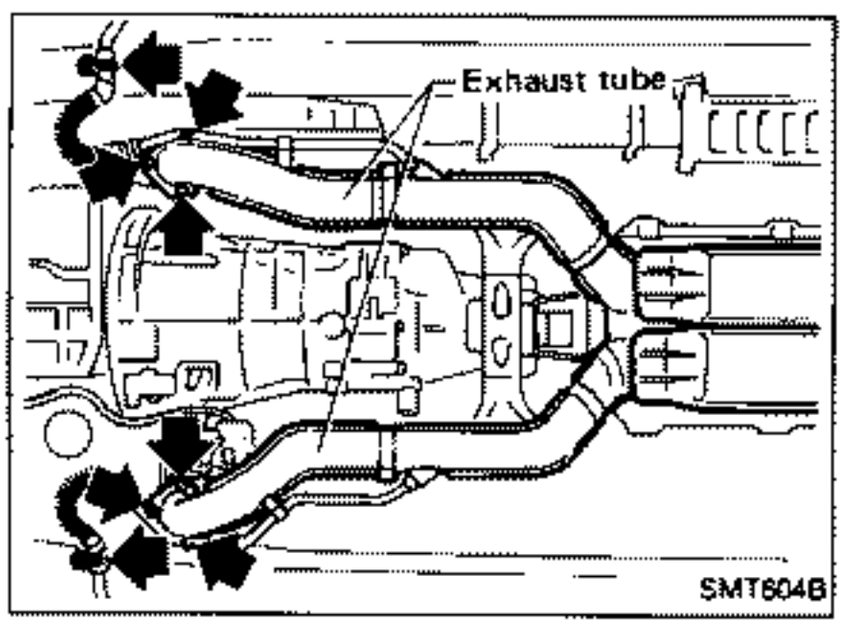

Removal

- Remove exhaust tube.

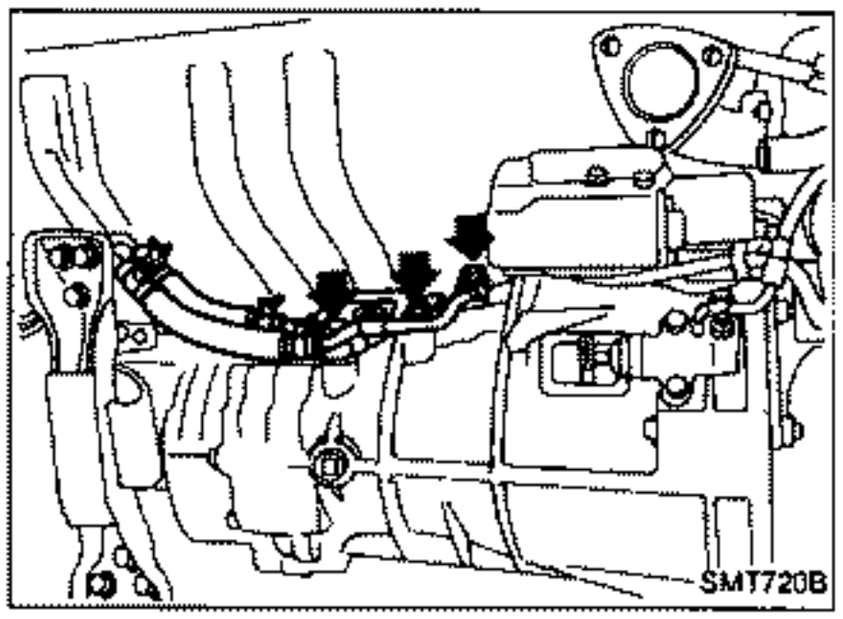

Oil cooler equipped model only

- Drain gear oil.
- Disconnect oil tubes from transmission case.

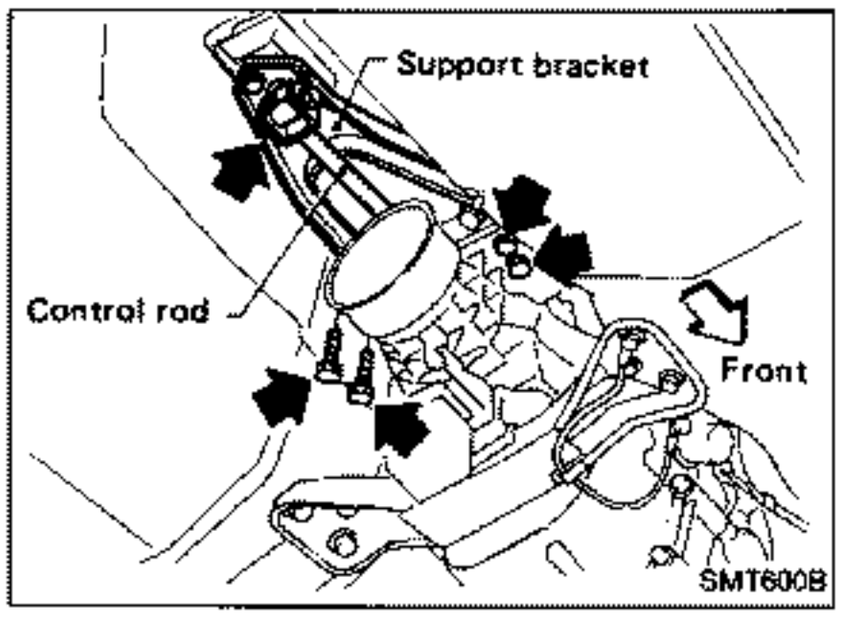

- Remove support bracket from M/T assembly.
- Remove control rod from shift lever.

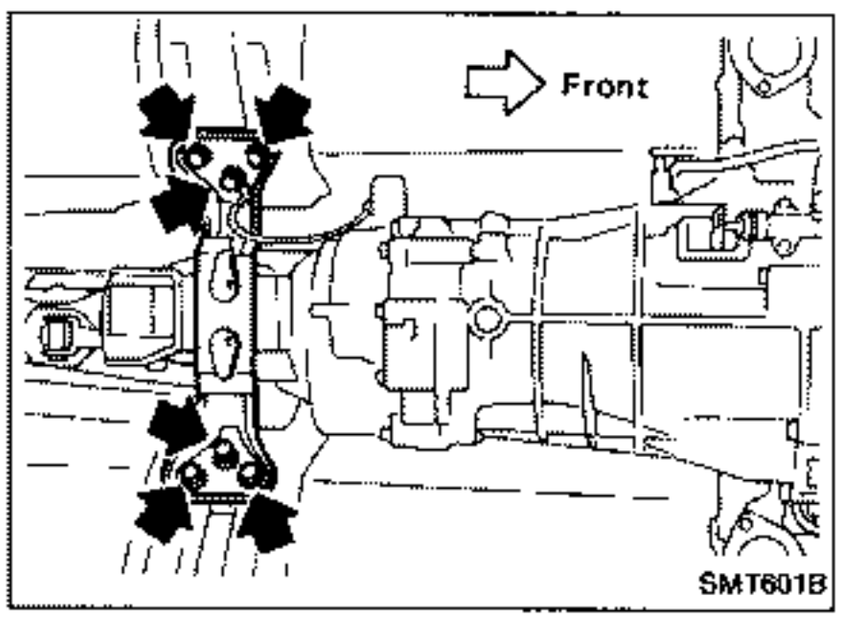

- Remove propeller shaft — Refer to section PD.
- **Insert plug into rear oil seal after removing propeller shaft.**
- **Be careful not to damage spline, sleeve yoke and rear oil seal when removing propeller shaft.**
- Disconnect back-up lamp switch and neutral switch harness connectors.
- Support manual transmission with a jack.
- Remove rear mounting.

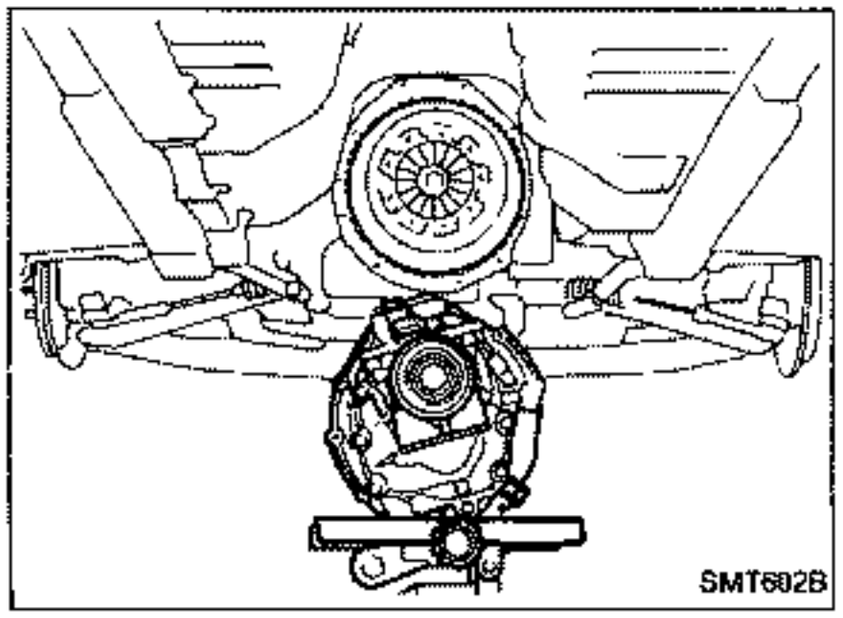

- Lower manual transmission.

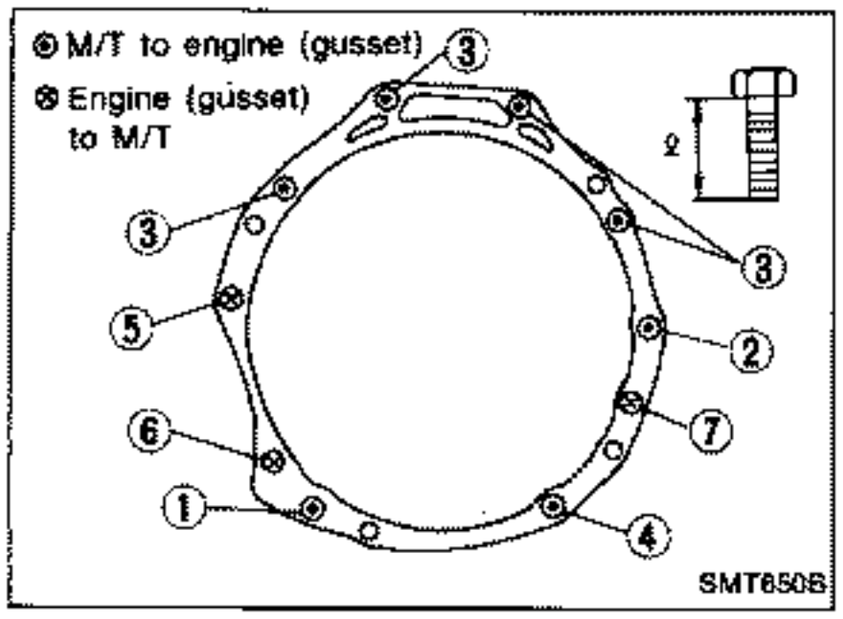

Installation

- Tighten all transmission bolts.

Bolt No.	Tightening torque N·m (kg-m, ft-lb)	ℓ mm (in)
①	39 - 49 (4.0 - 5.0, 29 - 36)	100 (3.94)
②	39 - 49 (4.0 - 5.0, 29 - 36)	65 (2.56)
③	39 - 49 (4.0 - 5.0, 29 - 36)	60 (2.36)
④	29 - 39 (3.0 - 4.0, 22 - 29)	60 (2.36)
⑤	29 - 39 (3.0 - 4.0, 22 - 29)	55 (2.17)
⑥	39 - 49 (4.0 - 5.0, 29 - 36)	25 (0.98)
⑦	29 - 39 (3.0 - 4.0, 22 - 29)	25 (0.98)

- Fill with gear oil. (Oil cooler equipped model only)

Refer to MA section.

Case Components

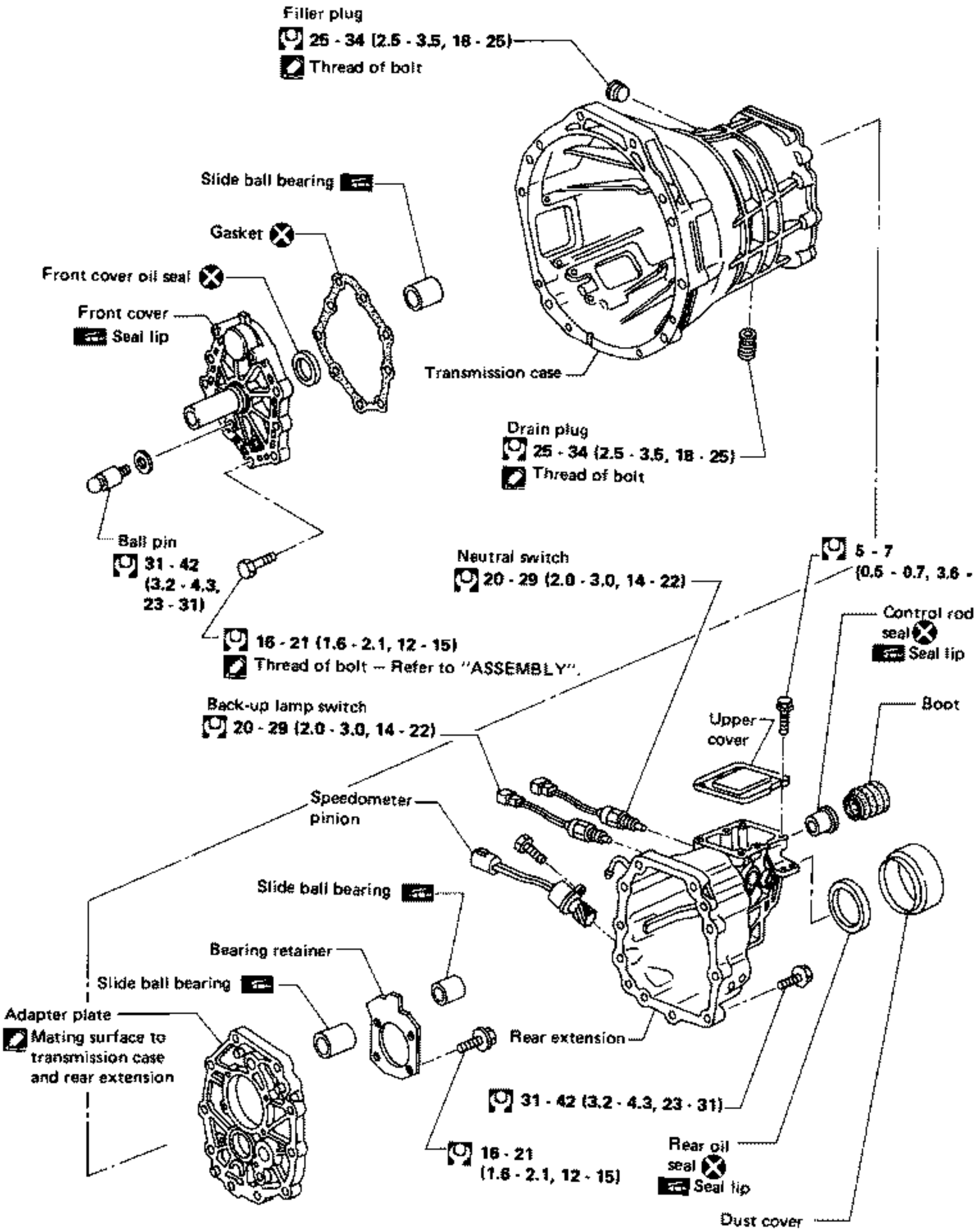

: N·m (kg-m, ft-lb)
: Apply recommended sealant (Nissan genuine Part: KP610-00250) or equivalent.

SMT606B

Gear Components

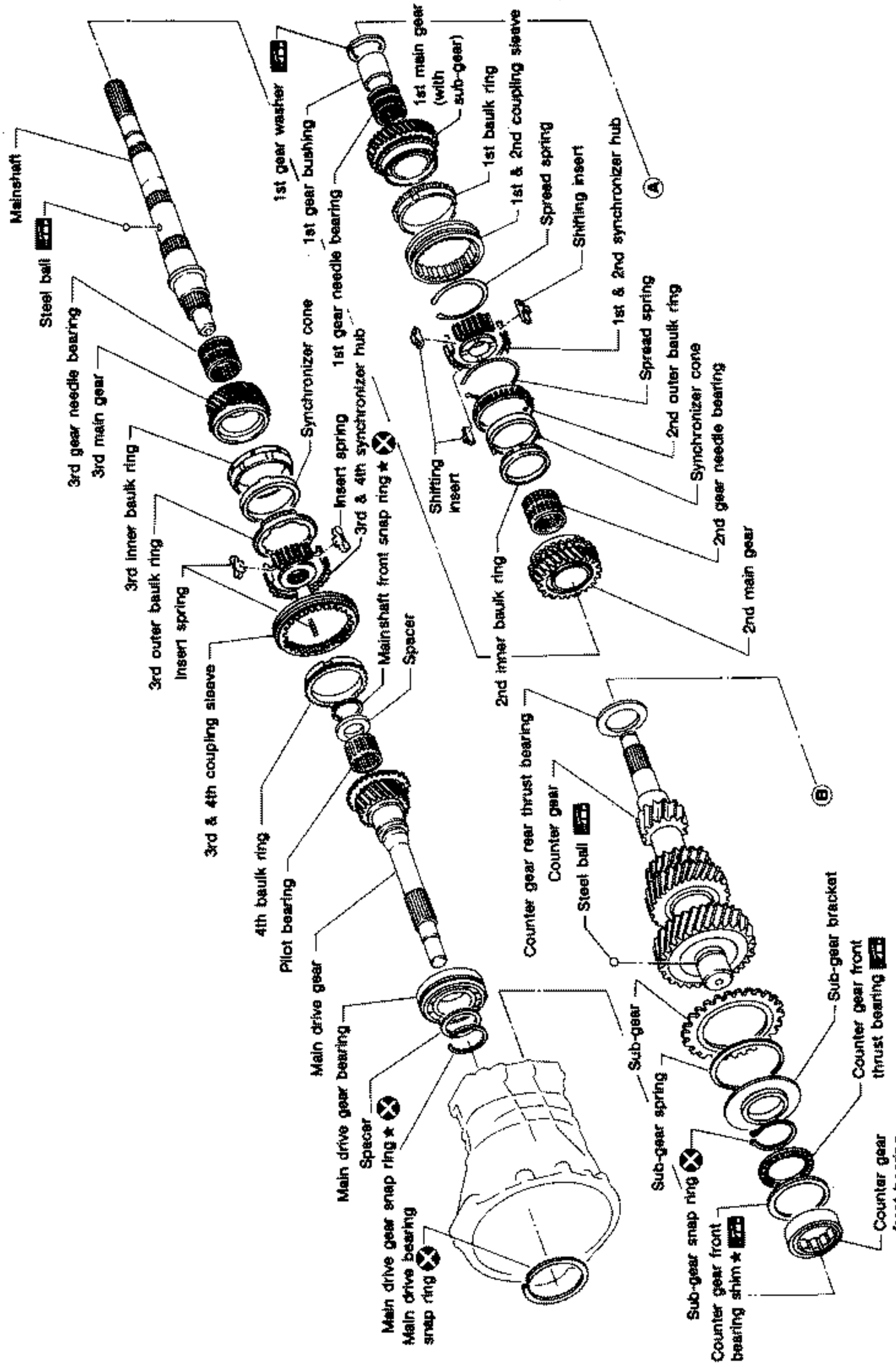

Gear Components (Cont'd)

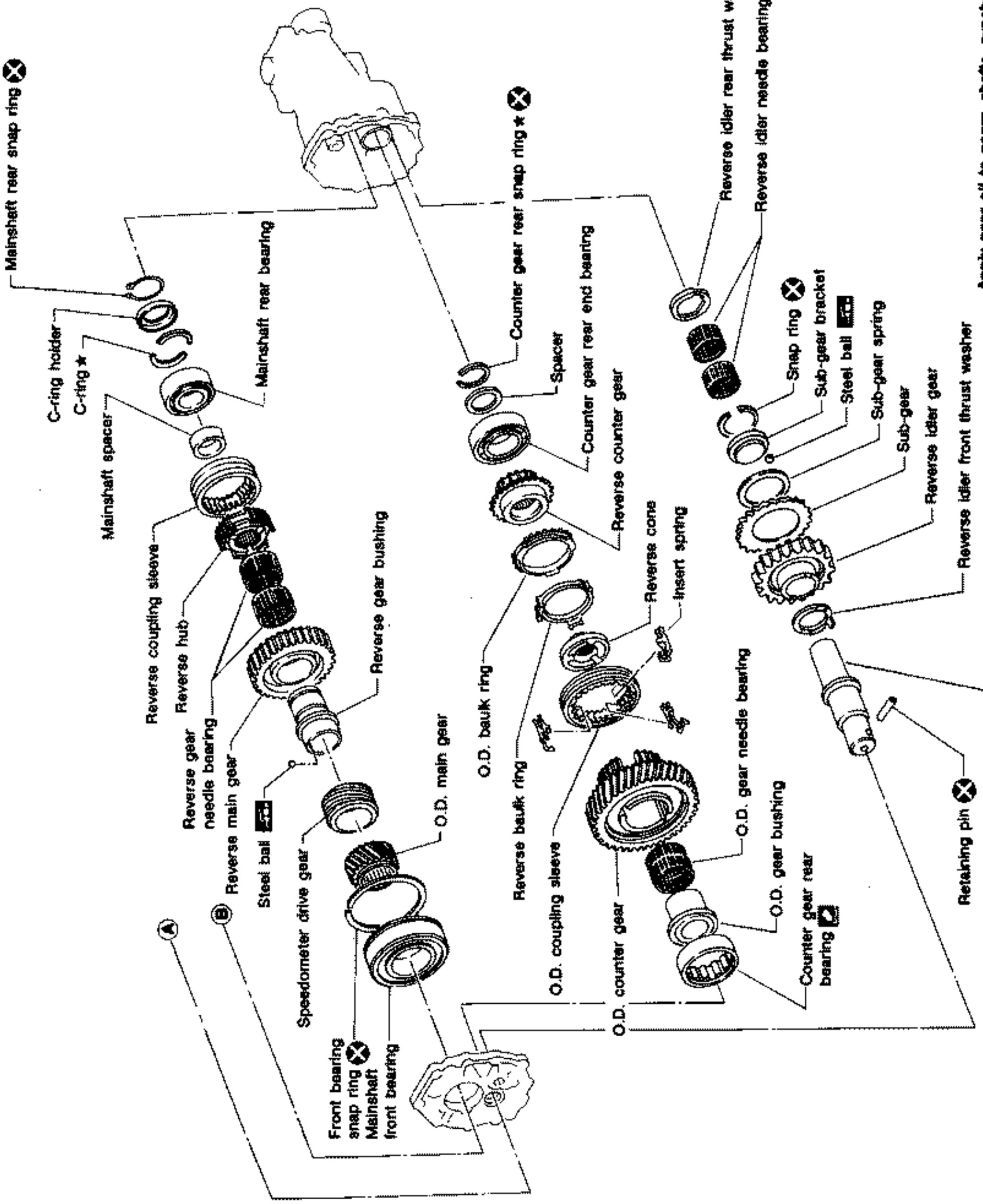

SMT586C

Shift Control Components

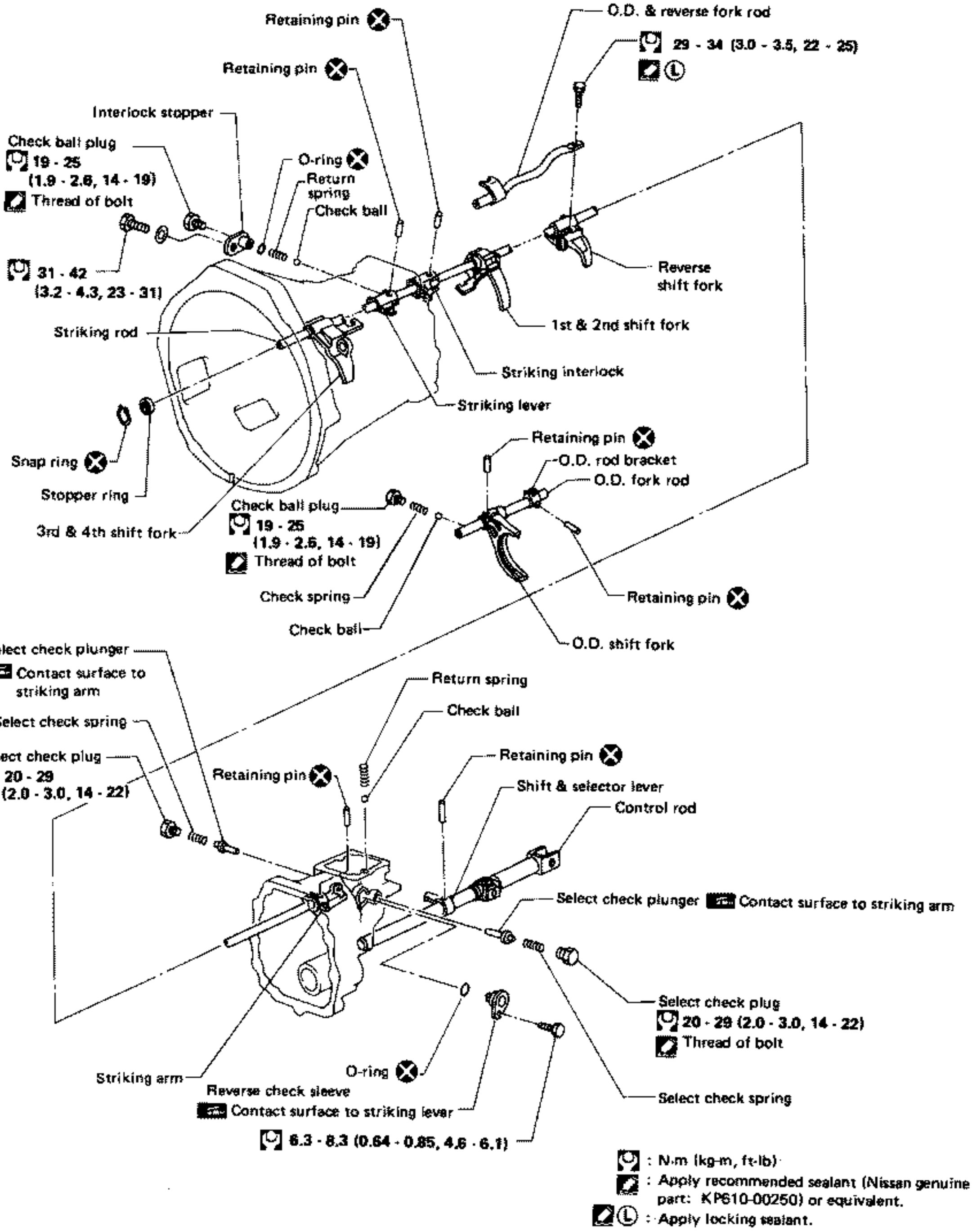

SMT607B

Shift Control Components (Cont'd)

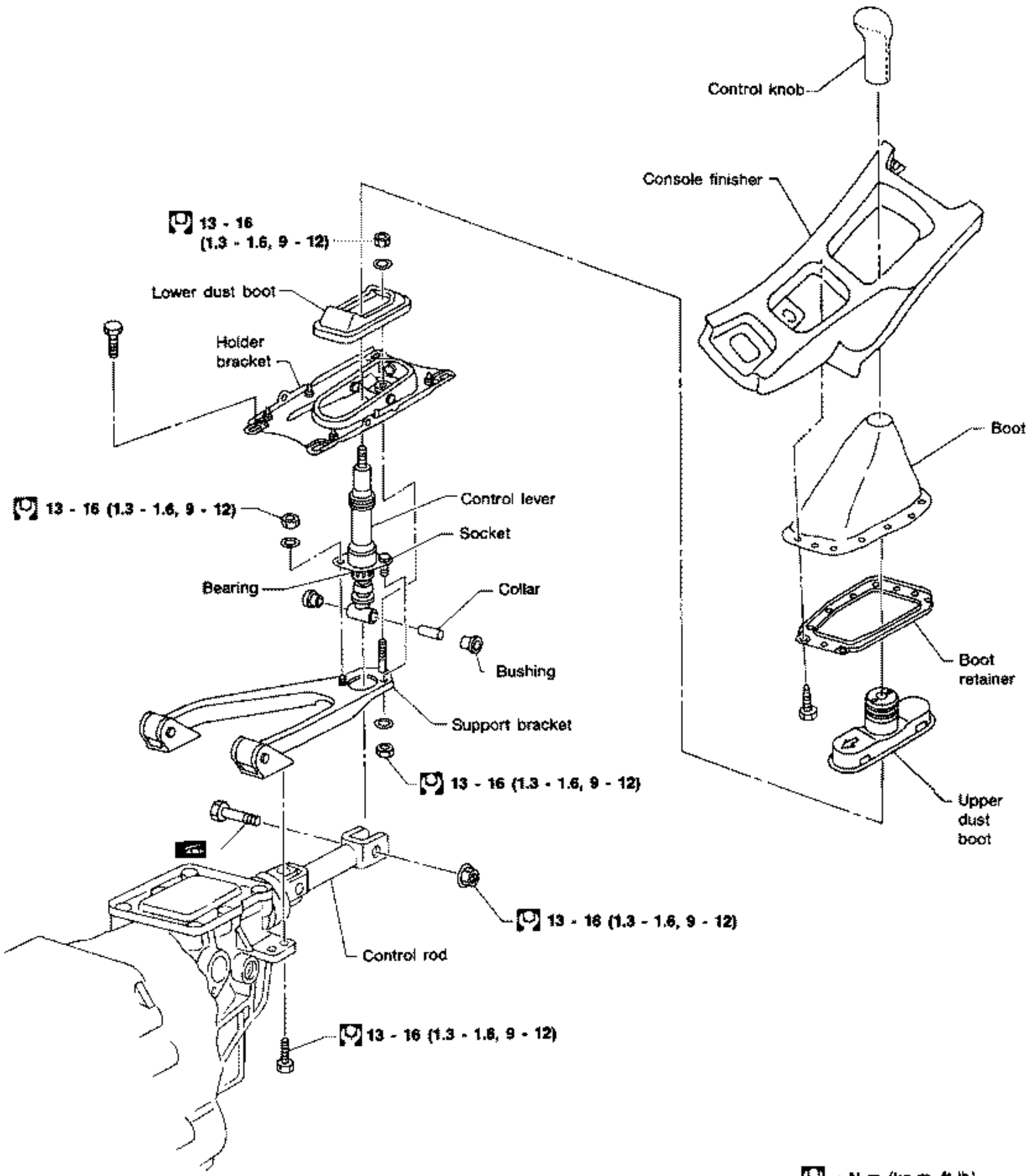

: N·m (kg-m, ft-lb)

SMT651B

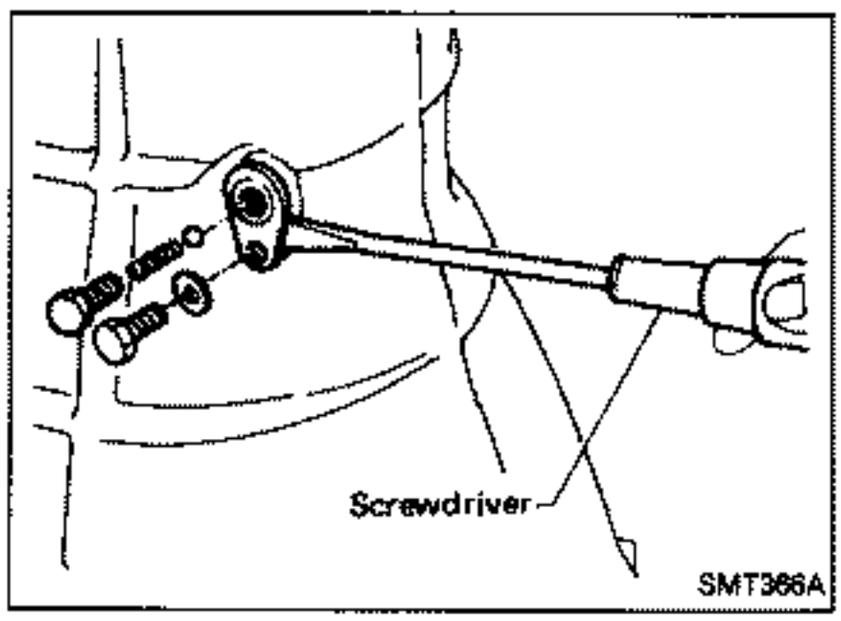

Case Components

1. Remove check ball plug, check spring and check ball. Then remove interlock stopper.

   If interlock assembly is removed as a unit, the check ball can fall into transmission case.

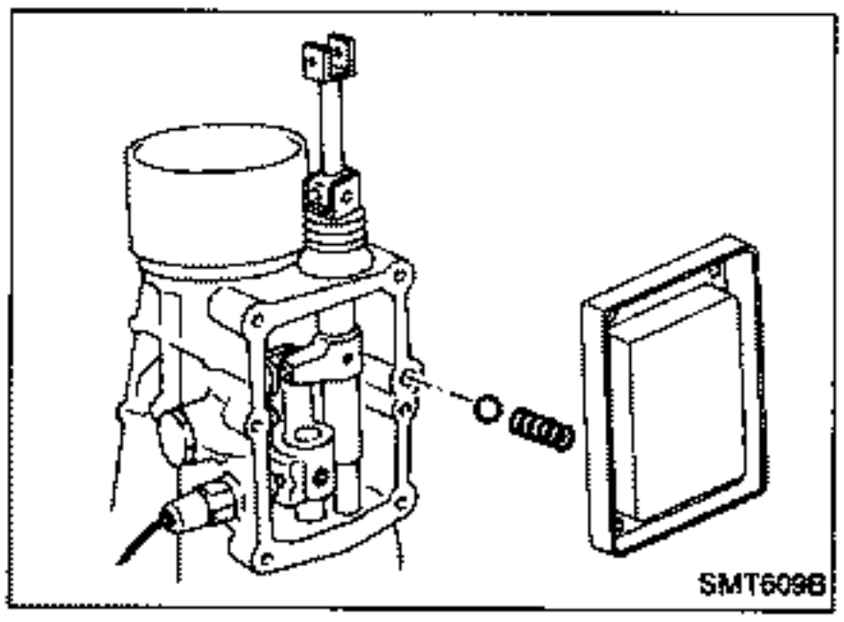

2. Remove upper cover, return spring and check ball.

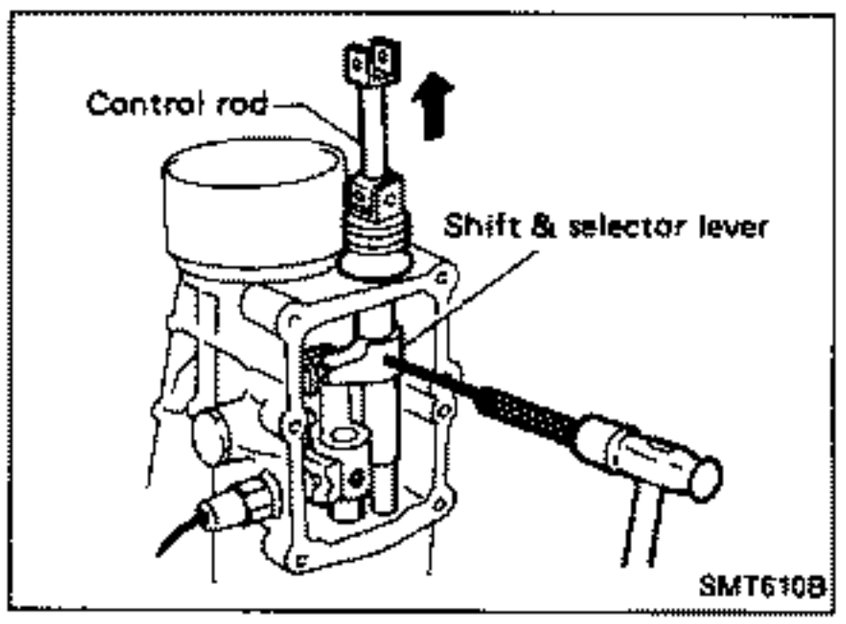

3. Drive out retaining pin from shift & selector lever.
4. Remove control rod from M/T assembly.

Be careful not to damage control rod oil seal and dust cover.

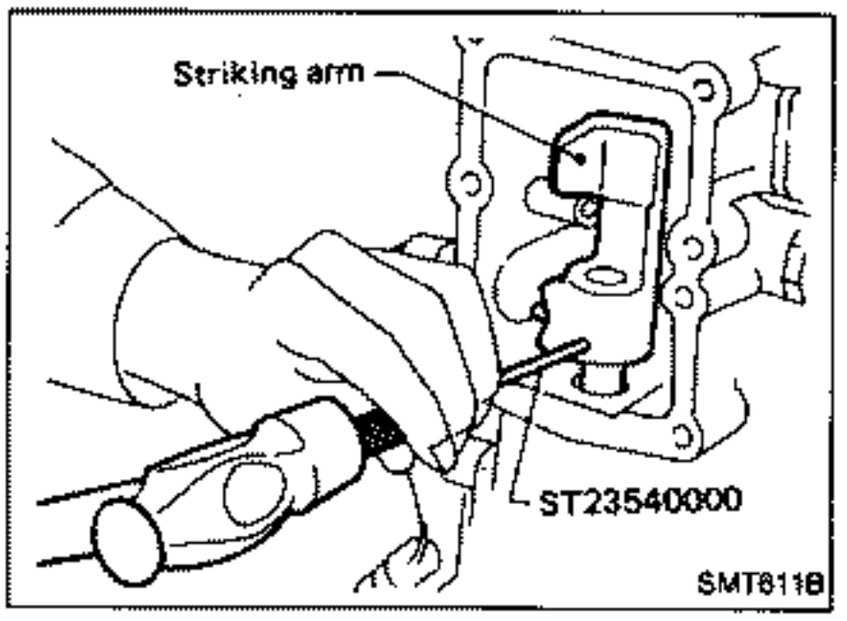

5. Drive out retaining pin from striking arm.

Case Components (Cont'd)

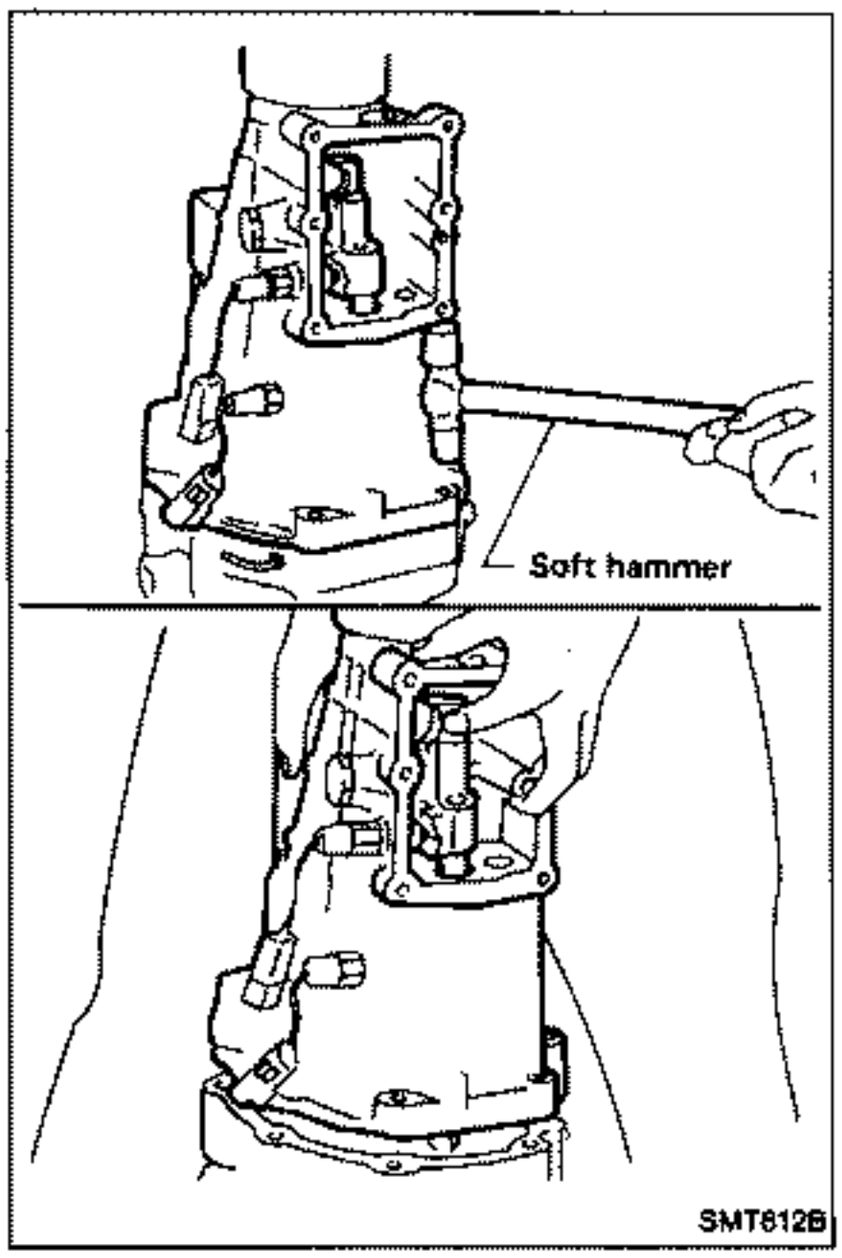

6. Remove rear extension together with striking arm by tapping lightly.

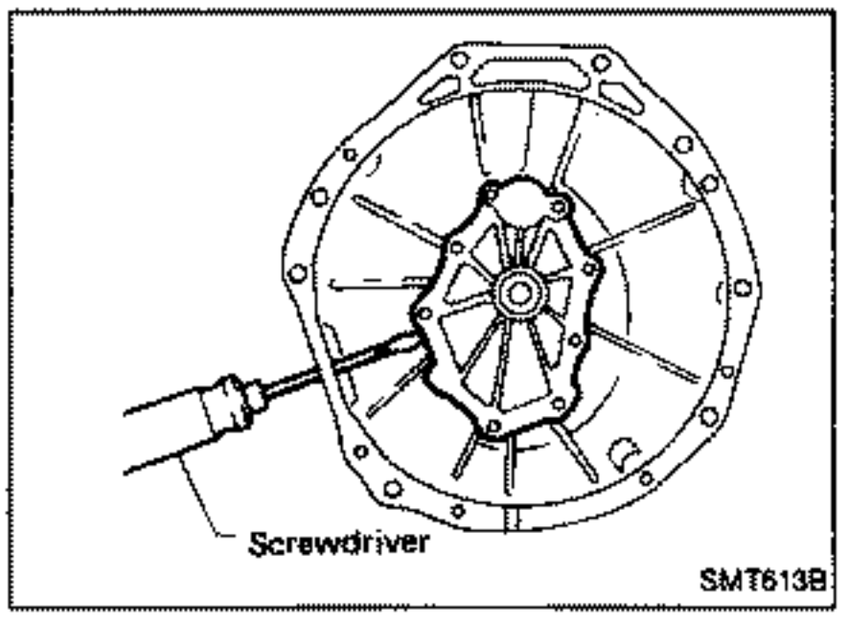

7. Remove front cover and gasket.

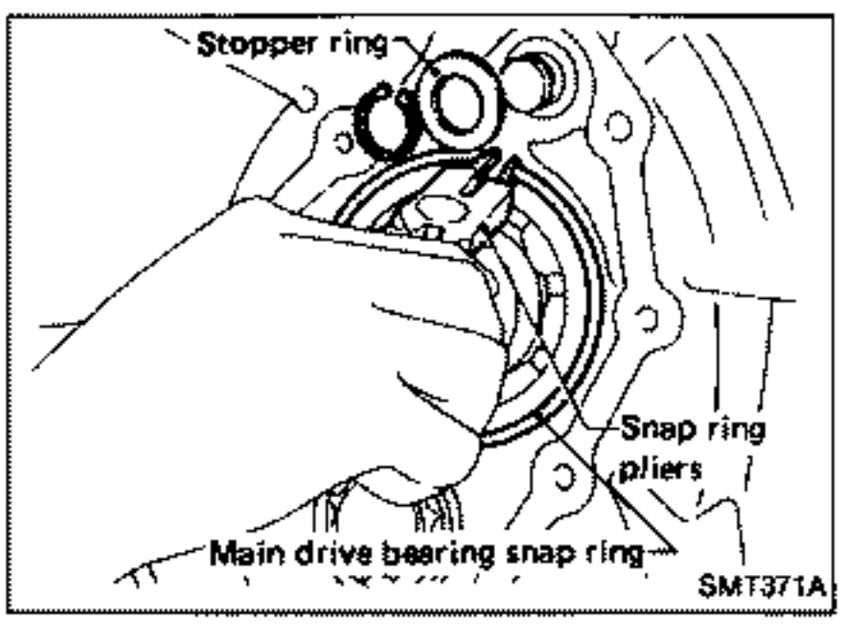

8. Remove stopper ring and main drive bearing snap ring.

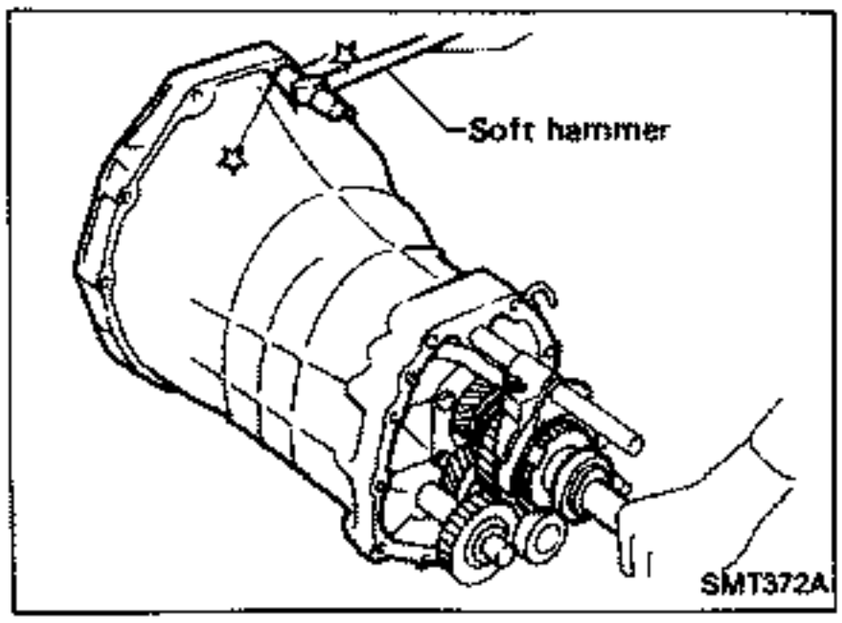

9. Remove transmission case by tapping lightly.

Case Components (Cont'd)

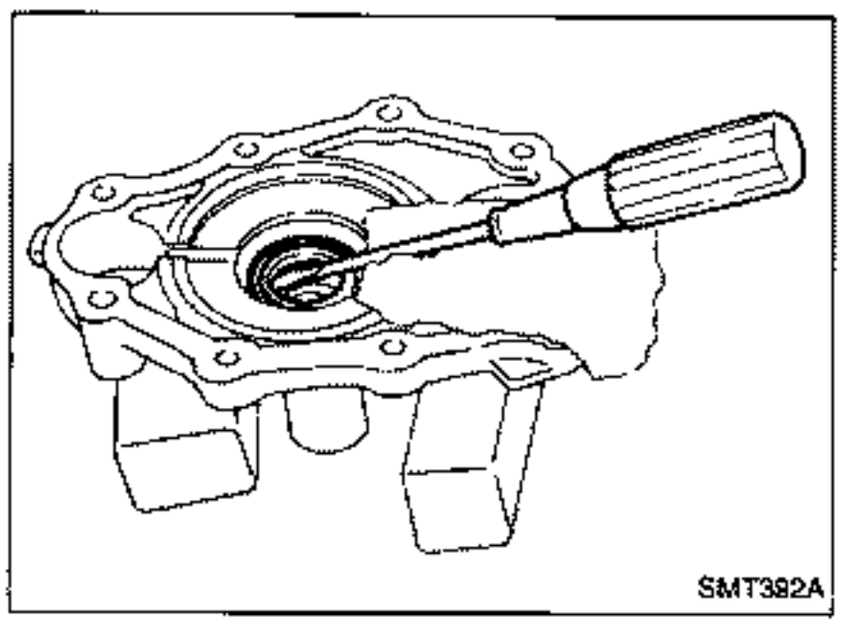

10. Remove front cover oil seal.

Shift Control Components

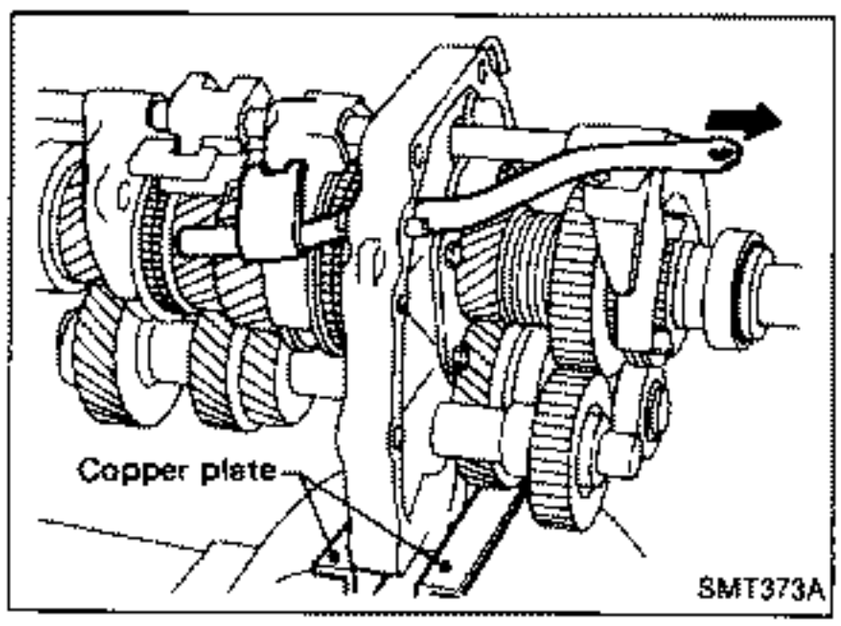

1. Mount adapter plate on vise.
2. Remove O.D. & reverse fork rod.

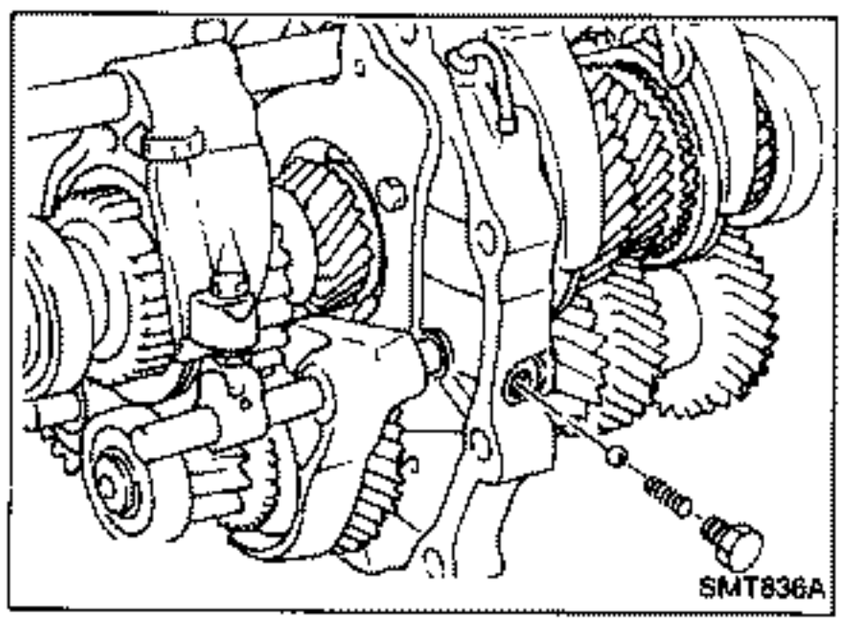

3. Remove check ball plug, check ball and return spring.

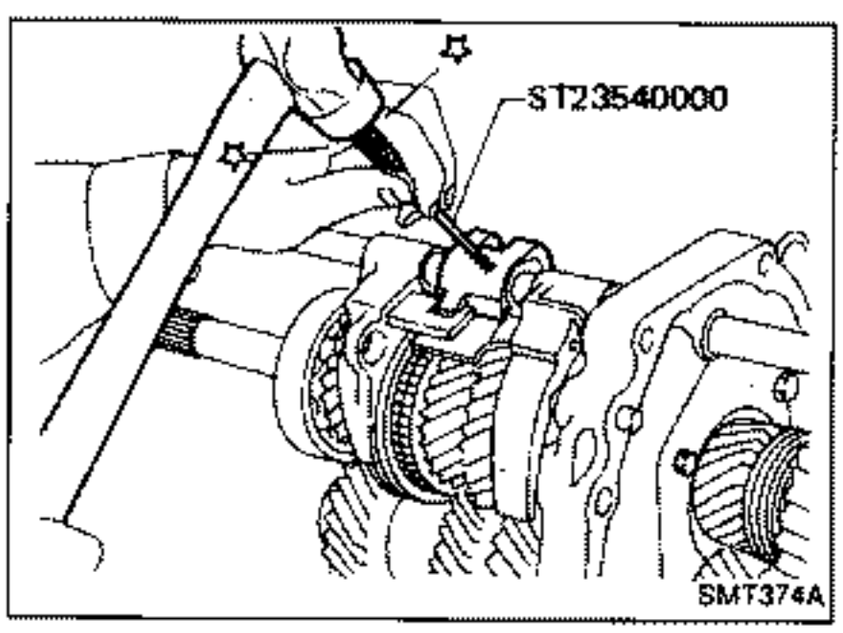

4. Drive out retaining pin from striking lever.
5. While pulling out striking rod, remove striking lever and striking interlock. Then remove 1st & 2nd, 3rd & 4th and reverse shift forks.

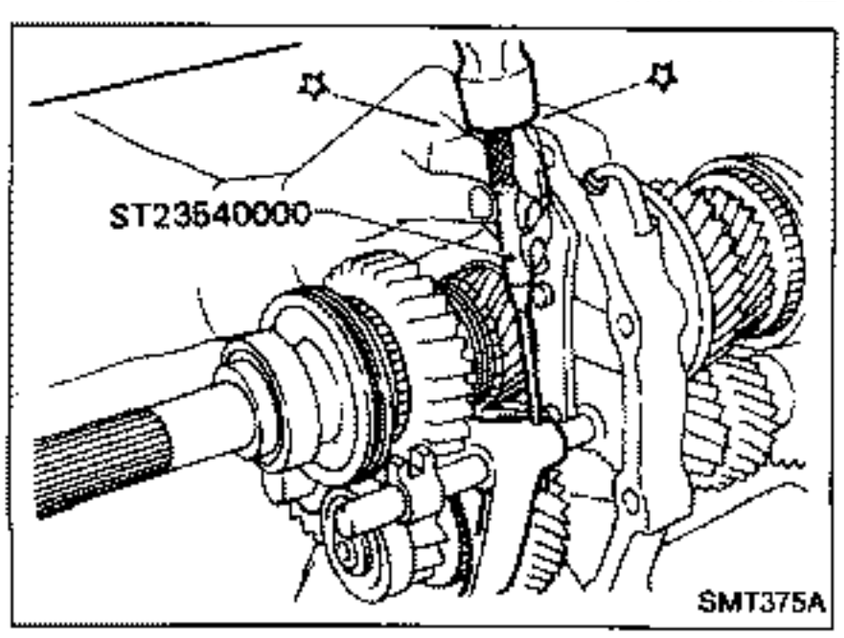

6. Drive out retaining pin from O.D. shift fork.
7. Pull out O.D. fork rod and then remove O.D. shift fork.

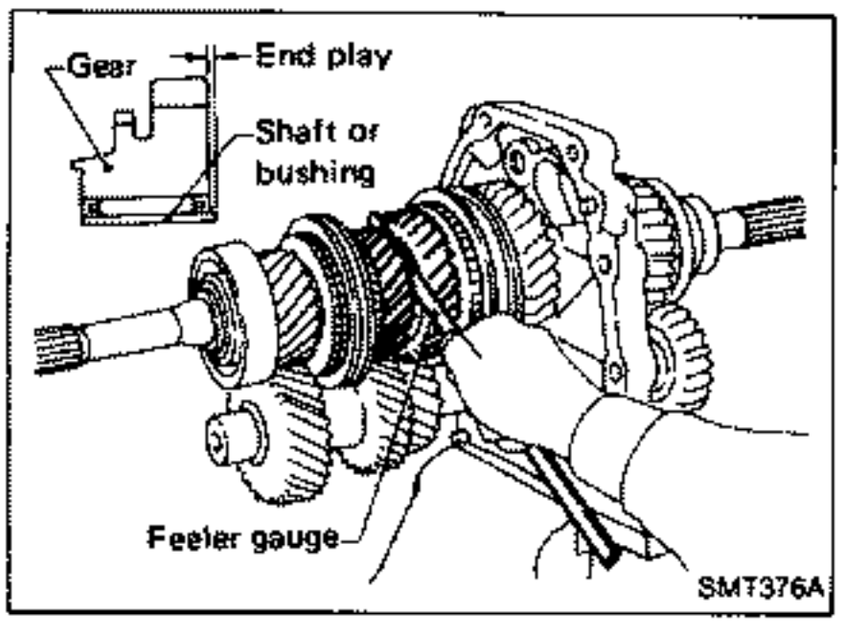

Gear Components

1. Before removing gears and shafts, measure each gear end play.

Gear	End play mm (in)
1st main gear	0.23 - 0.33 (0.0091 - 0.0130)
2nd main gear	0.23 - 0.33 (0.0091 - 0.0130)
3rd main gear	0.23 - 0.33 (0.0091 - 0.0130)
O.D. counter gear	0.23 - 0.33 (0.0091 - 0.0130)
Reverse main gear	0.33 - 0.43 (0.0130 - 0.0169)

- If not within specification, disassemble and check contact surface of gear to hub, washer, bushing, needle bearing and shaft.

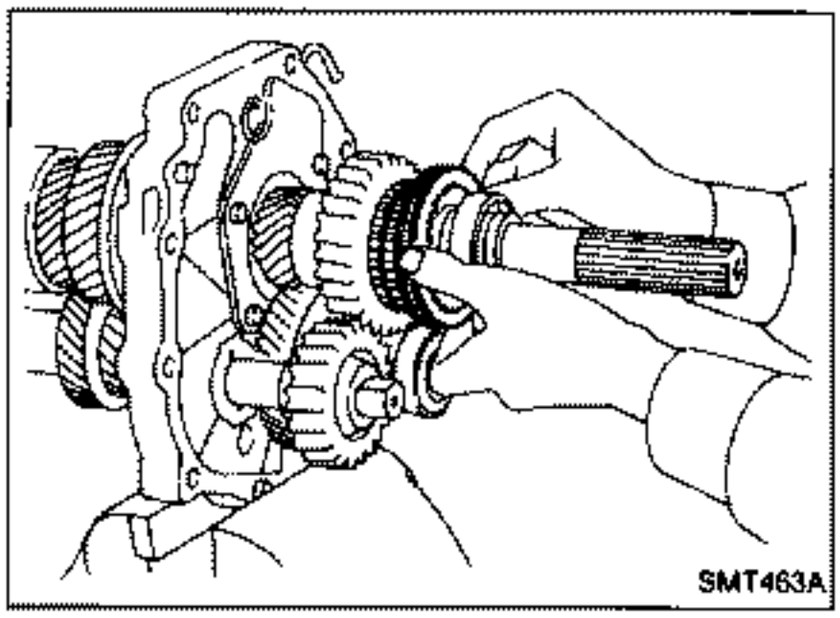

2. Remove rear side components on mainshaft and counter gear.
a. Remove snap ring, speedometer drive gear and steel ball.
b. Remove reverse coupling sleeve.

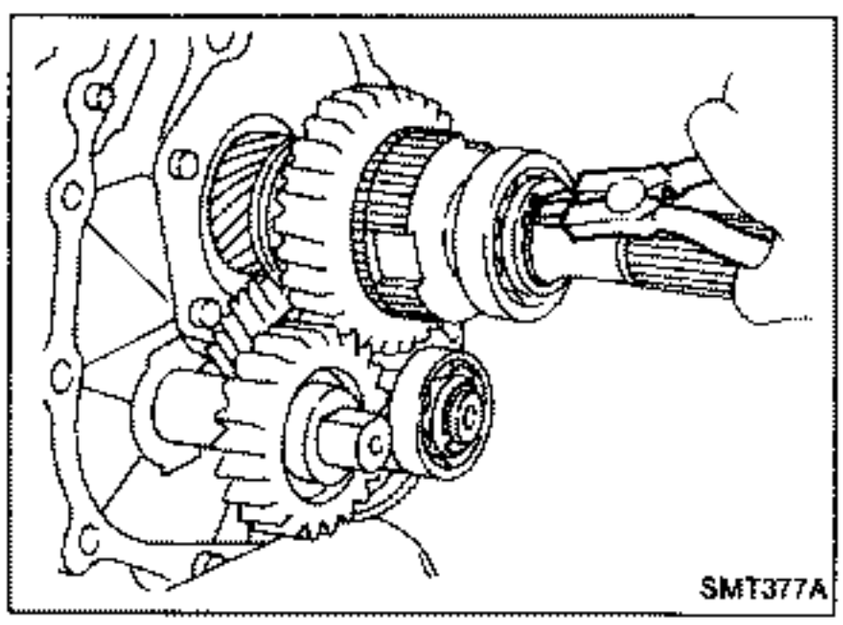

c. Remove mainshaft rear snap ring and counter gear rear snap ring.
d. Remove C-ring holder and mainshaft C-rings from mainshaft. Use punch and hammer to remove C-rings.

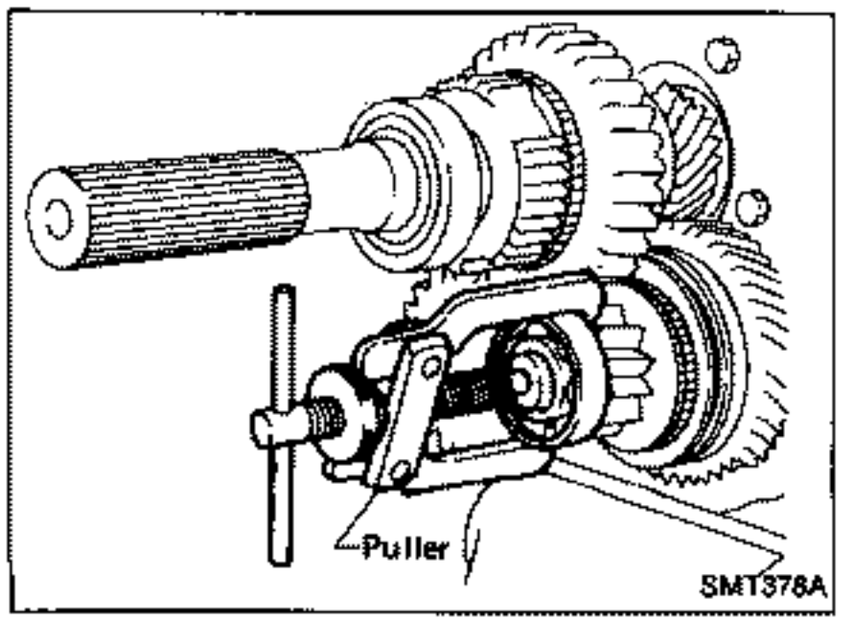

e. Pull out counter gear rear end bearing.
f. Remove reverse idler gear and reverse idler thrust washers.

Gear Components (Cont'd)

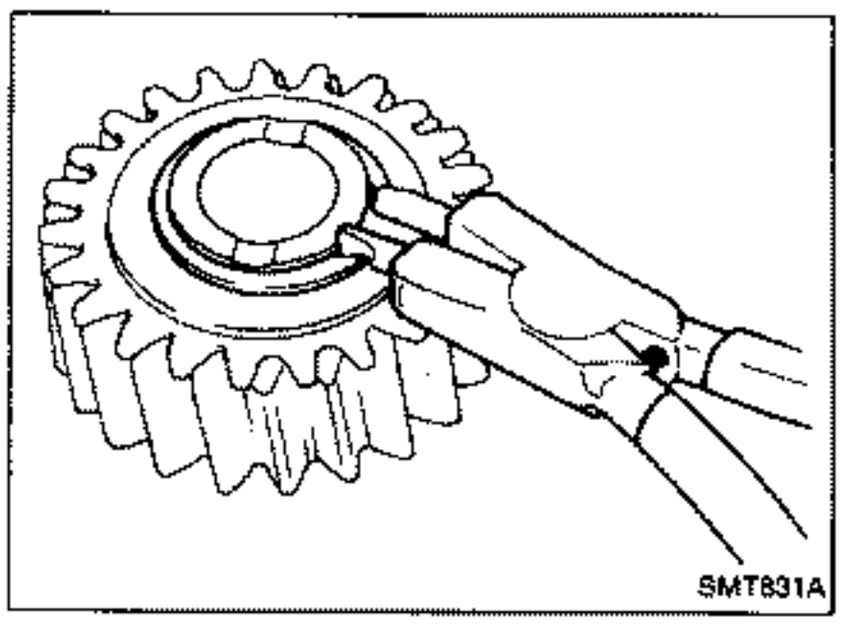

g. Remove sub-gear from reverse idler gear.

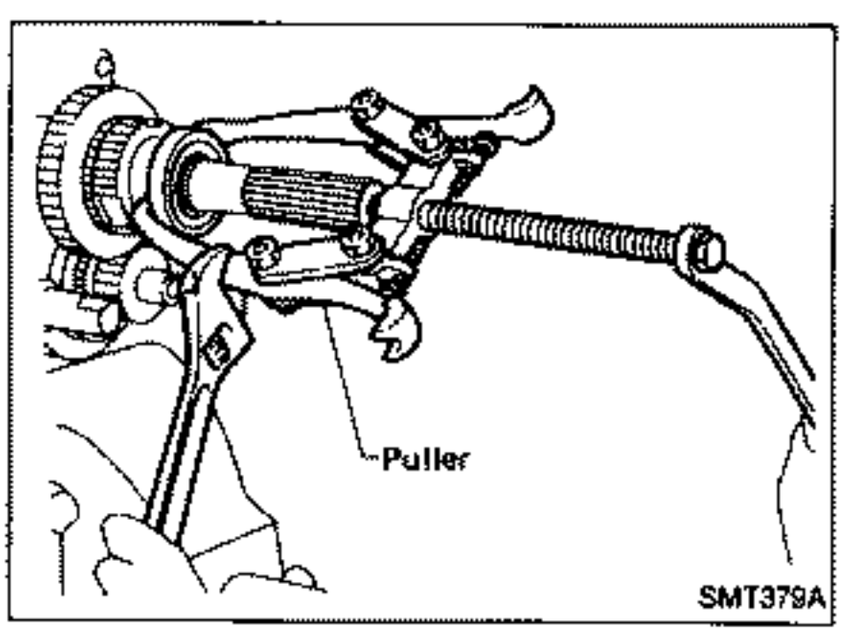

h. Pull out mainshaft rear bearing.

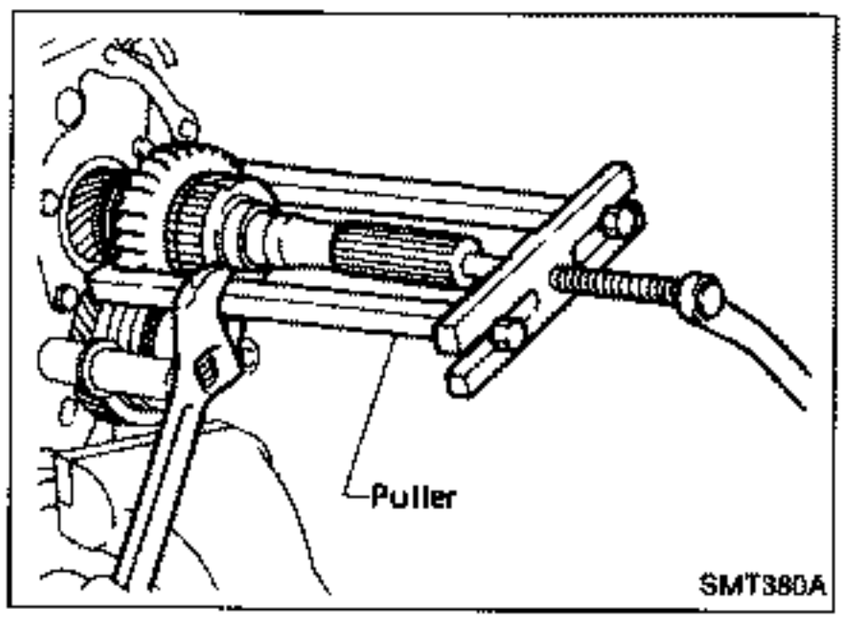

i. Pull out reverse main gear together with mainshaft spacer and reverse synchronizer hub. Then remove reverse gear needle bearings.

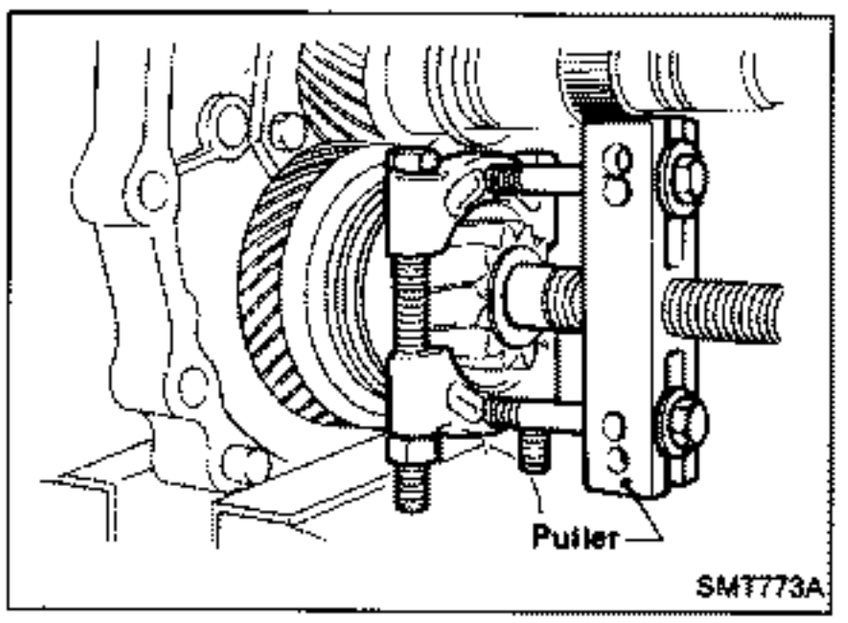

j. Pull out reverse counter gear.
k. Remove O.D. coupling sleeve together with O.D. baulk ring, reverse baulk ring and spring inserts.

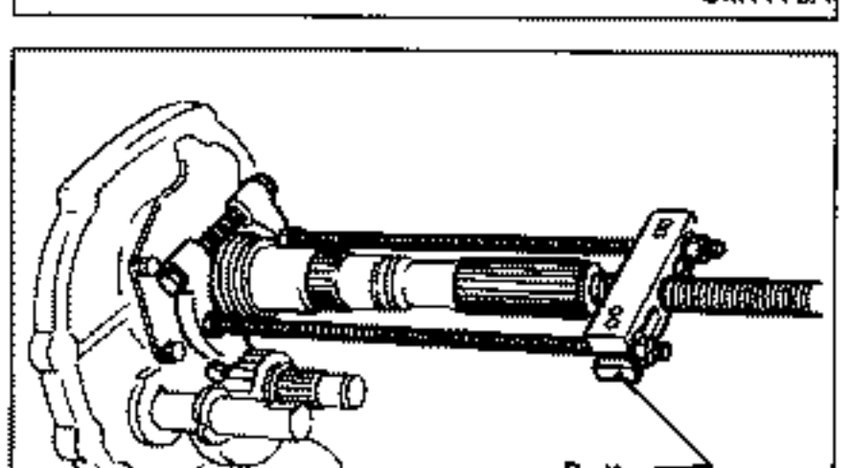

l. Pull out reverse gear bushing.

Gear Components (Cont'd)

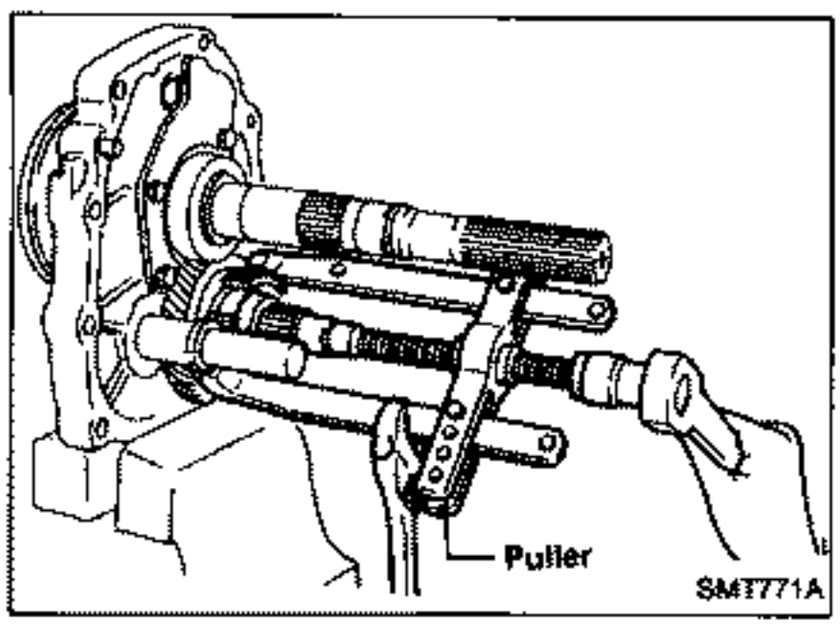

m. Pull out O.D. counter gear together with reverse cone.

3. Press out mainshaft and counter gear alternately.

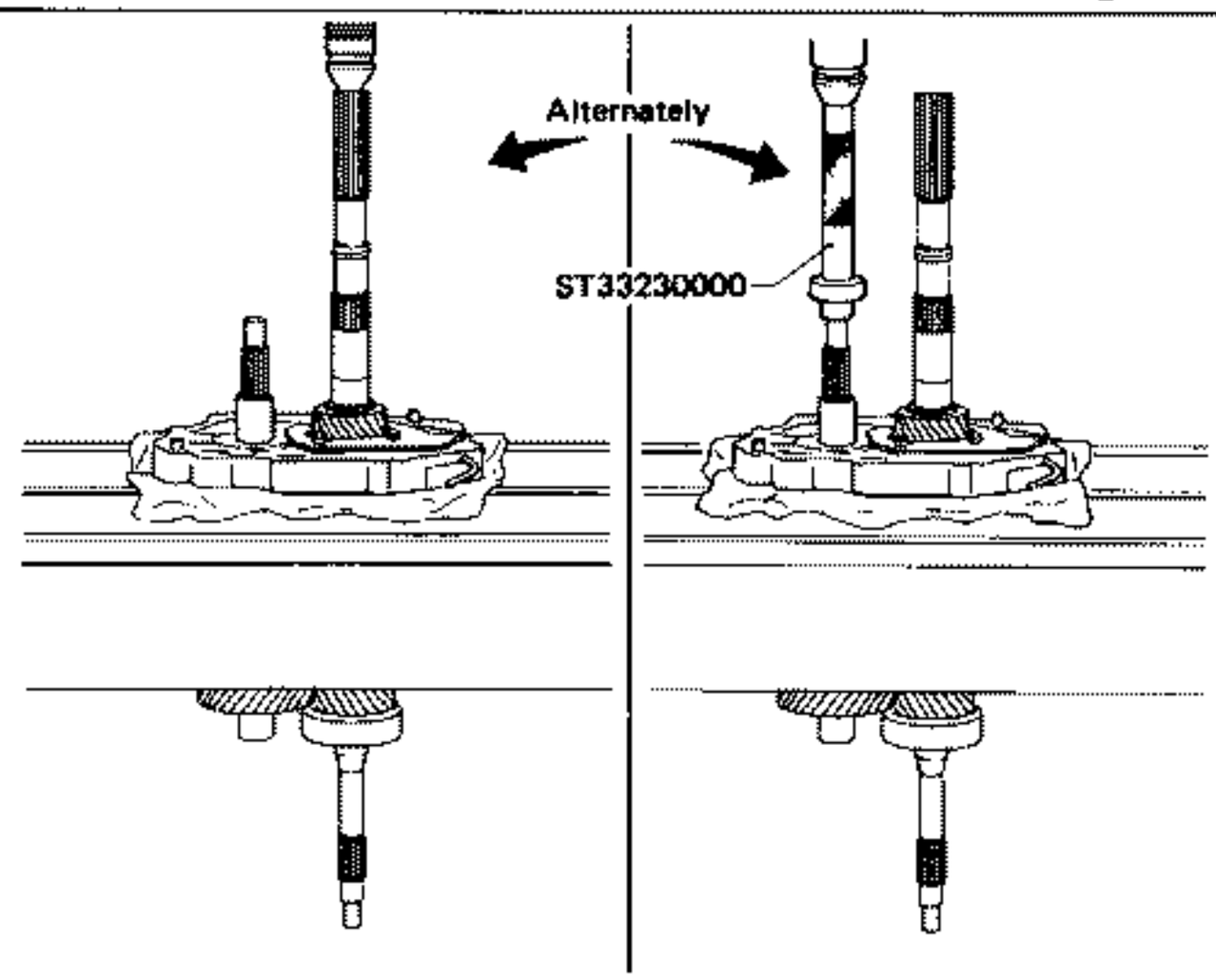

Be sure to press mainshaft and counter gear alternately so as not to allow the front surface of one to contact the rear surface of the other.

SMT772A

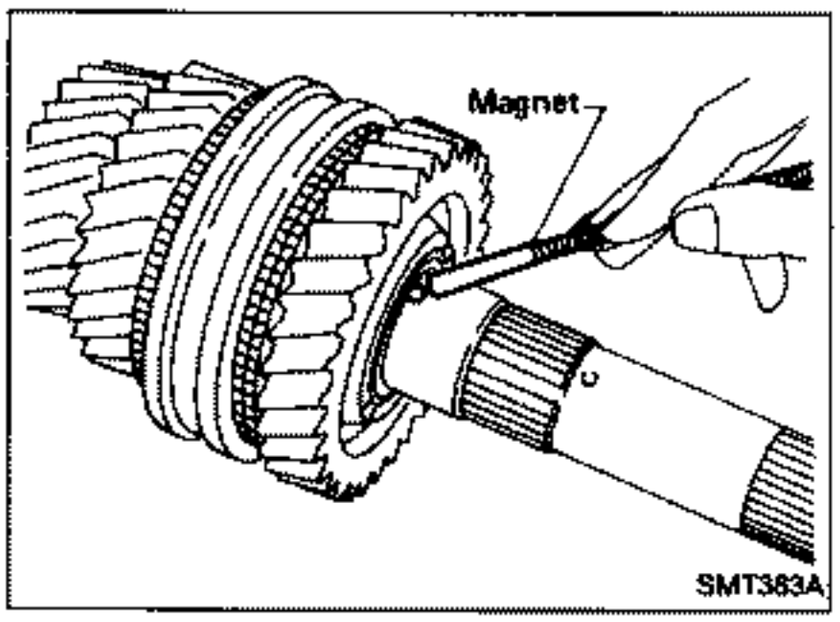

4. Remove front side components on mainshaft.
a. Remove 1st gear washer and steel ball.
b. Remove 1st main gear and 1st gear needle bearing.

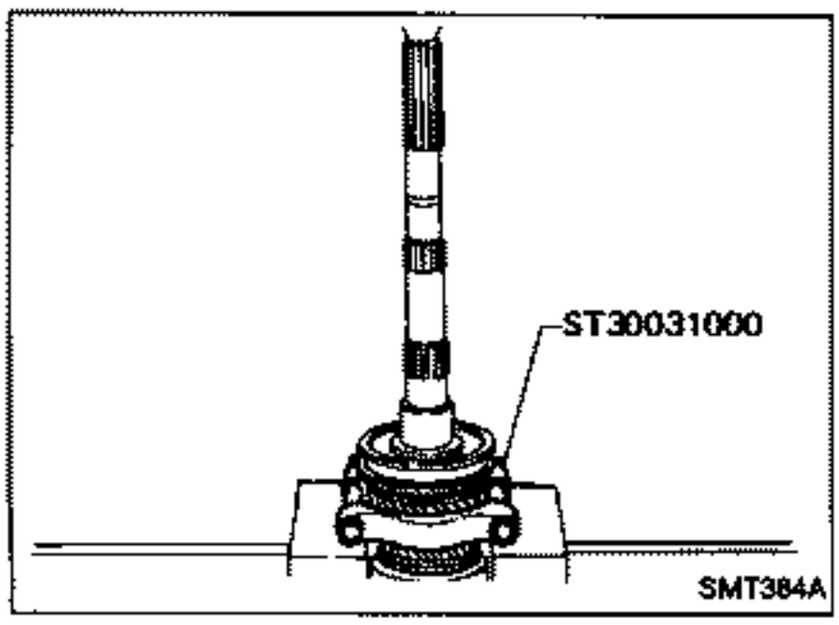

c. Press out 2nd main gear together with 1st gear bushing and 1st & 2nd synchronizer assembly.
d. Remove mainshaft front snap ring.

Gear Components (Cont'd)

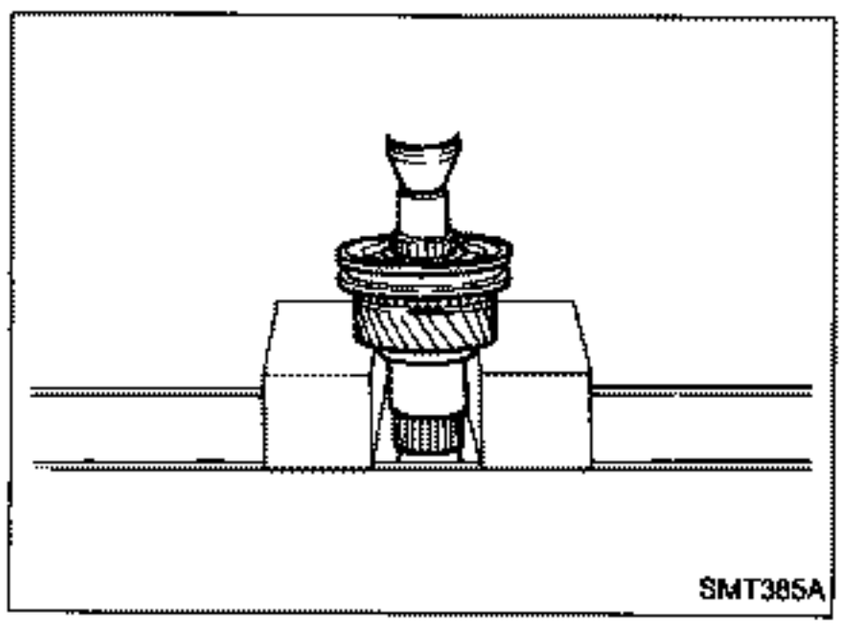

e. Press out 3rd main gear together with 3rd & 4th synchronizer assembly and 3rd gear needle bearing.

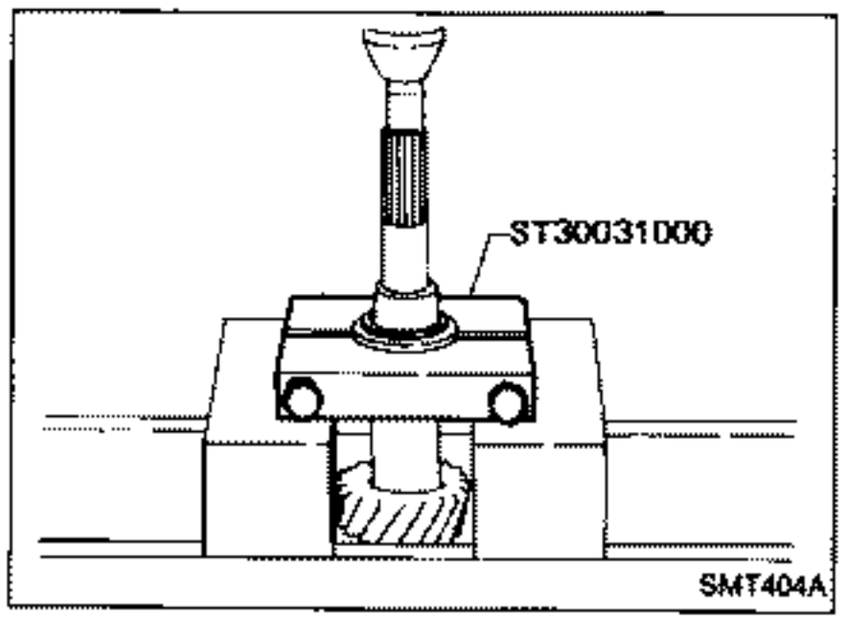

5. Remove front side components on counter gear.
a. Remove counter gear rear thrust bearing.

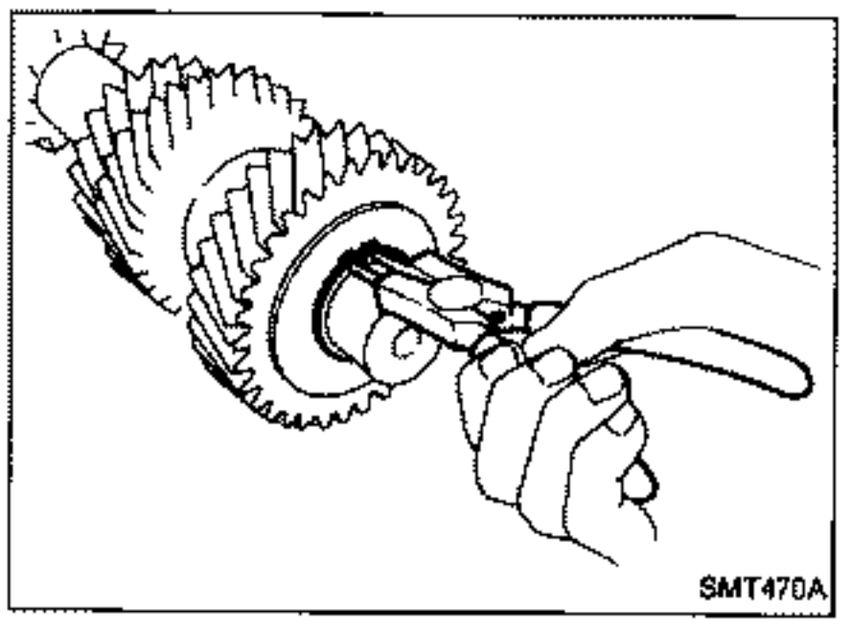

b. Remove sub-gear components.

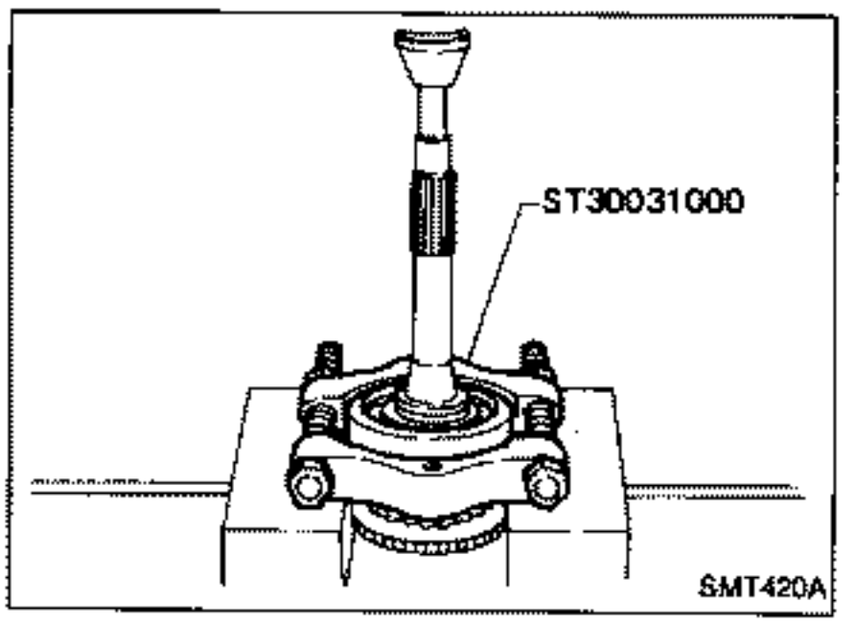

6. Remove main drive gear bearing.
a. Remove main drive gear snap ring and spacer.
b. Press out main drive gear bearing.

Gear Components (Cont'd)

7. Remove bearings from case components.

Counter gear front bearing in transmission case

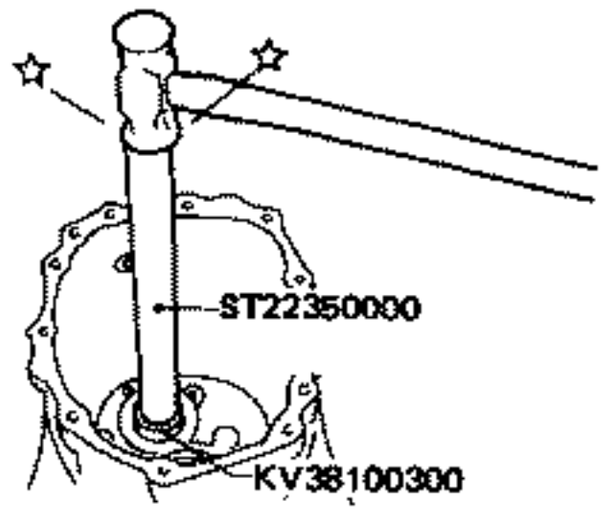

SMT388A

Mainshaft front bearing in adapter plate

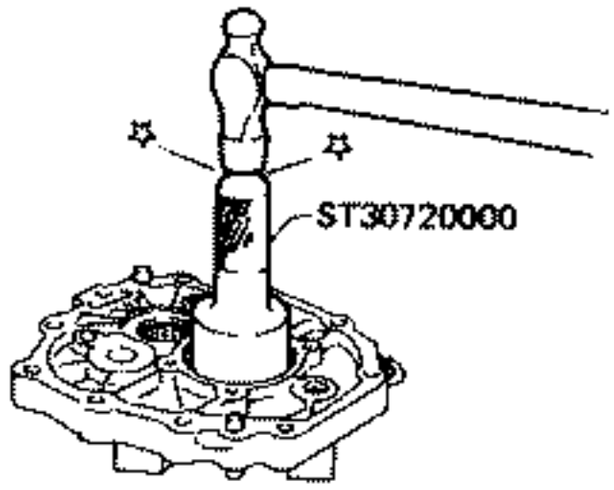

SMT396A

Counter gear rear bearing in adapter plate

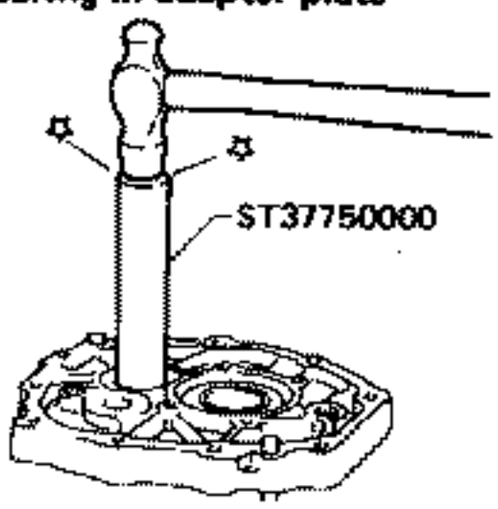

SMT394A

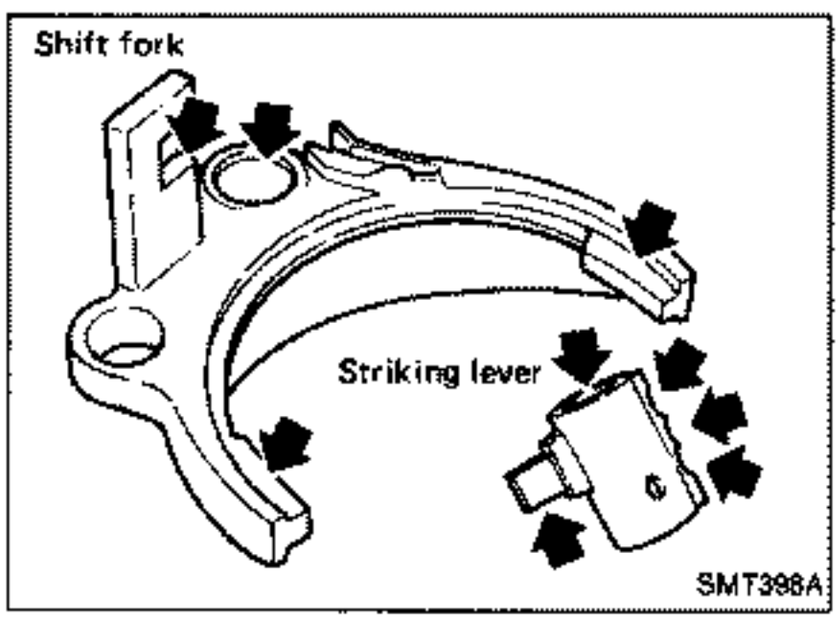

Shift Control Components

- Check contact surface and sliding surface for wear, scratches, projections or other damage.

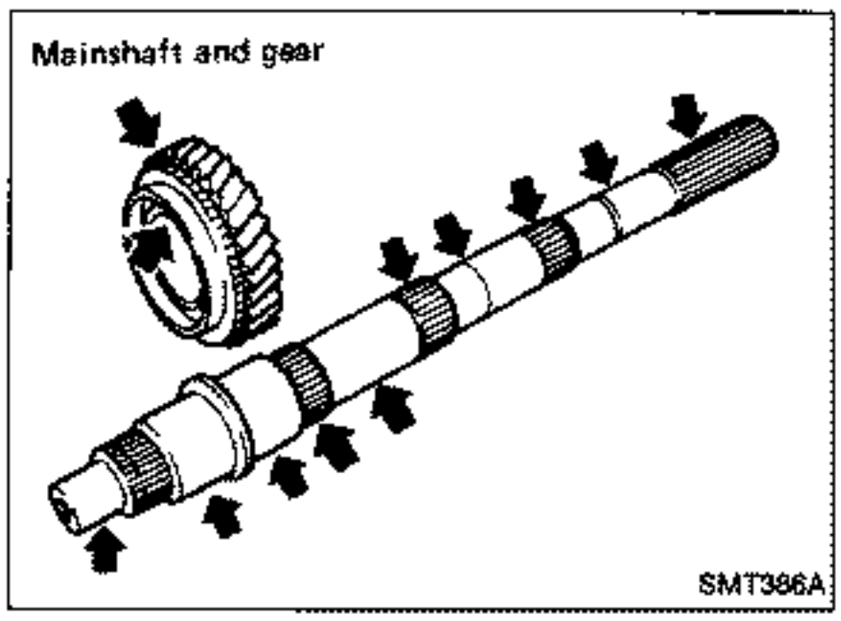

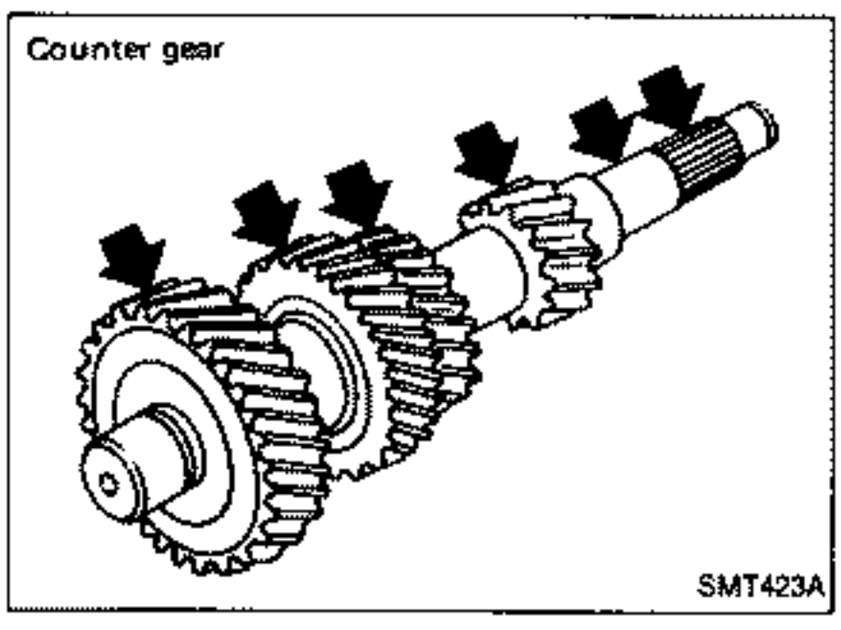

Gear Components

GEARS AND SHAFTS

- Check shafts for cracks, wear or bending.
- Check gears for excessive wear, chips or cracks.

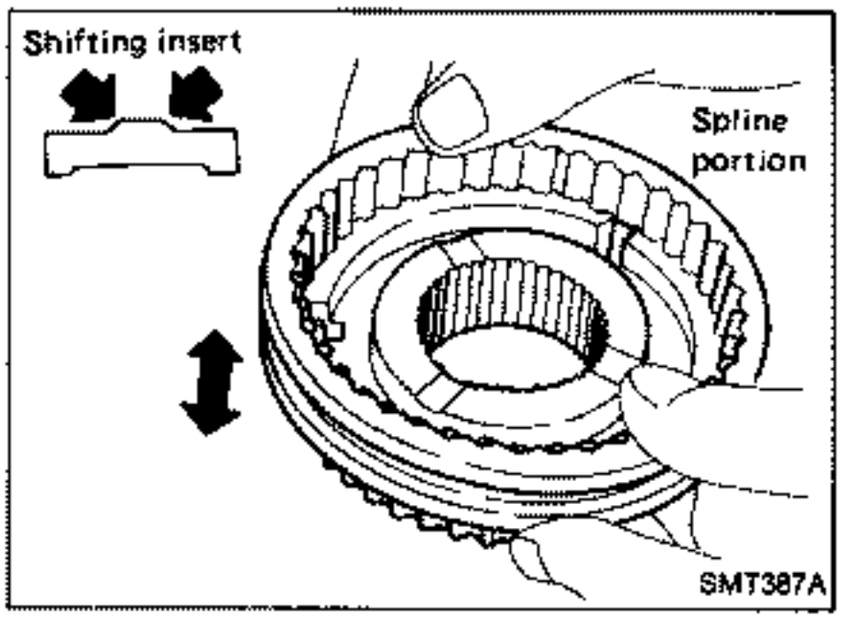

SYNCHRONIZERS

- Check spline portion of coupling sleeves, hubs, and gears for wear or cracks.
- Check baulk rings for cracks or deformation.
- Check shifting inserts for wear or deformation.
- Check insert springs for deformation.

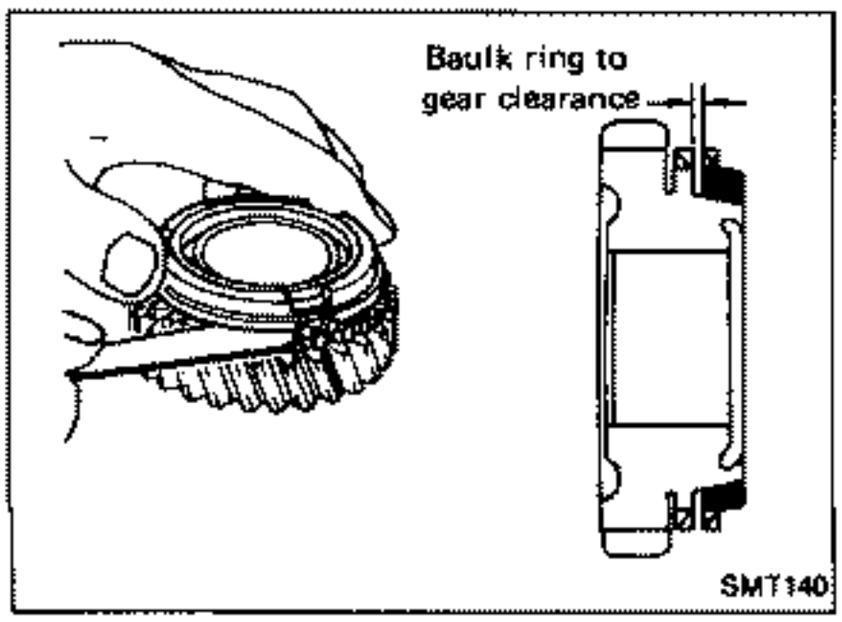

Clearance between baulk ring and gear

- Measure wear of main drive, 1st and O.D. baulk rings.

Unit: mm (in)

	Standard	Wear limit
1st	1.05 - 1.3 (0.0413 - 0.0512)	0.7 (0.028)
Main drive	1.05 - 1.3 (0.0413 - 0.0512)	0.7 (0.028)
O.D.	1.05 - 1.3 (0.0413 - 0.0512)	0.7 (0.028)

If the clearance is smaller than the wear limit, replace baulk ring.

Gear Components (Cont'd)

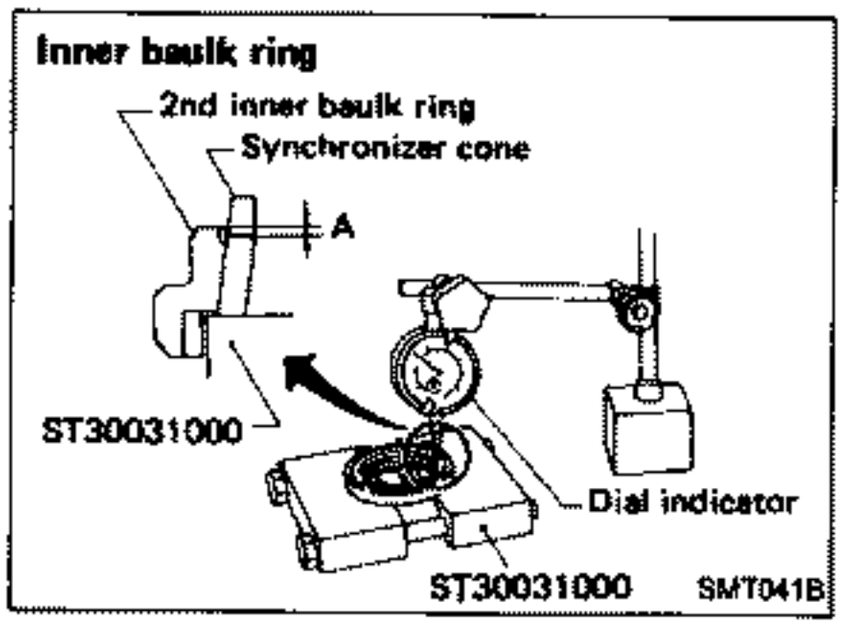

- Measure wear of 2nd and 3rd baulk rings.

a. Place baulk rings in position on synchronizer cone.
b. While holding baulk rings against synchronizer cone as far as it will go, measure dimensions "A" and "B".

Unit: mm (in)

Dimension	Standard	Wear limit
A	0.6 - 1.1 (0.024 - 0.043)	0.2 (0.008)
B	0.7 - 0.9 (0.028 - 0.035)	

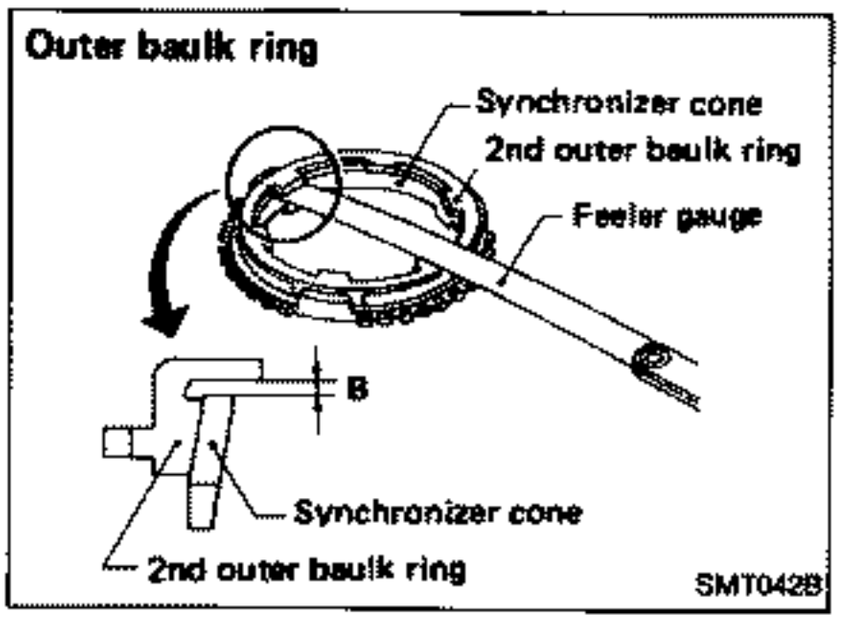

c. If dimension "A" or "B" is smaller than the wear limit, replace baulk ring.

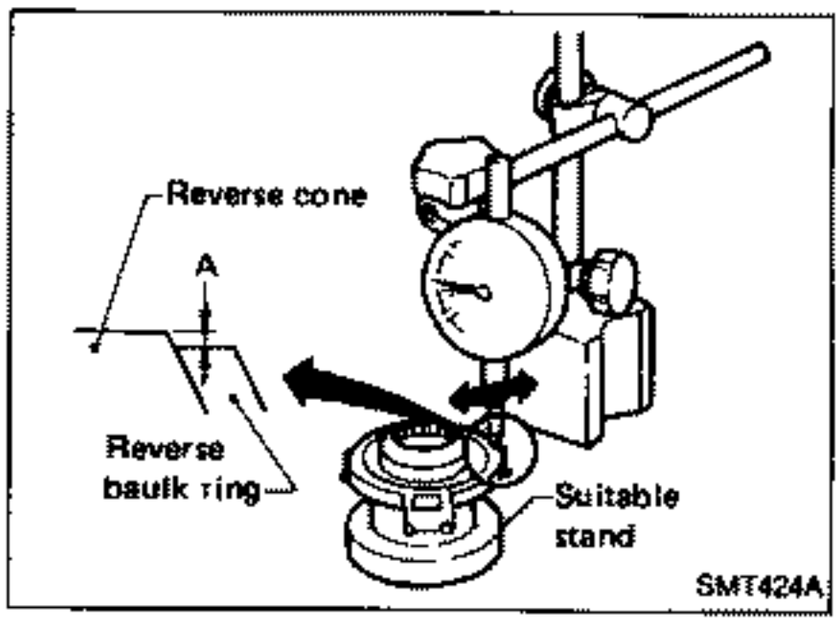

- Measure wear of reverse baulk ring.

a. Place baulk ring in position on reverse cone.
b. While holding baulk ring against reverse cone as far as it will go, measure dimension "A" with dial indicator.

Unit: mm (in)

	Standard	Wear limit
Dimension "A"	-0.1 to 0.35 (-0.0039 to 0.0138)	0.7 (0.028)

c. If dimension "A" is larger than the wear limit, replace baulk ring.

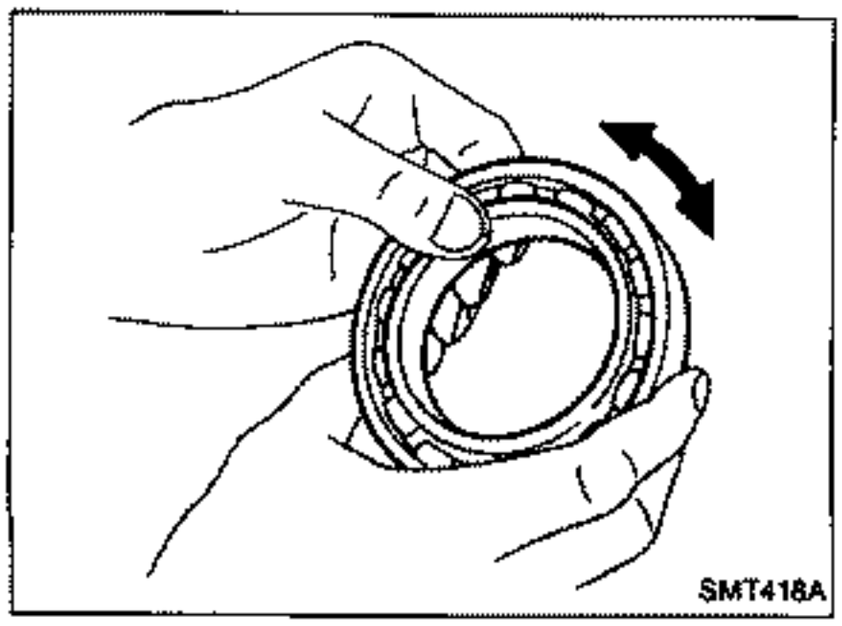

BEARINGS

- Make sure bearings roll freely and are free from noise, crack, pitting or wear.

Gear Components

1. Install bearings into case components.

Counter gear front bearing in transmission case

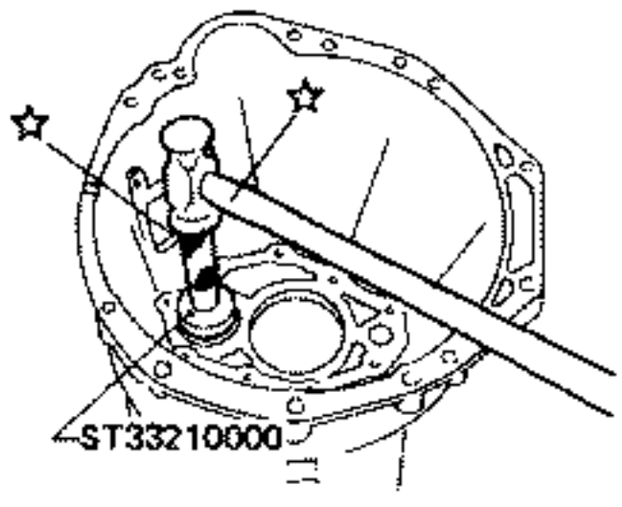

SMT389A

Mainshaft front bearing in adapter plate

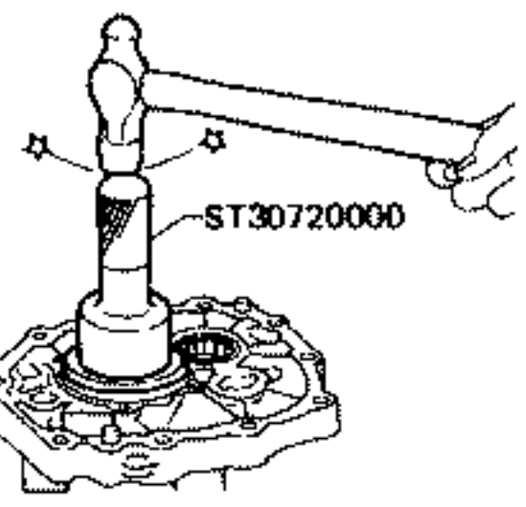

SMT397A

Counter gear rear bearing in adapter plate

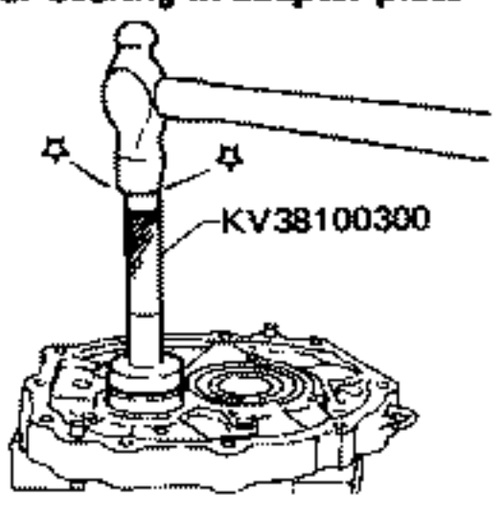

SMT395A

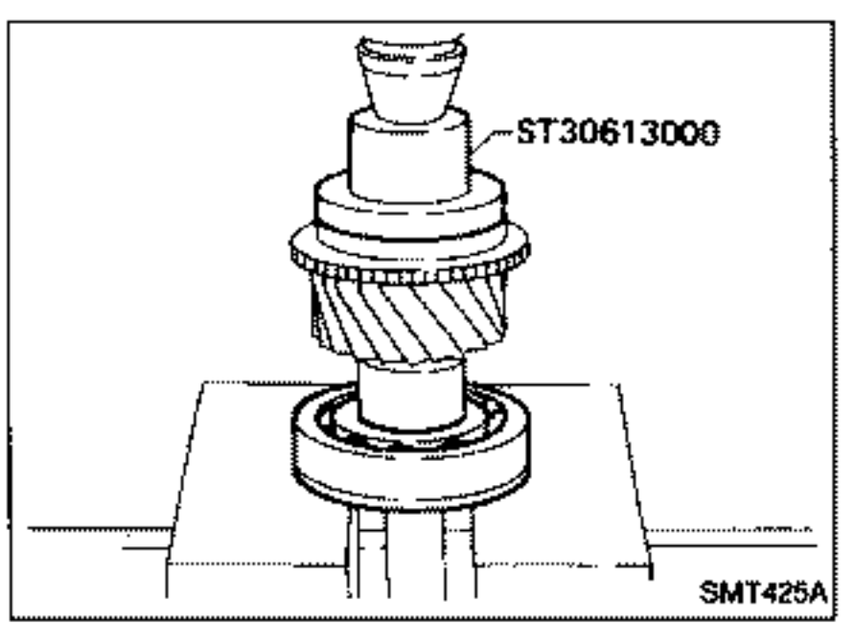

SMT425A

2. Install main drive gear bearing.
a. Press main drive gear bearing.
b. Install main drive gear spacer.

Gear Components (Cont'd)

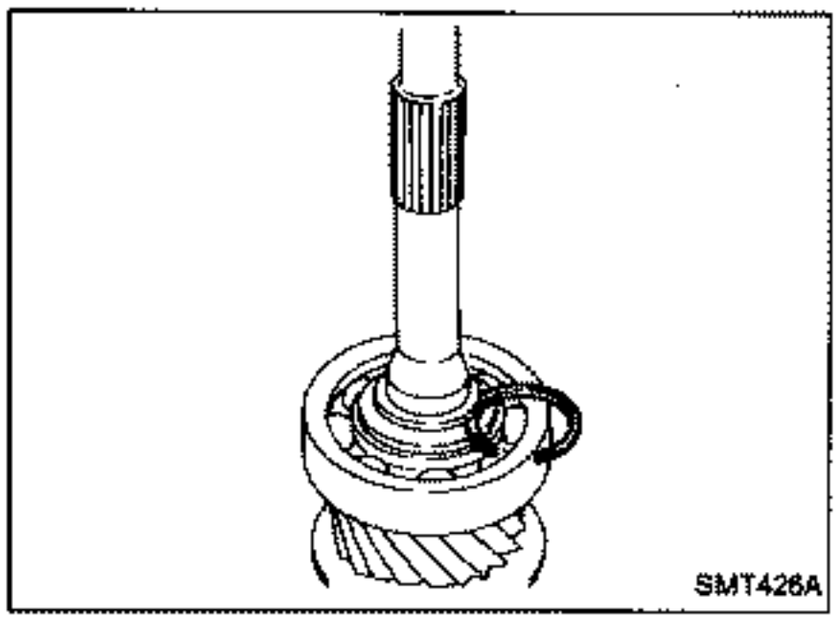

c. Select proper main drive gear snap ring to minimize clearance of groove.

Allowable clearance of groove:
0 - 0.1 mm (0 - 0.004 in)

Main drive gear snap ring

Thickness mm (in)	Part number
1.89 (0.0744)	32204-01G00
1.98 (0.0780)	32204-01G01
2.05 (0.0807)	32204-01G02
2.12 (0.0835)	32204-01G03
2.19 (0.0862)	32204-01G04

d. Install selected snap ring on main drive gear.

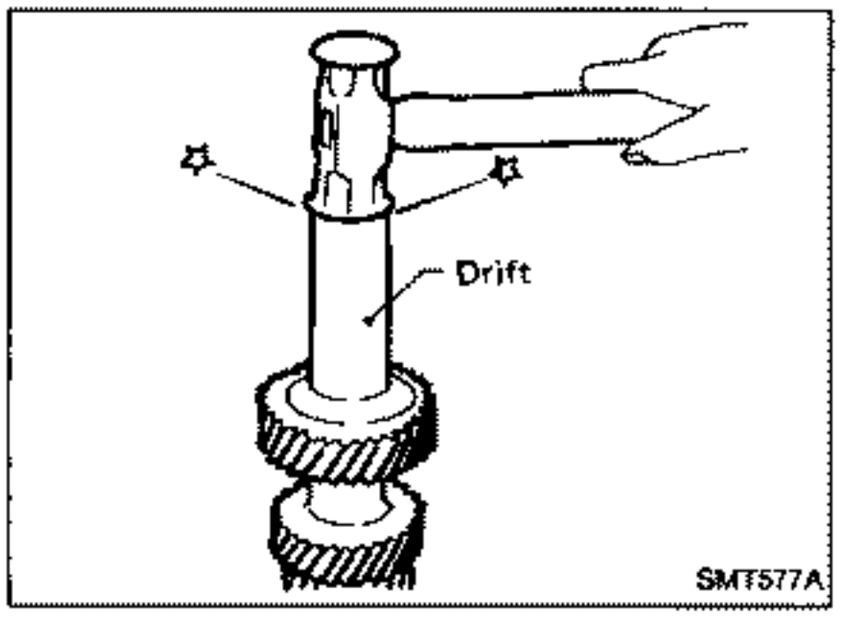

3. Install components on counter gear.
a. Install sub-gear components.

When installing sub-gear snap ring, tap sub-gear snap ring into position on counter gear.

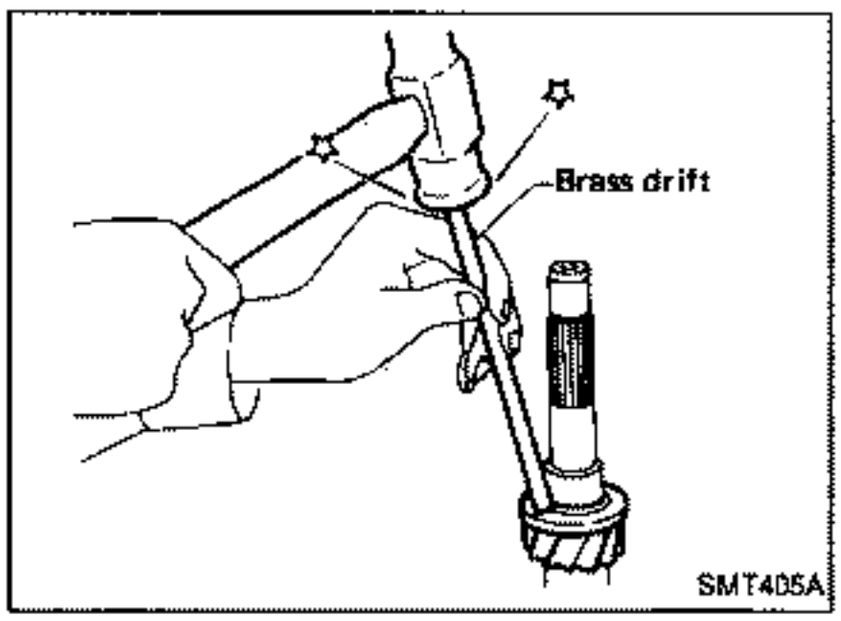

b. Install counter gear rear thrust bearing.

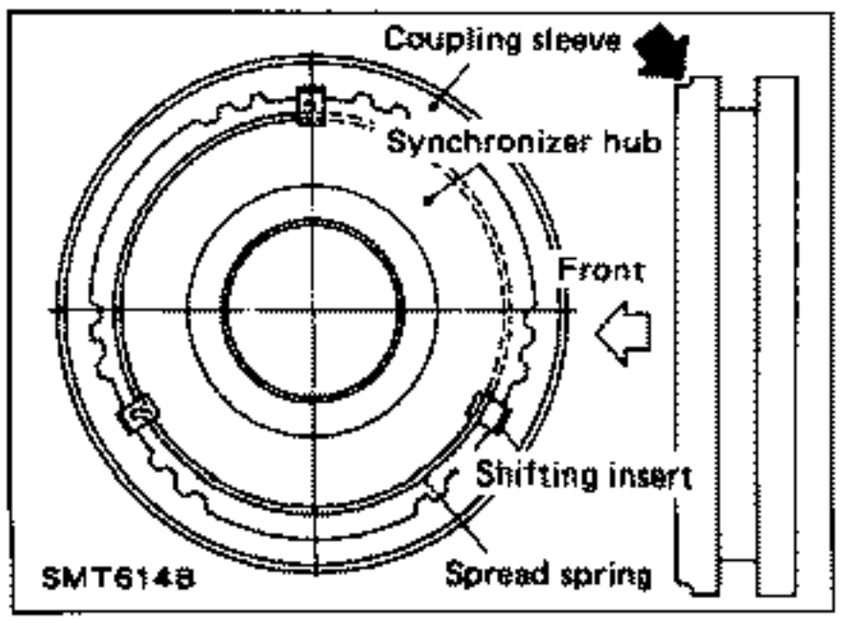

4. Install front side components on mainshaft.
a. Assemble 1st & 2nd synchronizer.

Gear Components (Cont'd)

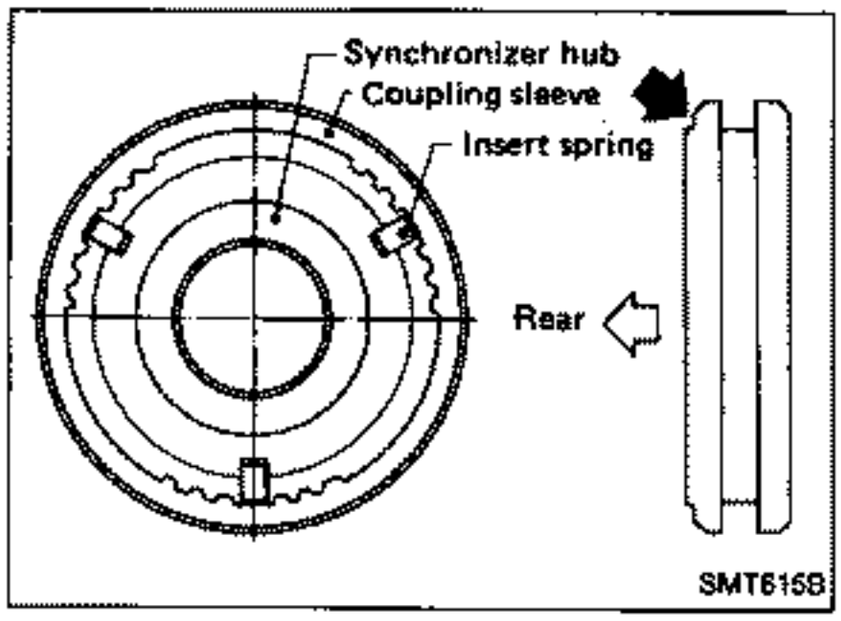

b. Assemble 3rd & 4th synchronizer.

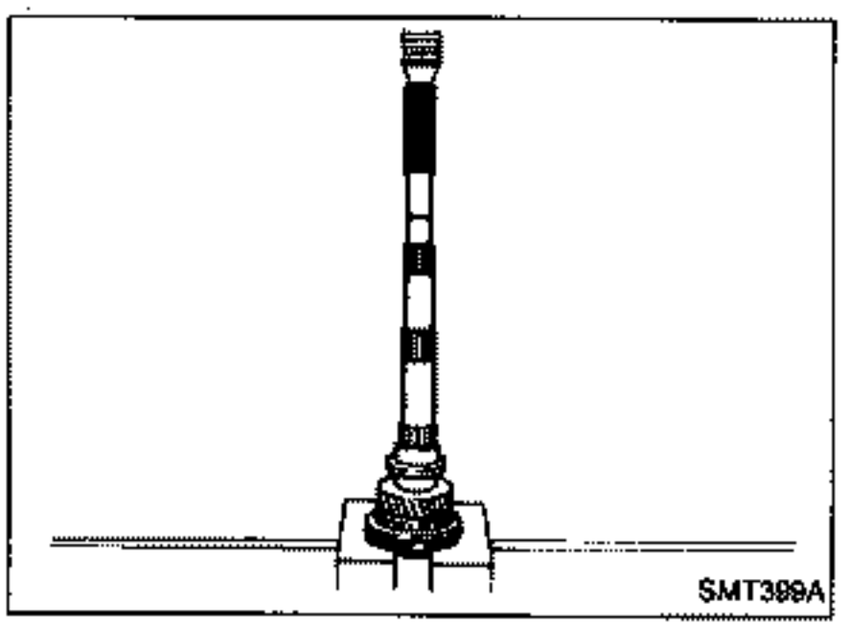

c. Press on 3rd & 4th synchronizer assembly together with 3rd main gear and 3rd gear needle bearing.
Pay attention to direction of synchronizer assembly.

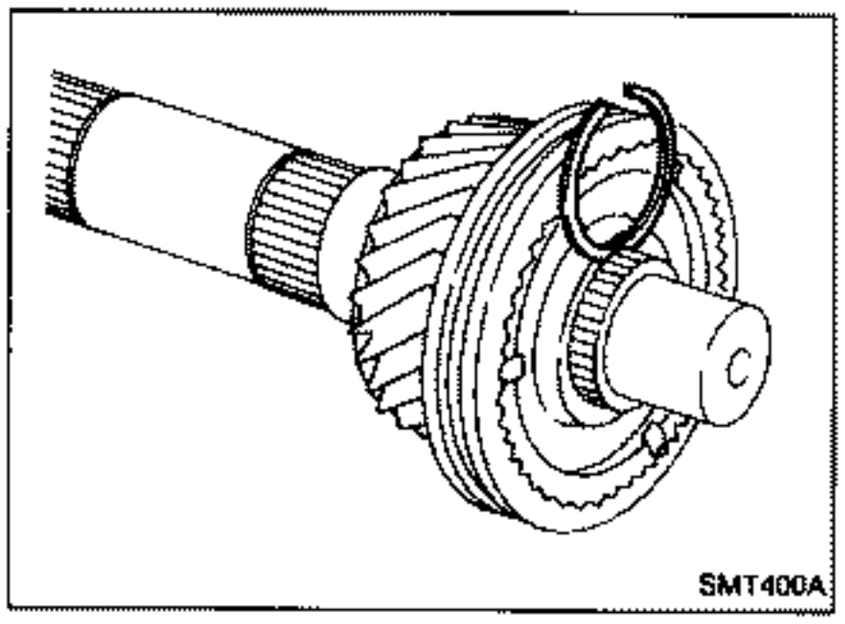

d. Select proper snap ring to minimize clearance of groove.
Allowable clearance of groove:
0 - 0.1 mm (0 - 0.004 in)

Mainshaft front snap ring

Thickness mm (in)	part number
1.89 (0.0744)	32204-01G00
1.98 (0.0780)	32204-01G01
2.05 (0.0807)	32204-01G02
2.12 (0.0835)	32204-01G03
2.19 (0.0862)	32204-01G04

e. Install selected snap ring on mainshaft.

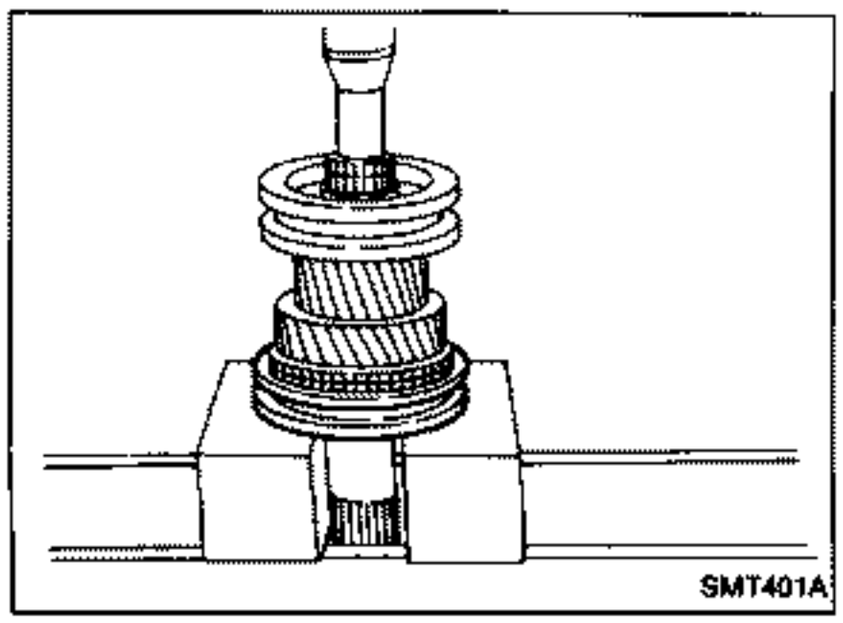

f. Press on 1st & 2nd synchronizer assembly together with 2nd main gear and 2nd gear needle bearing.

Gear Components (Cont'd)

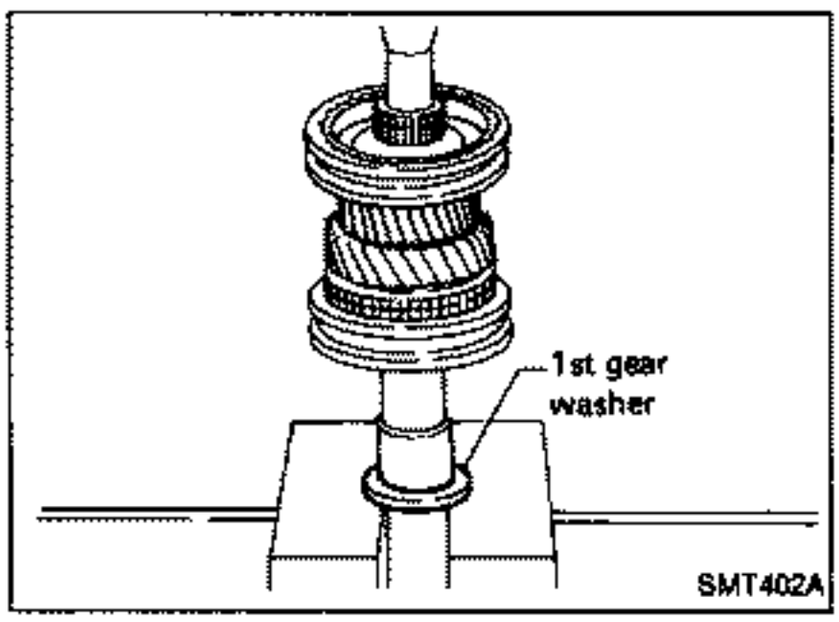

g. Press on 1st gear bushing using 1st gear washer.
h. Install 1st main gear and needle bearing.

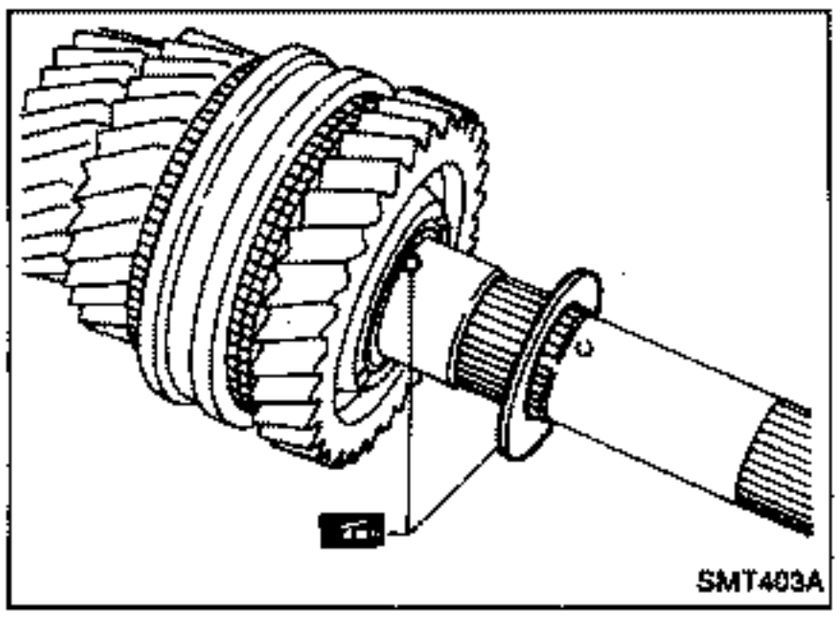

i. Install steel ball and 1st gear washer.
Apply multi-purpose grease to steel ball and 1st gear washer before installing.

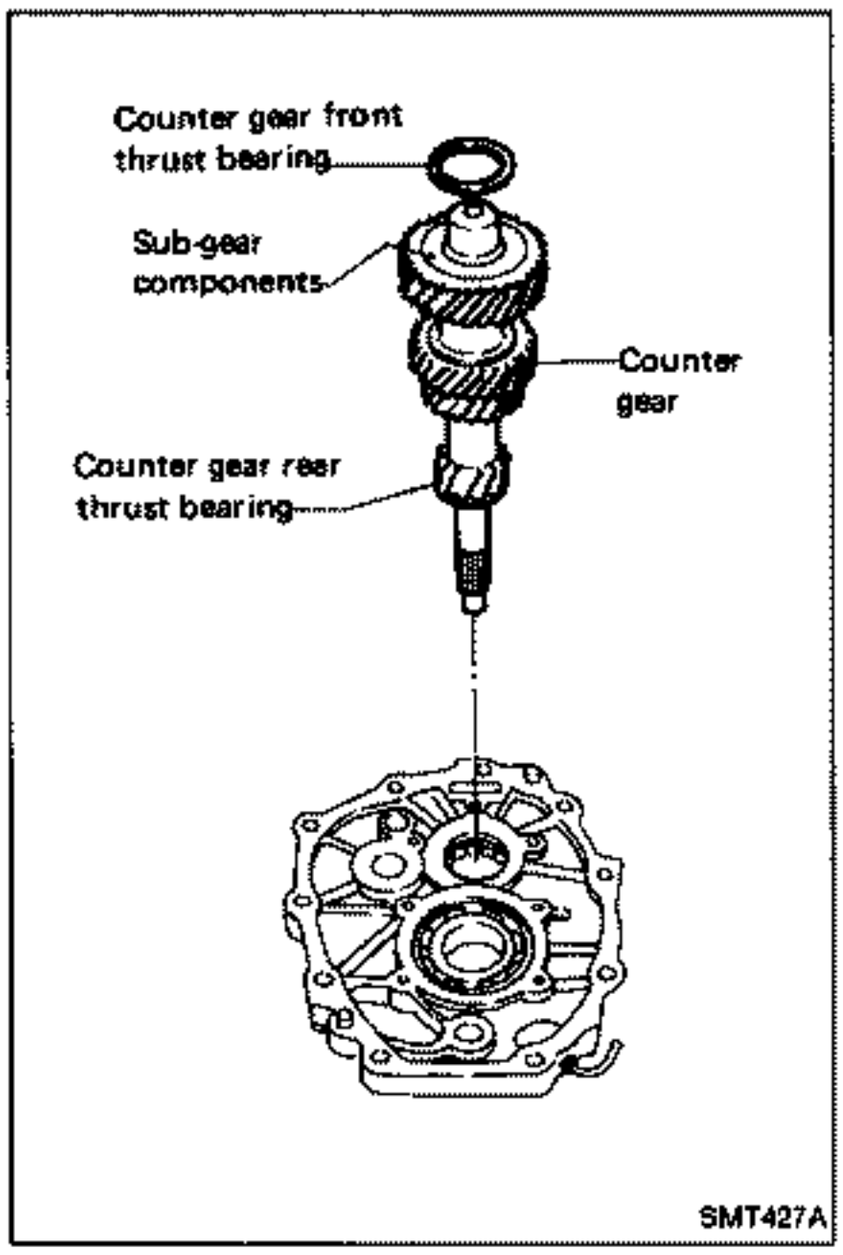

5. Select proper counter gear front bearing shim when replacing transmission case, counter gear, counter gear thrust bearing or sub-gear components.
a. Install counter gear with sub-gear components, counter gear front and rear thrust bearing on adapter plate.
b. Remove counter gear front bearing shim from transmission case.
c. Place adapter plate and counter gear assembly in transmission case (case inverted).

Gear Components (Cont'd)

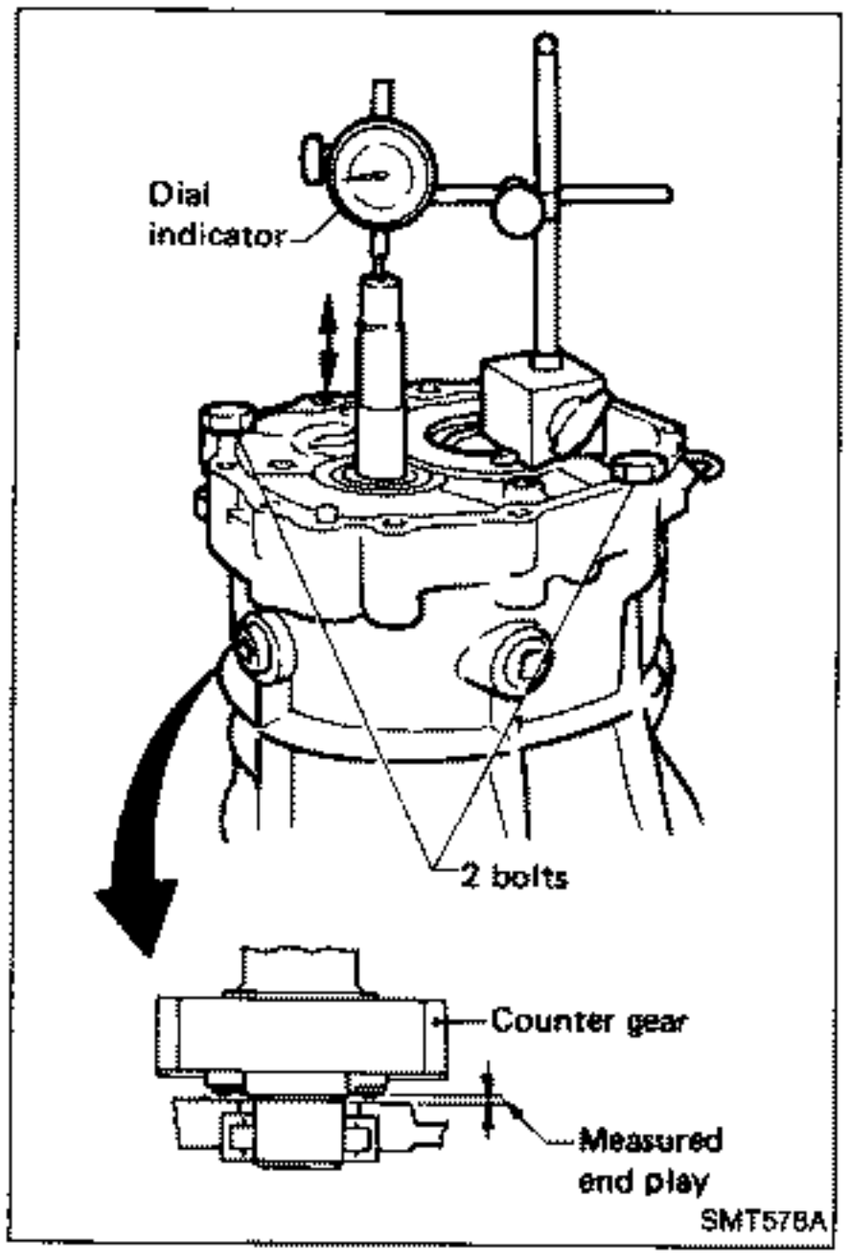

d. Tighten adapter plate to transmission case using 2 bolts.
e. Place dial indicator on rear end of counter gear.
f. Move counter gear up and down and measure dial indicator deflection.
g. Select proper shim using table below as a guide.

Counter gear end play:

0.10 - 0.25 mm (0.0039 - 0.0098 in)

Table for selecting proper counter gear front bearing shim

Dial indicator deflection mm (in)	Thickness of proper washer mm (in)	Part number
0.93 - 1.02 (0.0366 - 0.0402)	0.8 (0.031)	32218-01G00
1.03 - 1.12 (0.0406 - 0.0441)	0.9 (0.035)	32218-01G01
1.13 - 1.22 (0.0445 - 0.0480)	1.0 (0.039)	32218-01G02
1.23 - 1.32 (0.0484 - 0.0520)	1.1 (0.043)	32218-01G03
1.33 - 1.42 (0.0524 - 0.0559)	1.2 (0.047)	32218-01G04
1.43 - 1.52 (0.0563 - 0.0598)	1.3 (0.051)	32218-01G05
1.53 - 1.62 (0.0602 - 0.0638)	1.4 (0.055)	32218-01G06

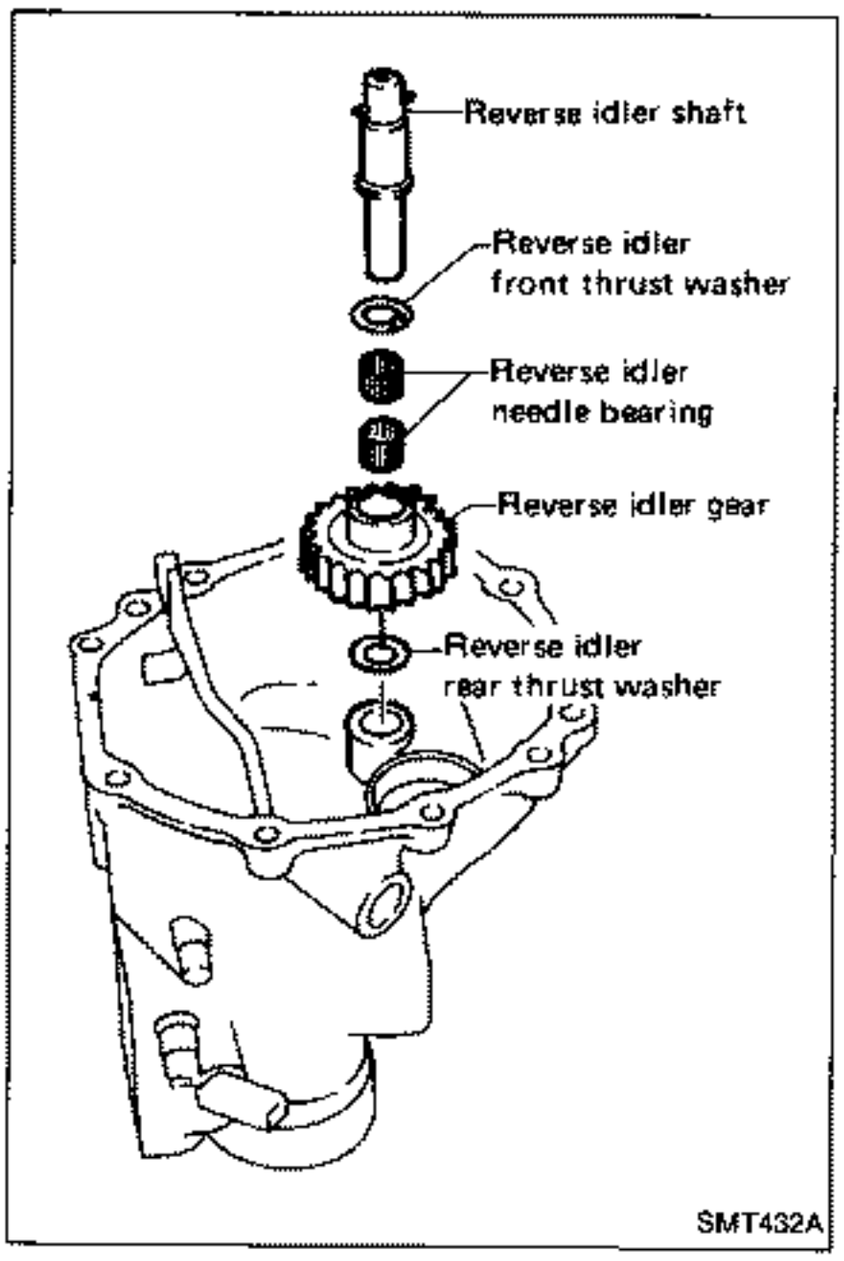

6. Select proper reverse idler rear thrust washer when replacing rear extension, reverse idler gear, reverse idler shaft or reverse idler thrust washer.

a. Install reverse idler gear, reverse idler needle bearings, reverse idler thrust washers and reverse idler shaft into rear extension.

When replacing reverse idler rear washer, install either A or B.

Reverse idler rear thrust washer

	Thickness mm (in)	Part number
A	1.97 (0.0776)	32284-01G10
B	2.07 (0.0815)	32284-01G11

Gear Components (Cont'd)

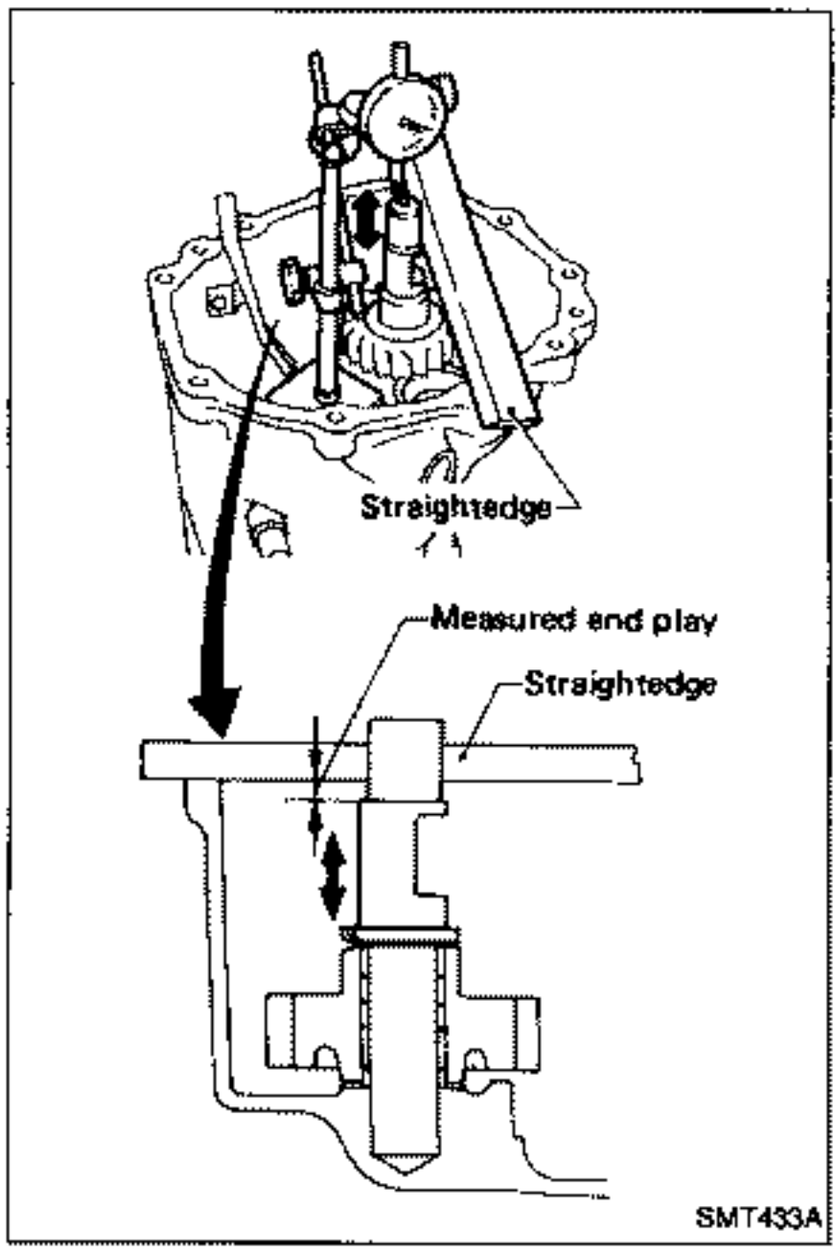

b. Place dial indicator on front end of reverse idler shaft.
c. Put straightedge on front surface of rear extension as a stopper of reverse idler shaft.
d. Move reverse idler shaft up and down and measure reverse idler gear end play.

Reverse idler gear end play:
0.30 - 0.53 mm (0.0118 - 0.0209 in)

e. If not within specification, replace reverse idler rear thrust washer with the other (A or B) and check again.

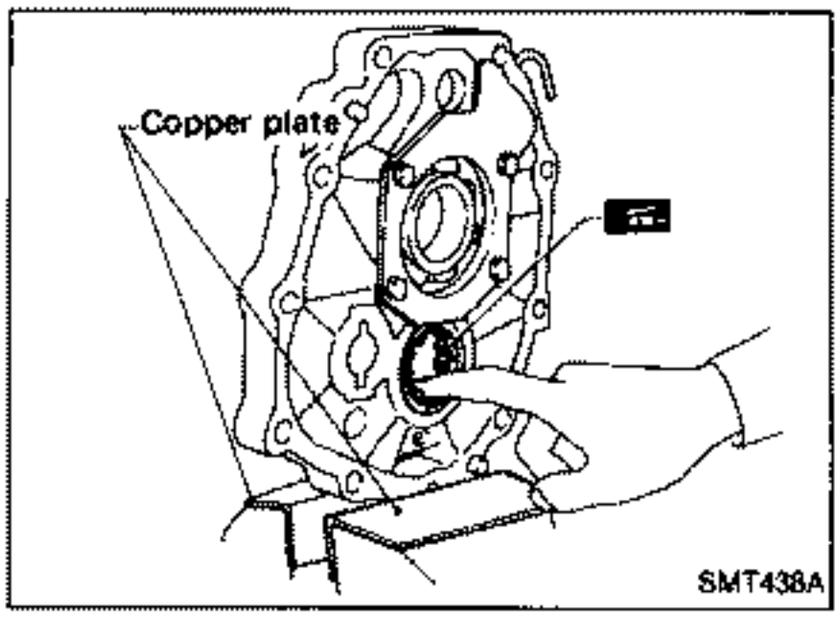

7. Install mainshaft and counter gear on adapter plate and main drive gear on mainshaft.

a. Mount adapter plate on vise and apply multi-purpose grease to counter gear rear bearing.

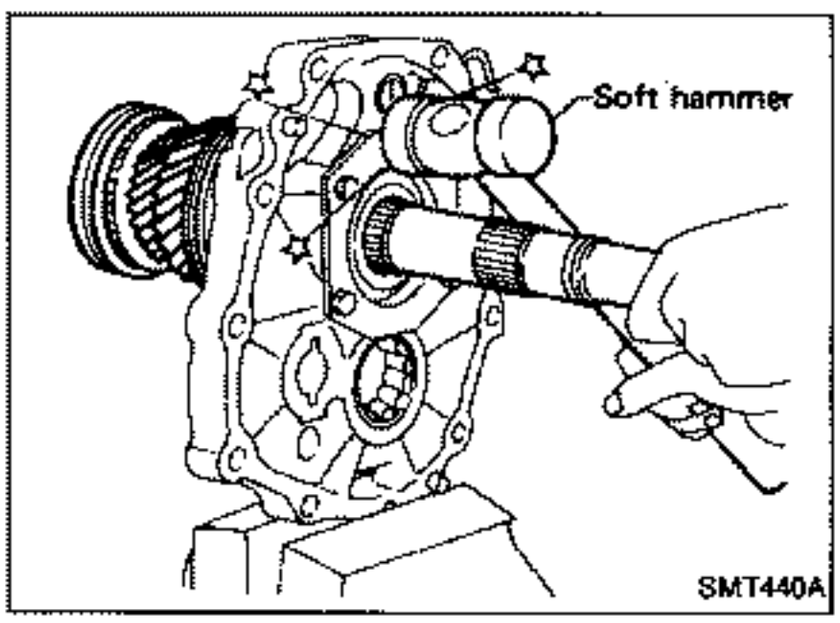

b. Install mainshaft a little on mainshaft front bearing.

To allow for installation of counter gear, do not install mainshaft completely.

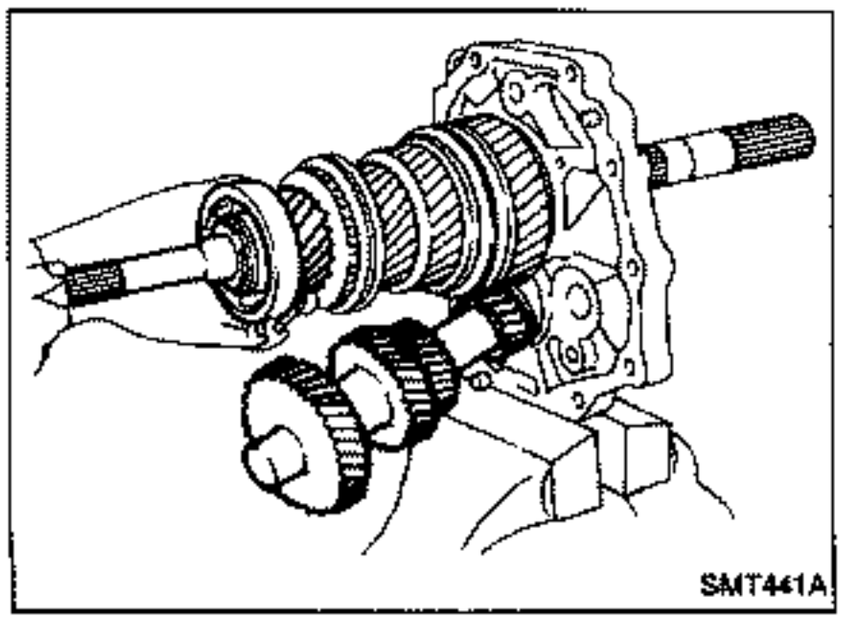

c. Install counter gear on counter gear rear bearing and install main drive gear, pilot bearing and spacer on mainshaft.

Gear Components (Cont'd)

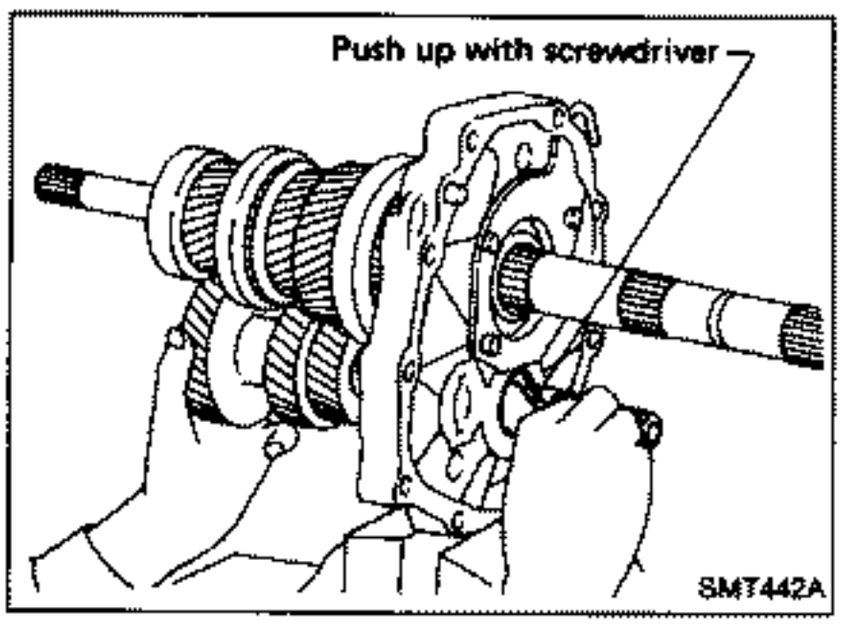

When installing counter gear into counter gear rear bearing, push up on upper roller of counter gear rear bearing with screwdriver.

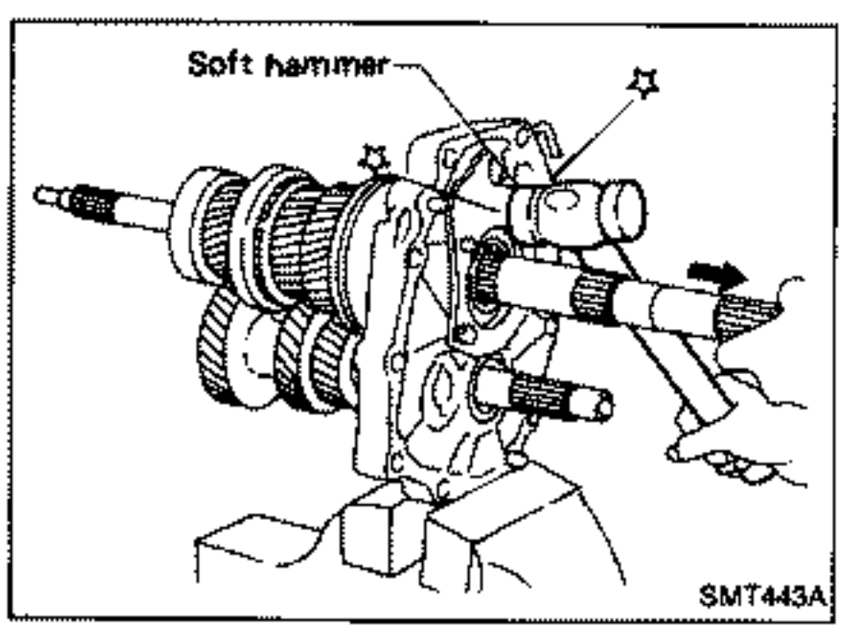

d. Install mainshaft and counter gear completely by tapping rear side of adapter plate and pulling mainshaft.

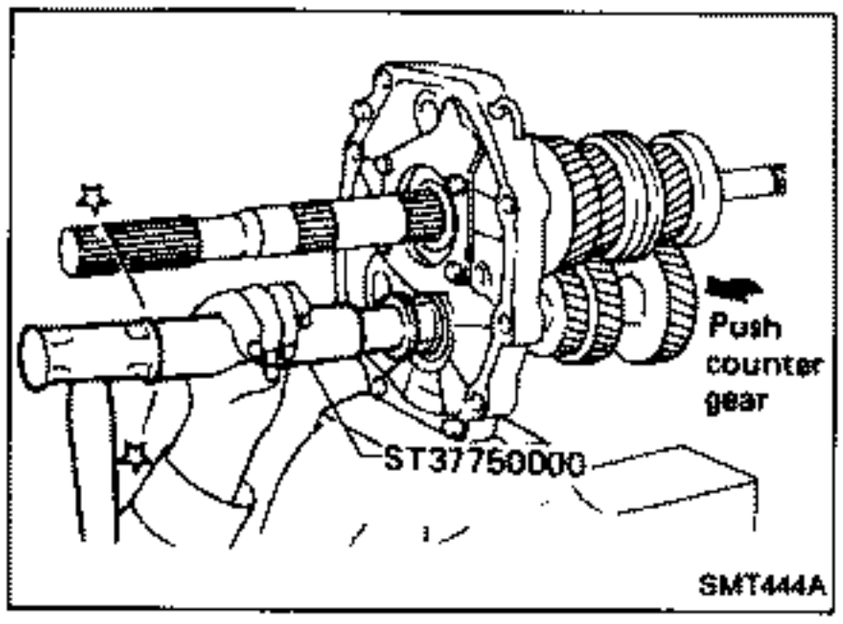

8. Install rear side components on mainshaft and counter gear.

a. Install O.D. gear bushing while pushing on the front of counter gear.

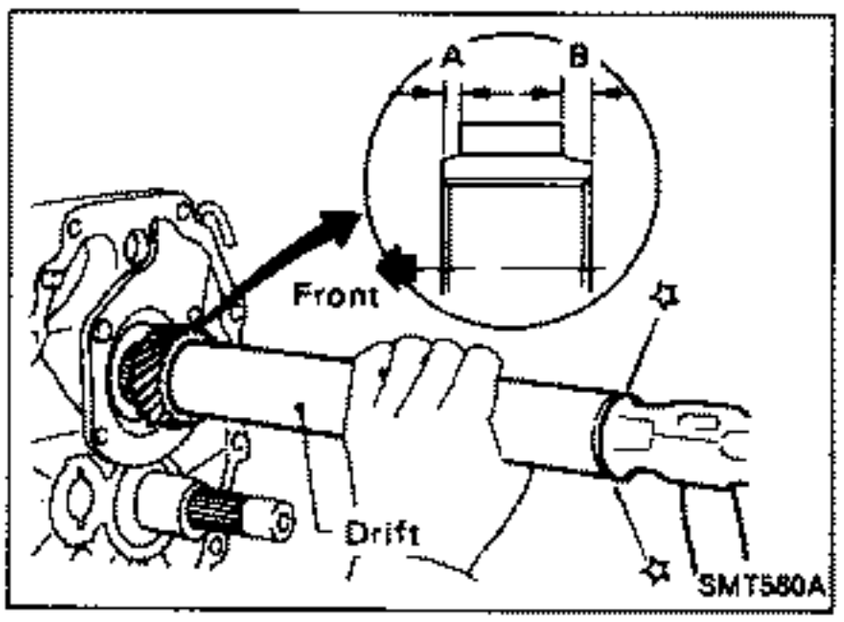

b. Install O.D. main gear.

Pay attention to direction of O.D. main gear. (B is wider than A as shown at left.)

c. Install adapter plate with gear assembly onto transmission case.

d. Install O.D. gear needle bearing and then install O.D. counter gear and reverse idler shaft.

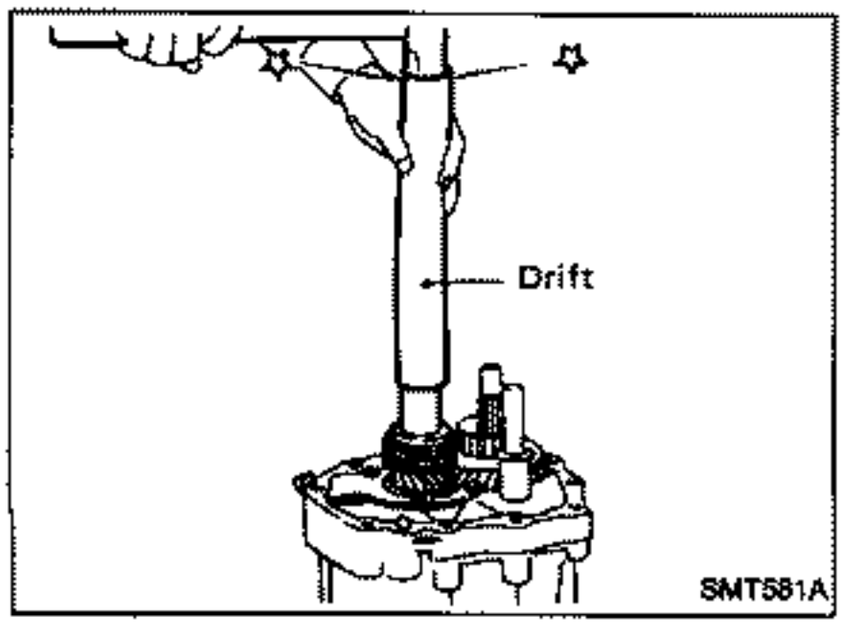

e. Install reverse gear bushing.

Gear Components (Cont'd)

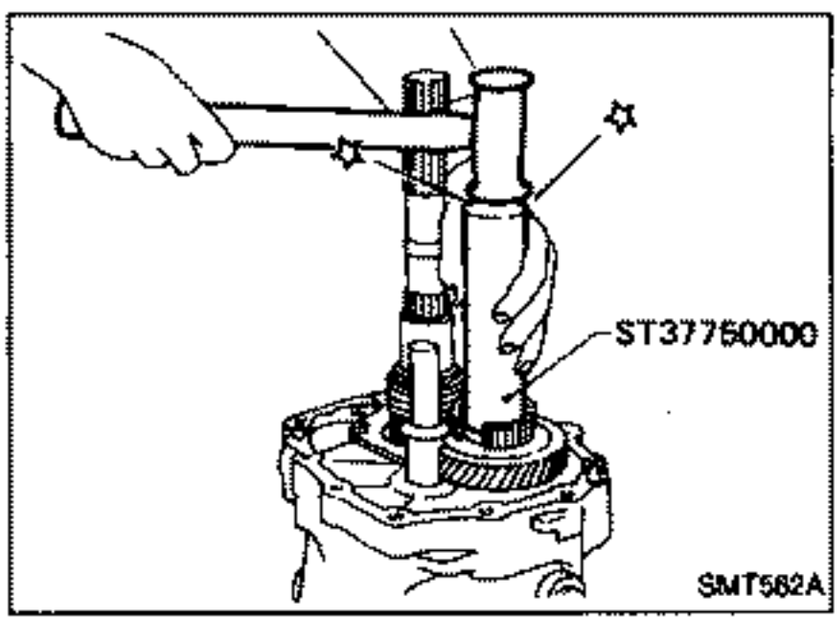

f. Install reverse cone.

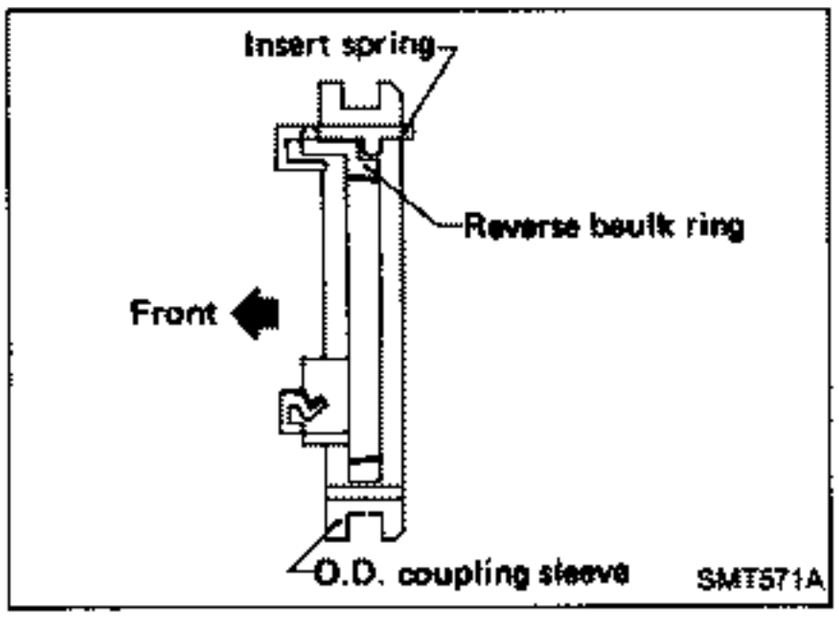

g. Install insert springs and reverse baulk ring on O.D. coupling sleeve. Then install them and O.D. baulk ring on O.D. counter gear.

Pay attention to direction of O.D. coupling sleeve.

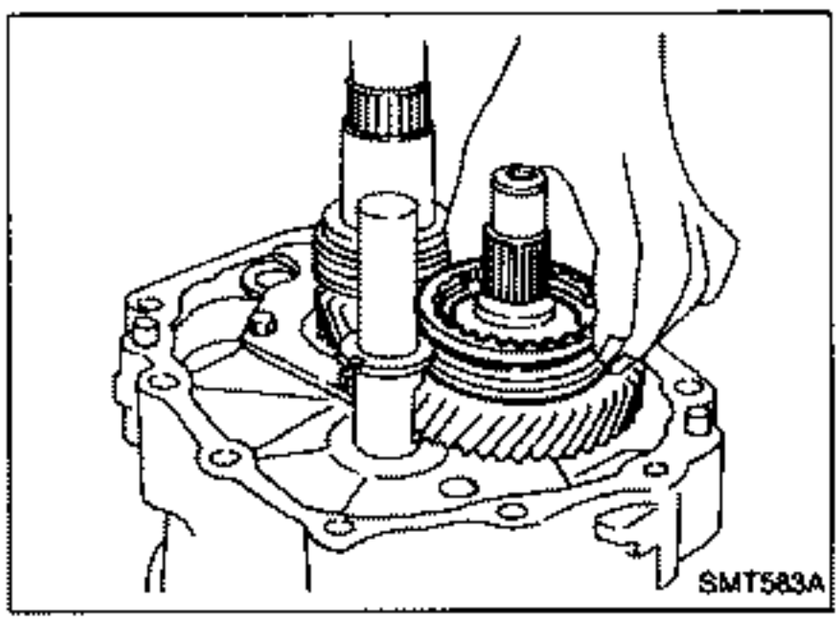

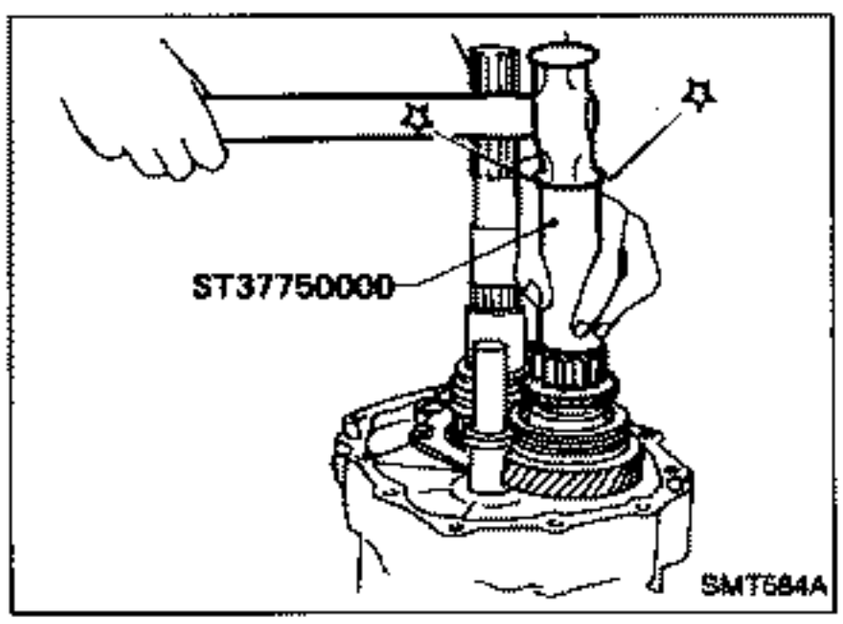

h. Install reverse counter gear.

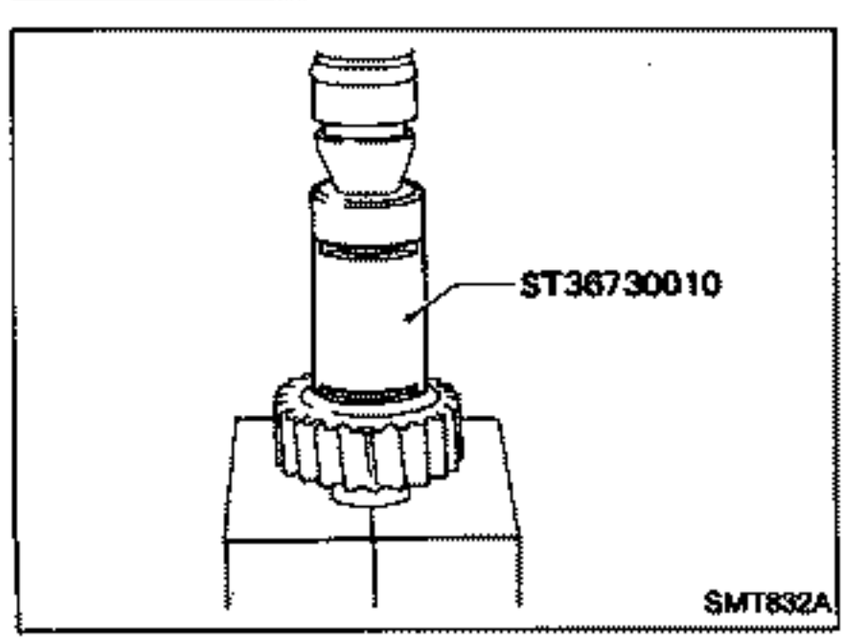

i. Install sub-gear on reverse idler gear.
j. Install reverse gear needle bearing and then install reverse main gear, reverse idler gear and reverse idler thrust washers.

Gear Components (Cont'd)

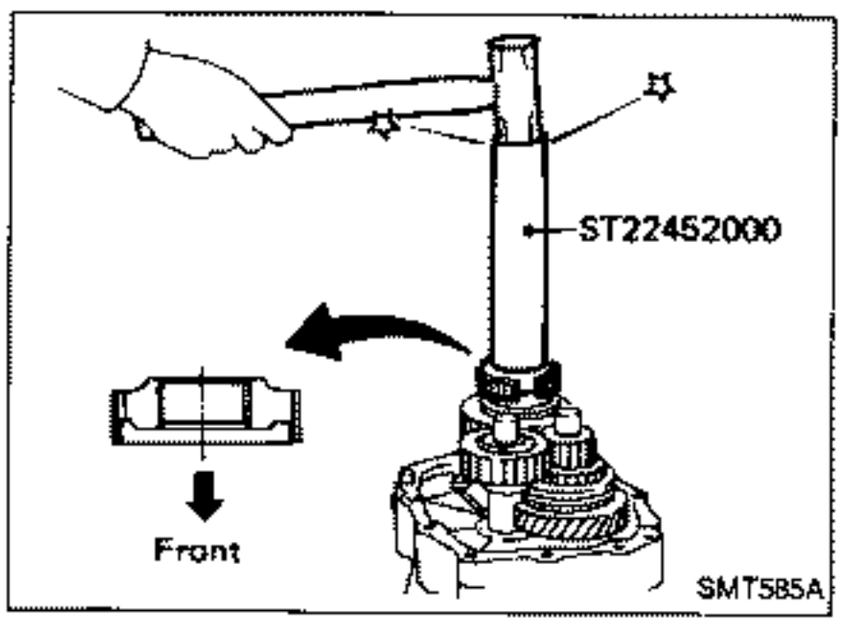

k. Install reverse hub.
Pay attention to its direction.

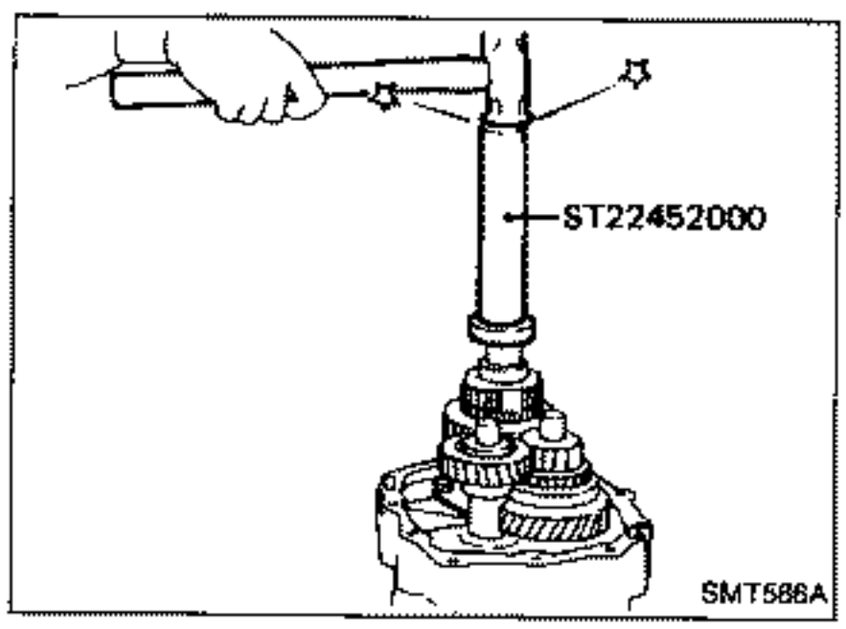

l. Install mainshaft spacer and mainshaft rear bearing.
m. Install speedometer drive gear.

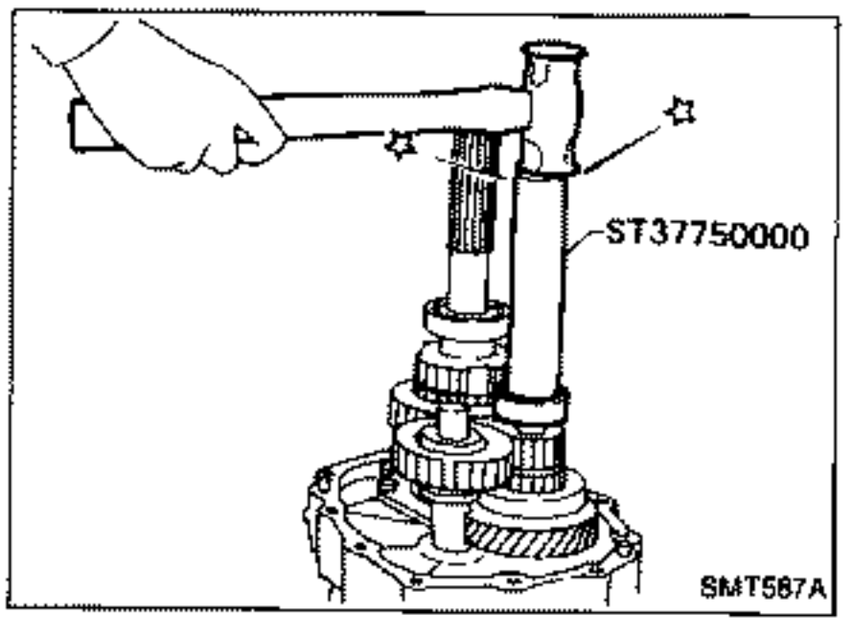

n. Install counter gear rear end bearing.
o. Separate adapter plate from transmission case and mount adapter plate on vise again.

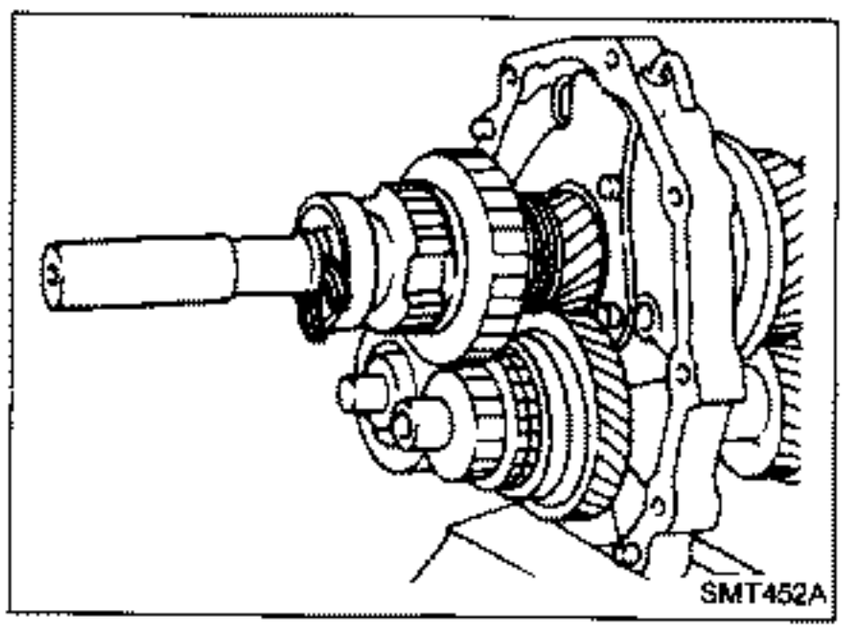

p. Select proper mainshaft C-ring to minimize clearance of groove.
Allowable clearance of groove:
0 - 0.1 mm (0 - 0.004 in)

Mainshaft C-ring

Thickness mm (in)	Part number	Thickness mm (in)	Part number
2.63 (0.1035)	32348-01G15	3.19 (0.1256)	32348-01G07
2.70 (0.1063)	32348-01G00	3.26 (0.1283)	32348-01G08
2.77 (0.1091)	32348-01G01	3.33 (0.1311)	32348-01G09
2.84 (0.1118)	32348-01G02	3.40 (0.1339)	32348-01G10
2.91 (0.1146)	32348-01G03	3.47 (0.1366)	32348-01G11
2.98 (0.1173)	32348-01G04	3.54 (0.1394)	32348-01G12
3.05 (0.1201)	32348-01G05	3.61 (0.1421)	32348-01G13
3.12 (0.1228)	32348-01G06	3.68 (0.1449)	32348-01G14

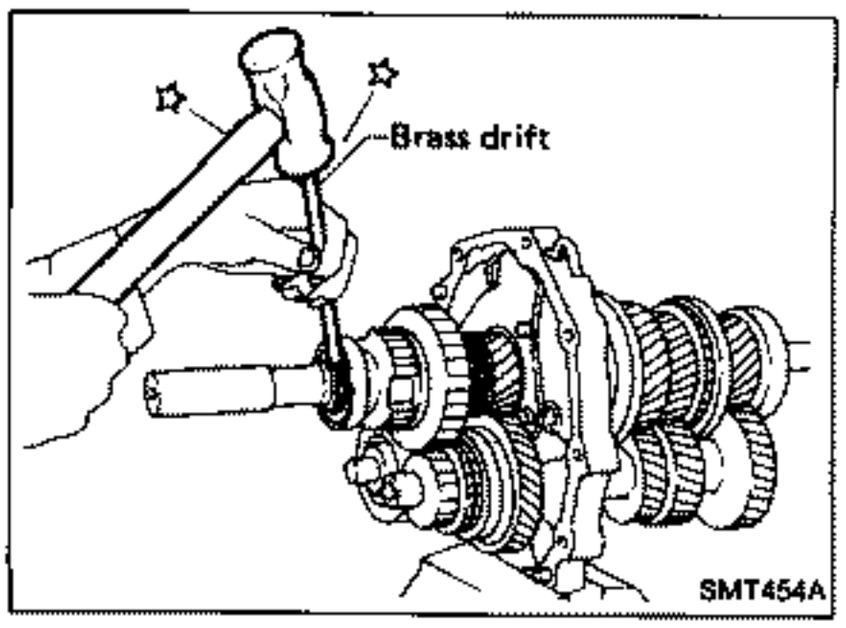

q. Install selected C-ring, C-ring holder and mainshaft rear snap ring.

Gear Components (Cont'd)

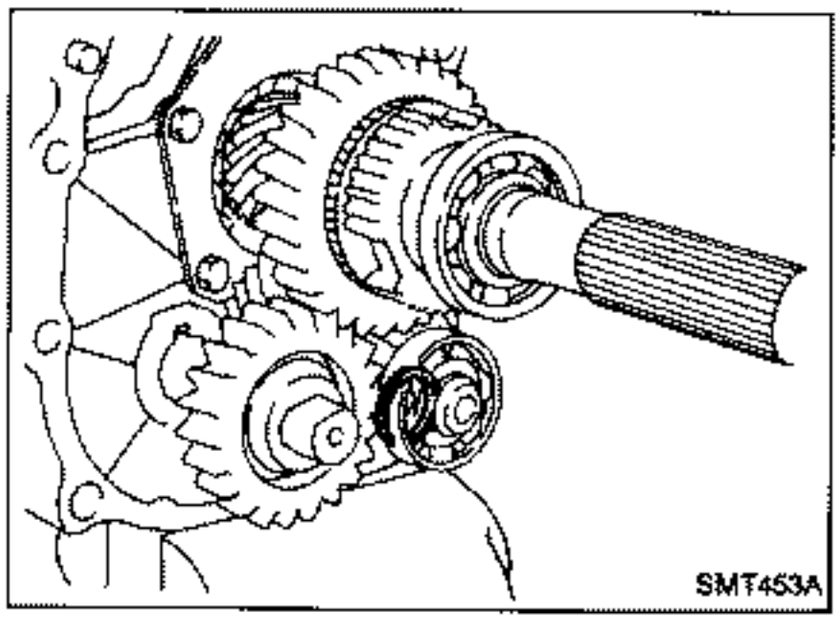

r. Install spacer and then select proper counter gear rear snap ring to minimize clearance of groove.
Allowable clearance of groove:
0 - 0.1 mm (0 - 0.004 in)

Counter gear rear snap ring

Thickness mm (in)	Part number
1.26 (0.0496)	32236-01G08
1.32 (0.0520)	32236-01G00
1.38 (0.0543)	32236-01G01
1.44 (0.0567)	32236-01G02
1.50 (0.0591)	32236-01G03
1.56 (0.0614)	32236-01G04
1.62 (0.0638)	32236-01G05
1.68 (0.0661)	32236-01G06
1.74 (0.0685)	32236-01G07

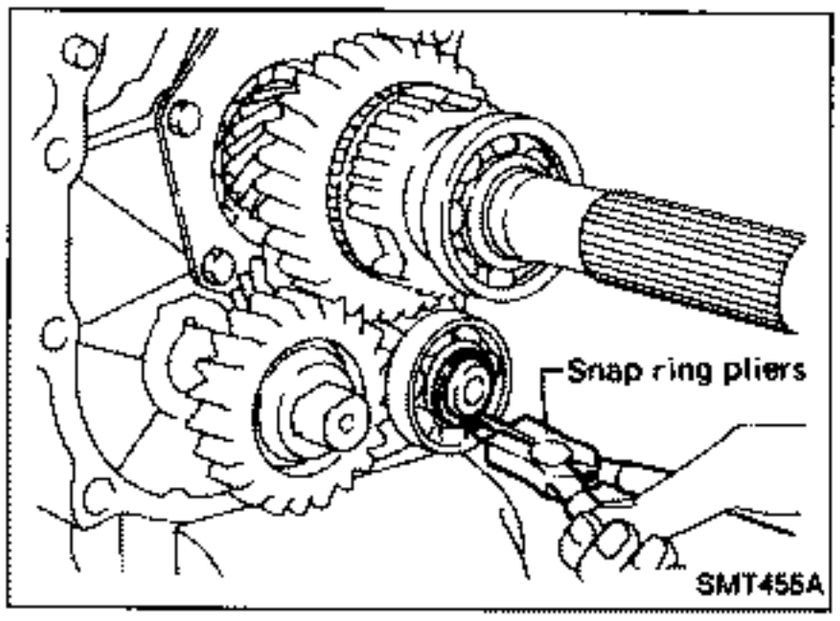

s. Install selected counter gear rear snap ring.

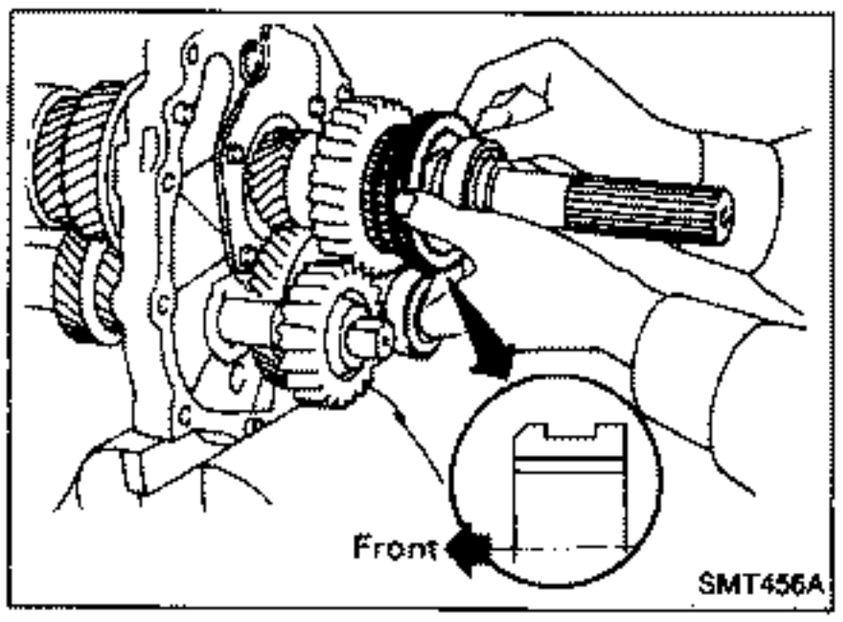

t. Install reverse coupling sleeve.
Pay attention to its direction.

u. Measure each gear end play as a final check — Refer to "DISASSEMBLY".

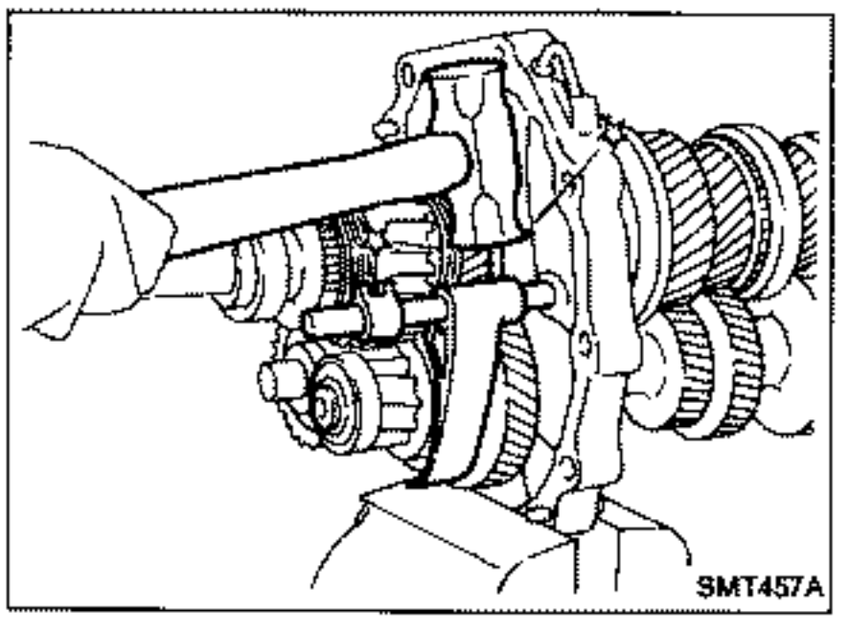

Shift Control Components

1. Install O.D. fork rod and O.D. shift fork. Then install retaining pin into O.D. shift fork.
2. Install 1st & 2nd, 3rd & 4th and reverse shift forks onto coupling sleeve.

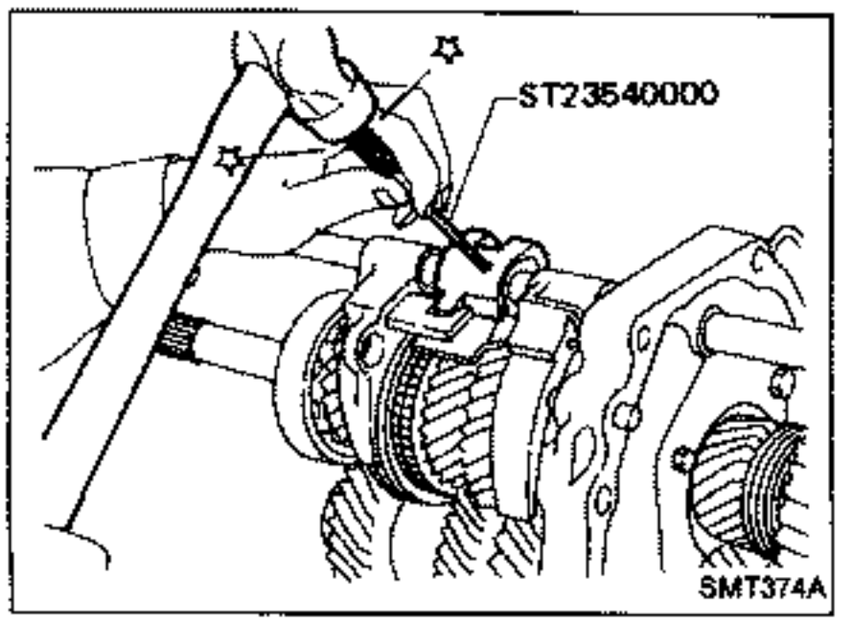

3. Install striking rod into hole of shift forks, striking lever and interlock and then install retaining pin into striking lever.
Make sure that striking rod moves smoothly.

Shift Control Components (Cont'd)

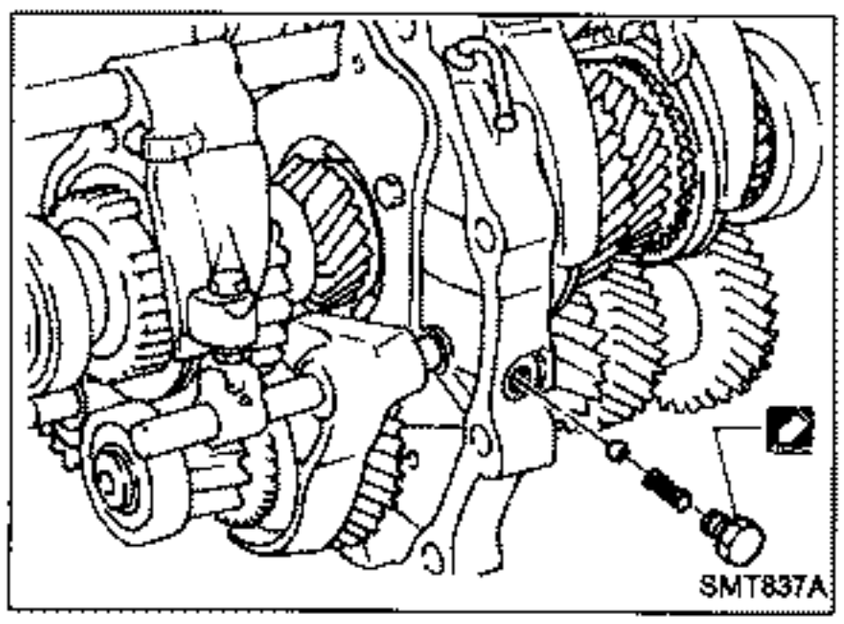

4. Install check ball, return spring and check ball plug.
   Apply sealant to thread of check ball plug.

Case Components

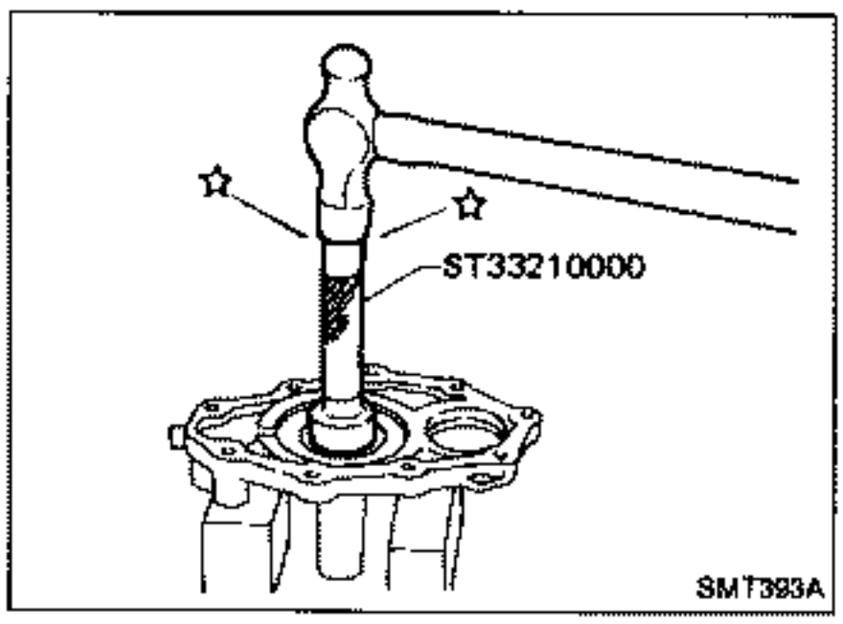

1. Install front cover oil seal.
   Apply multi-purpose grease to seal lip.
2. Install selected counter gear front bearing shim onto transmission case.
   Apply multi-purpose grease.
3. Apply sealant to mating surface of transmission case.

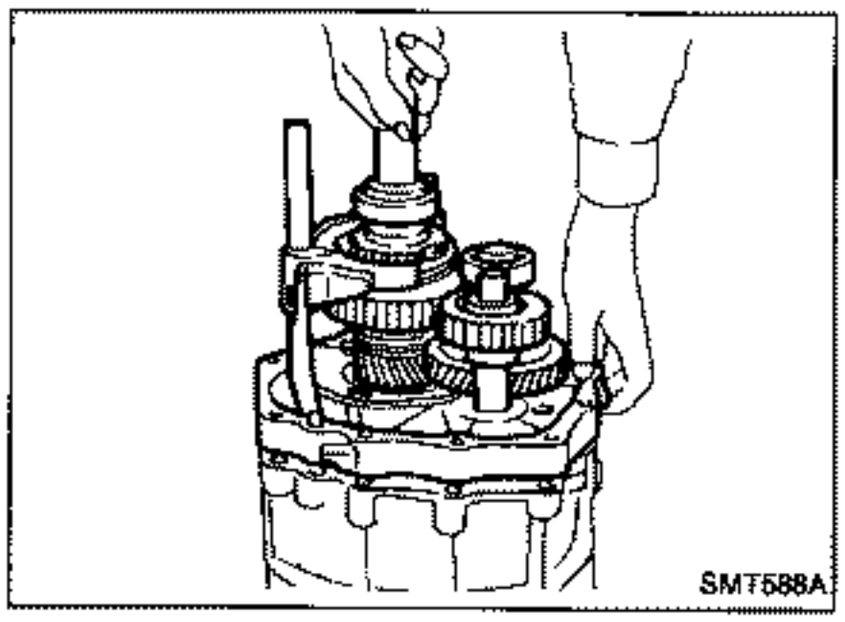

4. Install gear assembly onto transmission case.
5. Install check spring and check ball into interlock stopper.
   Apply multi-purpose grease to check ball.

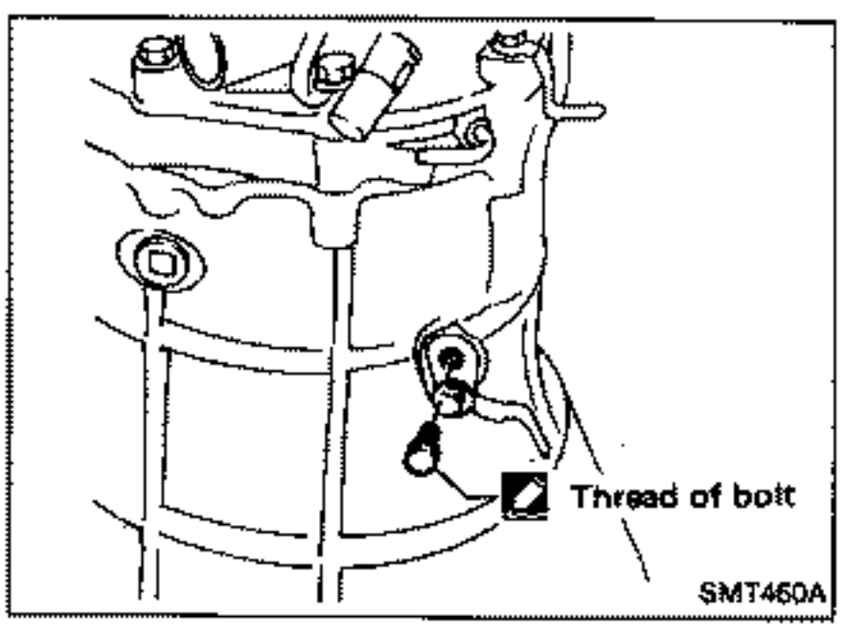

6. Install interlock stopper assembly and then tighten check ball plug.
   Apply sealant to thread of check ball plug.

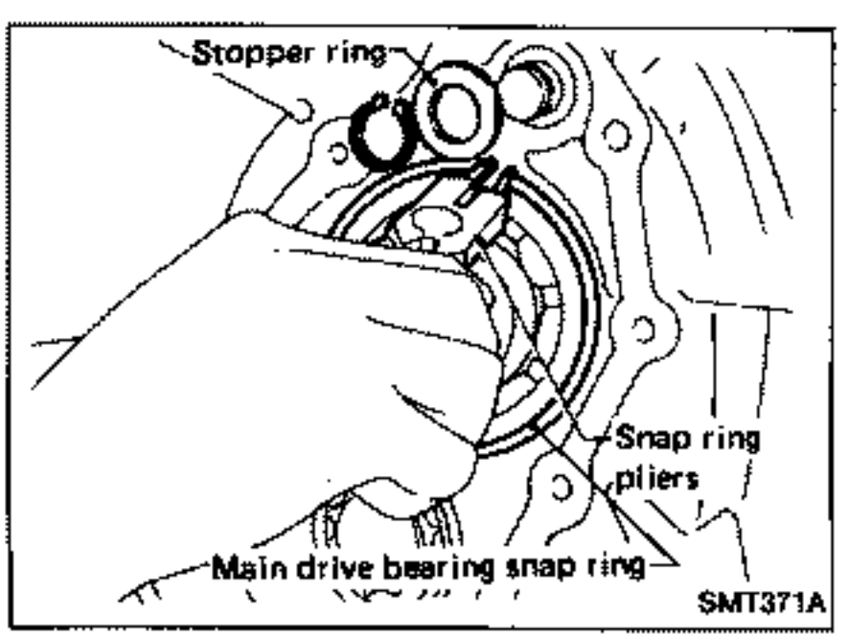

7. Install stopper ring and main drive bearing snap ring.

Case Components (Cont'd)

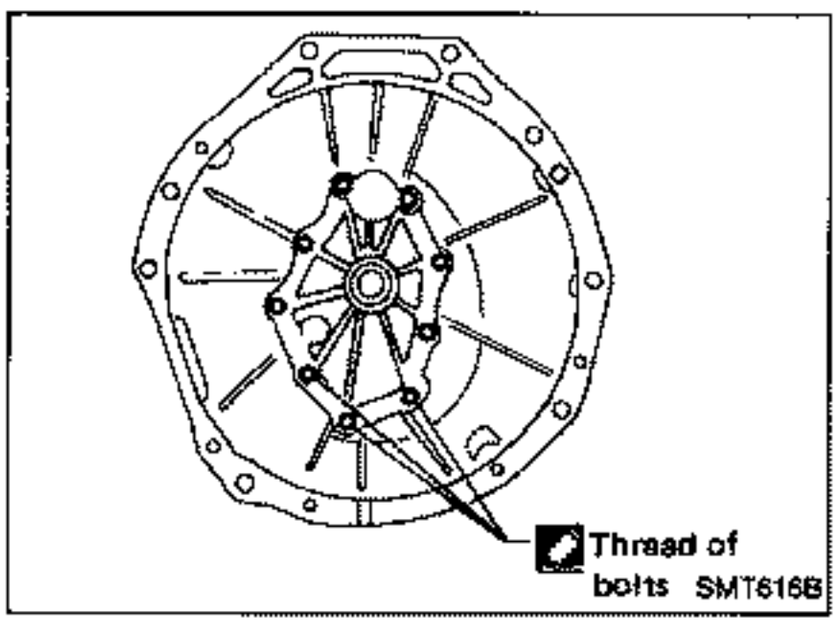

8. Install front cover and gasket.
   Apply sealant to thread of 3 bolts shown left.
9. Apply sealant to mating surface of adapter plate.

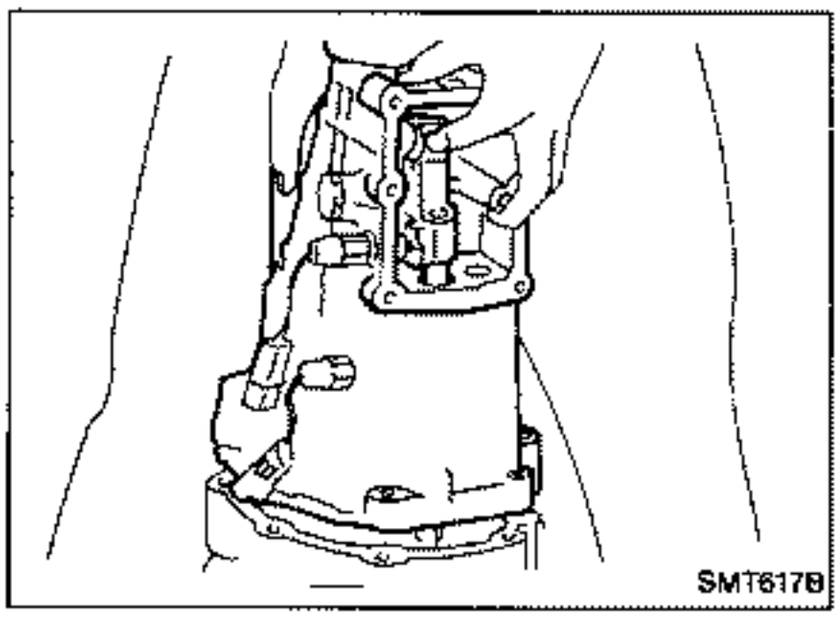

10. Install rear extension together with striking arm.

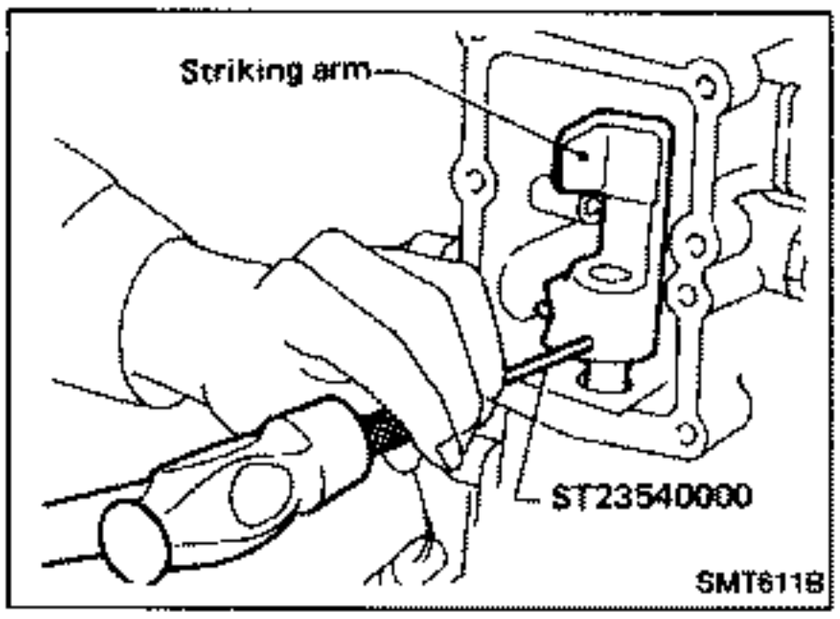

11. Install retaining pin into striking arm.

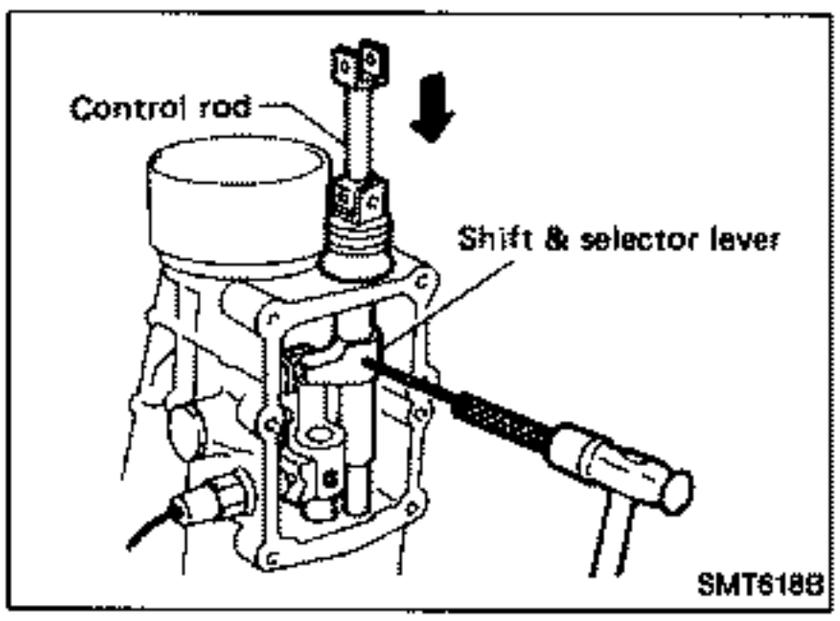

12. Install control rod.
    Be careful not to damage control rod oil seal and dust cover.
13. Install retaining pin into shift & selector lever.

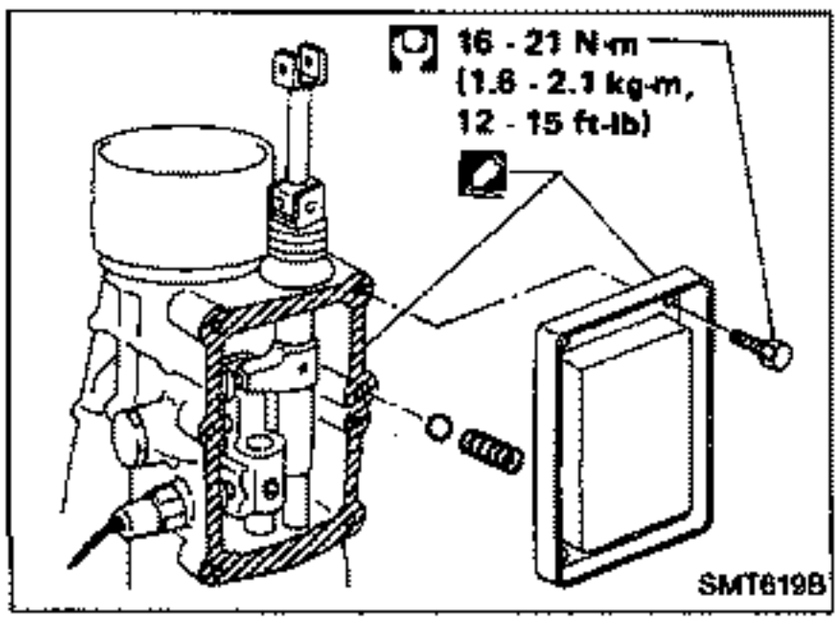

14. Install return spring and check ball and then install control housing.
    Apply sealant to mating surface of rear extension.
15. Tighten control housing bolts.

FOR EUROPE ONLY

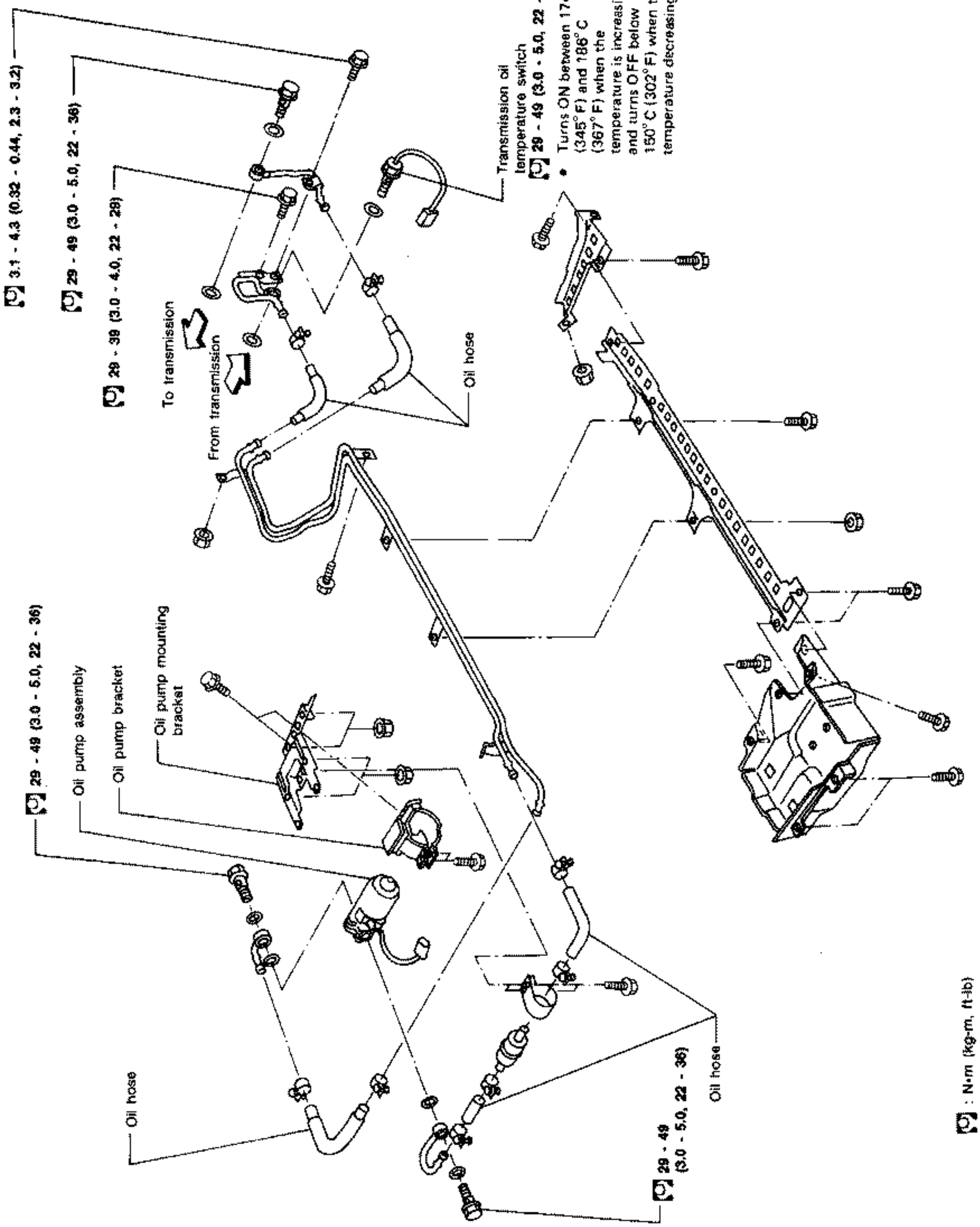

SMT721B

- For Circuit Diagram, Wiring Diagram and oil pump operation, refer to "DIFFERENTIAL OIL COOLER SYSTEM" in PD section.

General Specifications

Engine	VG30DE	VG30DETT
Transmission model	RS5R30A	
Shift pattern	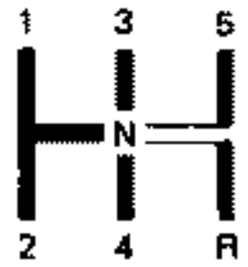	
Synchromesh type	Warner	
Gear ratio		
1st	3.214	
2nd	1.925	
3rd	1.302	
4th	1.000	
O.D.	0.752	
Reverse	3.369	
Number of teeth		
Main drive gear	23	
Main gear		
1st	31	
2nd	30	
3rd	29	
O.D.	24	
Reverse	30	
Counter drive gear	31	
Counter gear		
1st	13	
2nd	21	
3rd	30	
O.D.	43	
Reverse	12	
Reverse idler gear	22	
Oil capacity ℓ (Imp pt)	2.8 (4-7/8)	3.1 (5-1/2)

Inspection and Adjustment

GEAR END PLAY

Gear	End play mm (in)
1st main gear	0.23 - 0.33 (0.0091 - 0.0130)
2nd main gear	0.23 - 0.33 (0.0091 - 0.0130)
3rd main gear	0.23 - 0.33 (0.0091 - 0.0130)
O.D. counter gear	0.23 - 0.33 (0.0091 - 0.0130)
Reverse main gear	0.33 - 0.43 (0.0130 - 0.0169)
Counter gear	0.10 - 0.25 (0.0039 - 0.0098)
Reverse idler gear	0.30 - 0.53 (0.0118 - 0.0209)

CLEARANCE BETWEEN BAULK RING AND GEAR

1st, main drive and O.D. baulk ring

Unit: mm (in)

	Standard	Wear limit
1st	1.05 - 1.3 (0.0413 - 0.0512)	0.7 (0.028)
Main drive	1.05 - 1.3 (0.0413 - 0.0512)	0.7 (0.028)
O.D.	1.05 - 1.3 (0.0413 - 0.0512)	0.7 (0.028)

2nd and 3rd baulk ring

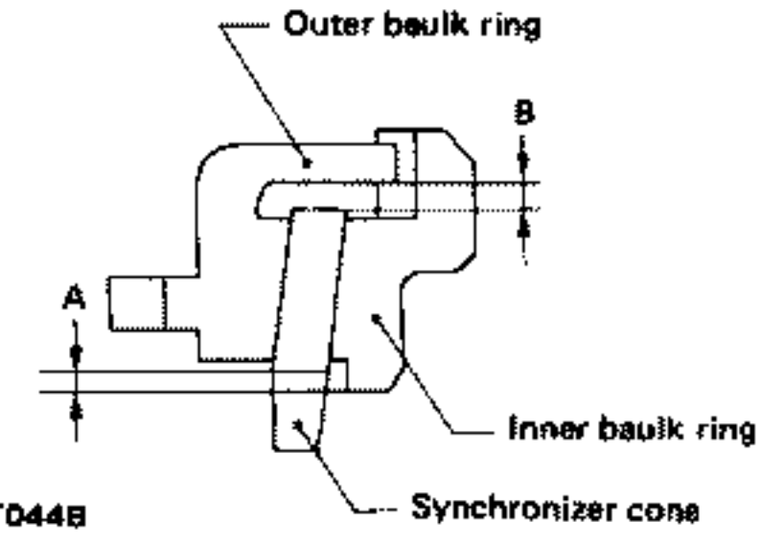

Unit: mm (in)

Dimension	Standard	Wear limit
A	0.6 - 1.1 (0.024 - 0.043)	0.2 (0.008)
B	0.7 - 0.9 (0.028 - 0.035)	0.2 (0.008)

DISTANCE BETWEEN REAR SURFACE OF REVERSE CONE AND REVERSE BAULK RING

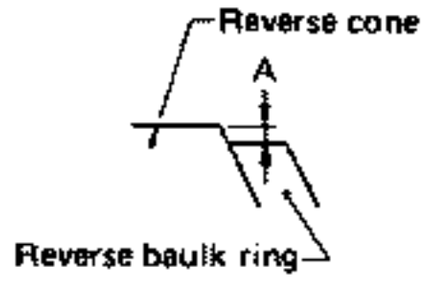

Unit: mm (in)

	Standard	Wear limit
Dimension "A"	−0.1 to 0.35 (−0.0039 to 0.0138)	0.7 (0.028)

AVAILABLE SNAP RING

Main drive gear snap ring

Allowable clearance	0 - 0.1 mm (0 - 0.004 in)
Thickness mm (in)	Part number
1.89 (0.0744)	32204-01G00
1.98 (0.0780)	32204-01G01
2.05 (0.0807)	32204-01G02
2.12 (0.0835)	32204-01G03
2.19 (0.0862)	32204-01G04

Mainshaft front snap ring

Allowable clearance	0 - 0.1 mm (0 - 0.004 in)
Thickness mm (in)	Part number
1.89 (0.0744)	32204-01G00
1.98 (0.0780)	32204-01G01
2.05 (0.0807)	32204-01G02
2.12 (0.0835)	32204-01G03
2.19 (0.0862)	32204-01G04

Counter gear rear snap ring

Allowable clearance	0 - 0.1 mm (0 - 0.004 in)
Thickness mm (in)	Part number
1.26 (0.0496)	32236-01G08
1.32 (0.0520)	32236-01G00
1.38 (0.0543)	32236-01G01
1.44 (0.0567)	32236-01G02
1.50 (0.0591)	32236-01G03
1.56 (0.0614)	32236-01G04
1.62 (0.0638)	32236-01G05
1.68 (0.0661)	32236-01G06
1.74 (0.0685)	32236-01G07

Inspection and Adjustment (Cont'd)

AVAILABLE C-RING

Mainshaft C-ring

Allowable clearance: 0 - 0.1 mm (0 - 0.004 in)

Thickness mm (in)	Part number	Thickness mm (in)	Part number
2.63 (0.1035)	32348-01G15	3.19 (0.1256)	32348-01G07
2.70 (0.1063)	32348-01G00	3.26 (0.1283)	32348-01G08
2.77 (0.1091)	32348-01G01	3.33 (0.1311)	32348-01G09
2.84 (0.1118)	32348-01G02	3.40 (0.1339)	32348-01G10
2.91 (0.1146)	32348-01G03	3.47 (0.1366)	32348-01G11
2.98 (0.1173)	32348-01G04	3.54 (0.1394)	32348-01G12
3.05 (0.1201)	32348-01G05	3.61 (0.1421)	32348-01G13
3.12 (0.1228)	32348-01G06	3.68 (0.1449)	32348-01G14

AVAILABLE SHIM AND WASHER

Table for selecting proper counter gear front bearing shim

Dial indicator deflection mm (in)	Thickness of proper washer mm (in)	Part number
0.93 - 1.02 (0.0366 - 0.0402)	0.8 (0.031)	32218-01G00
1.03 - 1.12 (0.0406 - 0.0441)	0.9 (0.035)	32218-01G01
1.13 - 1.22 (0.0445 - 0.0480)	1.0 (0.039)	32218-01G02
1.23 - 1.32 (0.0484 - 0.0520)	1.1 (0.043)	32218-01G03
1.33 - 1.42 (0.0524 - 0.0559)	1.2 (0.047)	32218-01G04
1.43 - 1.52 (0.0563 - 0.0598)	1.3 (0.051)	32218-01G05
1.53 - 1.62 (0.0602 - 0.0638)	1.4 (0.055)	32218-01G06

Reverse idler thrust washer

Thickness mm (in)	Part number
1.97 (0.0776)	32284-01G10
2.07 (0.0815)	32284-01G11

AUTOMATIC TRANSMISSION

SECTION AT

CONTENTS

PREPARATION ..... AT- 2
PRECAUTIONS ..... AT- 4
A/T CONTROL DIAGRAM ..... AT- 5
ON-VEHICLE SERVICE ..... AT- 8
TROUBLE DIAGNOSES ..... AT- 12
REMOVAL AND INSTALLATION ..... AT- 96
MAJOR OVERHAUL ..... AT- 98
DISASSEMBLY AT-106
REPAIR FOR COMPONENT PARTS AT-118
ASSEMBLY AT-167
SERVICE DATA AND SPECIFICATIONS (S.D.S.) AT-187

AT

When you read wiring diagrams:
- **Read GI section, "HOW TO READ WIRING DIAGRAMS".**
- **See EL section, "POWER SUPPLY ROUTING" for power distribution circuit.**

When you perform trouble diagnoses, read GI section, "HOW TO FOLLOW FLOW CHART IN TROUBLE DIAGNOSES".

SPECIAL SERVICE TOOLS

Tool number Tool name	Description	
ST2505S001 Oil pressure gauge set ① ST25051001 Oil pressure gauge ② ST25052000 Hose ③ ST25053000 Joint pipe ④ ST25054000 Adapter ⑤ ST25055000 Adapter	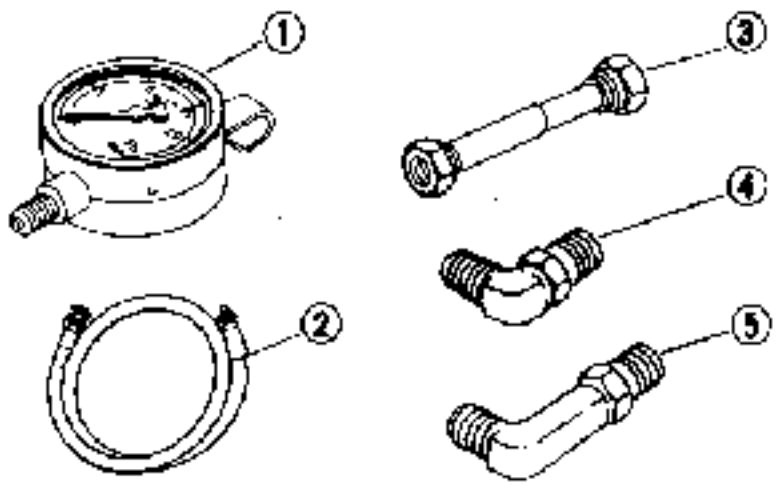	Measuring line pressure
KV31101201 Oil pressure gauge adapter	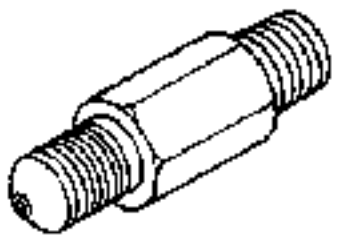	Measuring line pressure
ST07870000 Transmission case stand	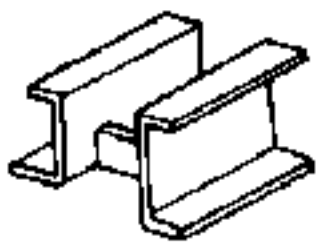	Disassembling and assembling A/T
KV31102100 Torque converter one-way clutch check tool	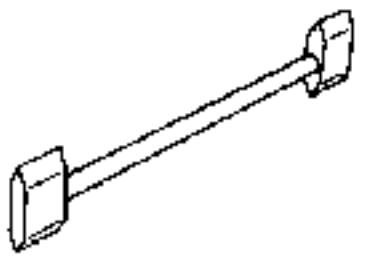	Checking one-way clutch in torque converter
ST25850000 Sliding hammer		Removing oil pump assembly
KV31102400 Clutch spring compressor	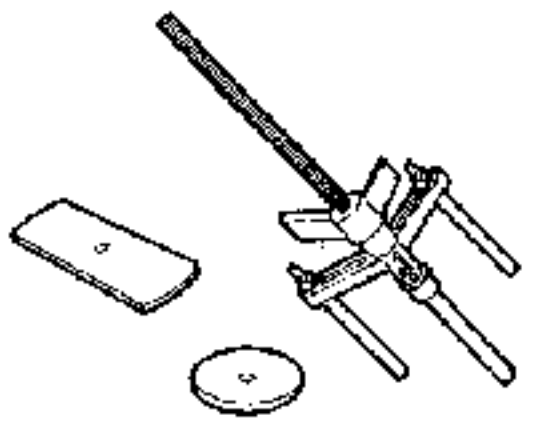	Removing and installing clutch return springs
ST33200000 Drift	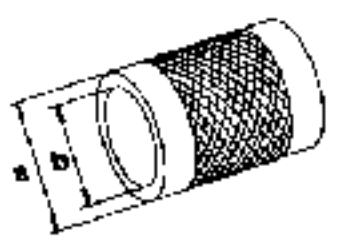	Installing oil pump housing oil seal Installing rear oil seal (RE4R01A) **a: 60 mm (2.36 in) dia.** **b: 44.5 mm (1.752 in) dia.**

Tool number Tool name	Description	
ST30720000 Drift	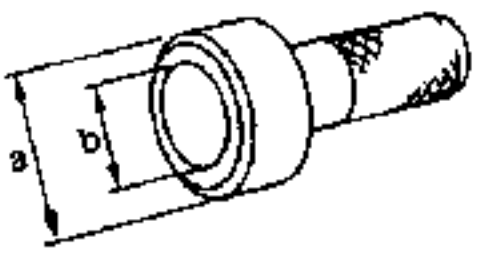	Installing rear oil seal (RE4R03A) **a: 77 mm (3.03 in) dia.** **b: 55.5 mm (2.185 in) dia.**

Service Notice

- Before proceeding with disassembly, thoroughly clean the outside of the transmission. It is important to prevent the internal parts from becoming contaminated by dirt or other foreign matter.
- Disassembly should be done in a clean work area.
- Use lint-free cloth or towels for wiping parts clean. Common shop rags can leave fibers that could interfere with the operation of the transmission.
- When disassembling parts, place them in order in a parts rack so that they can be put back into the unit in their proper positions.
- All parts should be carefully cleaned with a general purpose, non-flammable solvent before inspection or reassembly.
- Gaskets, seals and O-rings should be replaced any time the transmission is disassembled.
- It is very important to perform functional tests whenever they are indicated.
- The valve body contains precision parts and requires extreme care when parts are removed and serviced. Place removed parts in order on a parts rack so they can be put back in the valve body in the same positions and sequences. Care will also prevent springs and small parts from becoming scattered or lost.
- Properly installed valves, sleeves, plugs, etc. will slide along their bores in the valve body under their own weight.
- Before assembly, apply a coat of recommended A.T.F. to all parts. Petroleum jelly may be applied to O-rings and seals and used to hold small bearings and washers in place during reassembly. Do not use grease.
- Extreme care should be taken to avoid damage to O-rings, seals and gaskets when assembling.
- After overhaul, refill the transmission with new A.T.F.

Hydraulic Control Circuits

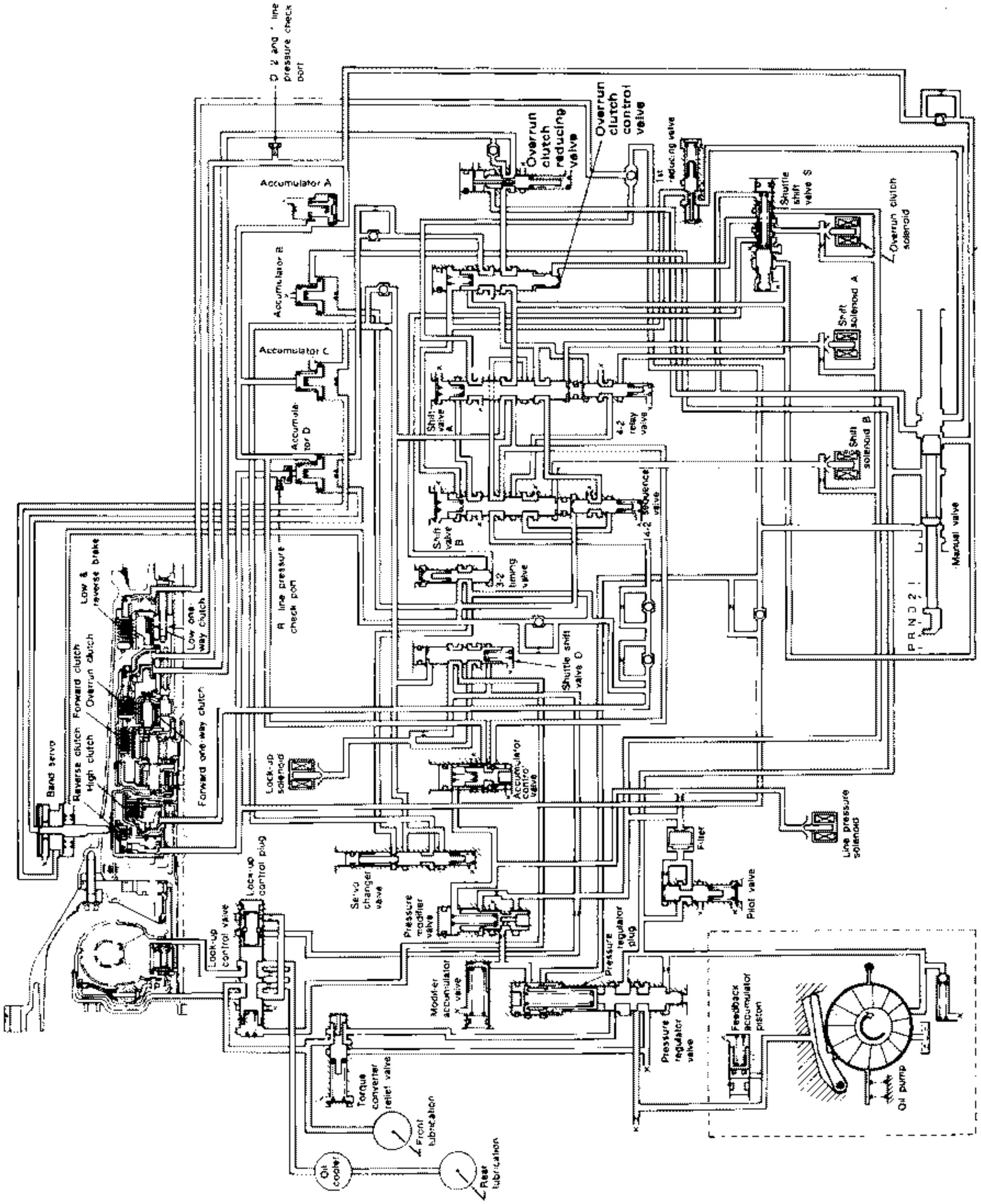

SAT123B

Electrical Control Chart

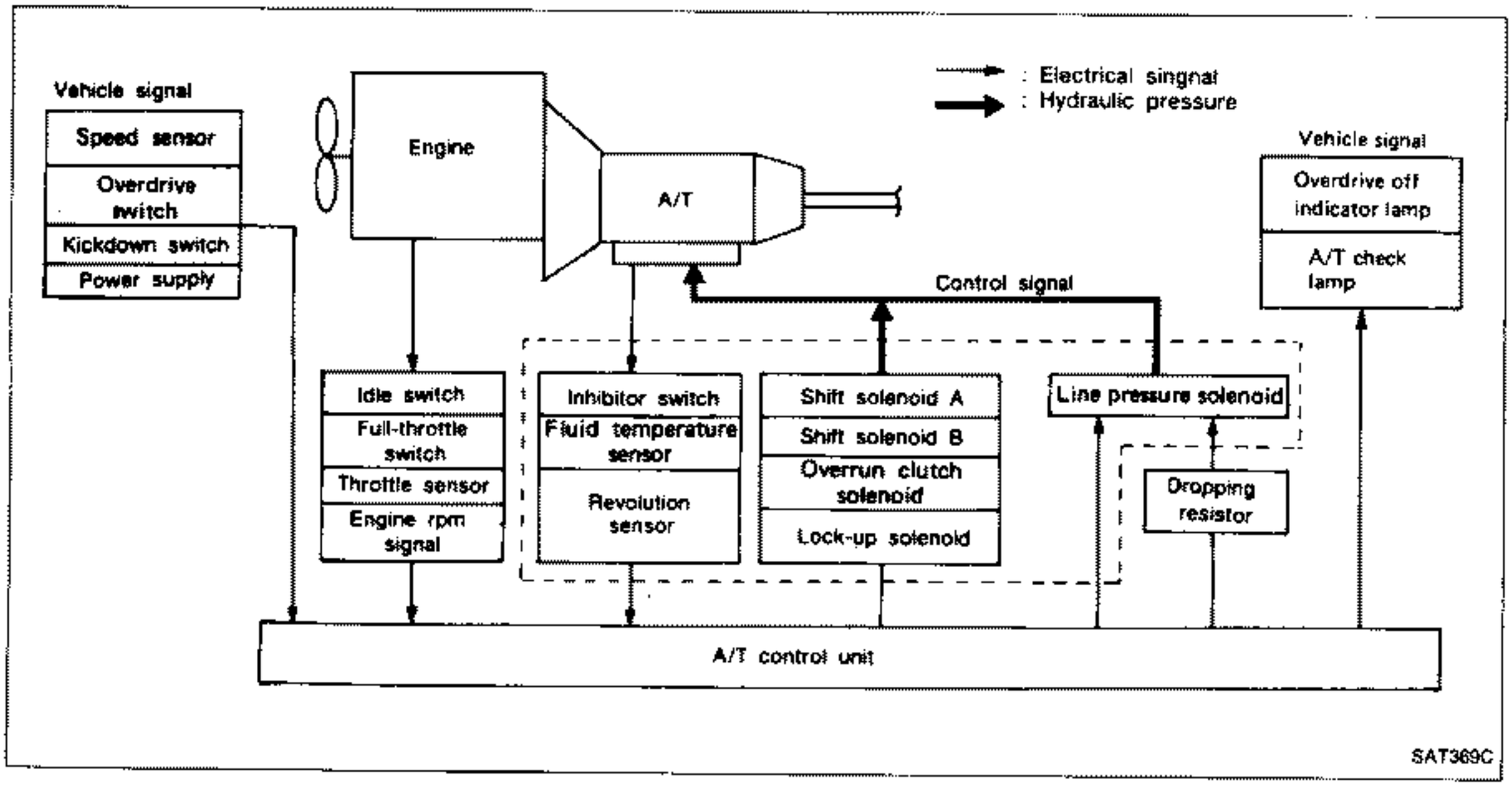

Mechanical Operation

Shift position		Re-verse clutch	High clutch	For-ward clutch	Overrun clutch	Band servo			For-ward one-way clutch	Low one-way clutch	Low & reverse brake	Lock-up	Remarks
						2nd apply	3rd release	4th apply					
P													PARK
R		○									○		REVERSE
N													NEUTRAL
D *4	1st			○	⊗				●	●			Automatic shift 1 ↔ 2 ↔ 3 ↔ 4
	2nd			○	*1 O	○			●				
	3rd		○	○	O	*2 ⊗	⊗		●				
	4th		○	⊗		*3 ⊗	⊗	○				○	
2	1st			○	⊗				●	●			Automatic shift 1 ↔ 2
	2nd			○	O	○			●				
1	1st			○	○				●		○		Locks (held stationary) in 1st speed 1 ← 2
	2nd			○	○	○			●				

*1. Operates when overdrive switch is set to "OFF".
*2. Oil pressure is applied to both 2nd "apply" side and 3rd "release" side of band servo piston. However, because oil pressure area on the "release" side is greater than that on the "apply" side, brake band does not contract.
*3. Oil pressure is applied to 4th "apply" side in condition *2 above, and brake band contracts.
*4. A/T will not shift to 4th when overdrive switch is set to "OFF" position.
○ : Operates.
O : Operates when throttle opening is less than 1/16. Engine brake activates.
● : Operates during "progressive" acceleration.
⊗ : Operates but does not affect power transmission.
⊛ : Operates when throttle opening is less than 1/16 but does not affect engine brake.

Cross-Sectional View

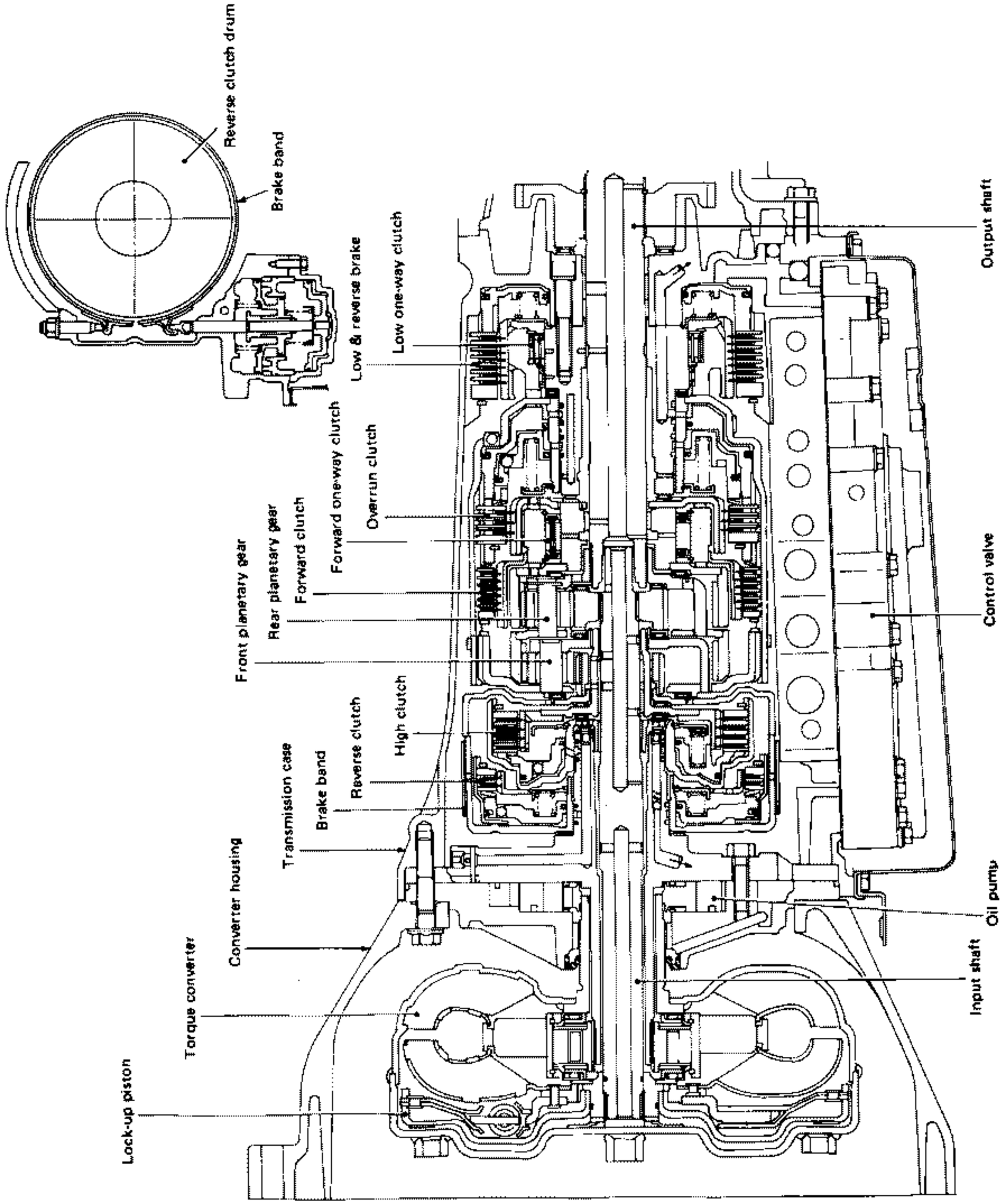

SAT125B

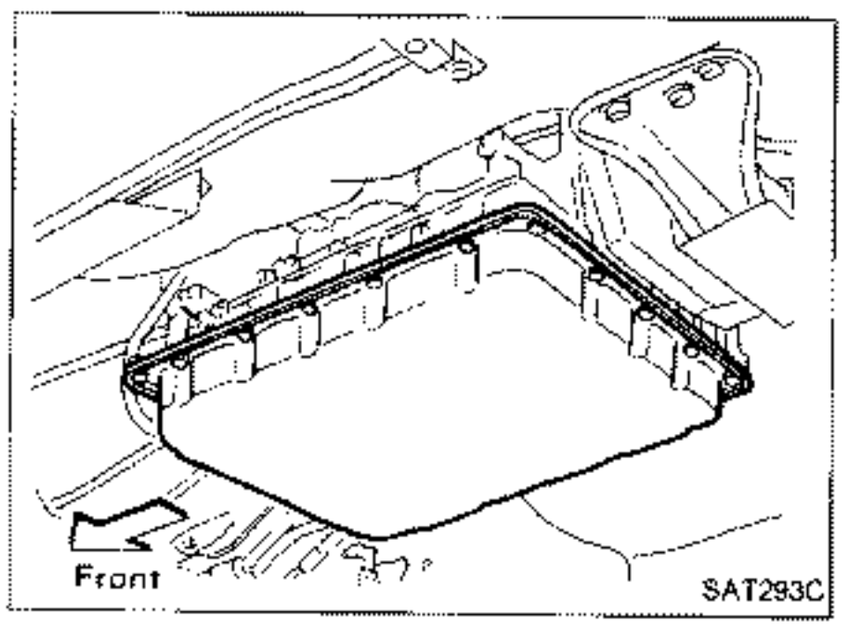

Control Valve Assembly and Accumulators Inspection

1. Remove oil pan and gasket and drain A.T.F.

2. Remove oil strainer.

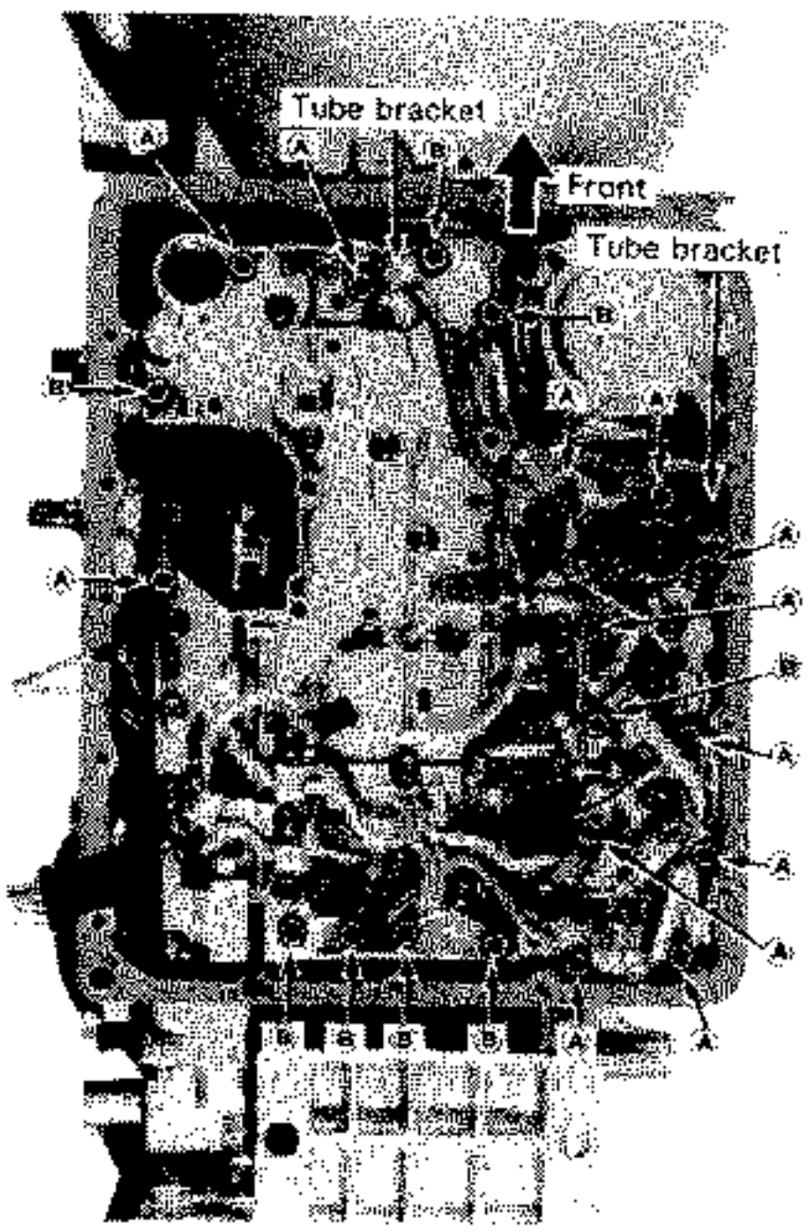

3. Remove control valve assembly by removing fixing bolts and disconnecting harness connector.

Bolt length and location

Bolt symbol	ℓ mm (in)
Ⓐ	33 (1.30)
Ⓑ	45 (1.77)

4. Remove solenoids and valves from valve body if necessary.
5. Remove terminal cord assembly if necessary.

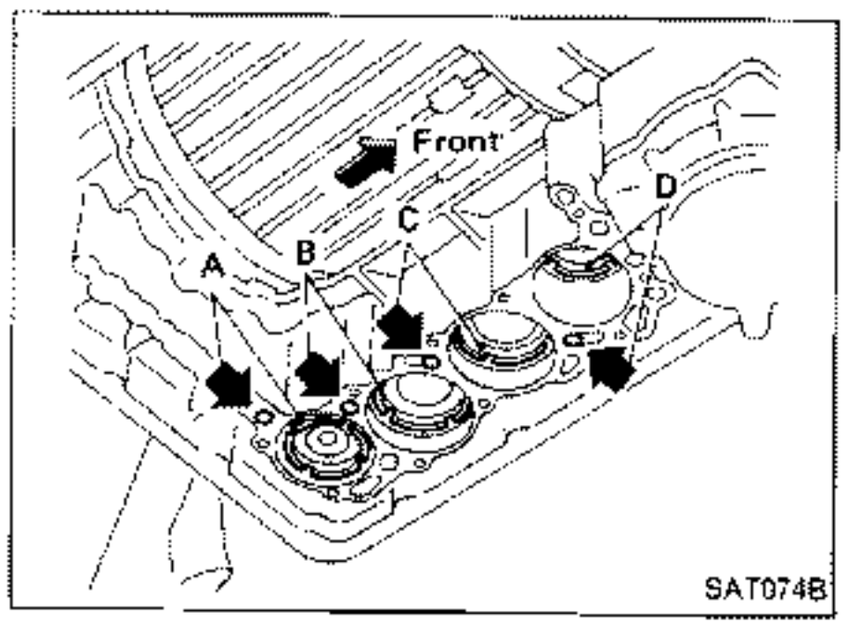

6. Remove accumulators A, B, C and D by applying compressed air if necessary.
- **Hold each piston with rag.**
7. Reinstall any part removed.
- **Always use new sealing parts.**

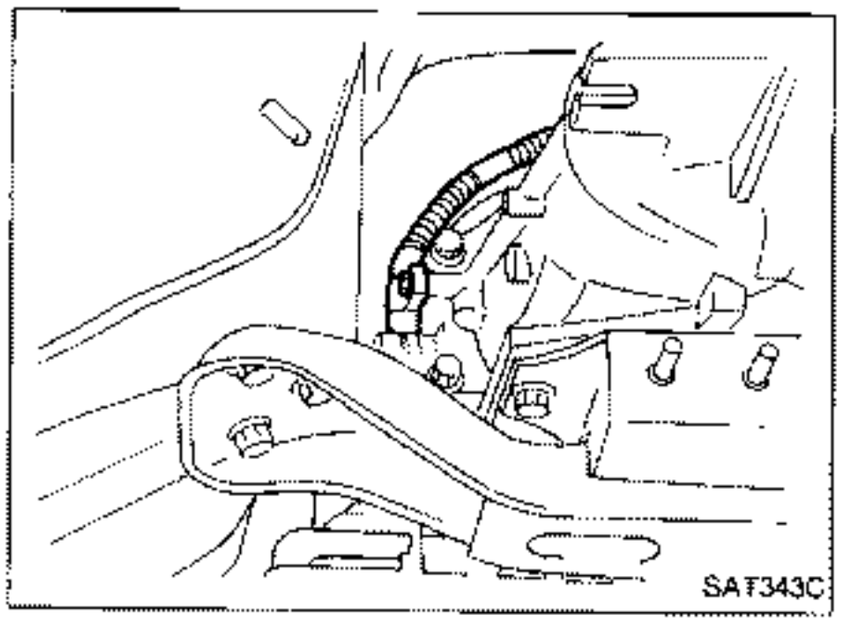

Revolution Sensor Replacement

1. Remove exhaust tube.
2. Remove revolution sensor from A/T assembly.
3. Reinstall any part removed.

- **Always use new sealing parts.**

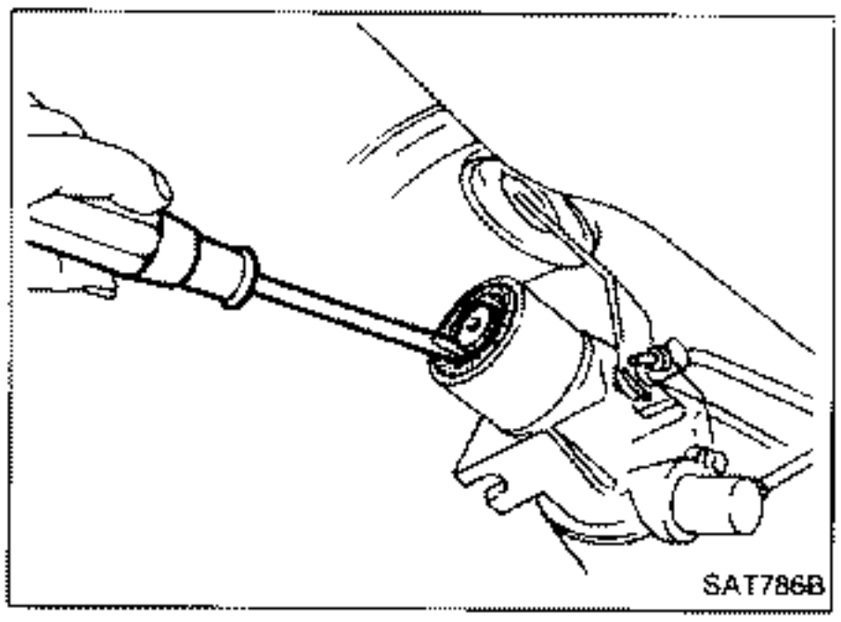

Rear Oil Seal Replacement

1. Remove propeller shaft from vehicle. — Refer to section PD.
2. Remove rear oil seal.

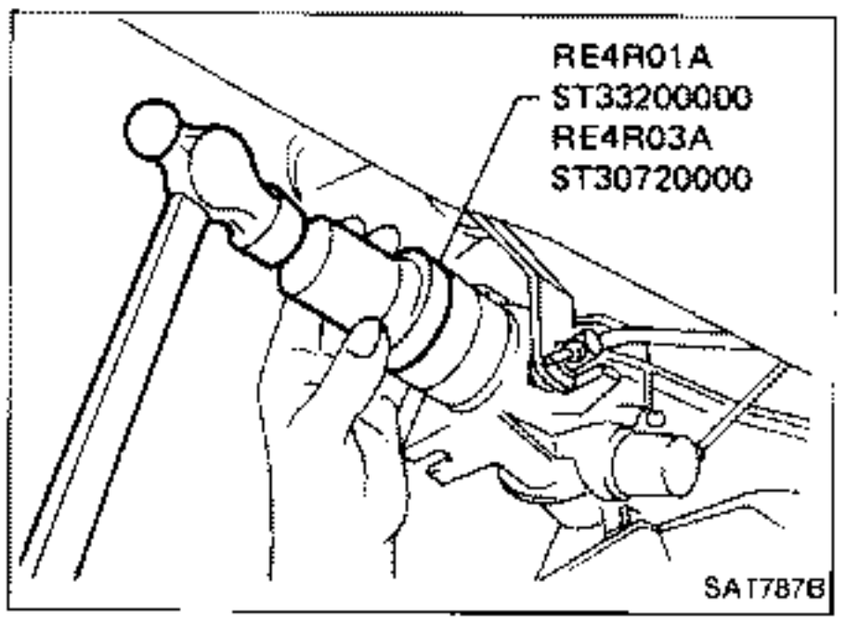

3. Install rear oil seal.

- **Apply A.T.F. before installing.**

4. Reinstall any part removed.

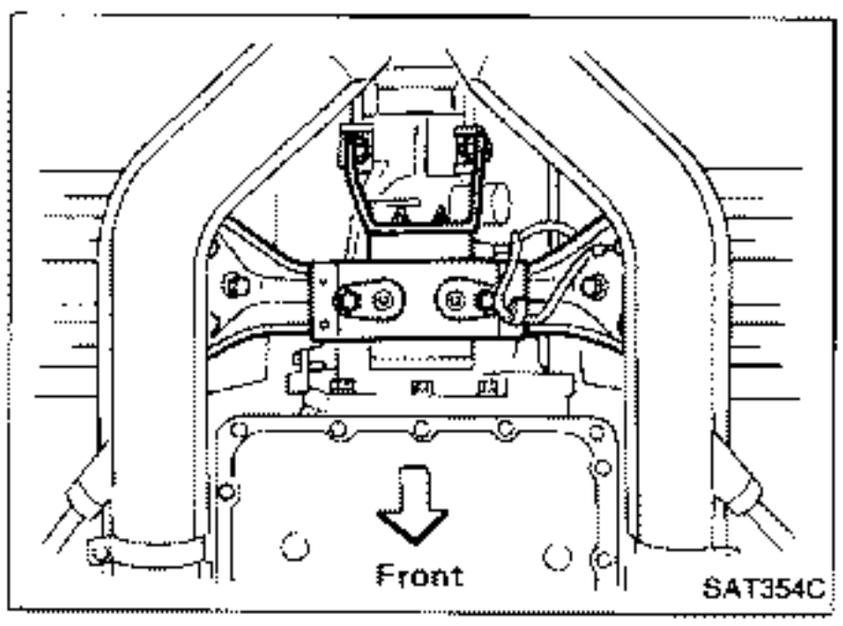

Parking Components Inspection

1. Remove exhaust tube.
2. Remove propeller shaft from vehicle. — Refer to section PD.
3. Remove rear engine mounting member from A/T assembly while supporting A/T with jack.

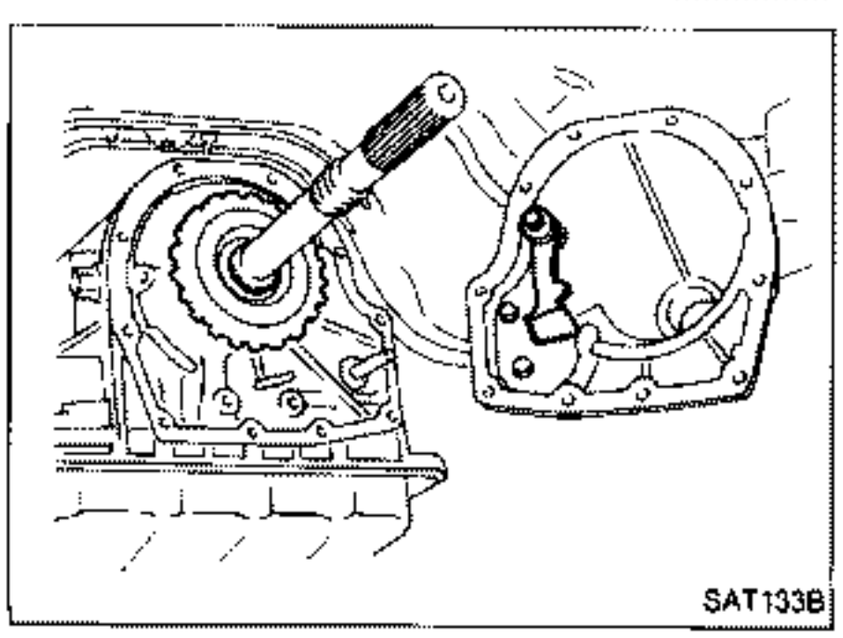

4. Remove rear extension from transmission case.
5. Replace parking components if necessary.
6. Reinstall any part removed.

- **Always use new sealing parts.**

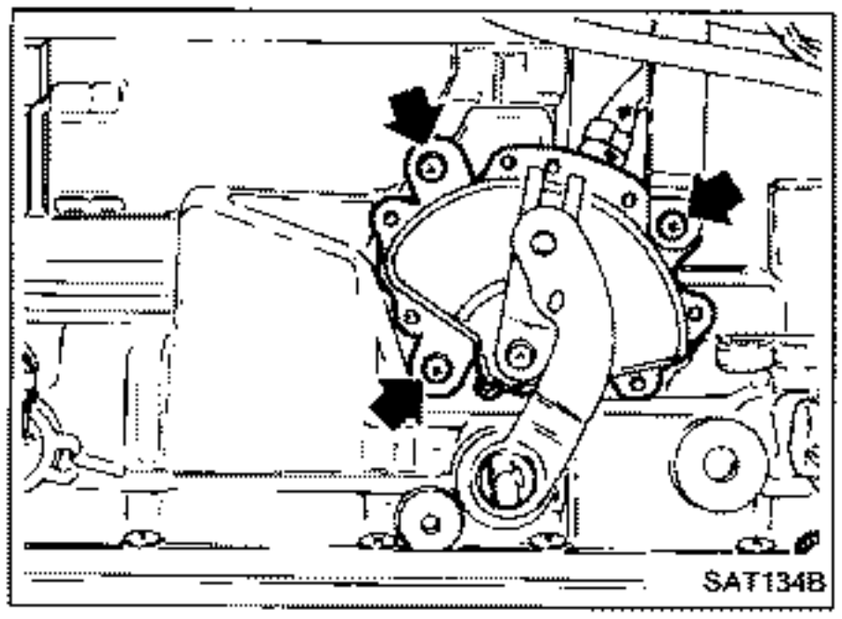
SAT134B

Inhibitor Switch Adjustment

1. Remove manual control linkage from manual shaft of A/T assembly.
2. Set manual shaft of A/T assembly in "N" position.
3. Loosen inhibitor switch fixing bolts.

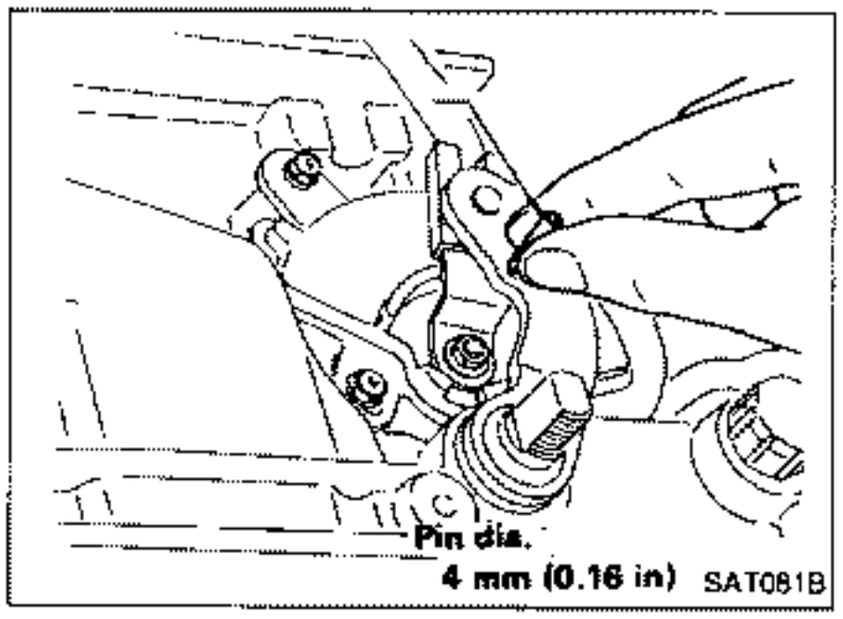

SAT081B

4. Insert pin into adjustment holes in both inhibitor switch and manual shaft of A/T assembly as near vertical as possible.
5. Reinstall any part removed.
6. Check continuity of inhibitor switch. — Refer to "Electrical Components Inspection".

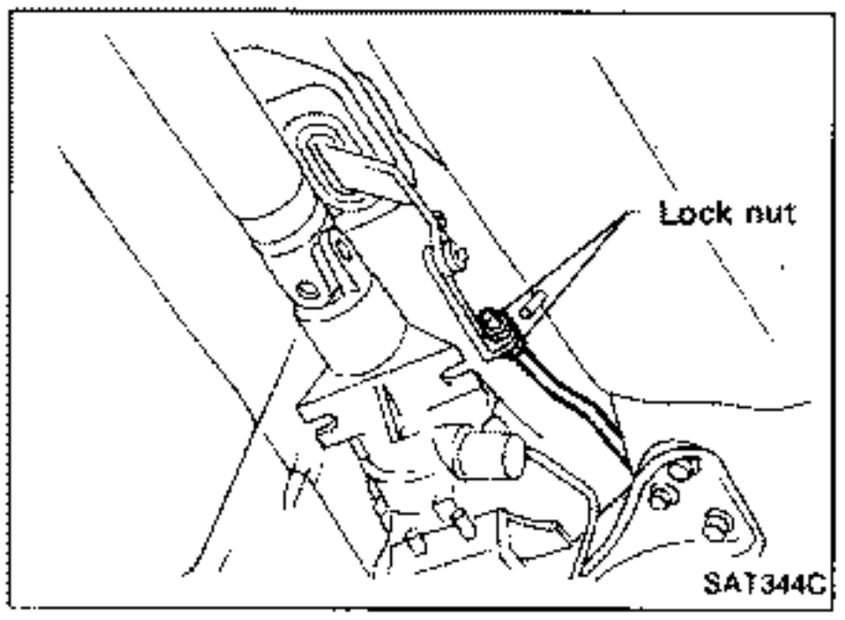

SAT344C

Manual Control Linkage Adjustment

Move selector lever from "P" range to "1" range. You should be able to feel the detents in each range. If the detents cannot be felt or the pointer indicating the range is improperly aligned, the linkage needs adjustment.

1. Place selector lever in "P" range.
2. Loosen lock nuts.

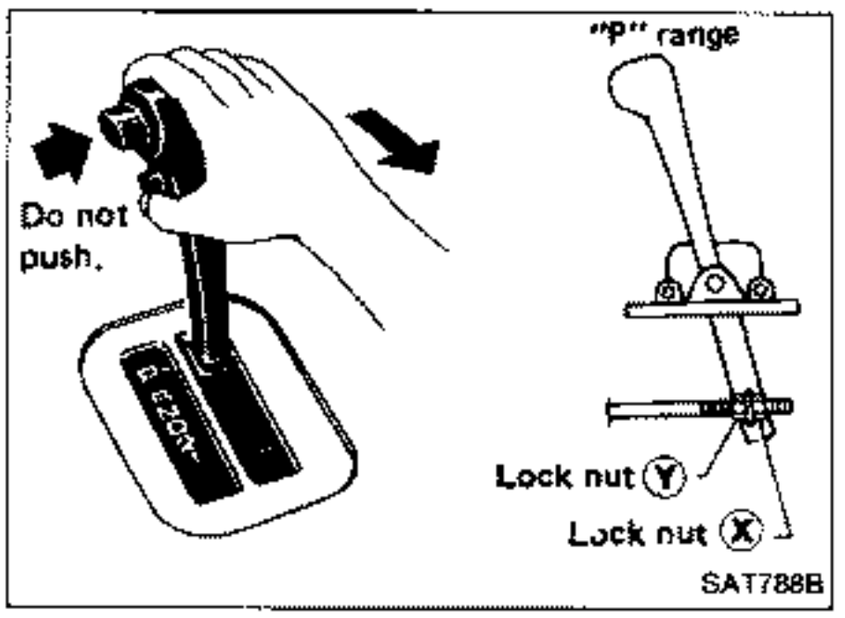

SAT788B

3. Tighten lock nut Ⓧ until it touches trunnion pulling selector lever toward "R" range side without pushing button.
4. Back off lock nut Ⓧ 1 turn and tighten lock nut Ⓨ to the specified torque.
   Lock nut:
   : 11 - 15 N·m (1.1 - 1.5 kg-m, 8 - 11 ft-lb)
5. Move selector lever from "P" range to "1" range. Make sure that selector lever can move smoothly.

NOTE

Contents

How to Perform Trouble Diagnoses for Quick and Accurate Repair ..... AT- 14
Preliminary Check ..... AT- 15
Diagnosis by CONSULT ..... AT- 33
A/T Electrical Parts Location ..... AT- 36
Circuit Diagram for Quick Pinpoint Check ..... AT- 39
Wiring Diagram ..... AT- 40
Self-diagnosis ..... AT- 44
SELF-DIAGNOSTIC PROCEDURE (With CONSULT) ..... AT- 44
SELF-DIAGNOSTIC PROCEDURE (Without CONSULT) ..... AT- 45
JUDGMENT OF SELF-DIAGNOSIS CODE ..... AT- 47
REVOLUTION SENSOR CIRCUIT CHECK ..... AT- 51
SPEED SENSOR CIRCUIT CHECK ..... AT- 52
THROTTLE SENSOR CIRCUIT CHECK ..... AT- 53
SHIFT SOLENOID A CIRCUIT CHECK ..... AT- 54
SHIFT SOLENOID B CIRCUIT CHECK ..... AT- 55
OVERRUN CLUTCH SOLENOID CIRCUIT CHECK ..... AT- 56
LOCK-UP SOLENOID CIRCUIT CHECK ..... AT- 57
FLUID TEMPERATURE SENSOR CIRCUIT AND
A/T CONTROL UNIT POWER SOURCE CIRCUIT CHECKS ..... AT- 58
ENGINE REVOLUTION SIGNAL CIRCUIT CHECK ..... AT- 60
LINE PRESSURE SOLENOID CIRCUIT CHECK ..... AT- 61
INHIBITOR, OVERDRIVE, KICKDOWN AND IDLE SWITCH CIRCUIT CHECKS ..... AT- 62
Diagnostic Procedure 1
(SYMPTOM: A/T CHECK lamp does not come on for about 2 seconds
when turning ignition switch to "ON".) ..... AT- 66
Diagnostic Procedure 2
(SYMPTOM: Engine cannot be started with selector lever in "P" or "N" range
or engine can be started with selector lever in "D", "2", "1" or "R" range.) ..... AT- 67
Diagnostic Procedure 3
(SYMPTOM: Vehicle moves when it is pushed forward or backward with selector
lever in "P" range.) ..... AT- 67
Diagnostic Procedure 4
(SYMPTOM: Vehicle moves forward or backward when selecting "N" range.) ..... AT- 68
Diagnostic Procedure 5
(SYMPTOM: There is large shock when changing from "N" to "R" range.) ..... AT- 69
Diagnostic Procedure 6
(SYMPTOM: Vehicle does not creep backward when selecting "R" range.) ..... AT- 70
Diagnostic Procedure 7
(SYMPTOM: Vehicle does not creep forward when selecting "D" , "2" or "1" range.) ..... AT- 71
Diagnostic Procedure 8
(SYMPTOM: Vehicle cannot be started from D_1 on Cruise test — Part 1.) ..... AT- 72
Diagnostic Procedure 9
(SYMPTOM: A/T does not shift from D_1 to D_2 at the specified speed. A/T does not shift
from D_4 to D_2 when depressing accelerator pedal fully at the specified speed.) ..... AT- 73
Diagnostic Procedure 10
(SYMPTOM: A/T does not shift from D_2 to D_3 at the specified speed.) ..... AT- 74
Diagnostic Procedure 11
(SYMPTOM: A/T does not shift from D_3 to D_4 at the specified speed.) ..... AT- 75
Diagnostic Procedure 12
(SYMPTOM: A/T does not perform lock-up at the specified speed.) ..... AT- 76

Contents (Cont'd)

Diagnostic Procedure 13
(SYMPTOM: A/T does not hold lock-up condition for more than 30 seconds.) ..... AT- 77
Diagnostic Procedure 14
(SYMPTOM: Lock-up is not released when accelerator pedal is released.) ..... AT- 77
Diagnostic Procedure 15
(SYMPTOM: Engine speed does not return to idle smoothly when A/T is shifted from D_4 to D_3 with accelerator pedal released.
Vehicle does not decelerate by engine brake when changing overdrive switch to "OFF" position with accelerator pedal released.
Vehicle does not decelerate by engine brake when changing selector lever from "D" to "2" range with accelerator pedal released.) ..... AT- 78
Diagnostic Procedure 16
(SYMPTOM: Vehicle does not start from D_1 on Cruise test — Part 2.) ..... AT- 79
Diagnostic Procedure 17
(SYMPTOM: A/T does not shift from D_4 on D_3 when changing overdrive switch to "OFF" position.) ..... AT- 79
Diagnostic Procedure 18
(SYMPTOM: A/T does not shift from D_3 on 2_2 when changing selector lever from "D" to "2" range.) ..... AT- 80
Diagnostic Procedure 19
(SYMPTOM: A/T does not shift from 2_2 to 1_1 when changing selector lever from "2" to "1" range.) ..... AT- 80
Diagnostic Procedure 20
(SYMPTOM: Vehicle does not decelerate by engine brake when shifting from 2_2 (1_2) to 1_1.) ..... AT- 80
Electrical Components Inspection ..... AT- 81
Final Check ..... AT- 88
Symptom Chart ..... AT- 93

How to Perform Trouble Diagnoses for Quick and Accurate Repair

WORK FLOW

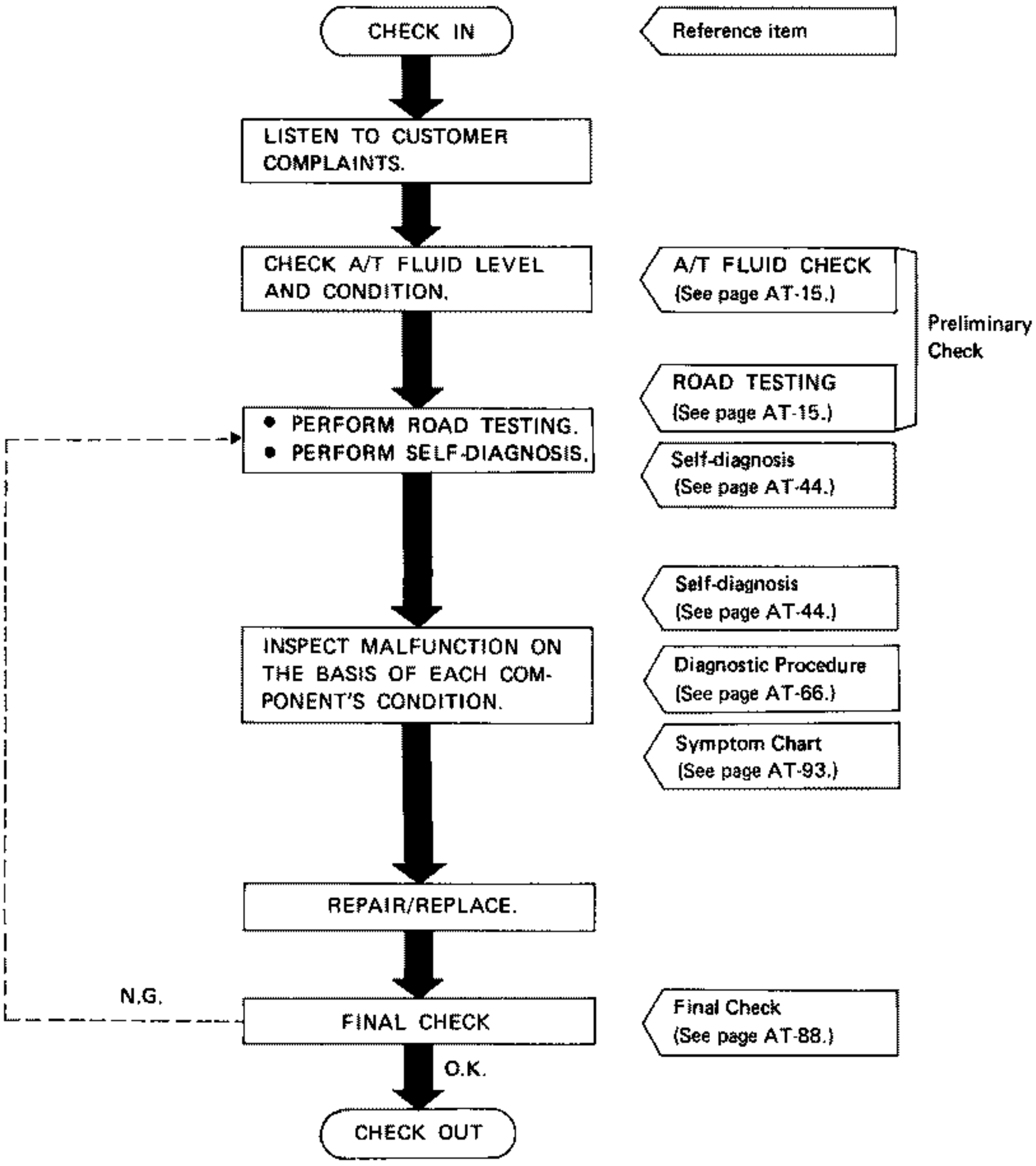

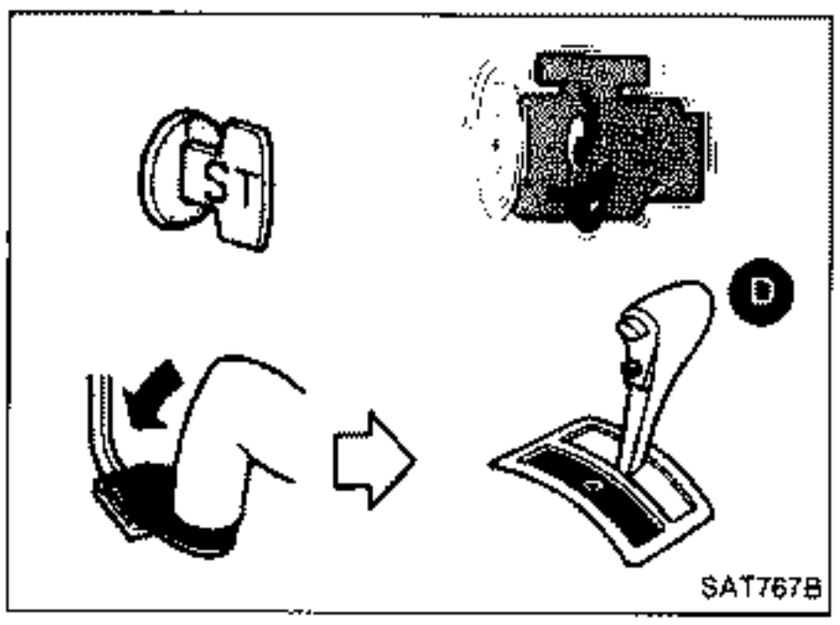

Preliminary Check

A/T FLUID CHECK

Fluid leakage check

1. Clean area suspected of leaking, — for example, mating surface of converter housing and transmission case.
2. Start engine, apply foot brake, place selector lever in "D" range and wait a few minutes.
3. Stop engine.

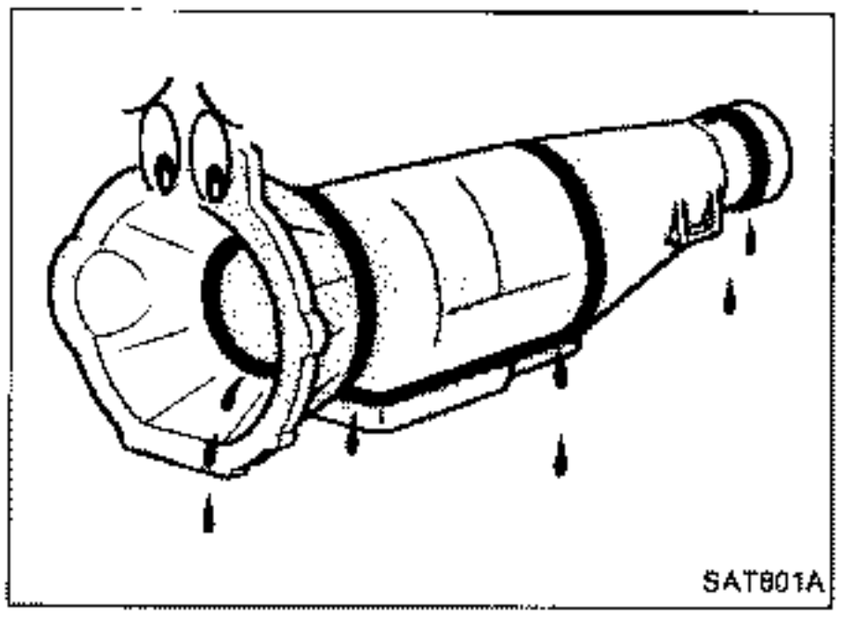

4. Check for fresh leakage.

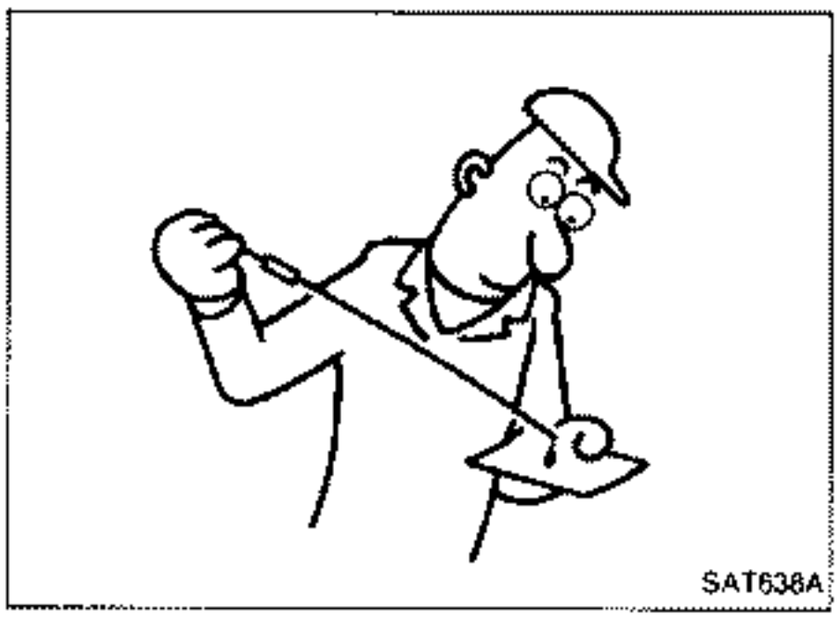

Fluid condition check

Fluid color	Suspected problem
Dark or black with burned odor	Wear of frictional material
Milky pink	Water contamination — Road water entering through filler tube or breather
Varnished fluid, light to dark brown and tacky	Oxidation — Over or under filling — Overheating

Fluid level check

Refer to section MA.

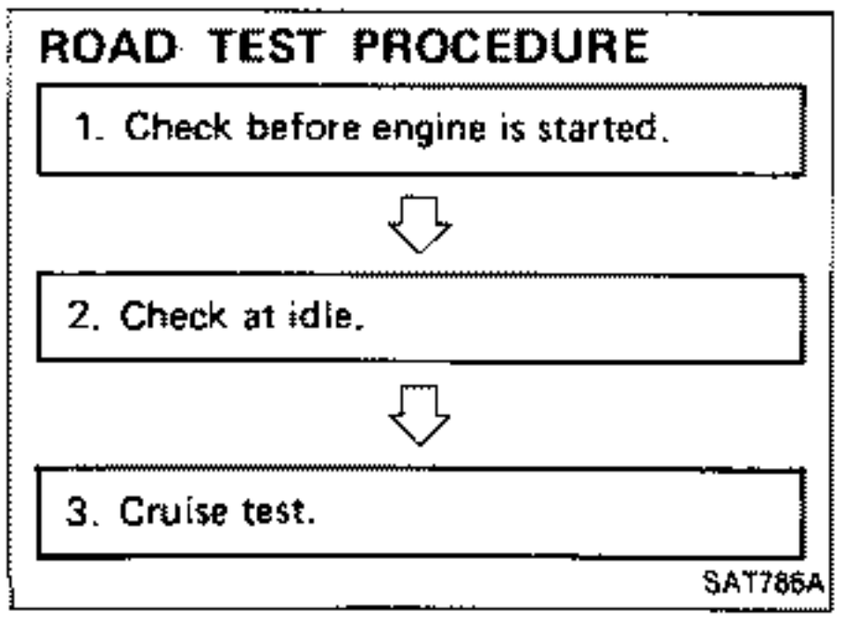

ROAD TESTING

Description

- The purpose of this road test is to determine overall performance of automatic transmission and analyze causes of problems.
- The road test consists of the following three parts:

1. Check before engine is started
2. Check at idle
3. Cruise test

Preliminary Check (Cont'd)

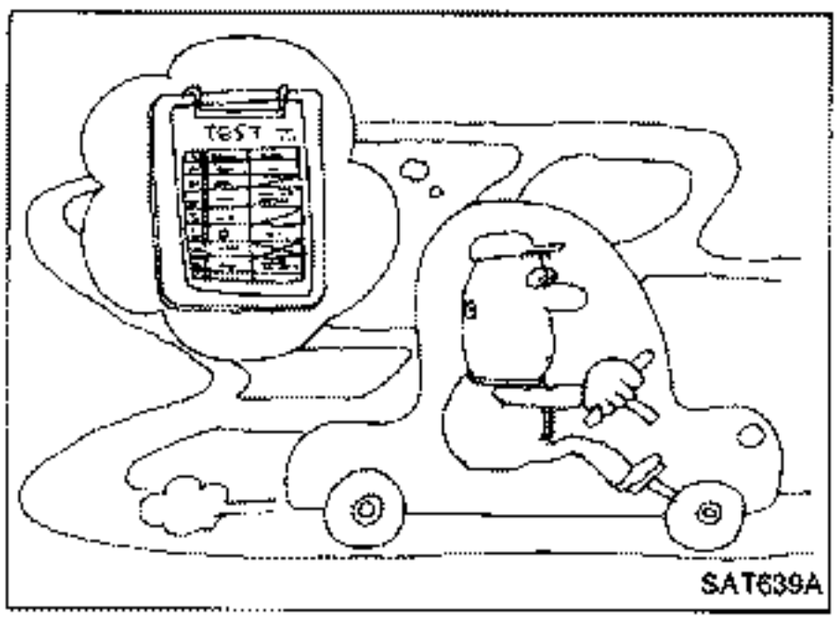

- Before road test, familiarize yourself with all test procedures and items to check.
- Conduct tests on all items. Troubleshoot items which check out No Good after road test. Refer to "Self-diagnosis" and "Diagnostic Procedure".

Preliminary Check (Cont'd)

1. Check before engine is started

1

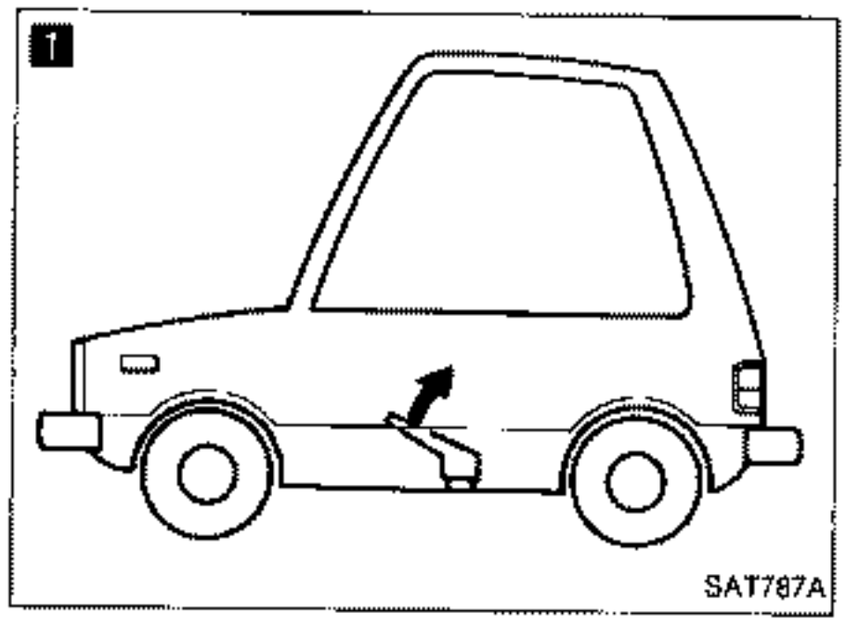

2

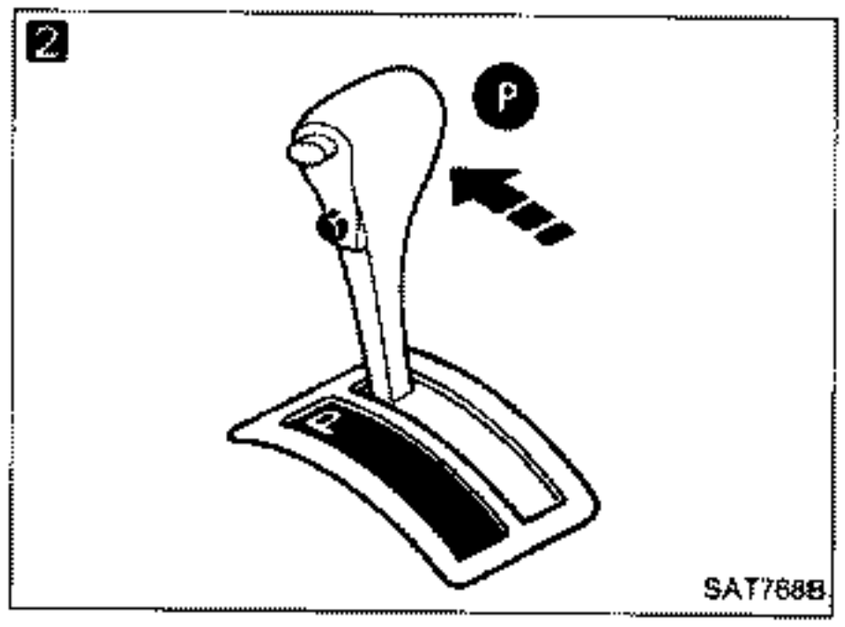

3 4 L.H.D. model

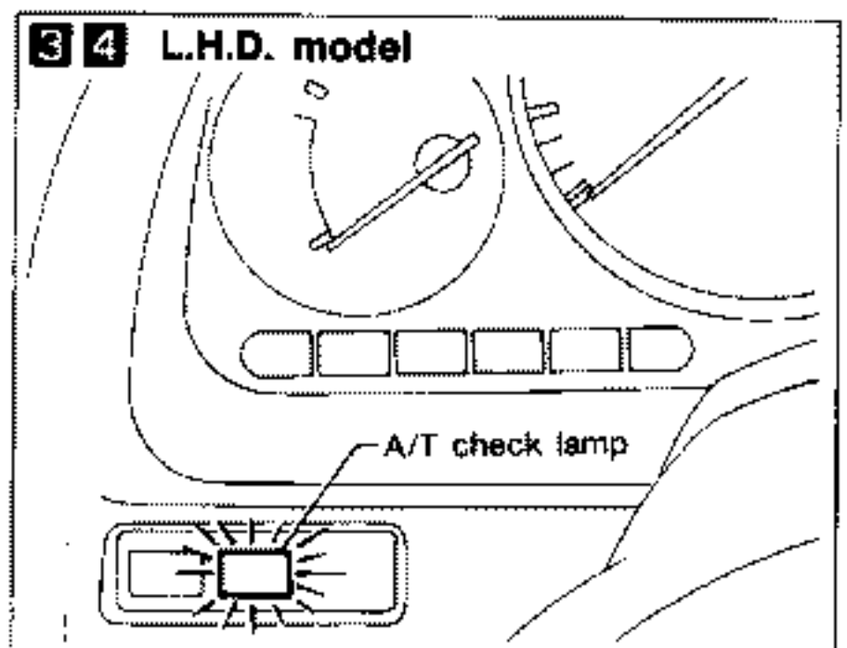

R.H.D. model

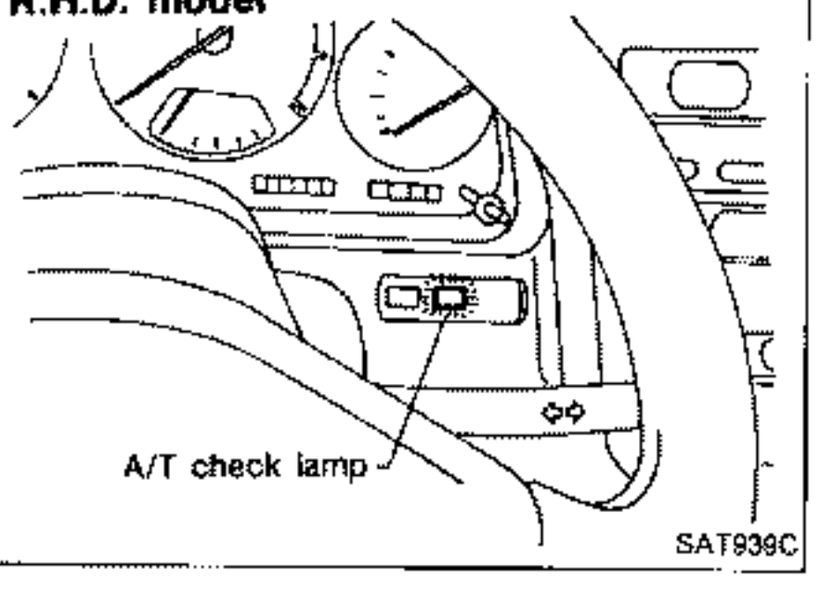

1

Park vehicle on flat surface.



2

Move selector lever to "P" range.

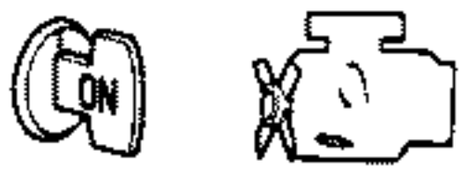

3

Does A/T check lamp come on for about 2 seconds?

No → Go to Diagnostic Procedure 1.

Yes

4

Does A/T check lamp flicker for about 8 seconds?

Yes → Perform self-diagnosis.
— Refer to SELF-DIAGNOSIS PROCEDURE.

No



Perform self-diagnosis.
— Refer to SELF-DIAGNOSIS PROCEDURE and note N.G. items.

Go to "ROAD TESTING — 2. Check at idle".

Preliminary Check (Cont'd)

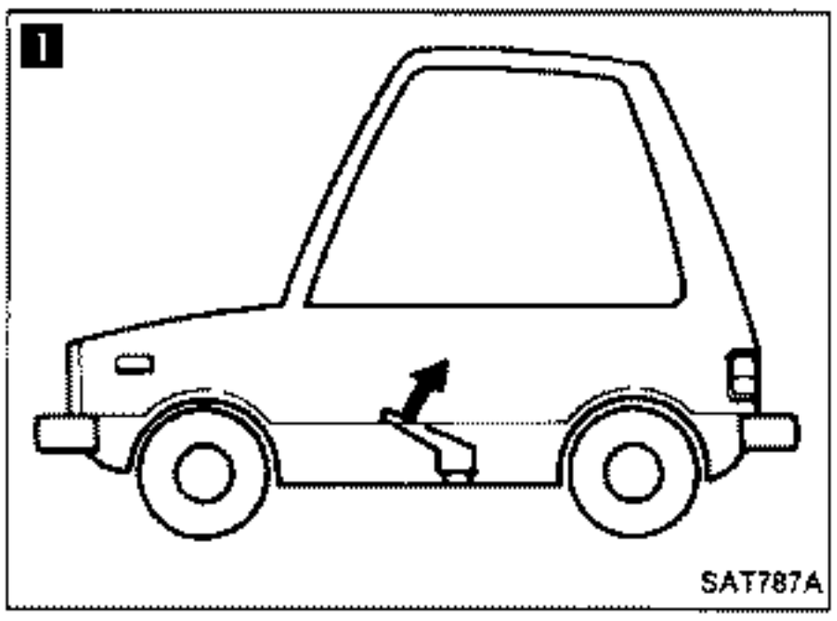

2. Check at idle

1

Park vehicle on flat surface.



2

Move selector lever to "P" or "N" range.



Is engine started? — No → Go to Diagnostic Procedure 2.

Yes



3

Move selector lever to "D", "1", "2" or "R" range.

Is engine started? — Yes → Go to Diagnostic Procedure 2.

No

4

Move selector lever to "P" range.



5

Push vehicle forward or backward.

Does vehicle move when it is pushed forward or backward? — Yes → Go to Diagnostic Procedure 3.

No

Ⓐ

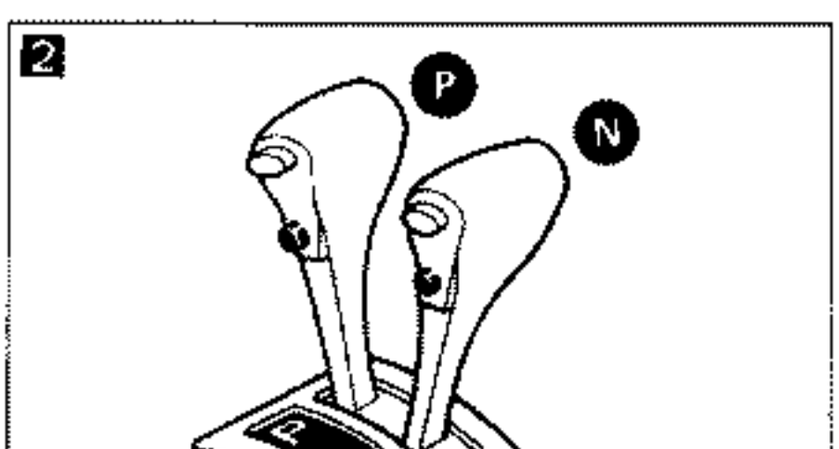

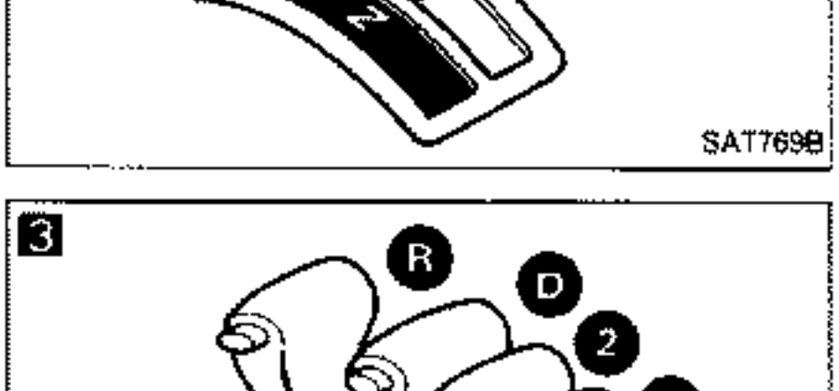

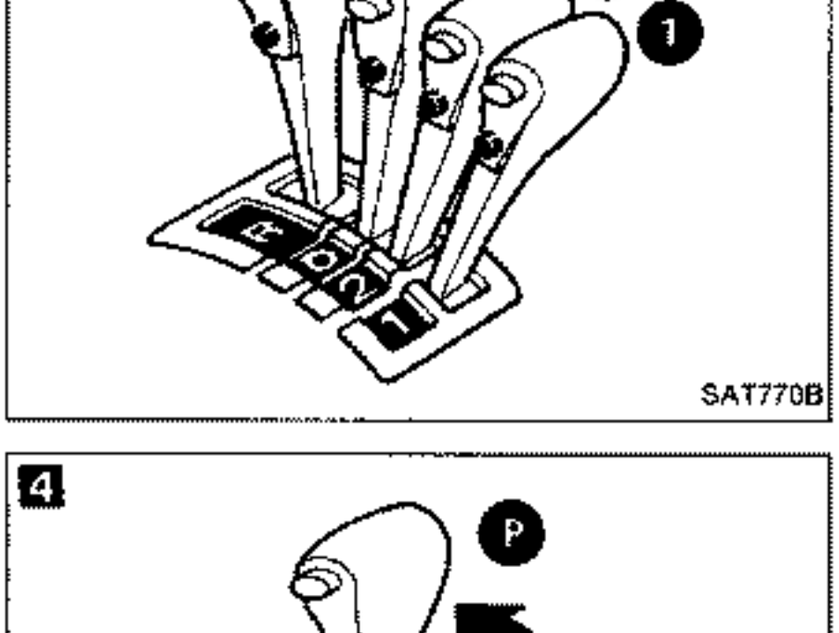

Preliminary Check (Cont'd)

6

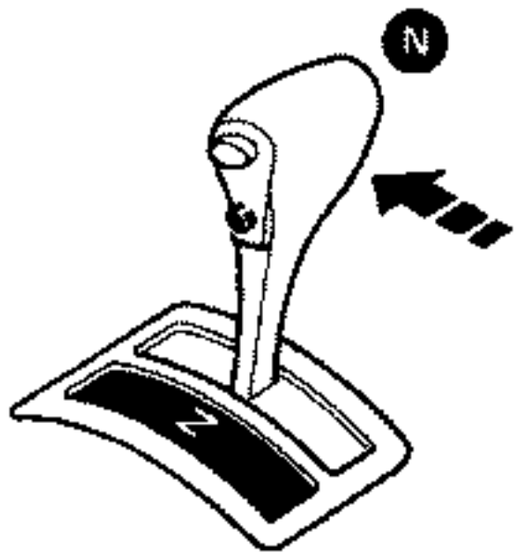

SAT771B

7

Brake pedal



SAT797A

8

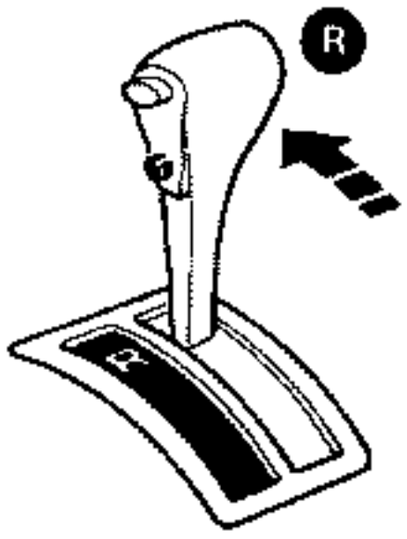

SAT772B

9

Brake pedal



For several seconds

SAT799A

10

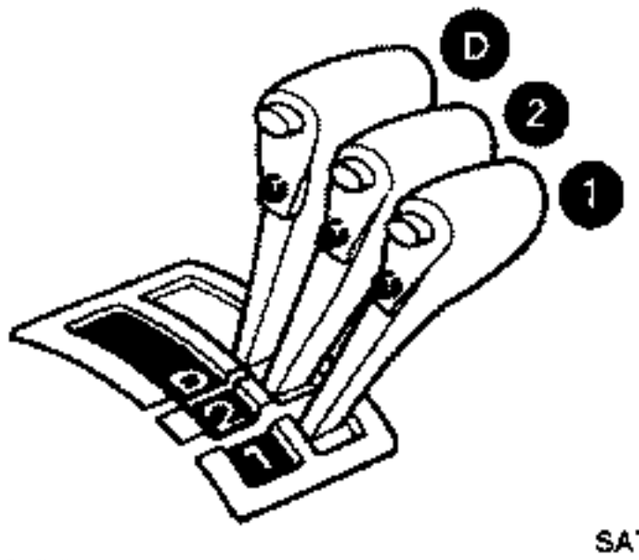

SAT773B

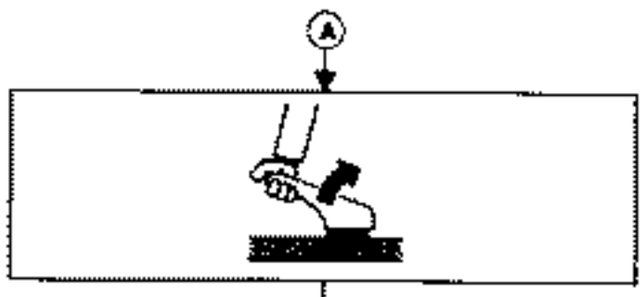

6

Move selector lever to "N" range.



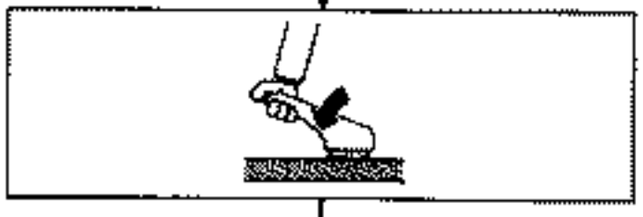

Does vehicle move forward or backward? — Yes → Go to Diagnostic Procedure 4.

No

7

Apply foot brake.

8

Move selector lever to "R" range.

Is there large shock when changing from "N" to "R" range? — Yes → Go to Diagnostic Procedure 5.

No

9

Release foot brake for several seconds.

Does vehicle creep backward when foot brake is released? — No → Go to Diagnostic Procedure 6.

Yes

10

Move selector lever to "D", "1" and "2" ranges and check if vehicle creeps forward.

Does vehicle creep forward in all three ranges? — Yes → Go to Cruise test.

No

Go to Diagnostic Procedure 7.

Preliminary Check (Cont'd)

3. Cruise test

With CONSULT

- Using CONSULT, conduct a cruise test and record the result.
- Print the result and ensure that shifts and lock-ups take place as per "Shift Schedule."
- Check all items listed in Parts 1 through 3.

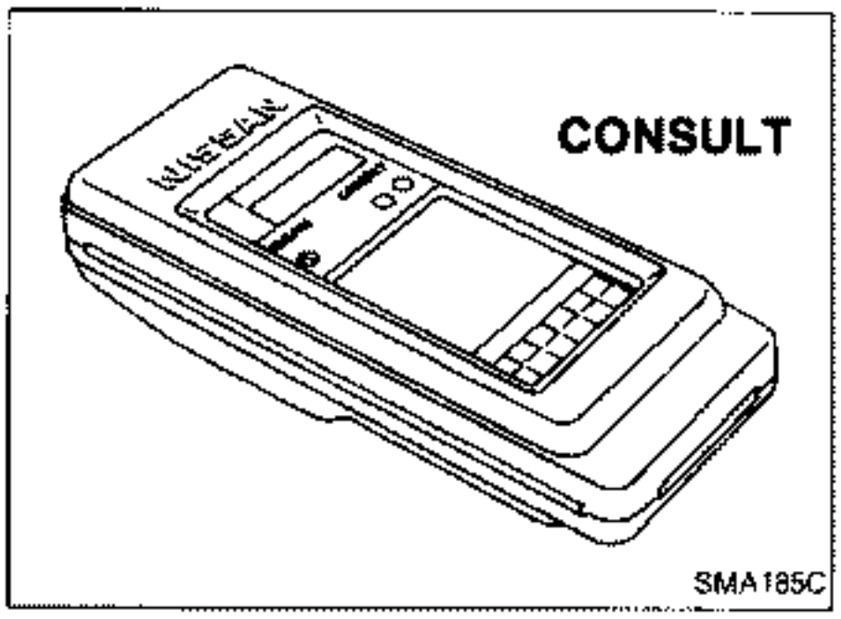

CONSULT setting procedure

1. Turn off ignition switch.
2. Connect "CONSULT" to diagnostic connector. (Diagnostic connector is located in left dash side panel.)

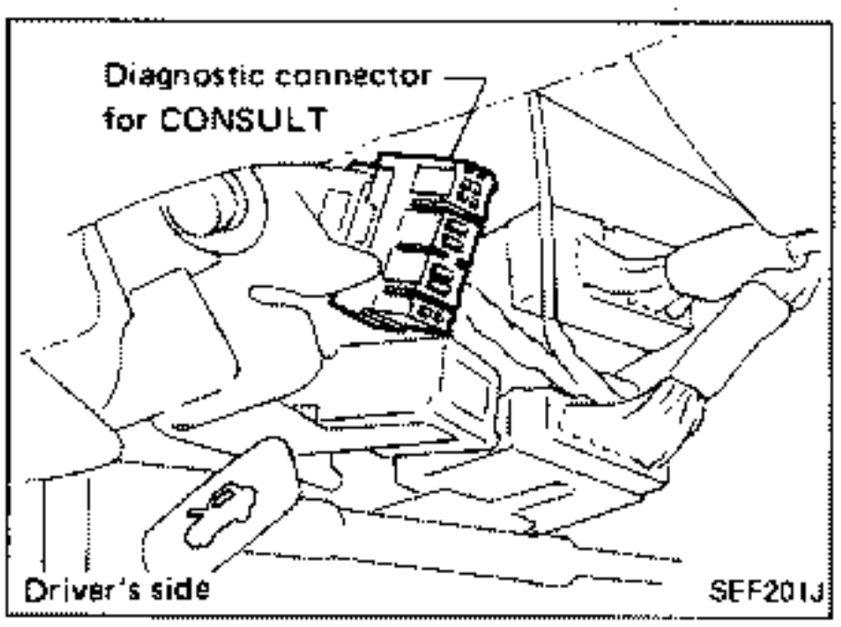

3. Turn on ignition switch.
4. Touch "START".

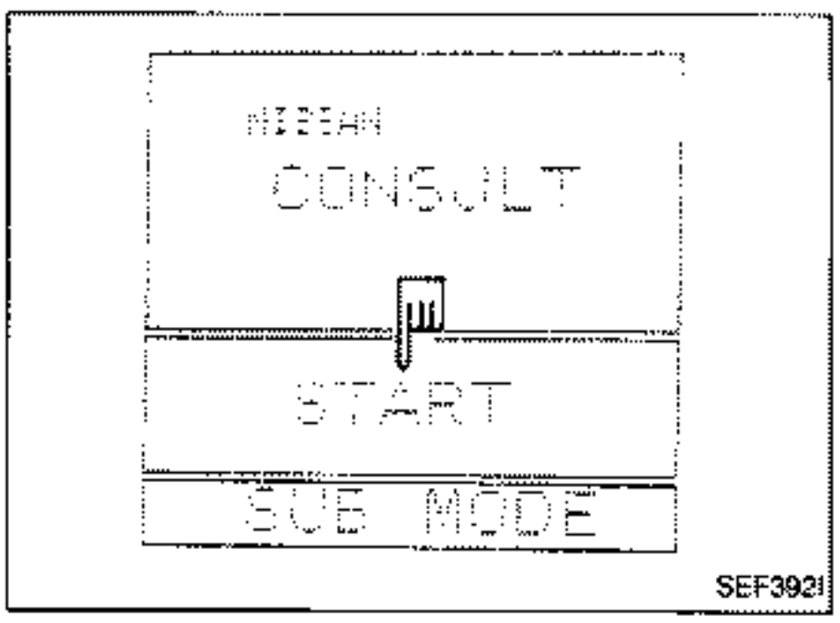

5. Touch "A/T".

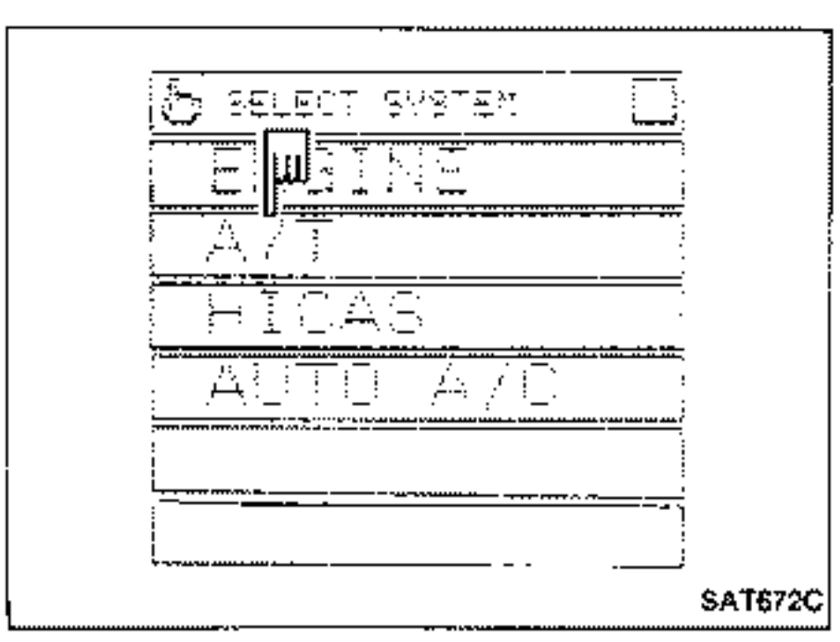

Preliminary Check (Cont'd)

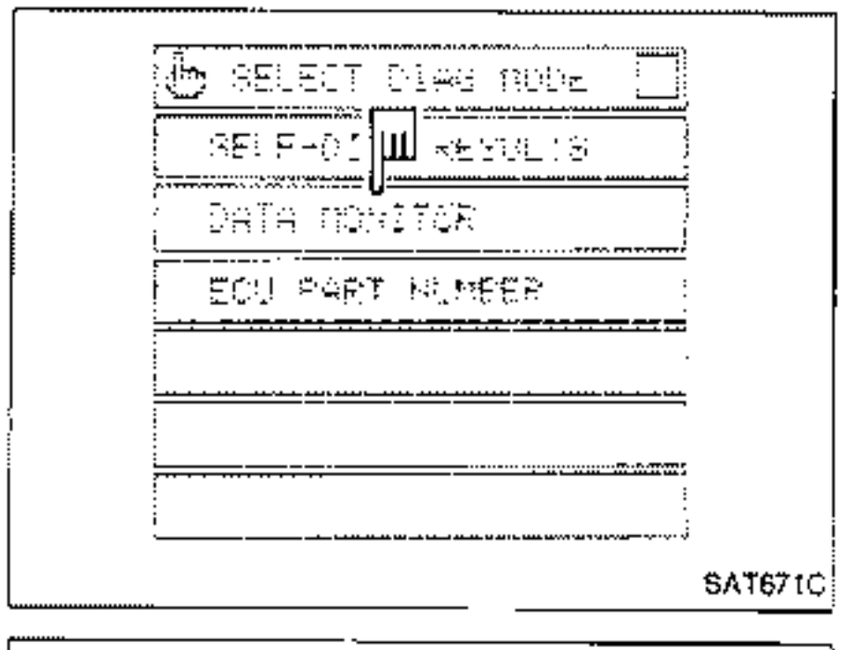

6. Touch "DATA MONITOR".

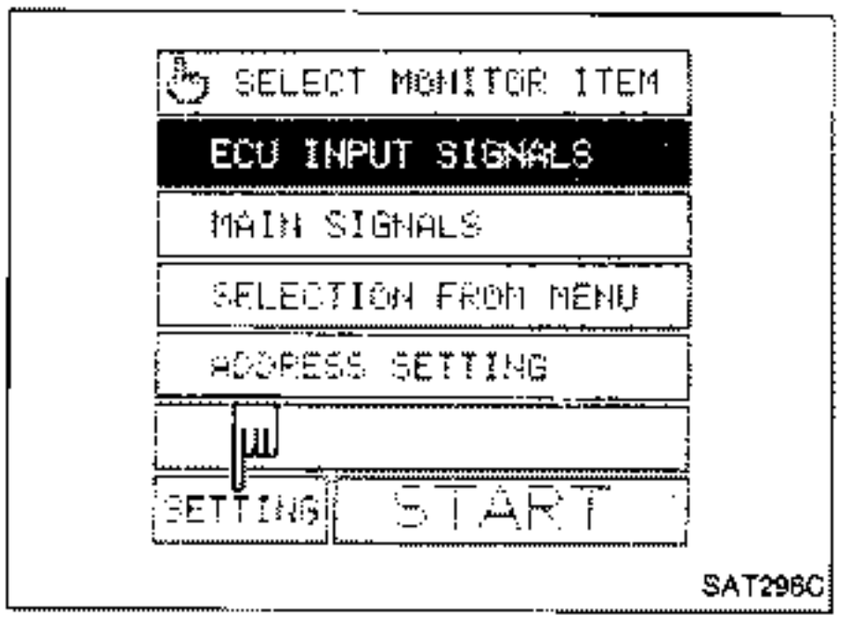

7. Touch "SETTING" to set recording condition.

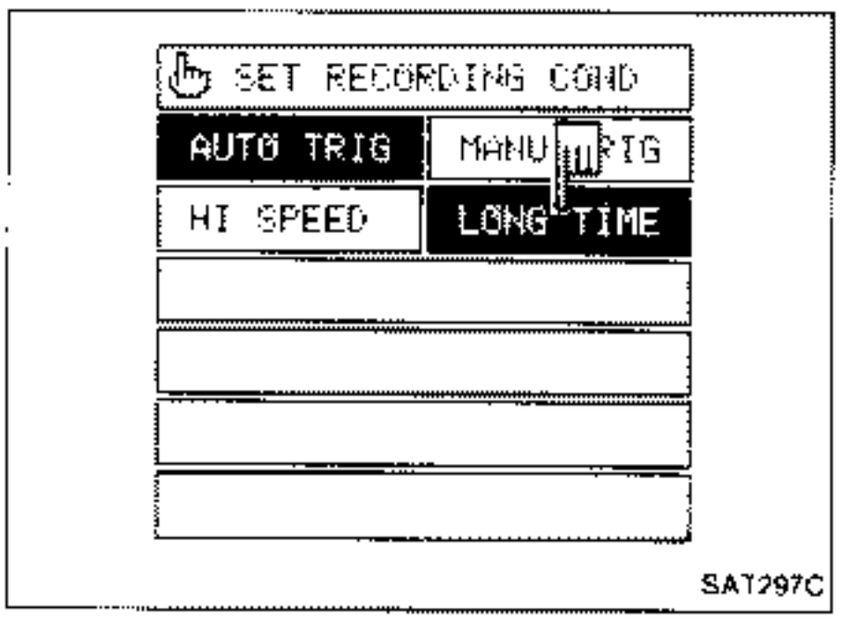

8. Touch "LONG TIME" and "ENTER" key.

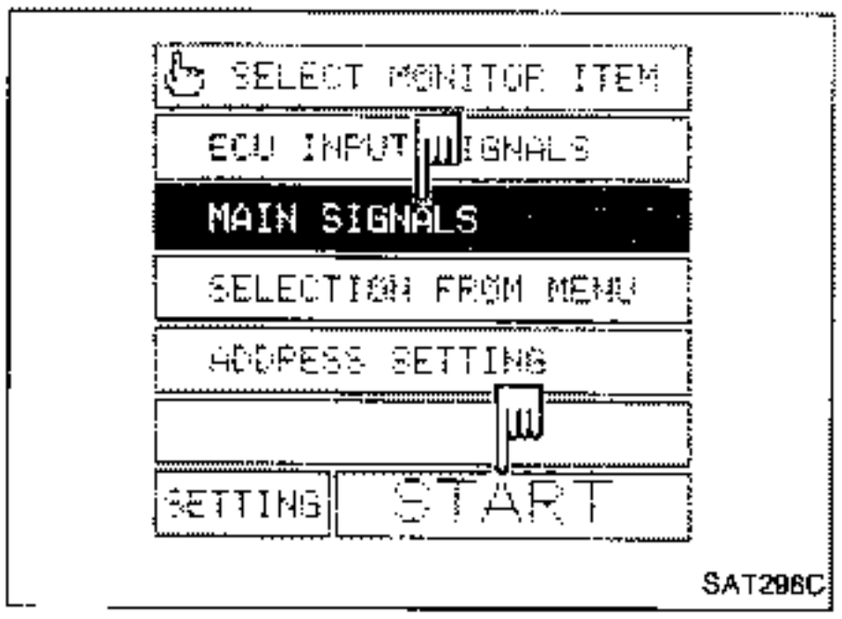

9. Go back to SELECT MONITOR ITEM and touch "MAIN SIGNALS".
10. Touch "START".

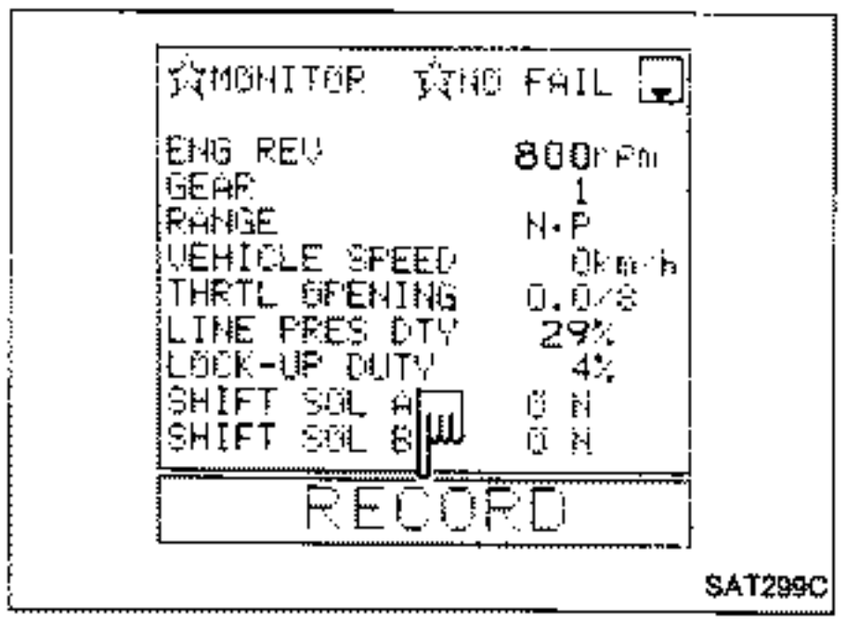

11. When performing cruise test, touch "RECORD".

Preliminary Check (Cont'd)

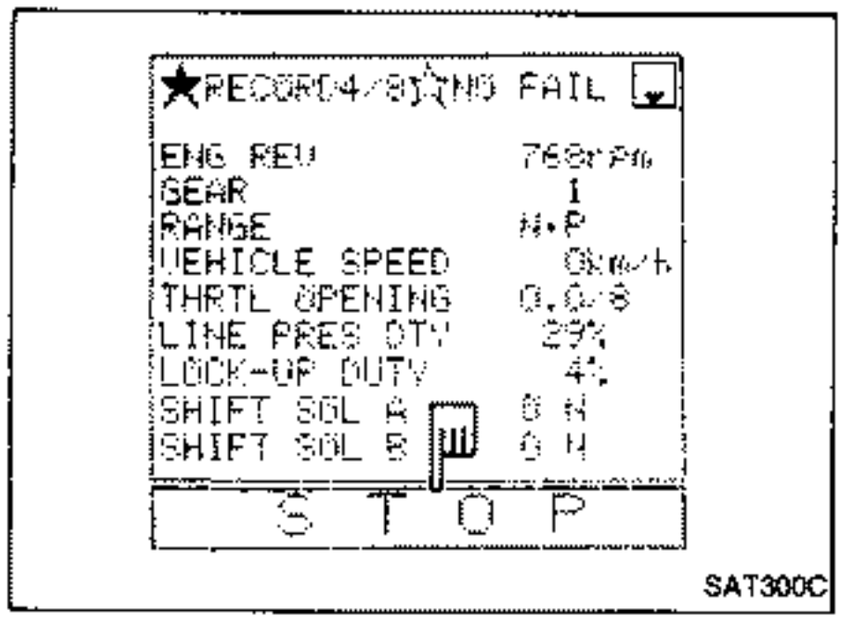

SAT300C

12. After finishing cruise test part 1, touch "STOP".

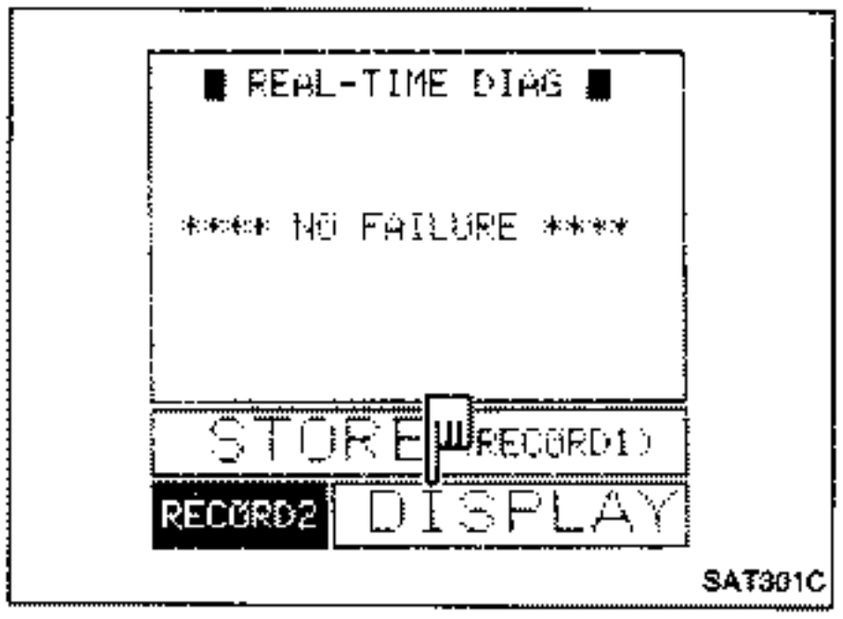

SAT301C

13. Touch "DISPLAY".

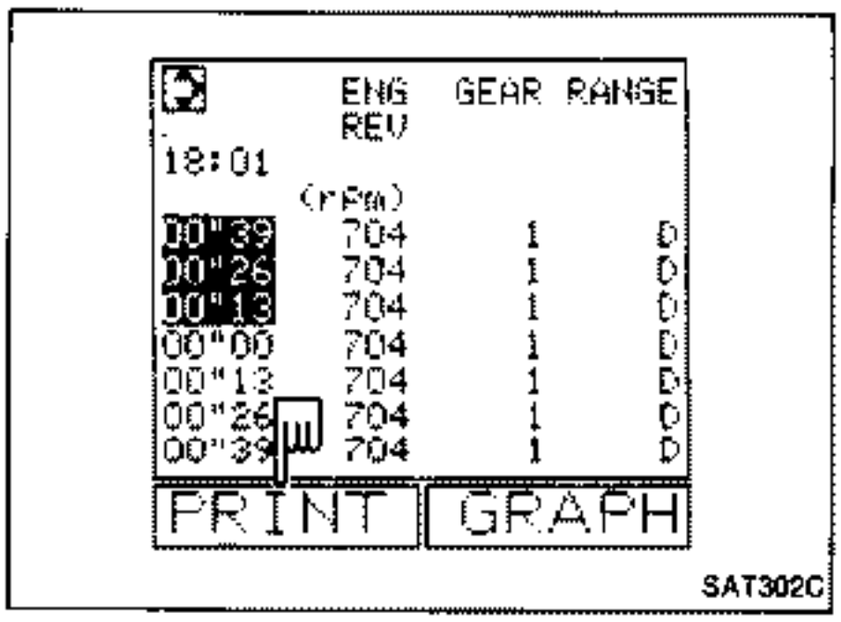

SAT302C

14. Touch "PRINT".

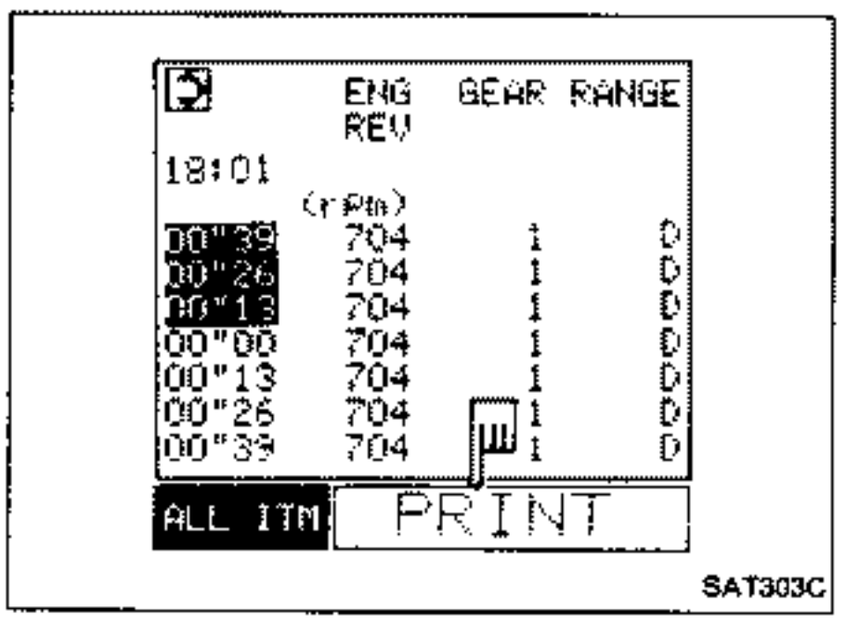

SAT303C

15. Touch "PRINT" again.

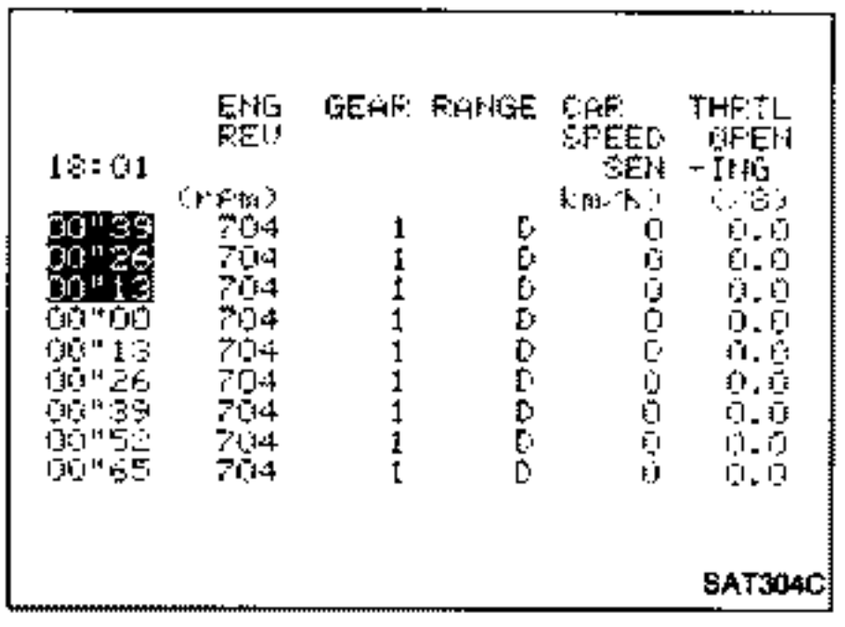

SAT304C

16. Check the monitor data printed out.
17. Continue cruise test part 2 and 3.

Preliminary Check (Cont'd)

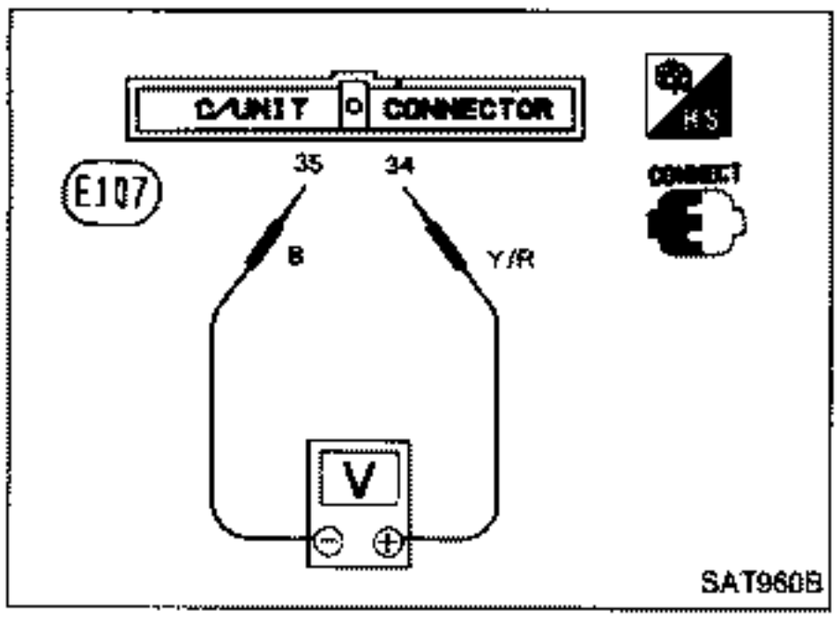

Without CONSULT

- Throttle position can be controlled by voltage across terminals ㉞ and ㉟ of A/T control unit.

Preliminary Check (Cont'd)

Cruise test — Part 1

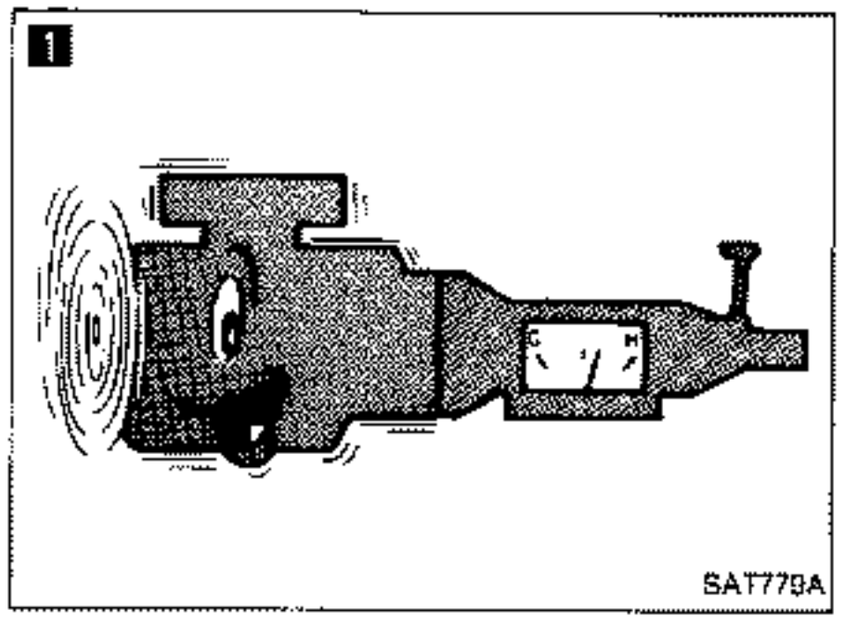

1

Warm up engine until engine oil and A.T.F. reach operating temperature after vehicle has been driven approx. 10 minutes.

A.T.F. operating temperature:
50 - 80°C (122 - 176°F)

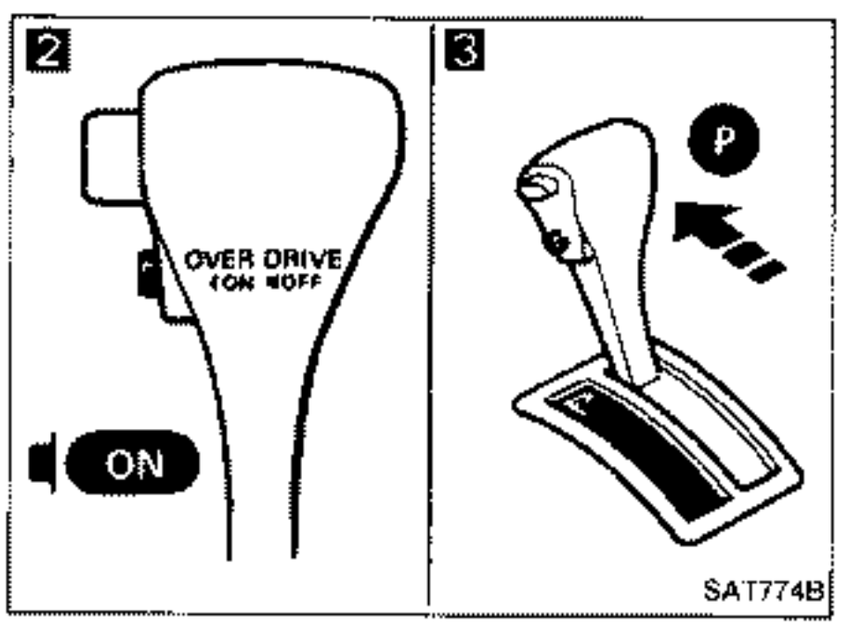

Park vehicle on flat surface.

2

Set overdrive switch in "ON" position.

3

Move selector lever to "P" range.

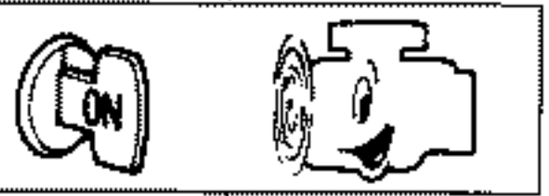

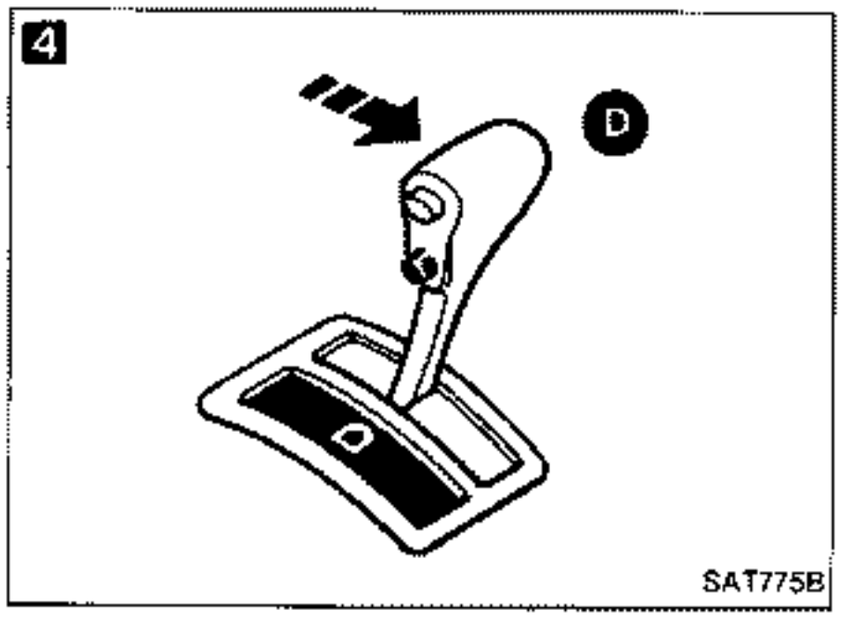

4

Move selector lever to "D" range.

5

Accelerate vehicle to half throttle.

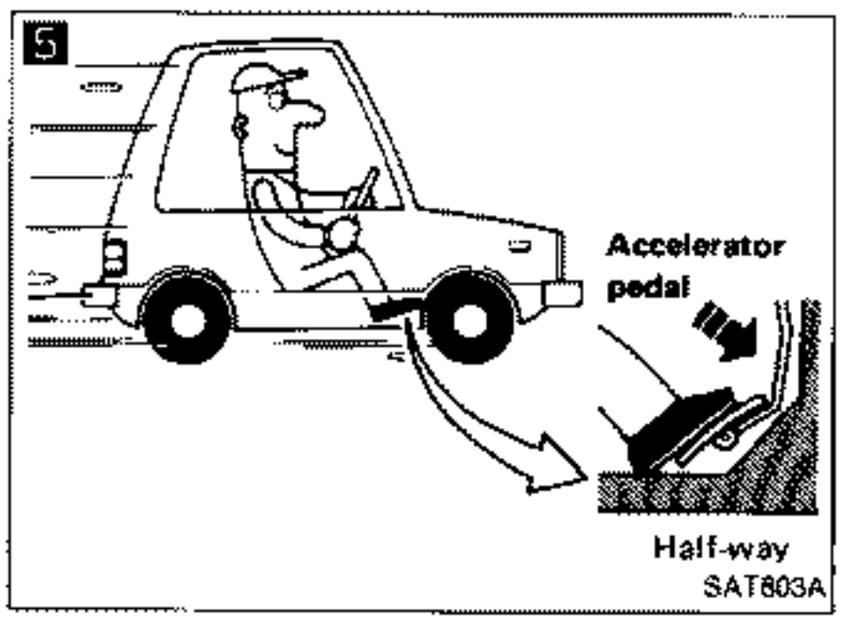

Does vehicle start from D_1?

Read gear position.

No → Go to Diagnostic Procedure 8.

Yes

Ⓐ

Preliminary Check (Cont'd)

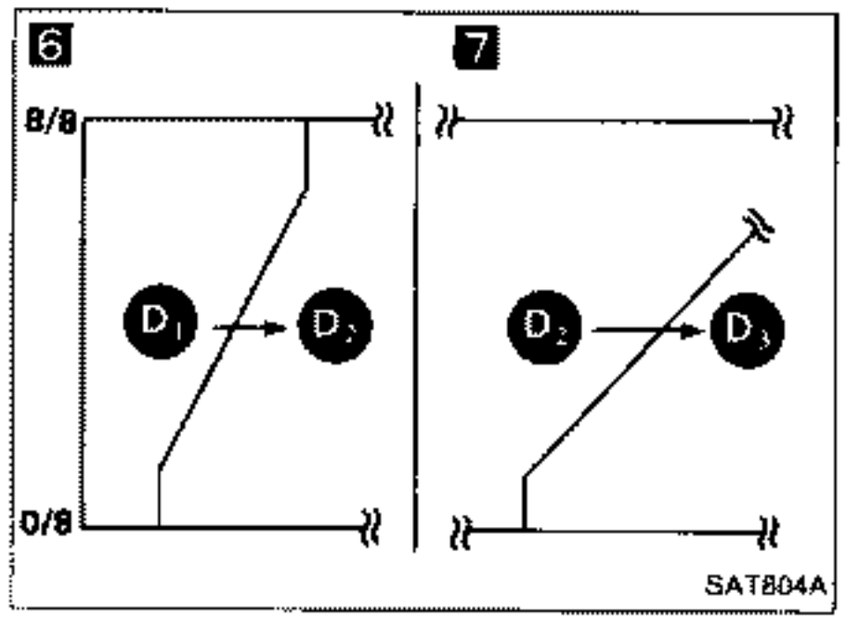

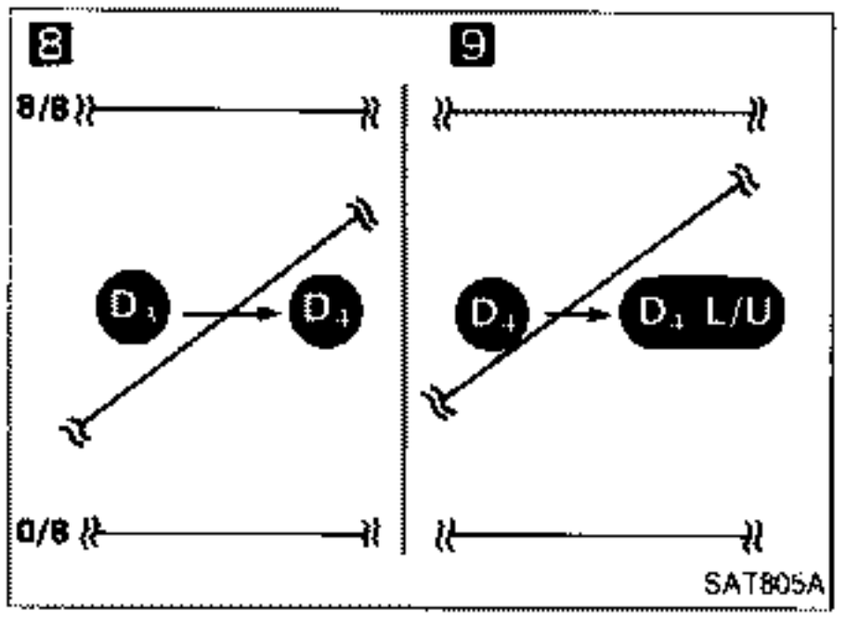

Ⓐ

6 Does A/T shift from D_1 to D_2 at the specified speed?

Read gear position, throttle opening and vehicle speed.

Specified speed when shifting from D_1 to D_2:
Refer to Shift schedule.

No → Go to Diagnostic Procedure 9.

Yes ↓

7 Does A/T shift from D_2 to D_3 at the specified speed?

Read gear position, throttle opening and vehicle speed.

Specified speed when shifting from D_2 to D_3:
Refer to Shift schedule.

No → Go to Diagnostic Procedure 10.

Yes ↓

8 Does A/T shift from D_3 to D_4 at the specified speed?

Read gear position, throttle opening and vehicle speed.

Specified speed when shifting from D_3 to D_4:
Refer to Shift schedule.

No → Go to Diagnostic Procedure 11.

Yes ↓

9 Does A/T perform lock-up at the specified speed?

Read vehicle speed, throttle opening when lock-up duty becomes 94%.

Specified speed when lock-up occurs:
Refer to Shift schedule.

No → Go to Diagnostic Procedure 12.

Yes ↓

Does A/T hold lock-up condition for more than 30 seconds?

No → Go to Diagnostic Procedure 13.

Yes ↓

Ⓑ

Preliminary Check (Cont'd)

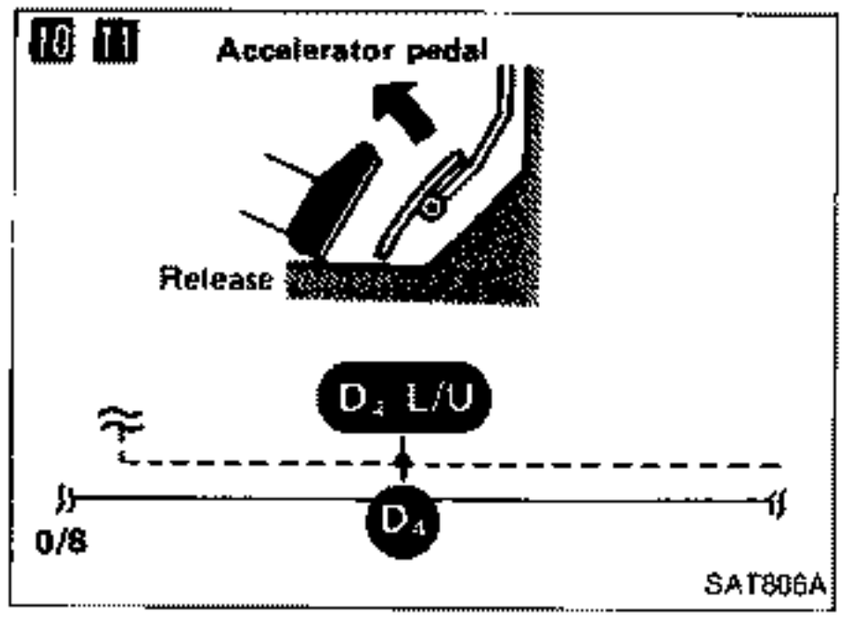

Ⓑ

10

Release accelerator pedal.

11

Is lock-up released when accelerator pedal is released?

No → Go to Diagnostic Procedure 14.

Yes

12

Decelerate vehicle by applying foot brake lightly.

13

Does engine speed return to idle smoothly when A/T is shifted from D_4 to D_3?

No → Go to Diagnostic Procedure 15.

Read gear position and engine speed.

Yes

Stop vehicle.

Go to "Cruise test — Part 2".

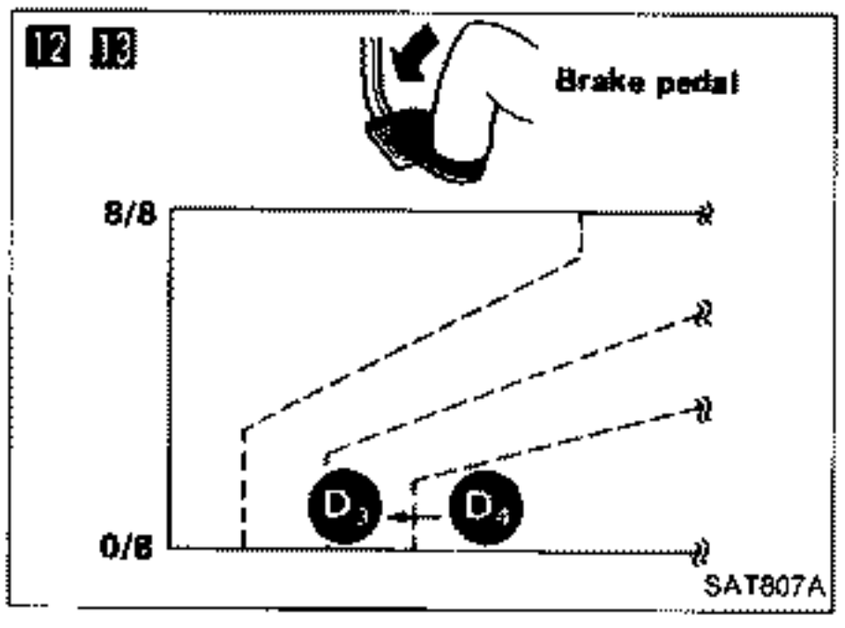

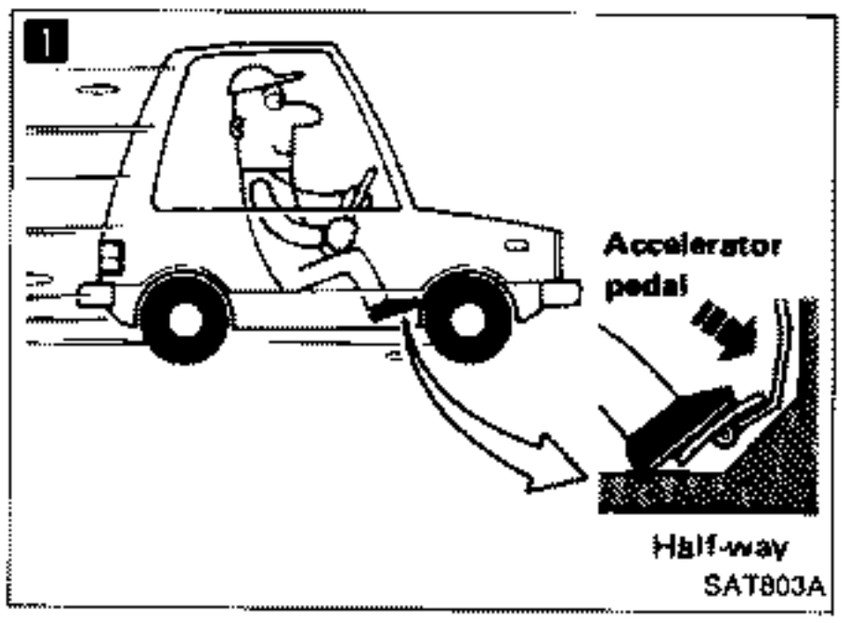

Cruise test — Part 2

Confirm overdrive switch is in "ON" position.

Confirm selector lever is in "D" range.

1

Accelerate vehicle to half throttle again.

Does vehicle start from D_1?

No → Go to Diagnostic Procedure 16.

Read gear position.

Yes

2

Accelerate vehicle to A km/h as shown in illustration.

Ⓐ

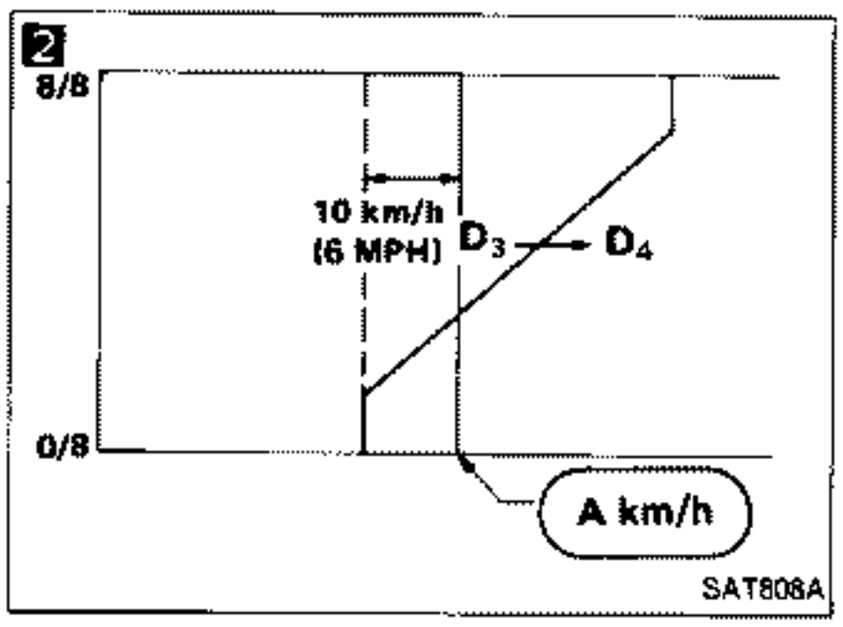

Preliminary Check (Cont'd)

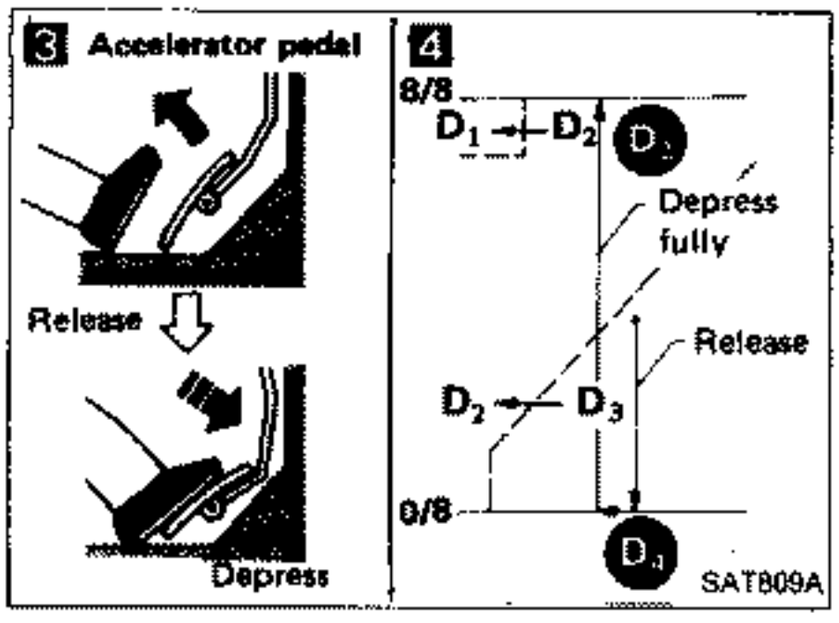

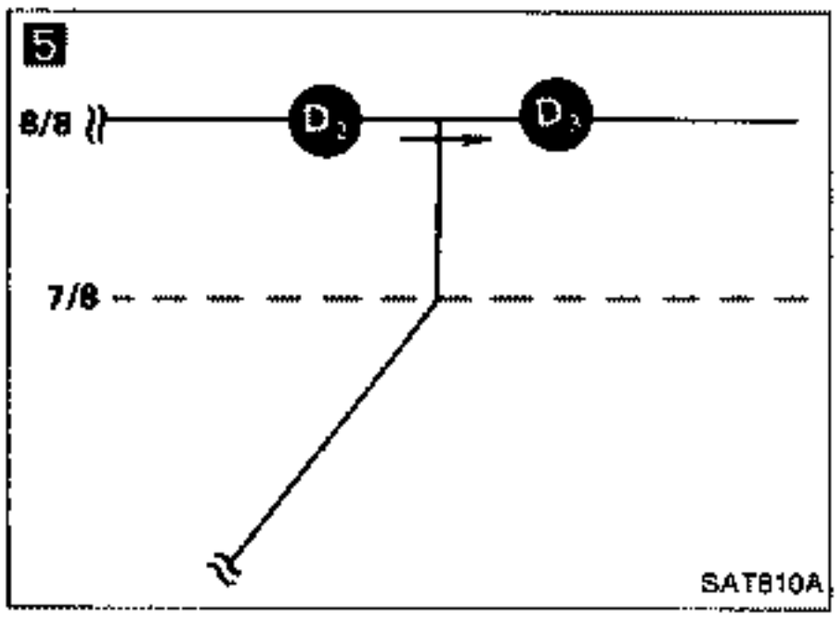

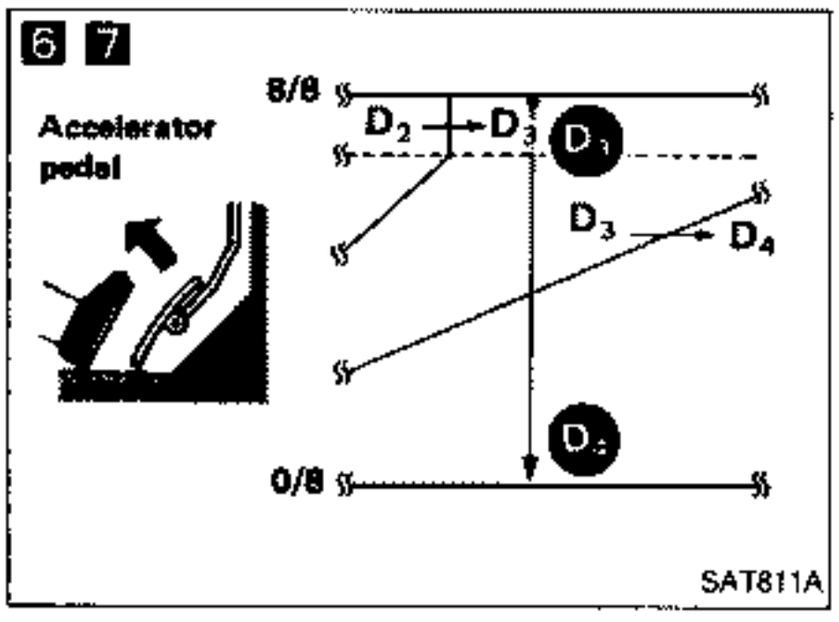

A

3 Release accelerator pedal and then quickly depress it fully.

4 Does A/T shift from D_4 to D_2 as soon as accelerator pedal is depressed fully?
Read gear position and throttle opening.
No → Go to Diagnostic Procedure 9.

Yes

5 Does A/T shift from D_2 to D_3 at the specified speed?
Read gear position, throttle opening and vehicle speed.
Specified speed when shifting from D_2 to D_3:
Refer to Shift schedule.
No → Go to Diagnostic Procedure 10.

Yes

6 Release accelerator pedal after shifting from D_2 to D_3.

7 Does A/T shift from D_3 to D_4 and does vehicle decelerate by engine brake?
Read gear position, throttle opening and vehicle speed.
No → Go to Diagnostic Procedure 11.

Yes

Stop vehicle.

Go to "Cruise test — Part 3".

Preliminary Check (Cont'd)

Cruise test — Part 3

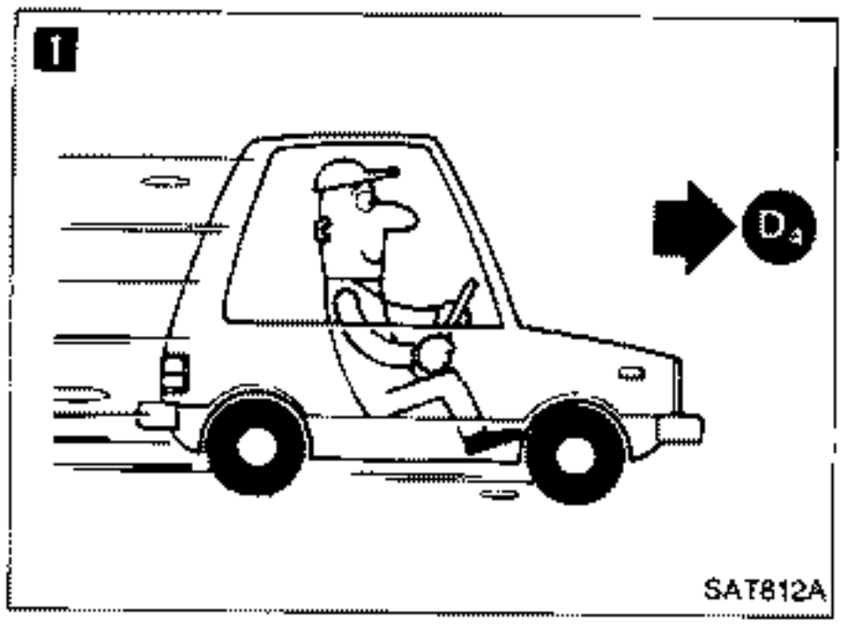

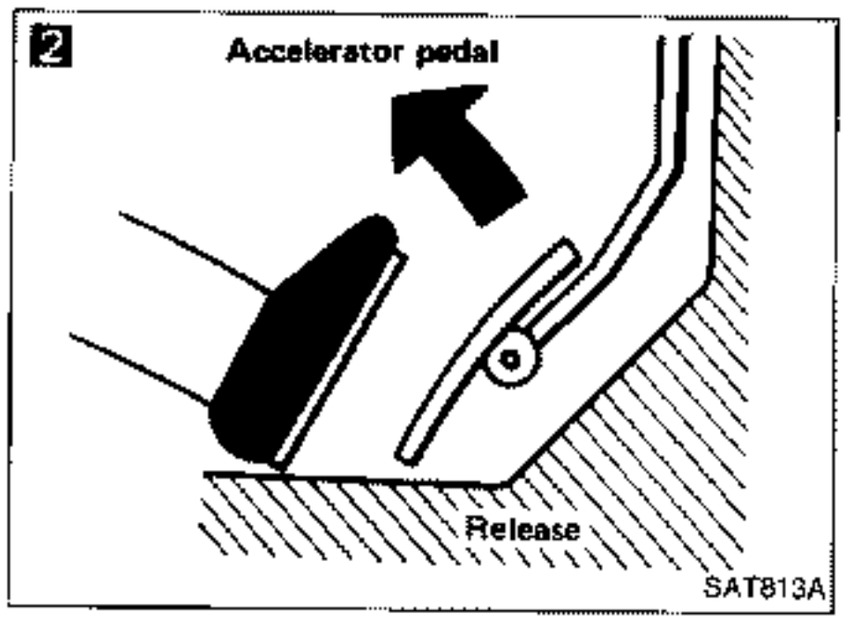

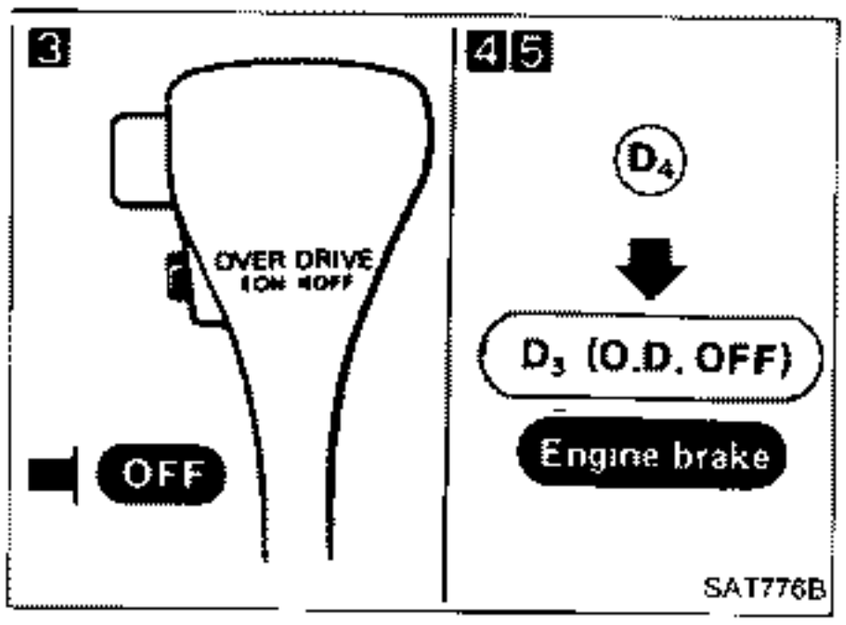

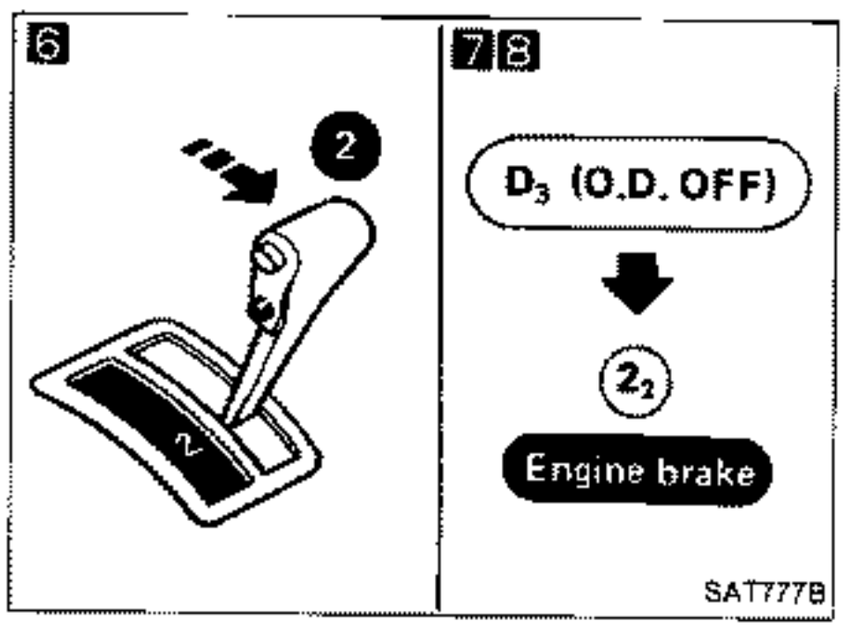

Confirm overdrive switch is in "ON" position.

↓

Confirm selector lever is in "D" range.

↓

1 Accelerate vehicle, using half-throttle, to D_4.

↓

2 Release accelerator pedal.

↓

3 Set overdrive switch in "OFF" position while driving in D_4 range.

↓

4 Does A/T shift from D_4 to D_3? — No → Go to Diagnostic Procedure 17.

Read gear position and vehicle speed.

↓ Yes

5 Does vehicle decelerate by engine brake? — No → Go to Diagnostic Procedure 15.

↓ Yes

6 Move selector lever from "D" to "2" range while driving in D_3.

↓

7 Does A/T shift from D_3 to 2_2? — No → Go to Diagnostic Procedure 18.

Read gear position.

↓ Yes

8 Does vehicle decelerate by engine brake? — No → Go to Diagnostic Procedure 15.

↓ Yes

Ⓐ

Preliminary Check (Cont'd)

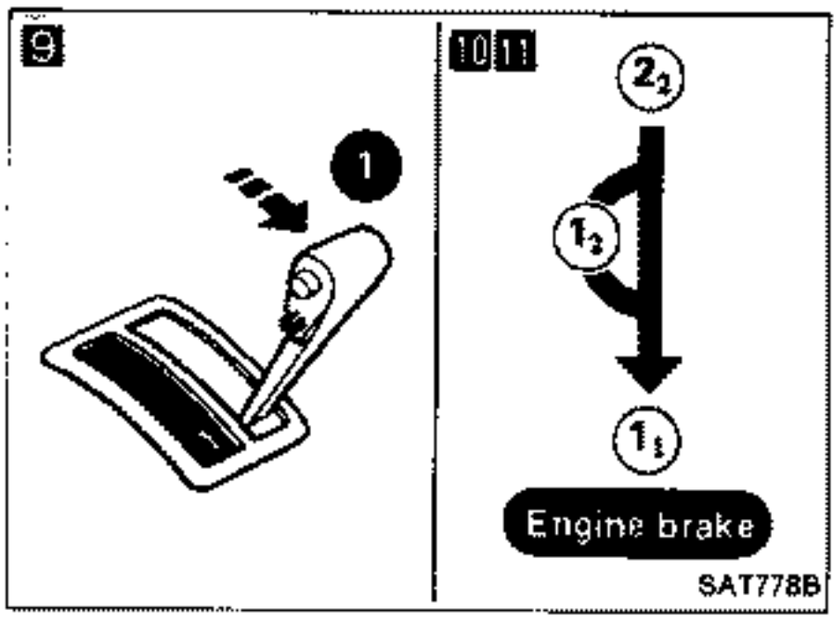

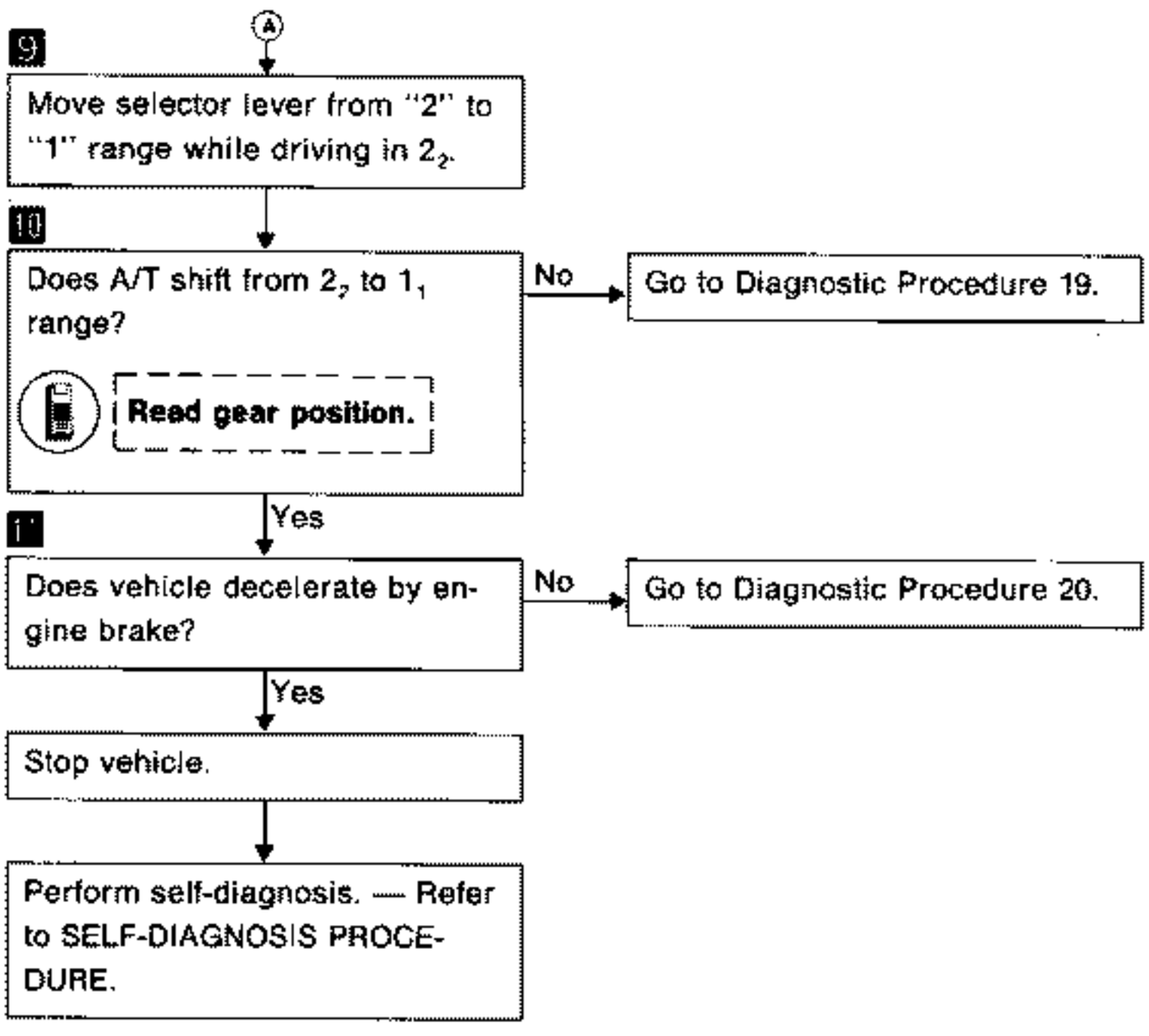

Preliminary Check (Cont'd)

Vehicle speed when shifting gears

RE4R01A

Throttle position	Vehicle speed km/h (MPH)					
	$D_1 \rightarrow D_2$	$D_2 \rightarrow D_3$	$D_3 \rightarrow D_4$	$D_4 \rightarrow D_3$	$D_3 \rightarrow D_2$	$D_2 \rightarrow D_1$
Full throttle	50 - 54 (31 - 34)	107 - 115 (66 - 71)	166 - 176 (103 - 109)	161 - 169 (100 - 105)	97 - 105 (60 - 65)	44 - 46 (27 - 30)
Half throttle	45 - 49 (28 - 30)	83 - 89 (52 - 55)	119 - 127 (74 - 79)	80 - 88 (50 - 55)	33 - 39 (21 - 24)	10 - 14 (6 - 9)

RE4R03A

Throttle position	Vehicle speed km/h (MPH)					
	$D_1 \rightarrow D_2$	$D_2 \rightarrow D_3$	$D_3 \rightarrow D_4$	$D_4 \rightarrow D_3$	$D_3 \rightarrow D_2$	$D_2 \rightarrow D_1$
Full throttle	68 - 72 (42 - 45)	120 - 128 (75 - 80)	183 - 193 (114 - 120)	177 - 187 (110 - 116)	111 - 119 (69 - 74)	47 - 51 (29 - 32)
Half throttle	47 - 51 (29 - 32)	89 - 95 (55 - 59)	136 - 144 (85 - 89)	118 - 126 (73 - 78)	79 - 85 (49 - 53)	10 - 14 (6 - 9)

Vehicle speed when performing and releasing lock-up

RE4R01A

Throttle position	O.D. switch [Shift range]	Vehicle speed km/h (MPH)	
		Lock-up "ON"	Lock-up "OFF"
Full throttle	ON [D_4]	167 - 175 (104 - 109)	161 - 169 (100 - 105)
	OFF [D_3]	107 - 115 (66 - 71)	97 - 105 (60 - 65)
Half throttle	ON [D_4]	120 - 128 (75 - 80)	84 - 92 (52 - 57)
	OFF [D_3]	91 - 99 (57 - 62)	86 - 94 (53 - 58)

RE4R03A

Throttle position	O.D. switch [Shift range]	Vehicle speed km/h (MPH)	
		Lock-up "ON"	Lock-up "OFF"
Full throttle	ON [D_4]	184 - 192 (114 - 119)	178 - 186 (111 - 116)
	OFF [D_3]	120 - 128 (75 - 80)	111 - 119 (69 - 74)
Half throttle	ON [D_4]	136 - 144 (85 - 89)	117 - 125 (73 - 78)
	OFF [D_3]	91 - 99 (57 - 62)	86 - 94 (53 - 58)

Preliminary Check (Cont'd)

Shift schedule (Overdrive ON) — RE4R01A

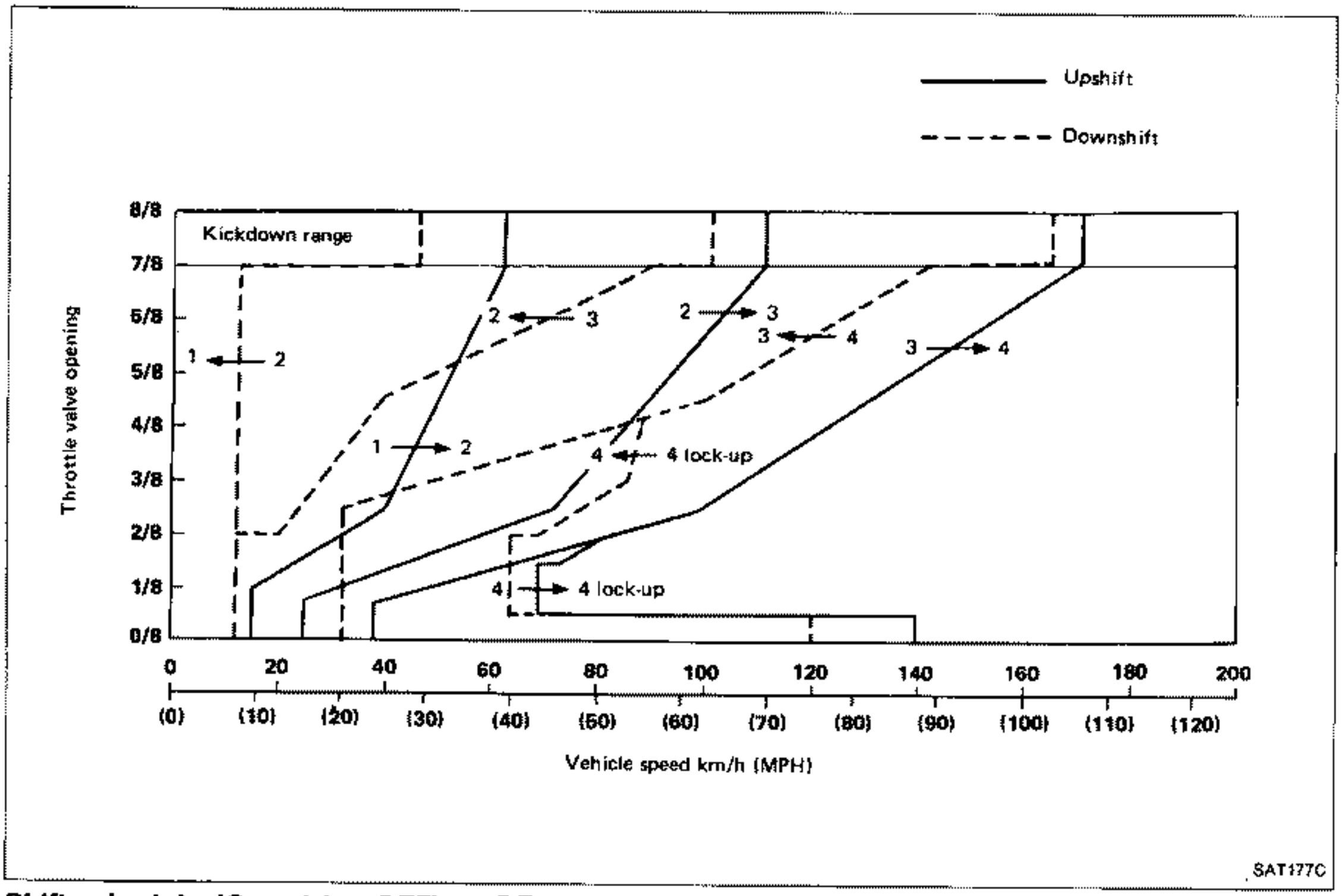

Shift schedule (Overdrive OFF) — RE4R01A

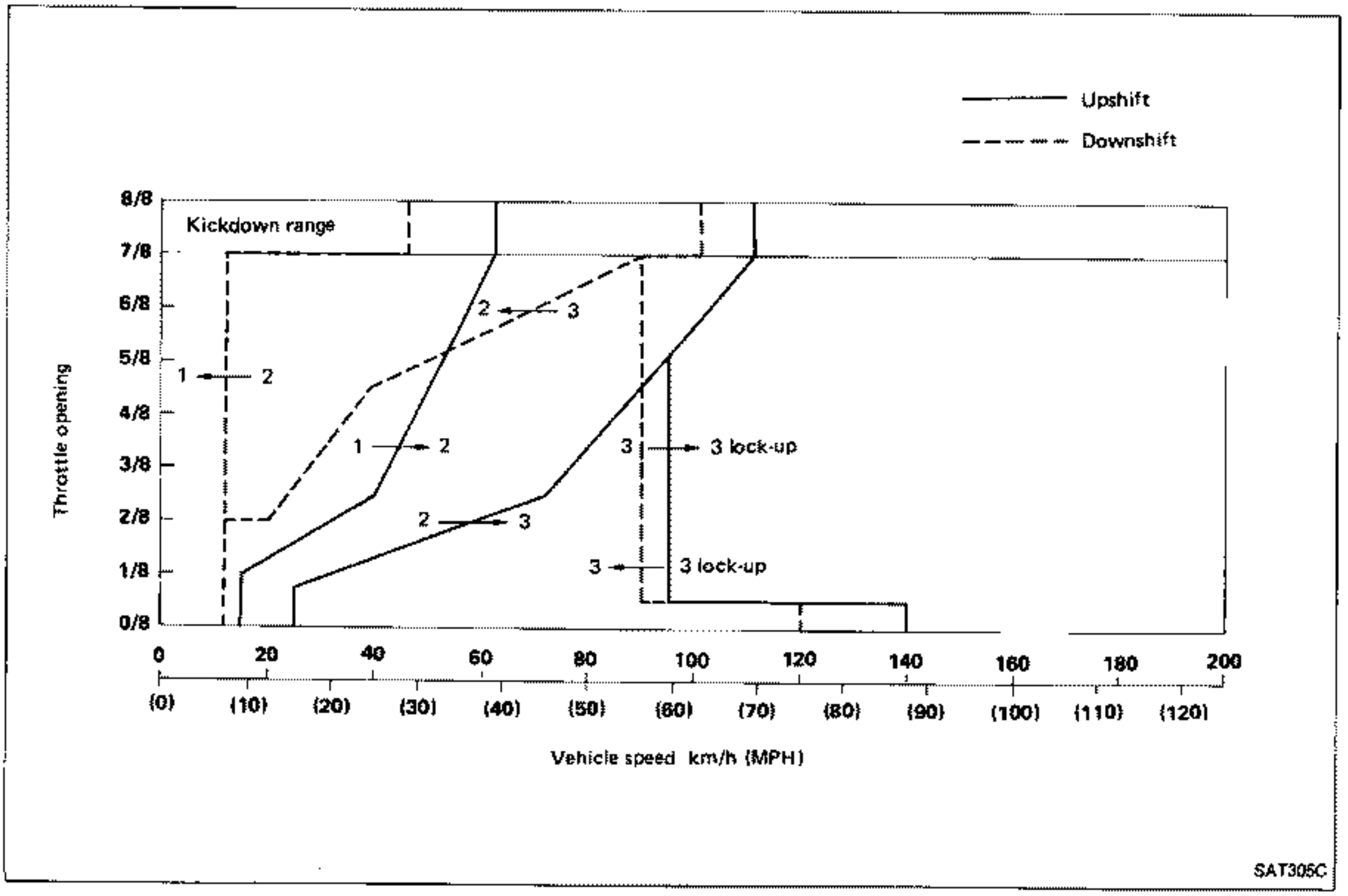

Preliminary Check (Cont'd)

Shift schedule (Overdrive ON) — RE4R03A

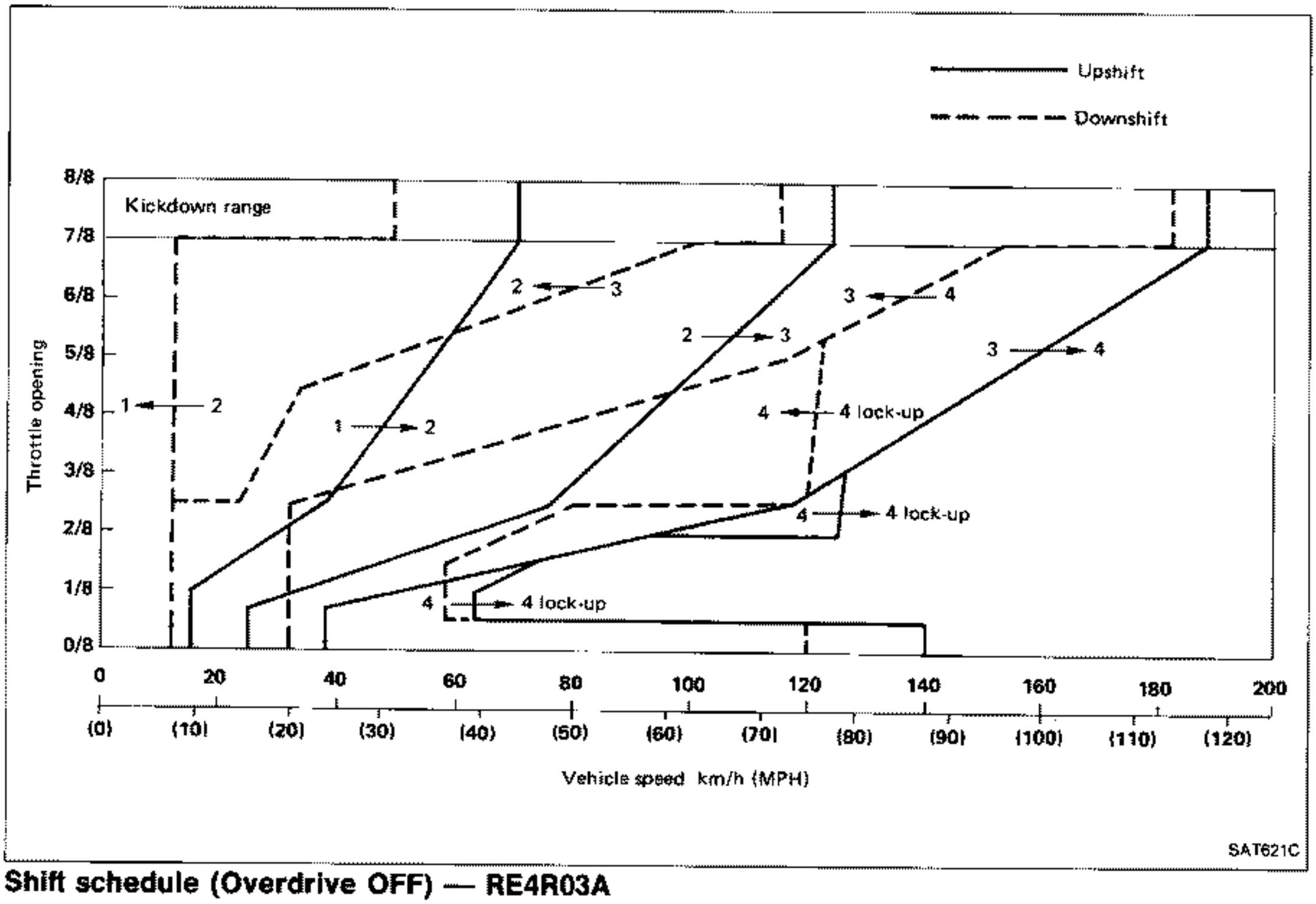

Shift schedule (Overdrive OFF) — RE4R03A

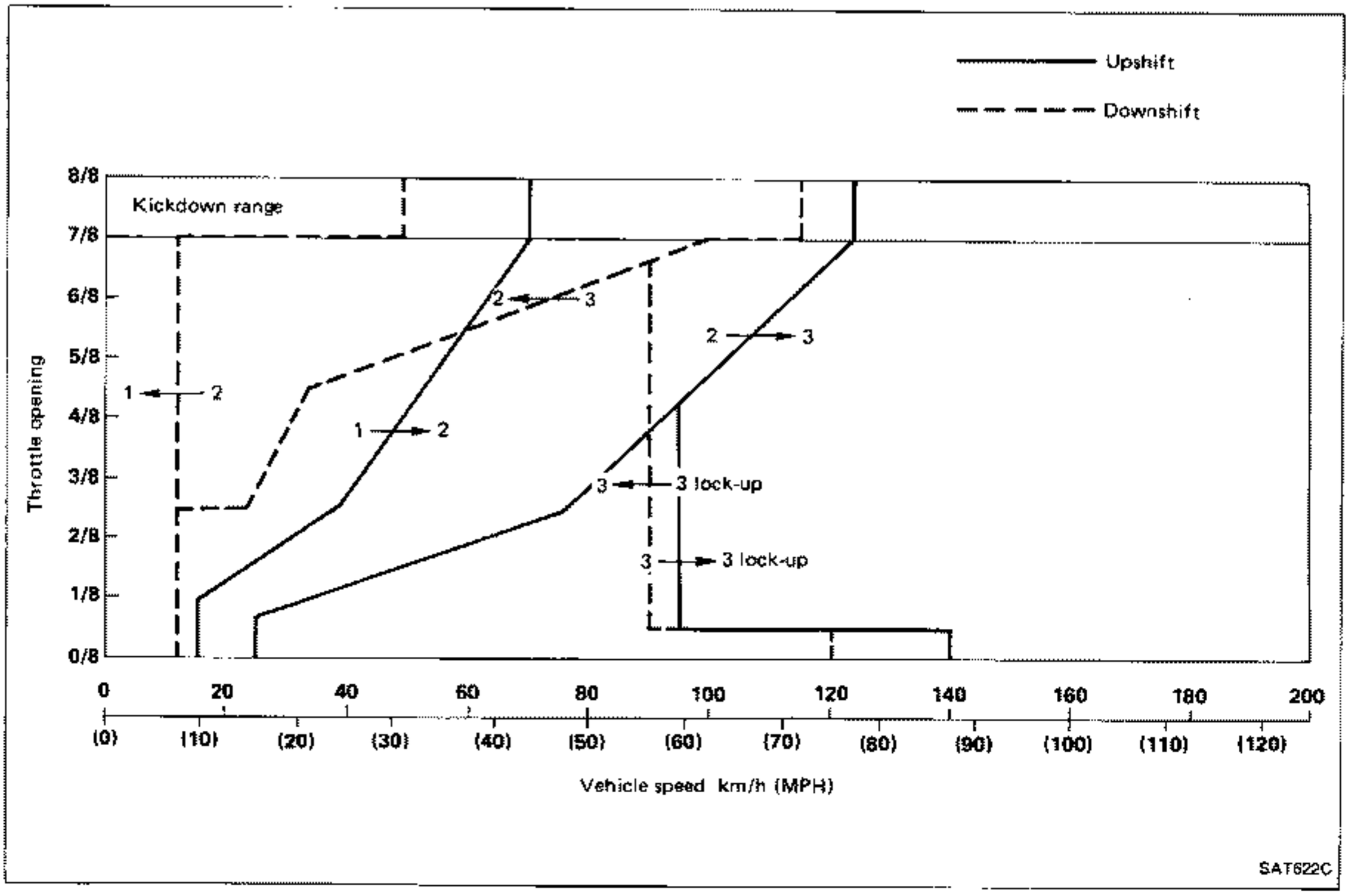

Diagnosis by CONSULT

NOTICE

1. The CONSULT electrically displays shift timing and lock-up timing (that is, operation timing of each solenoid). When a noticeable time difference occurs between shift timing which is manifested by shift shock and the CONSULT display, mechanical parts (except solenoids, sensors, etc.) are considered to be malfunctioning. Check mechanical parts using applicable diagnostic procedures.
2. Shift schedule (which implies gear position) displayed on CONSULT and that indicated in Service Manual may differ slightly. This occurs because of the following reasons:
   - Actual shift schedule has more or less tolerance or allowance,
   - Shift schedule indicated in Service Manual refers to the point where shifts starts, and
   - Gear position displayed on CONSULT indicates the point where shifts are completed.
3. Shift solenoid "A" or "B" is displayed on CONSULT at the start of shifting while gear position is displayed upon completion of shifting (which is computed by A/T control unit).

Diagnosis by CONSULT (Cont'd)

DATA MONITOR APPLICATION

Item	Application
Vehicle speed sensor 1 (A/T)	X
Vehicle speed sensor 2 (meter)	X
Throttle sensor	X
Fluid temperature sensor	X
Battery voltage	X
Engine rpm	X
Selector lever switch (O.D. switch)	X
A.S.C.D. — cruise signal	X
A.S.C.D. — O.D. cut signal	X
Kickdown switch	X
Power shift switch	—
Idle switch	X
Full throttle switch	X
Shift solenoid A	X
Shift solenoid B	X
Overrun clutch solenoid	X
*Shift solenoid A (feedback)	X
*Shift solenoid B (feedback)	X
*Overrun clutch solenoid (feedback)	X
Hold mode switch	—
1 range switch	X
2 range switch	X
D range switch	X
N range switch	X
R range switch	X
Gear position	X
Range position	X
Vehicle speed	X
Throttle opening	X
Line-pressure solenoid	X
Lock-up solenoid	X

X: Applicable —: Not applicable

Diagnosis by CONSULT (Cont'd)

DATA ANALYSIS

Item	Display	Condition
Lock-up duty	Approximately 4% ↓ Approximately 94%	Lock-up "OFF" ↓ Lock-up "ON"
Line pressure duty	Approximately 29% ↓ Approximately 94%	Low line-pressure (Small throttle opening) ↓ High line-pressure (Large throttle opening)
Throttle sensor	Approximately 0.5V	Fully-closed throttle
	Approximately 4V	Fully-open throttle
Fluid temperature sensor	Approximately 1.5V ↓ Approximately 0.5V	Cold [20°C (68°F)] ↓ Hot [80°C (176°F)]

Gear position	1	2	3	4
Shift solenoid A	ON	OFF	OFF	ON
Shift solenoid B	ON	ON	OFF	OFF

A/T Electrical Parts Location

L.H.D. MODEL

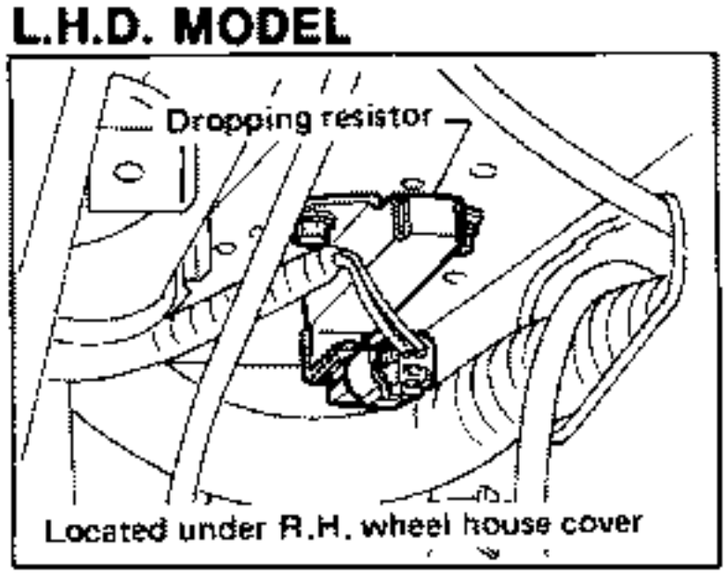

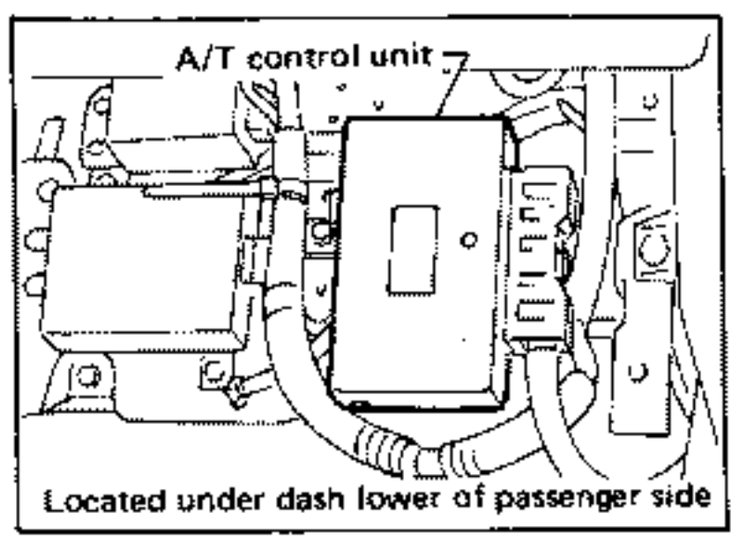

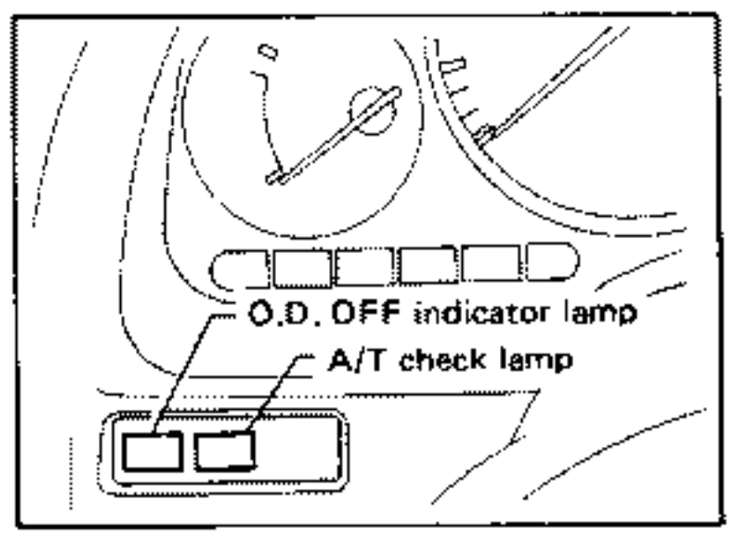

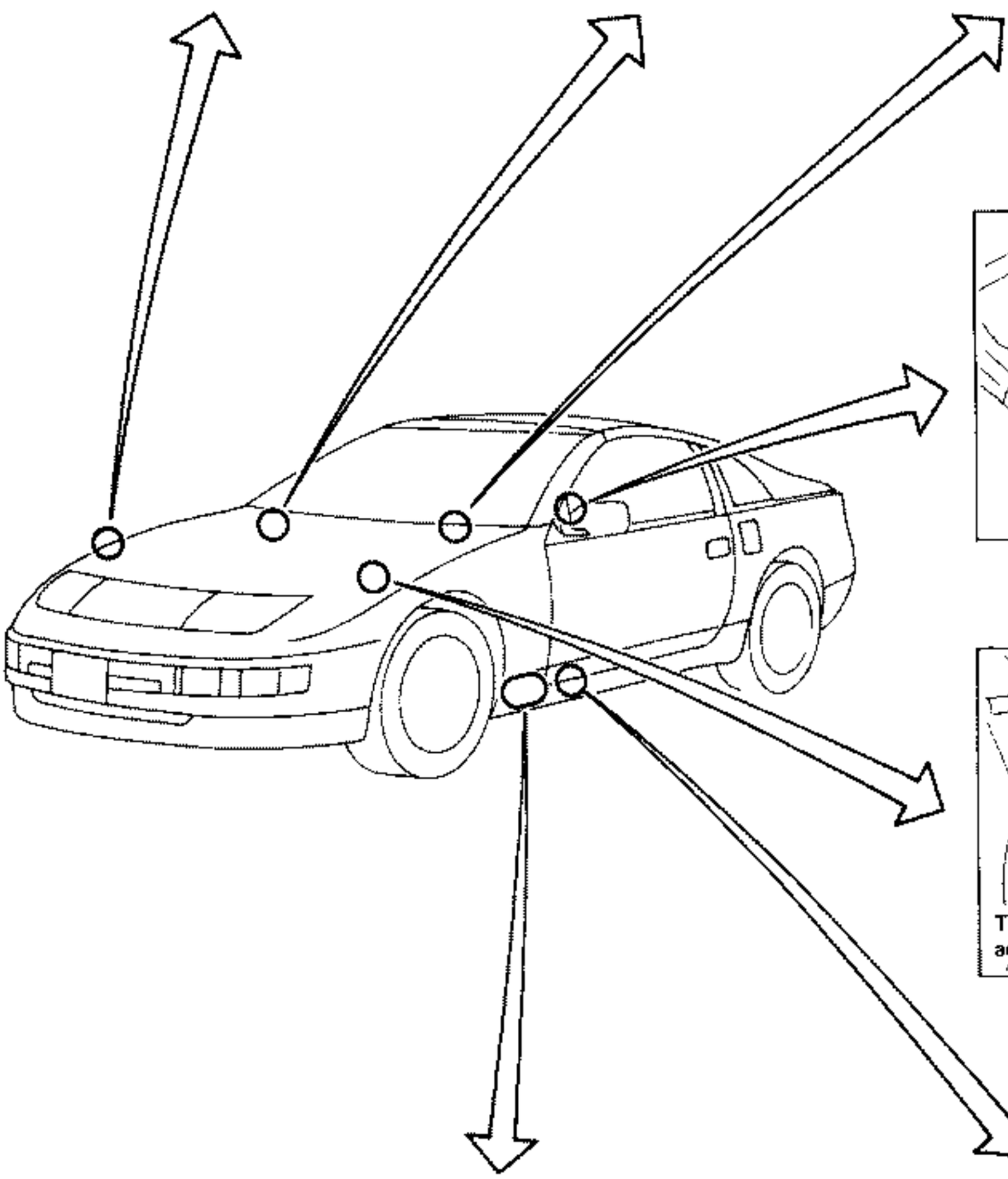

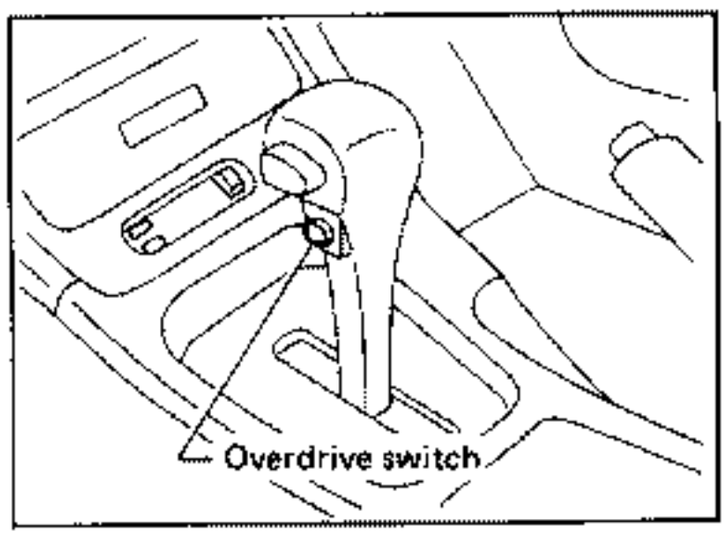

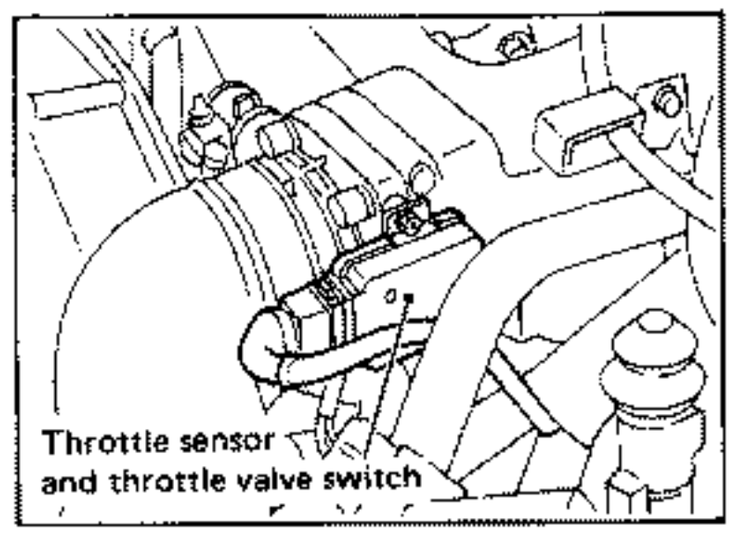

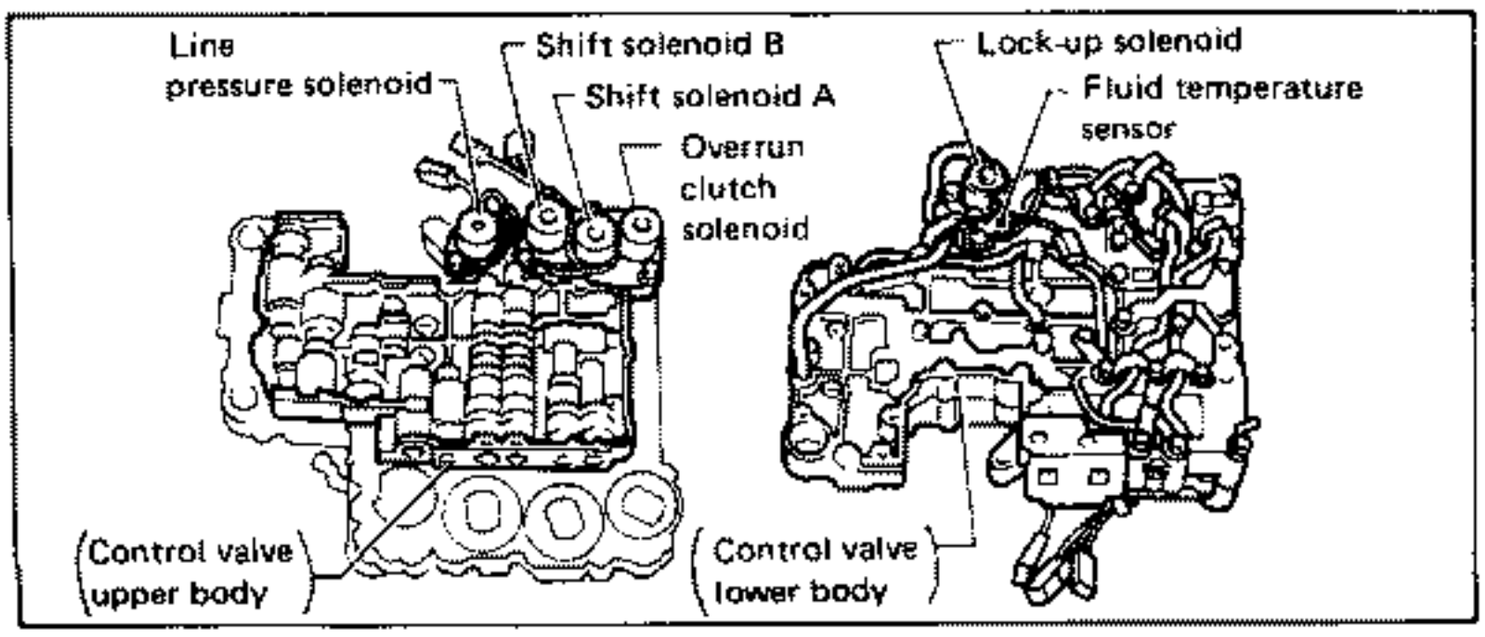

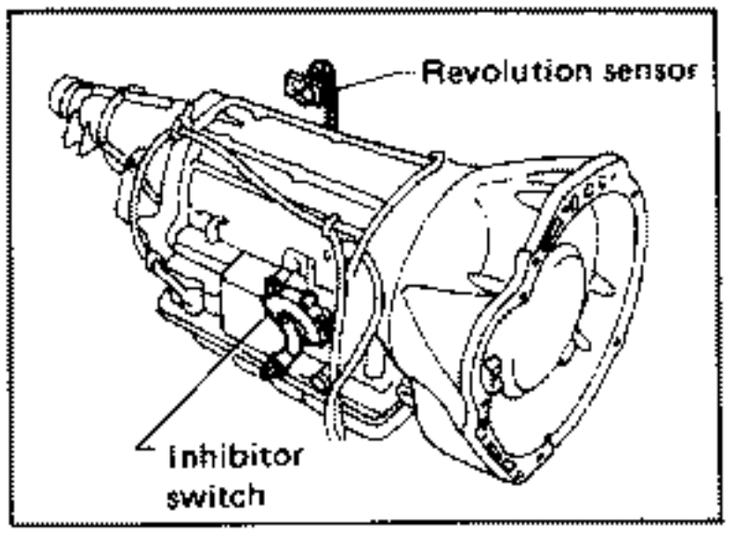

SAT356C

A/T Electrical Parts Location (Cont'd)

R.H.D. MODEL

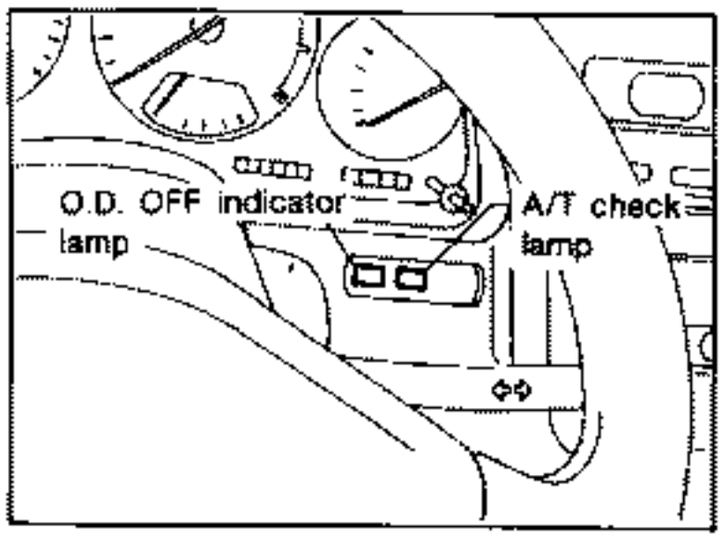

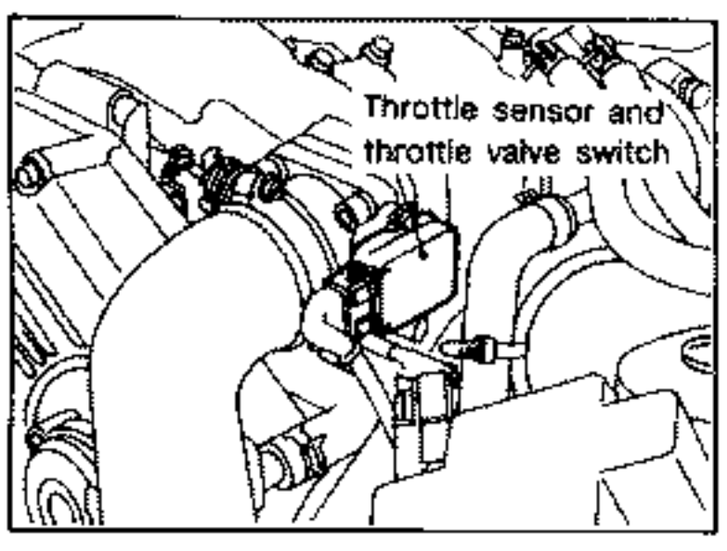

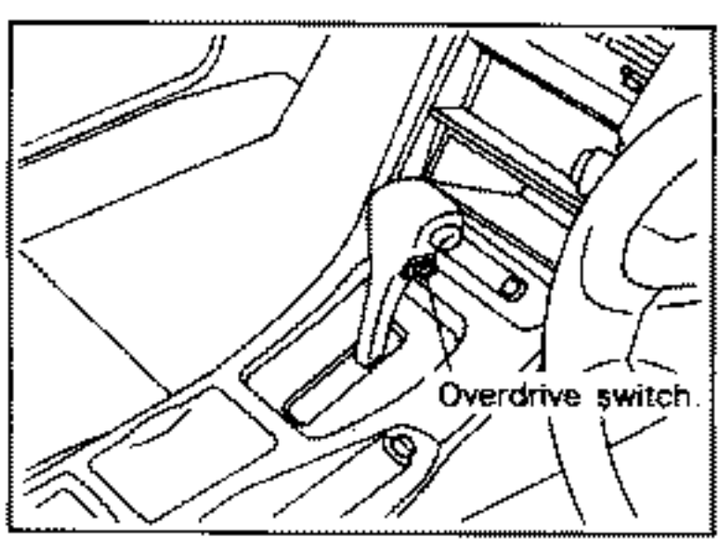

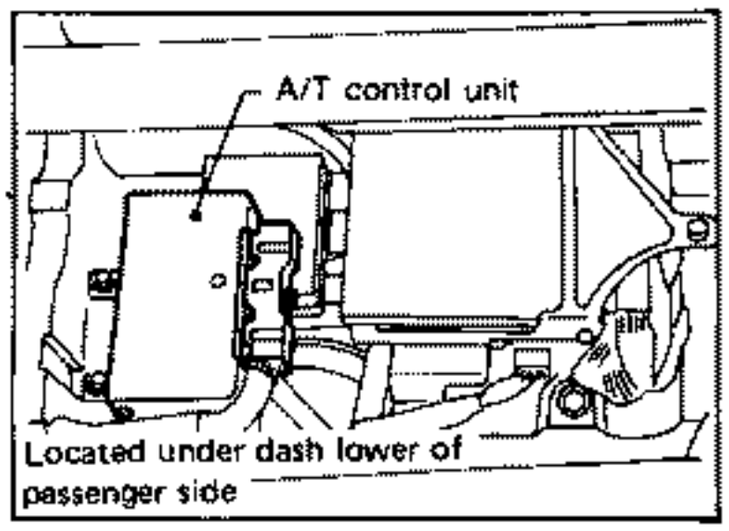

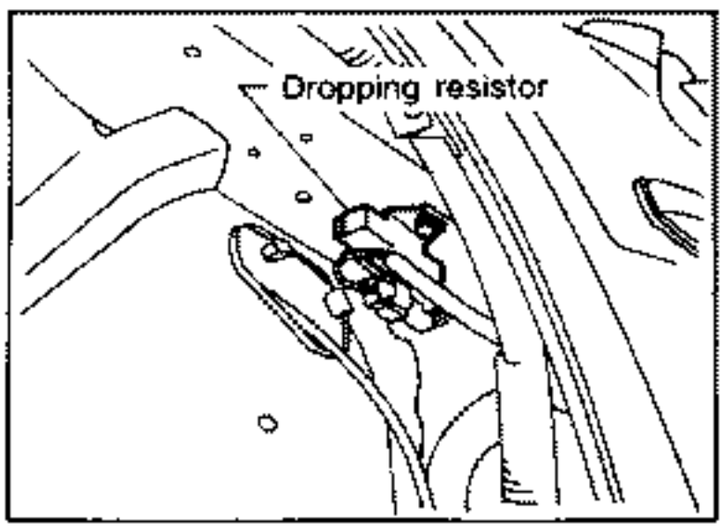

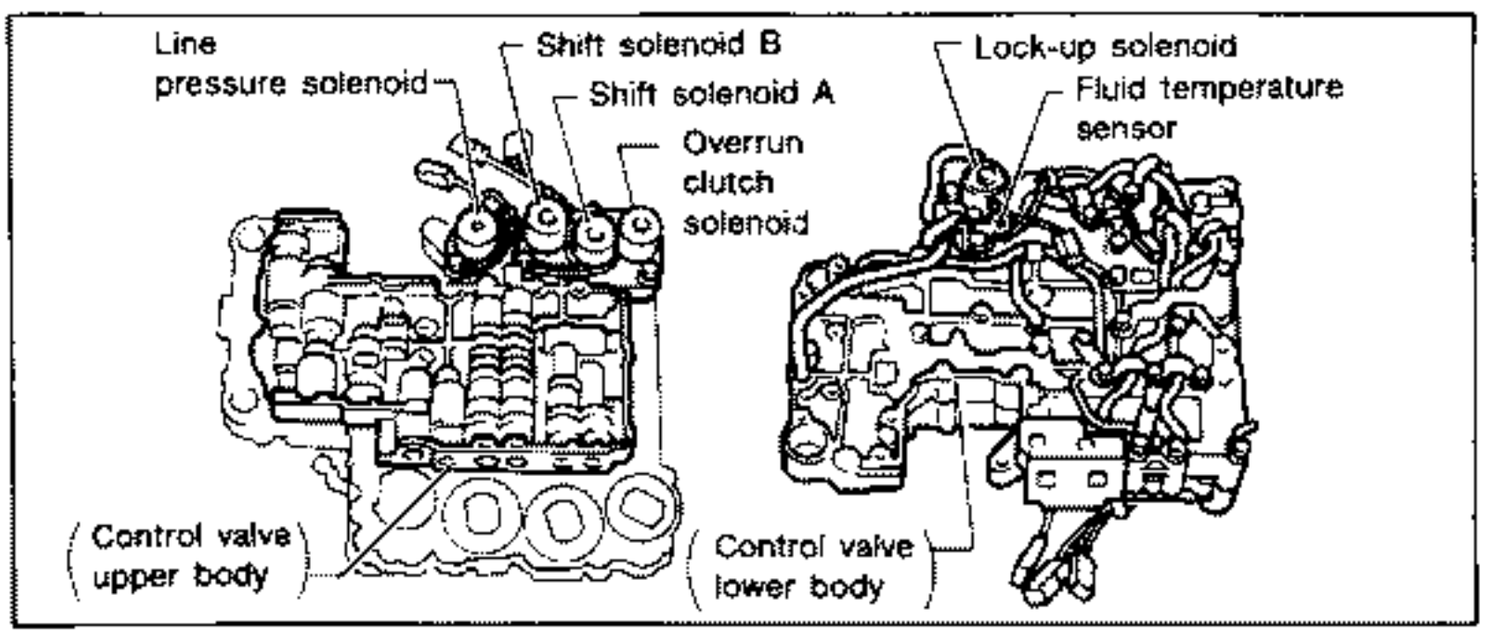

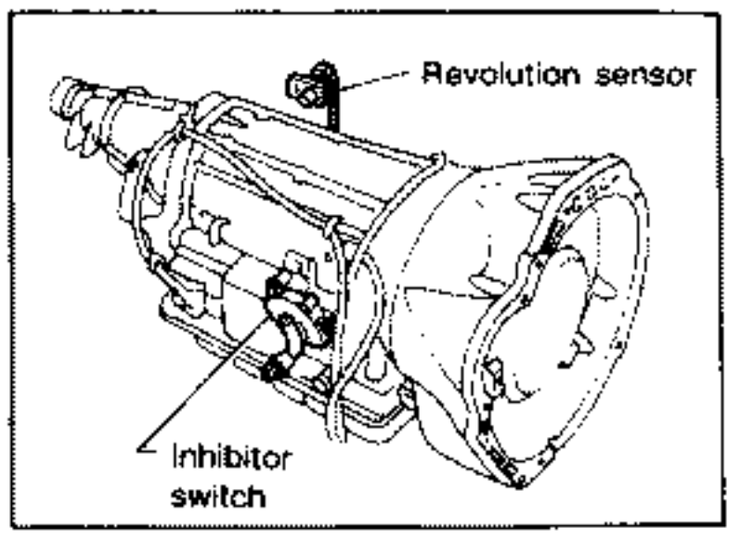

SAT916C

A/T Electrical Parts Location (Cont'd)

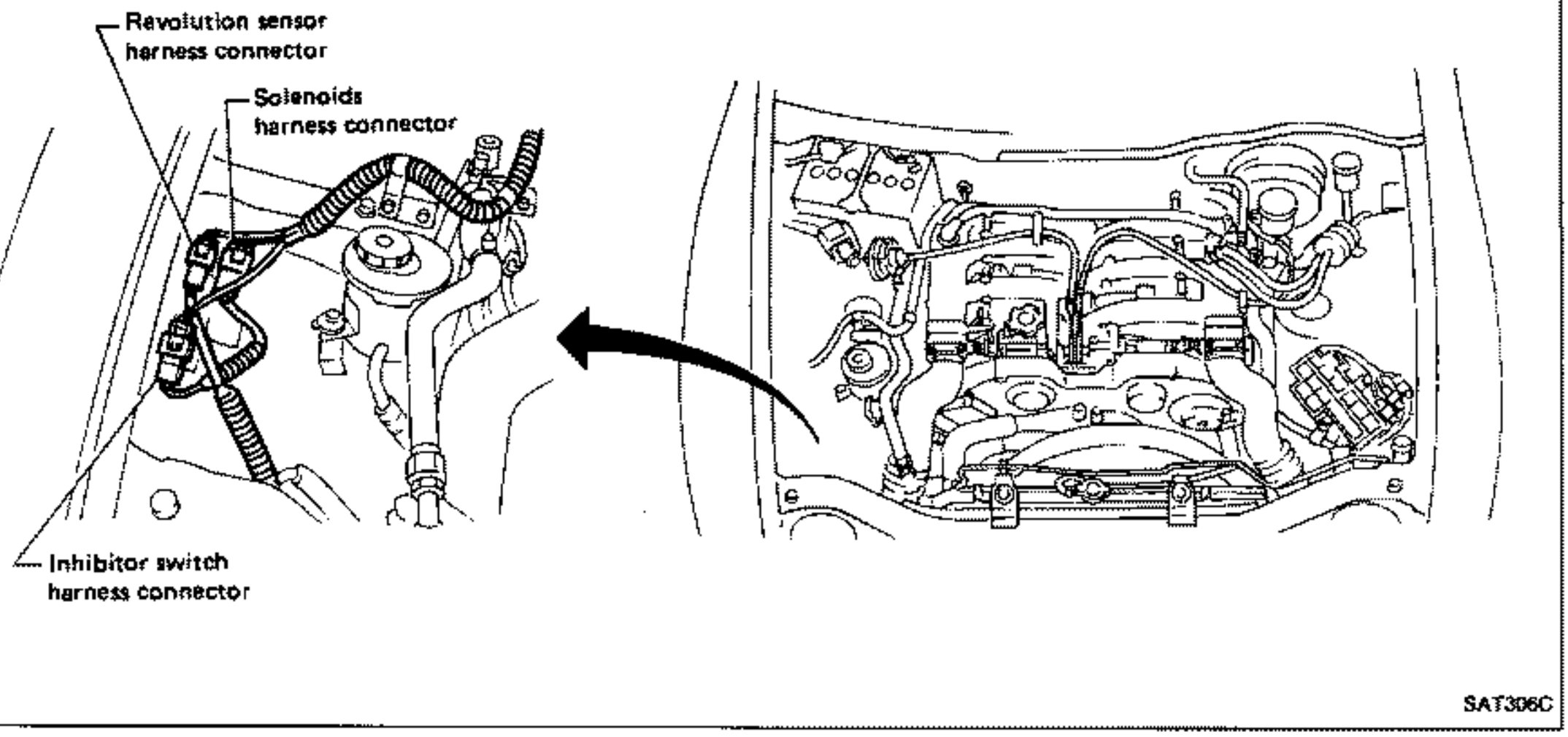

SAT306C

Circuit Diagram for Quick Pinpoint Check

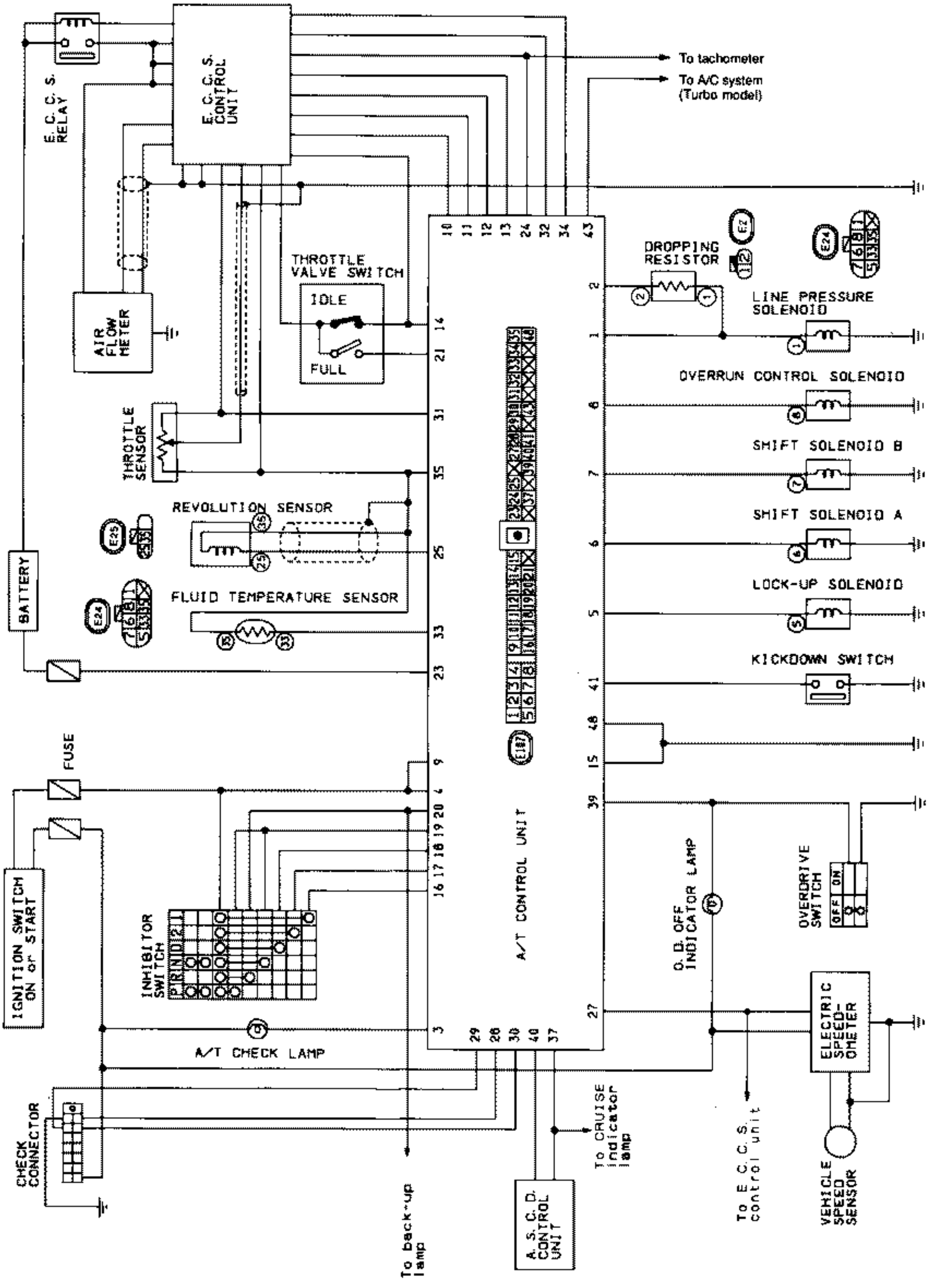

SAT501D

Wiring Diagram

L.H.D. model

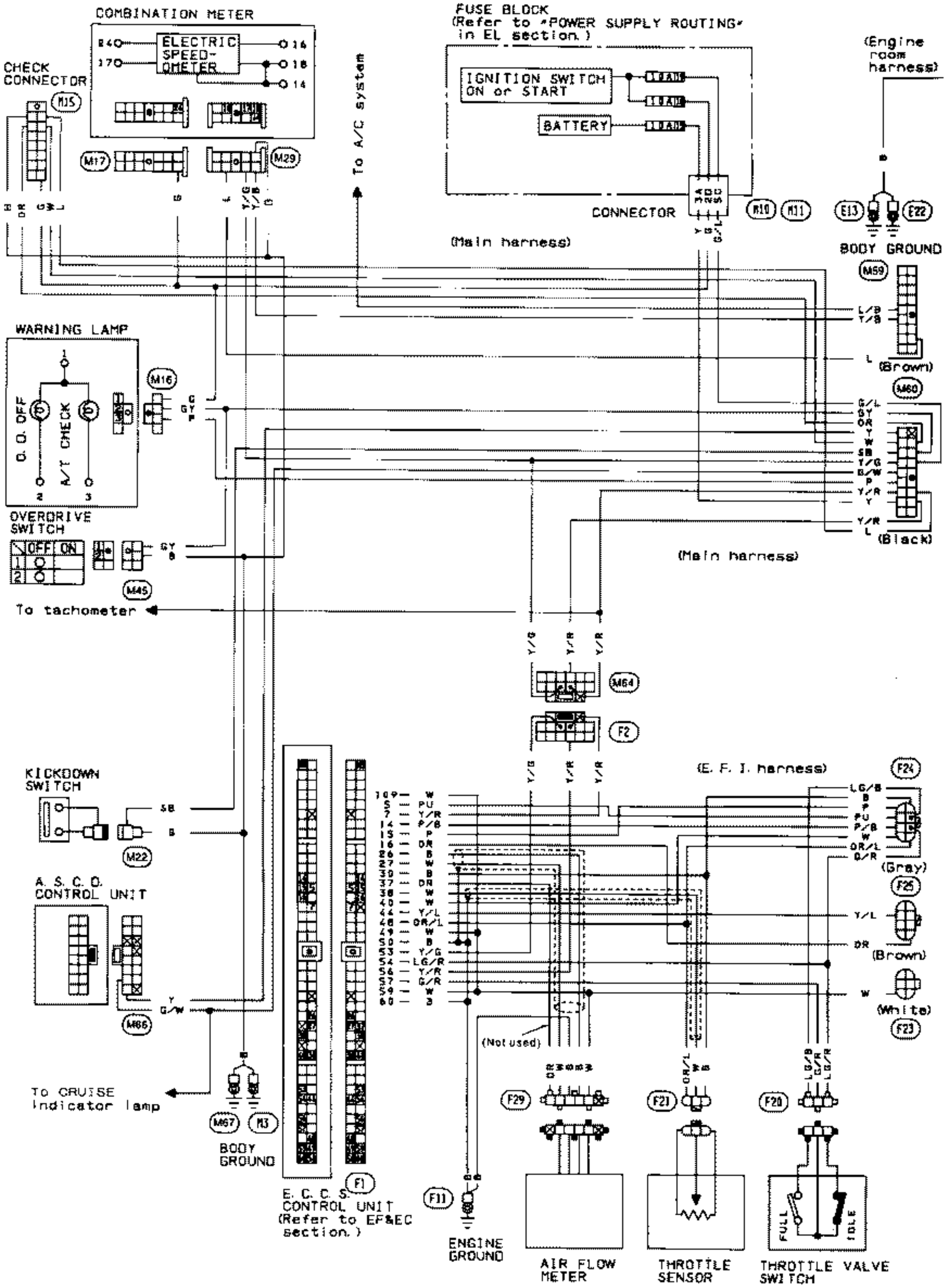

Wiring Diagram (Cont'd)

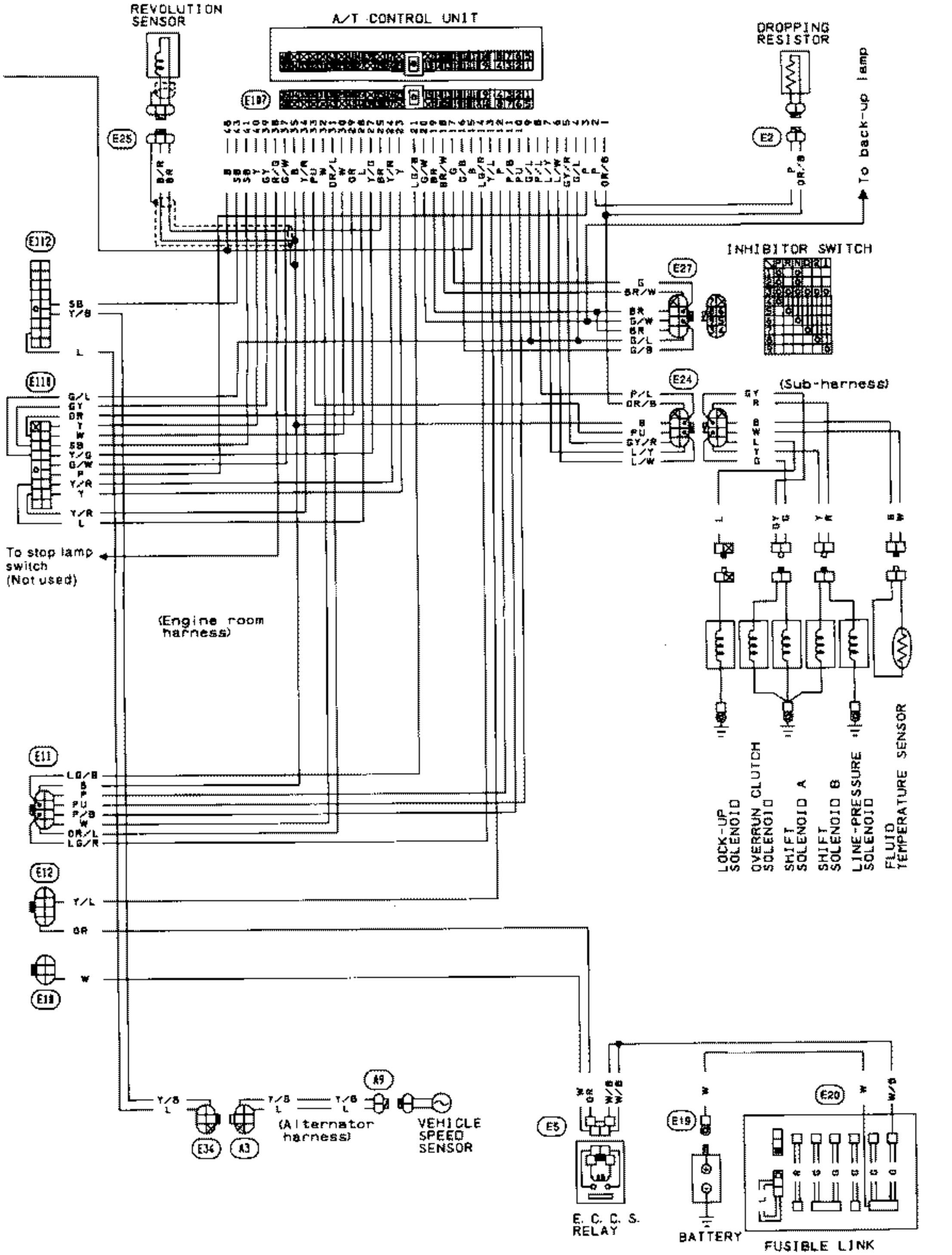

SAT502D

Wiring Diagram (Cont'd)

R.H.D. MODEL

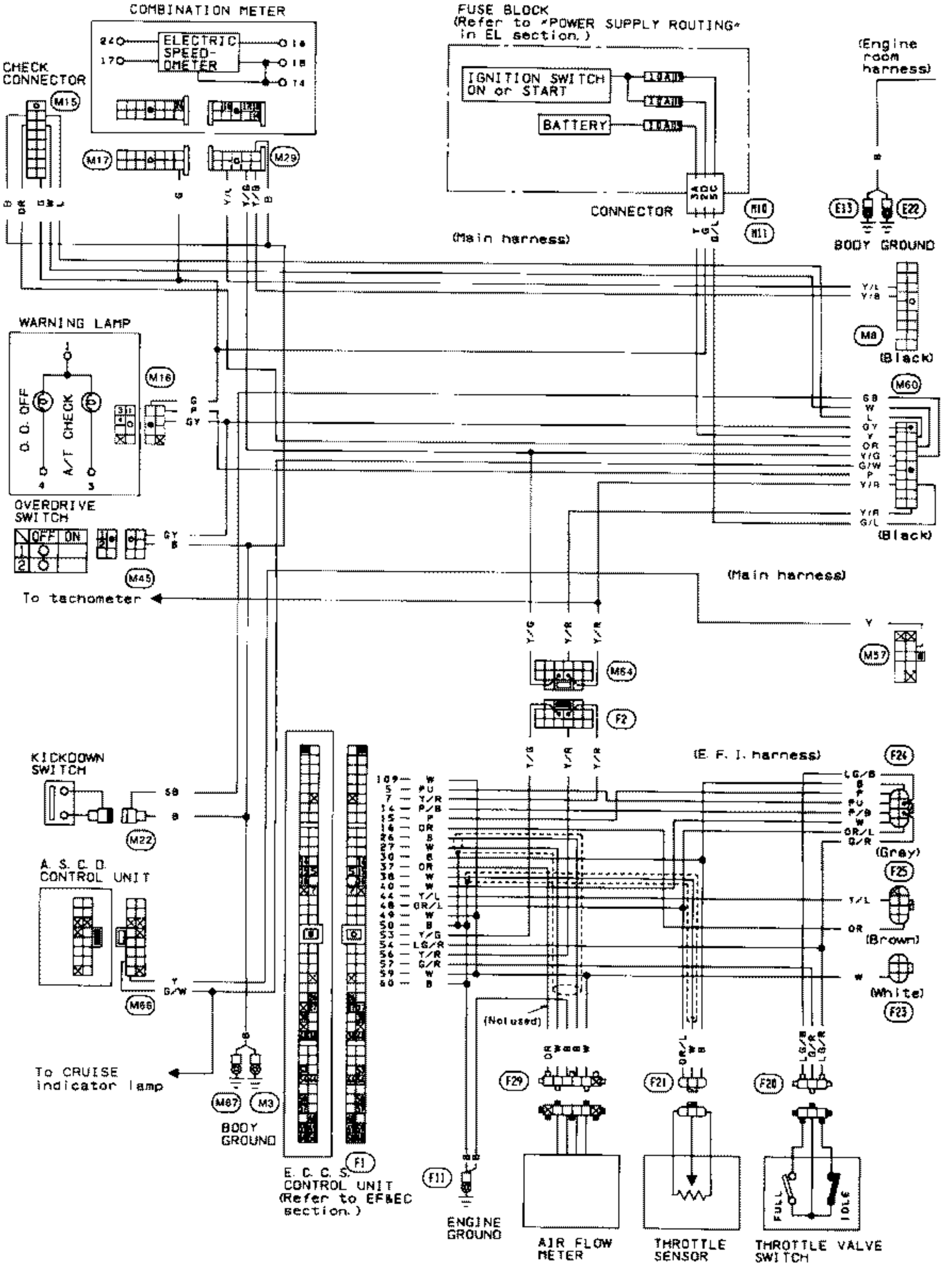

Wiring Diagram (Cont'd)

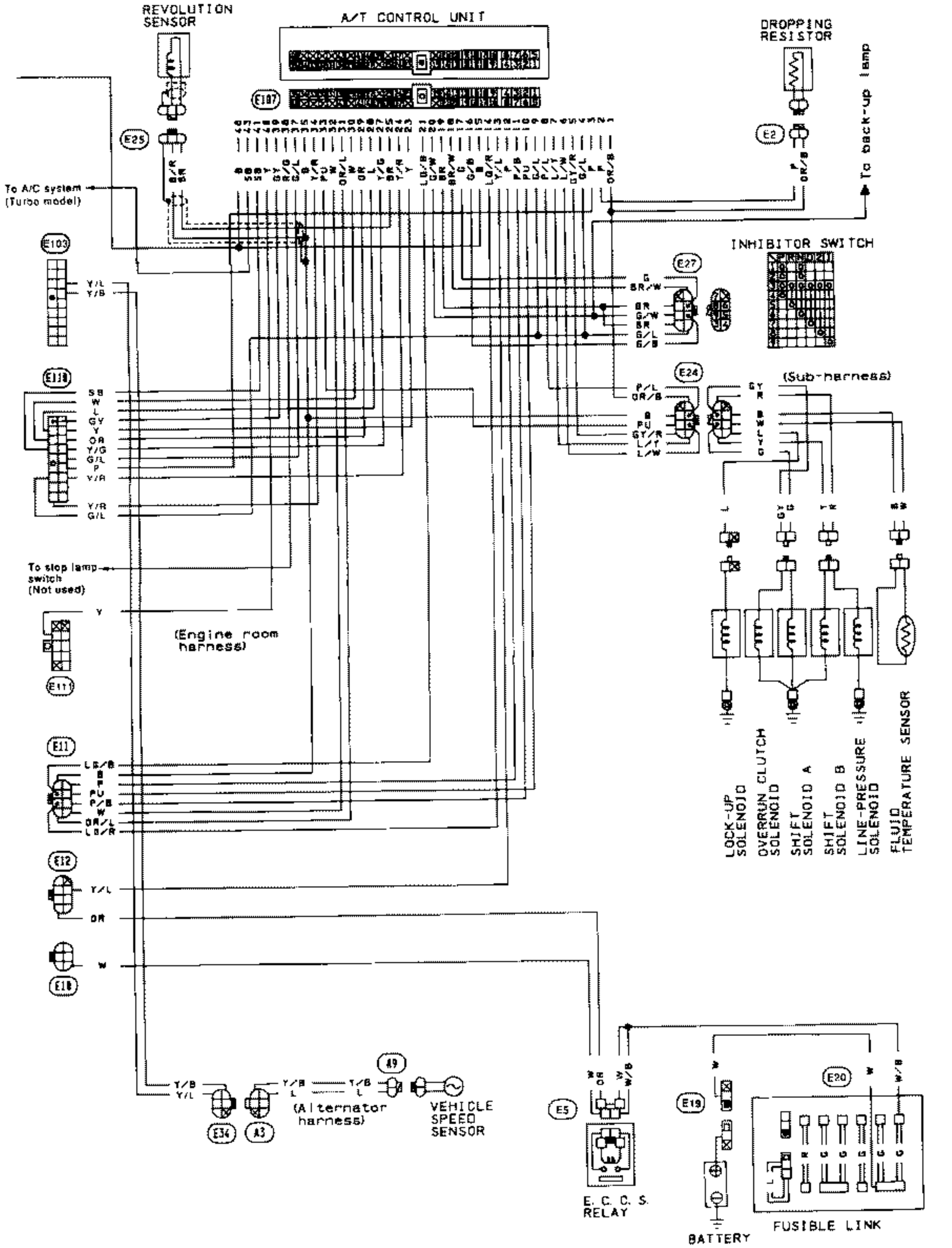

SAT503D

Z.ONE.DATSUN

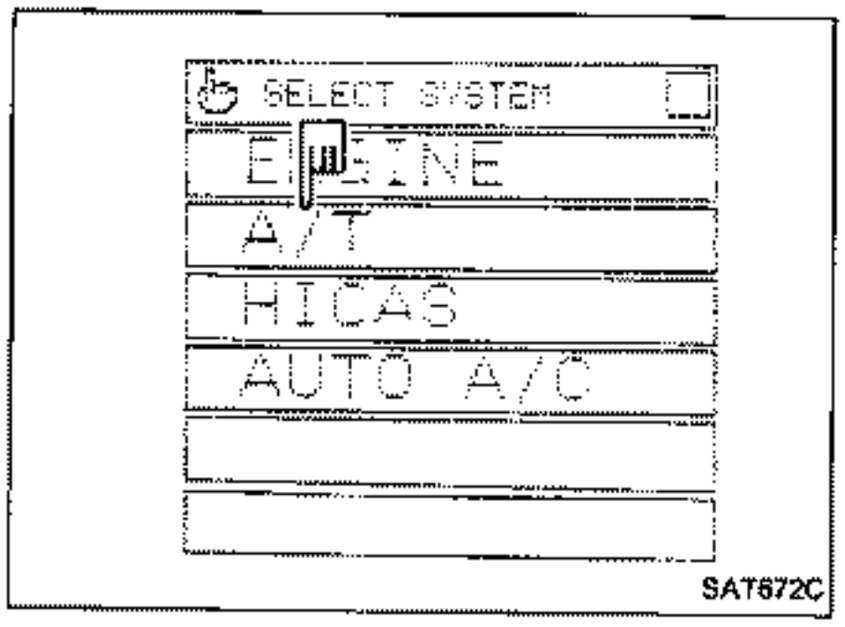

SAT672C

Self-diagnosis

SELF-DIAGNOSTIC PROCEDURE (With CONSULT)

1. Turn on CONSULT.
2. Touch "A/T".

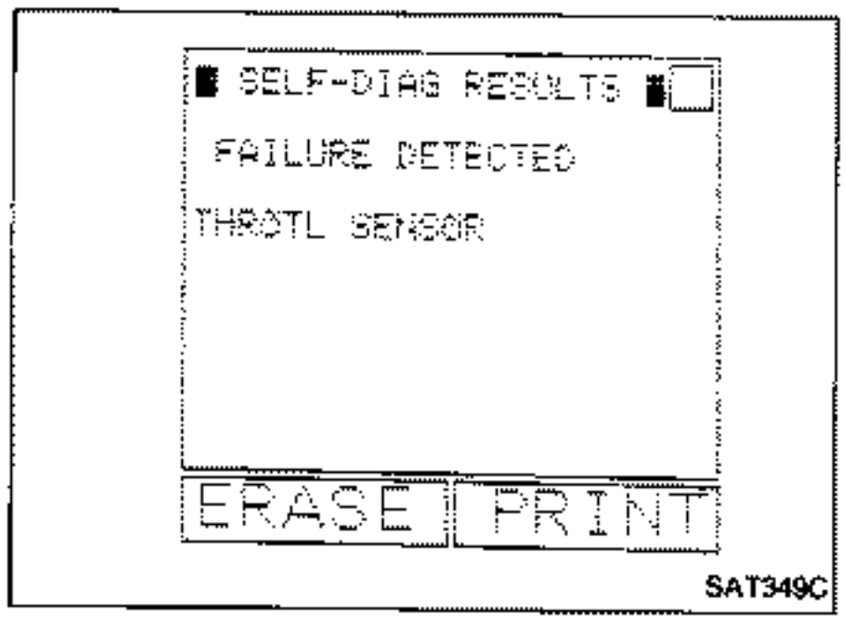

SAT349C

3. Touch "SELF-DIAGNOSIS".
   CONSULT performs REAL-TIME SELF-DIAGNOSIS.

Self-diagnosis (Cont'd)

SELF-DIAGNOSTIC PROCEDURE (Without CONSULT)

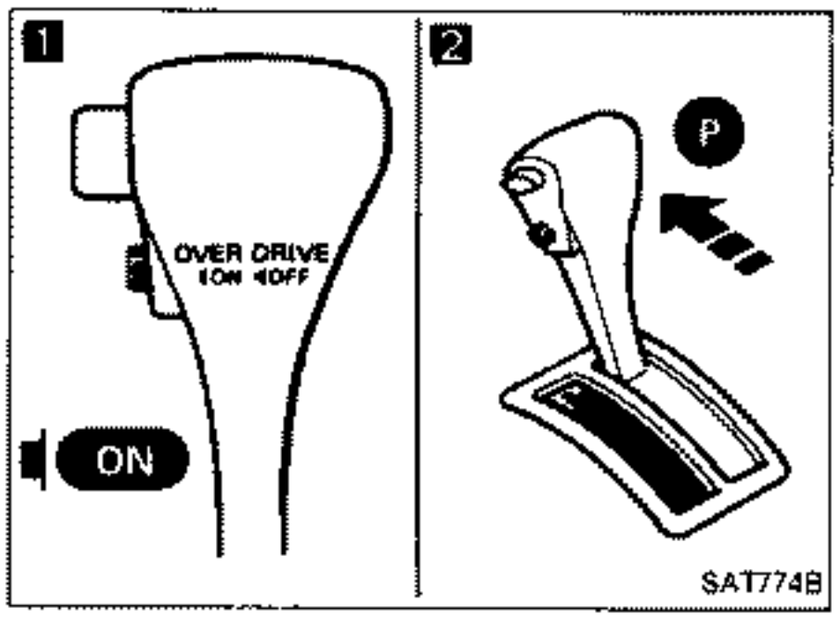

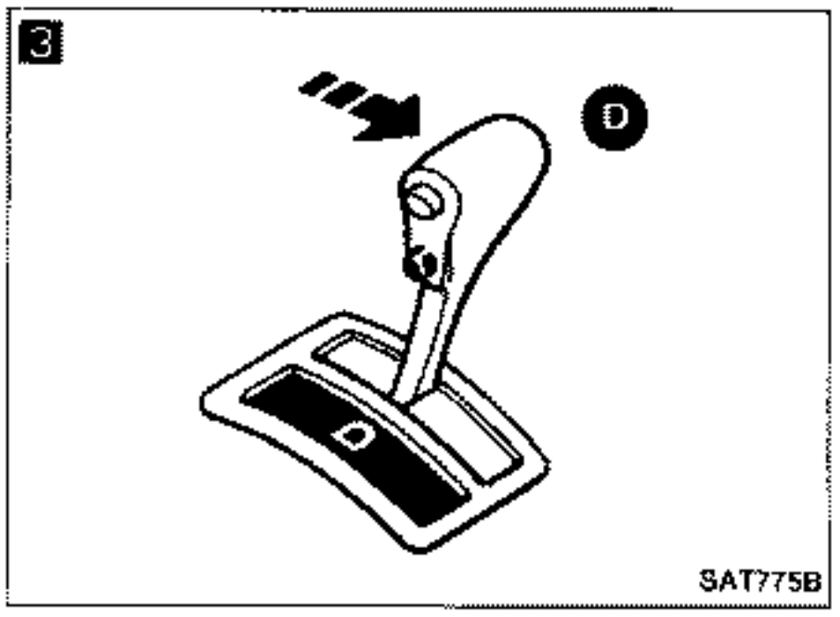

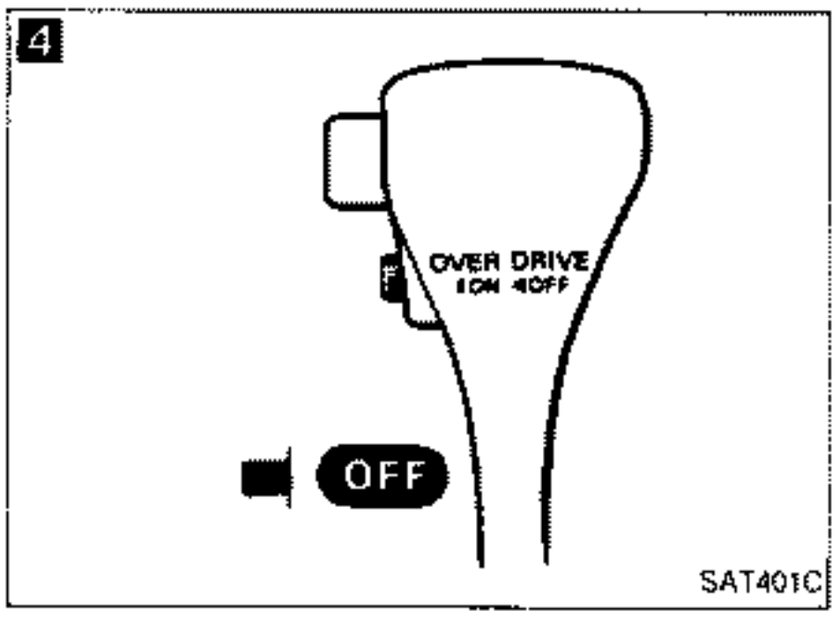

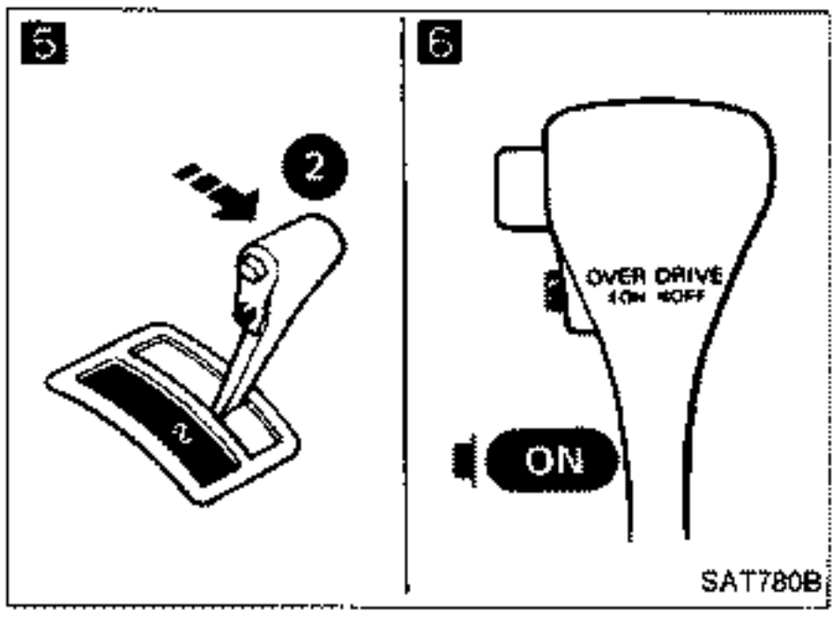

DIAGNOSIS START

↓

Start engine and warm it up to normal engine operating temperature.

↓



↓

1

Set overdrive switch in "ON" position.

↓

2

Move selector lever to "P" range.

↓

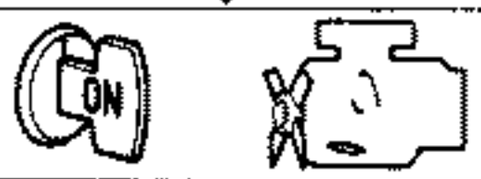

↓

Does A/T check lamp come on for about 2 seconds? — No → Go to Diagnostic Procedure 1.

↓ Yes



↓

3

Move selector lever to "D" range.

↓

4

Set overdrive switch in "OFF" position.

↓



Wait for more than 2 seconds after ignition switch "ON".

↓

5

Move selector lever to "2" range.

↓

6

Set overdrive switch in "ON" position.

↓

Ⓐ

Self-diagnosis (Cont'd)

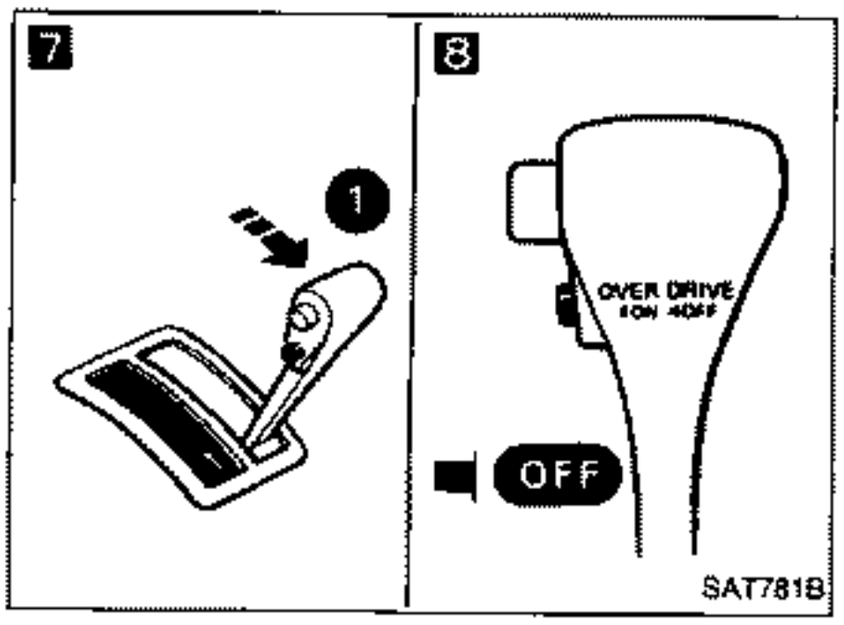

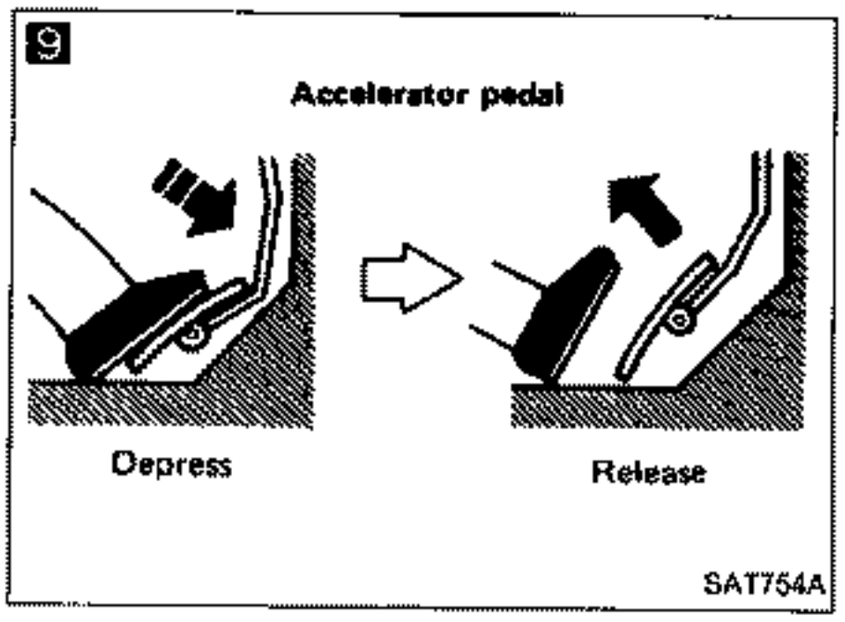

Ⓐ

7 Move selector lever to "1" range.

8 Set overdrive switch in "OFF" position.

9 Depress accelerator pedal fully and release it.

Check A/T check lamp.
Refer to JUDGMENT OF SELF-DIAGNOSIS CODE on next page.

DIAGNOSIS END

Self-diagnosis (Cont'd)

JUDGMENT OF SELF-DIAGNOSIS CODE

A/T check lamp	Damaged circuit
All judgment flickers are same. 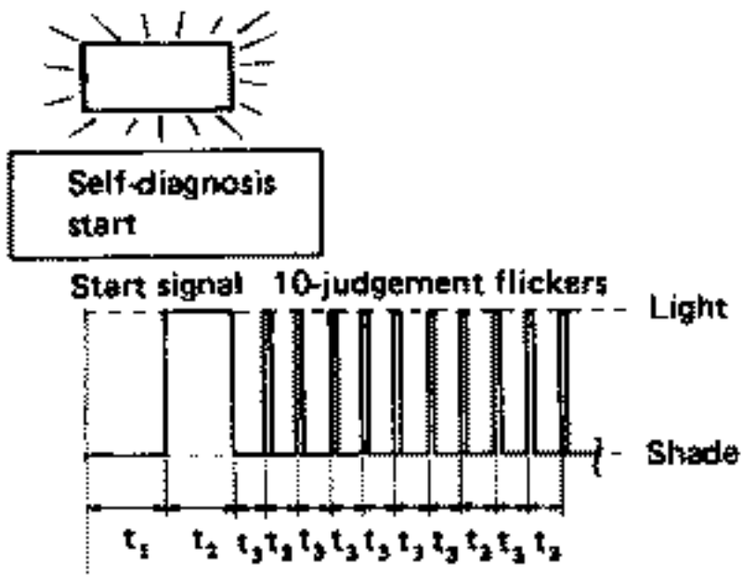 SAT307C	All circuits that can be confirmed by self-diagnosis are O.K.
1st judgment flicker is longer than others. 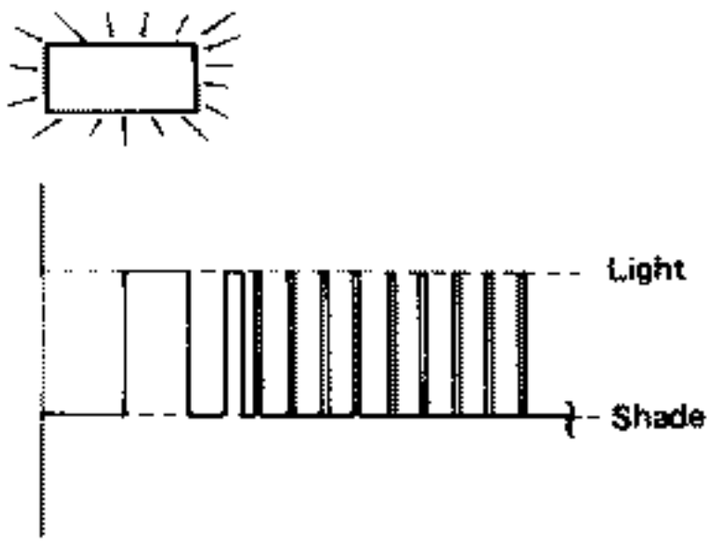 SAT308C	Revolution sensor circuit is short-circuited or disconnected. 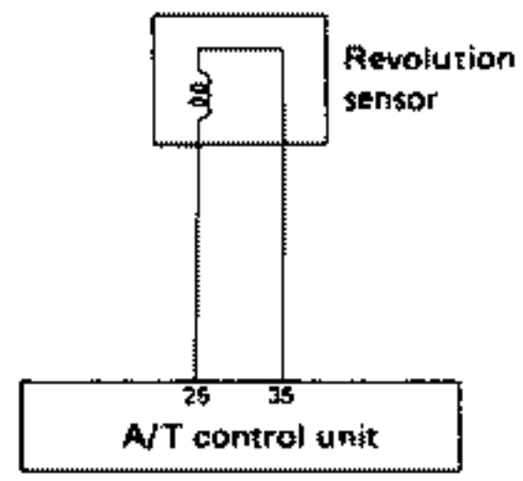 ➡ **Go to revolution sensor circuit check.** SAT965B
2nd judgment flicker is longer than others. 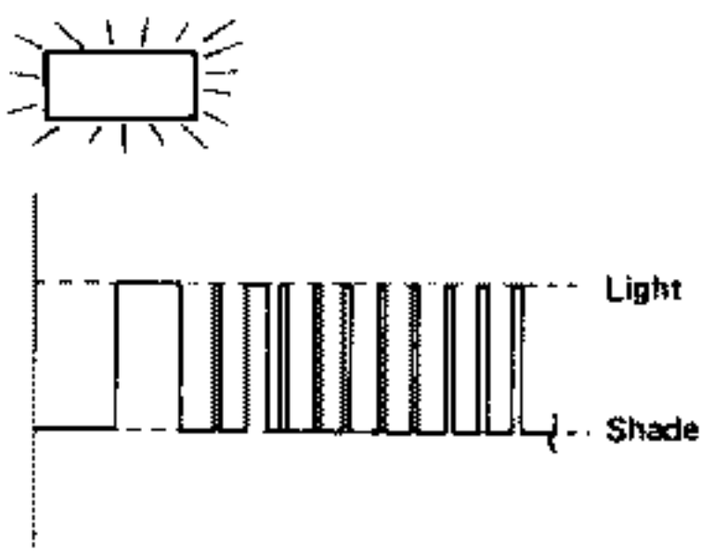 SAT309C	Speed sensor circuit is short-circuited or disconnected. 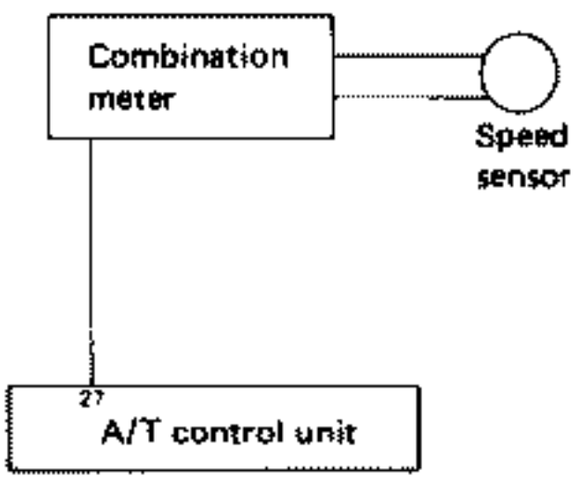 ➡ **Go to speed sensor circuit check.** SAT966B
3rd judgment flicker is longer than others. 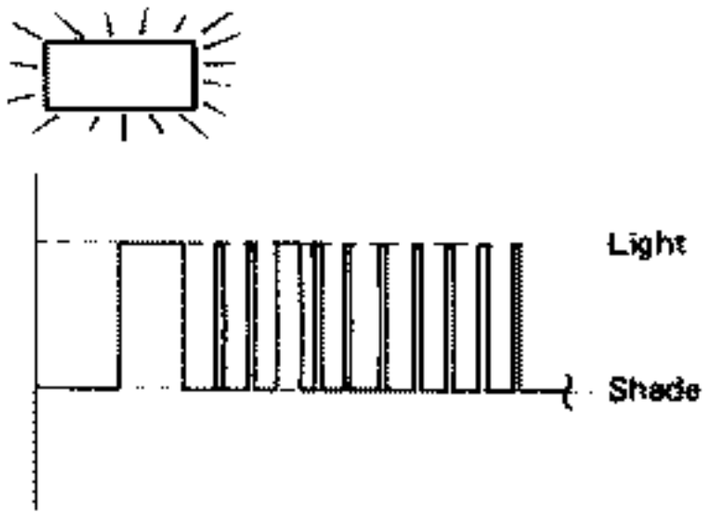 SAT310C	Throttle sensor circuit is short-circuited or disconnected. 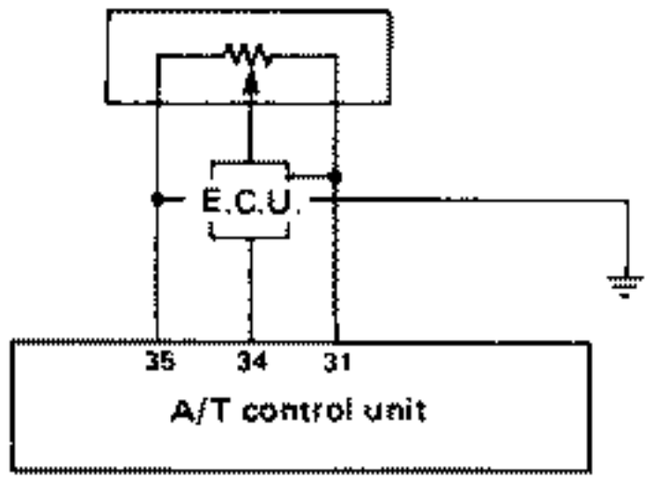 ➡ **Go to throttle sensor circuit check.** SAT967B

t_1 = 2.5 seconds t_2 = 2.0 seconds t_3 = 1.0 second

Self-diagnosis (Cont'd)

A/T check lamp	Damaged circuit
4th judgment flicker is longer than others. 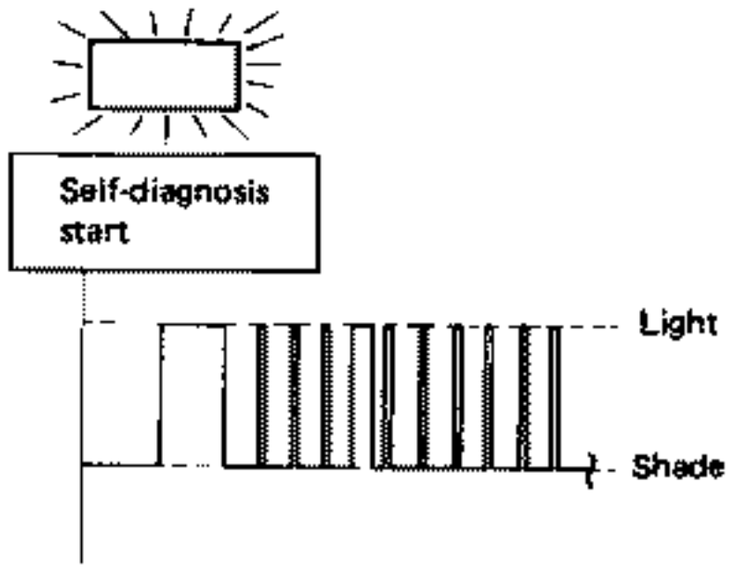 SAT311C	Shift solenoid A circuit is short-circuited or disconnected. 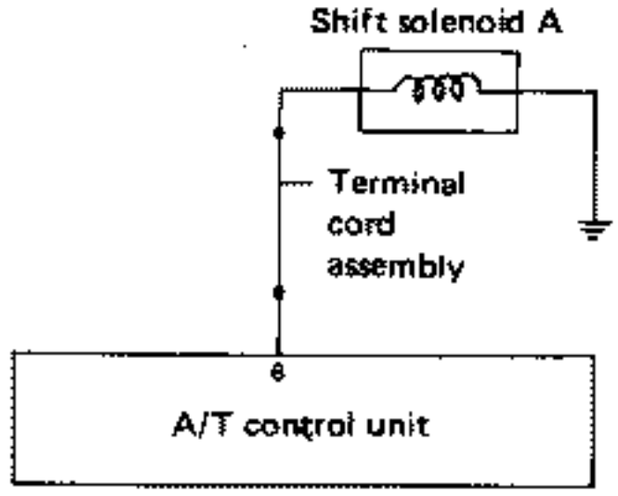 ➡ **Go to shift solenoid A circuit check.** SAT968B
5th judgment flicker is longer than others. 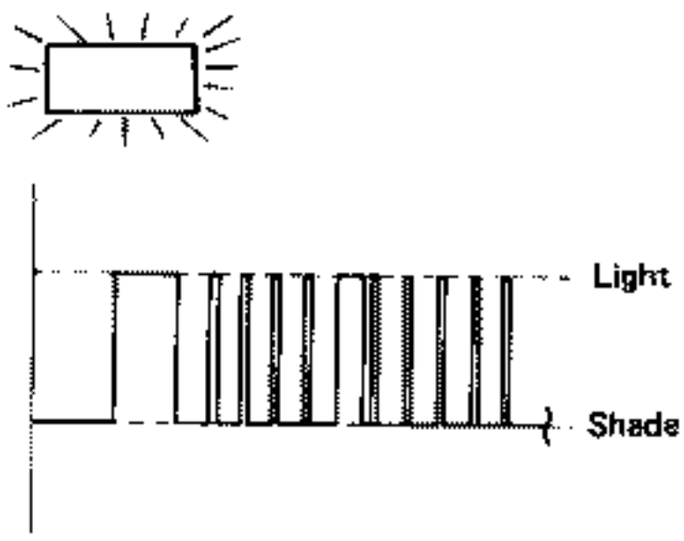 SAT312C	Shift solenoid B circuit is short-circuited or disconnected. 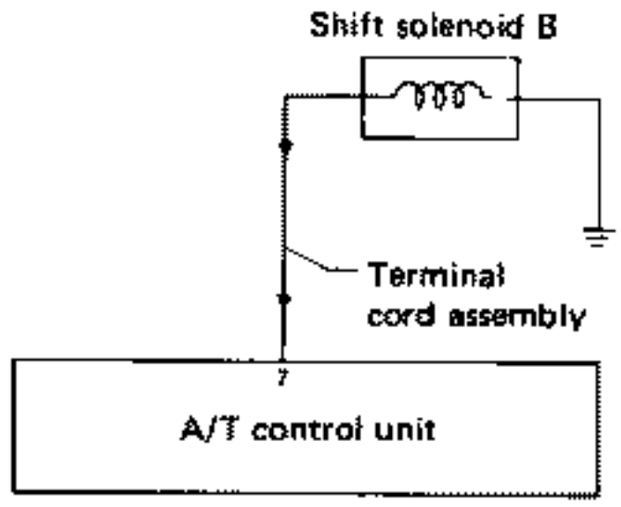 ➡ **Go to shift solenoid B circuit check.** SAT969B
6th judgment flicker is longer than others. 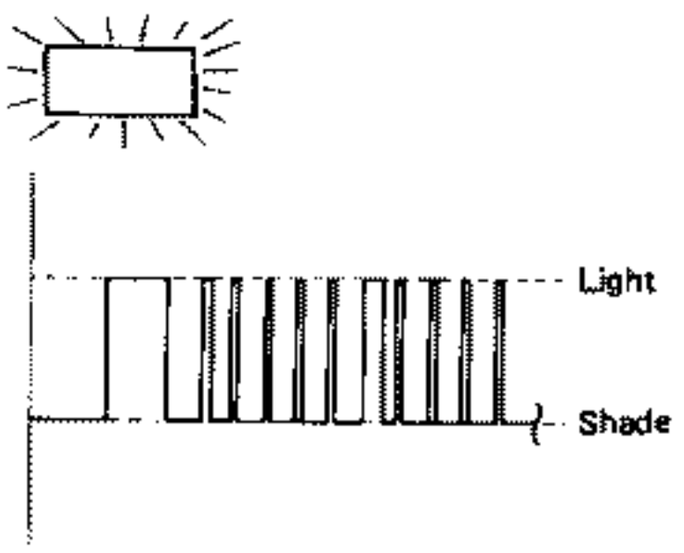 SAT313C	Overrun clutch solenoid circuit is short-circuited or disconnected. 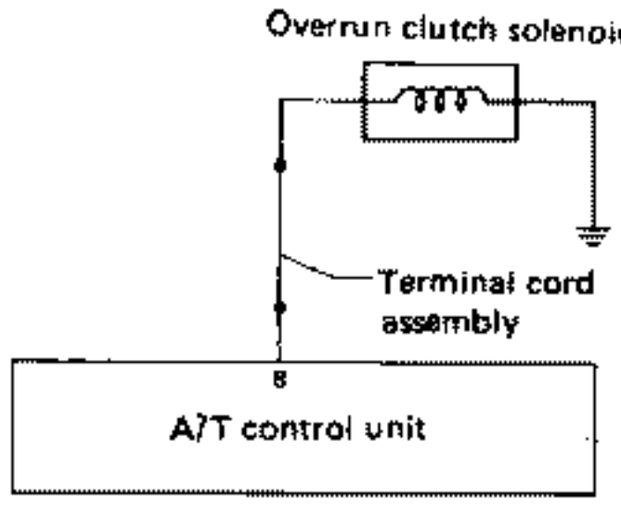 ➡ **Go to overrun clutch solenoid circuit check.** SAT970B
7th judgment flicker is longer than others. 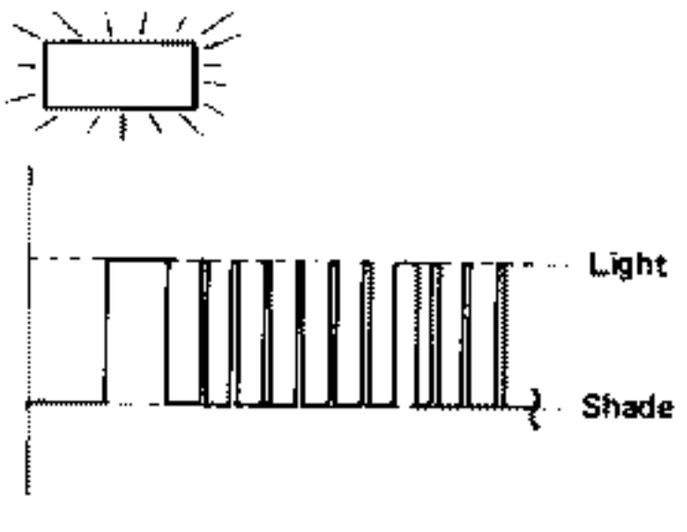 SAT314C	Lock-up solenoid circuit is short-circuited or disconnected. 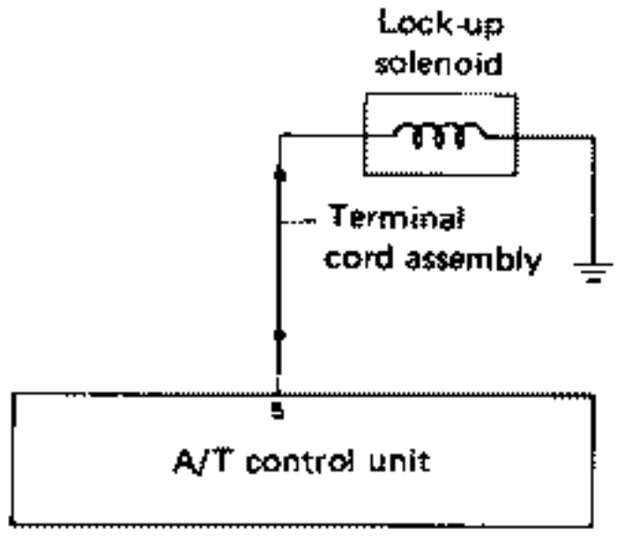 ➡ **Go to lock-up solenoid circuit check.** SAT971B

Self-diagnosis (Cont'd)

A/T check lamp	Damaged circuit
8th judgment flicker is longer than others. 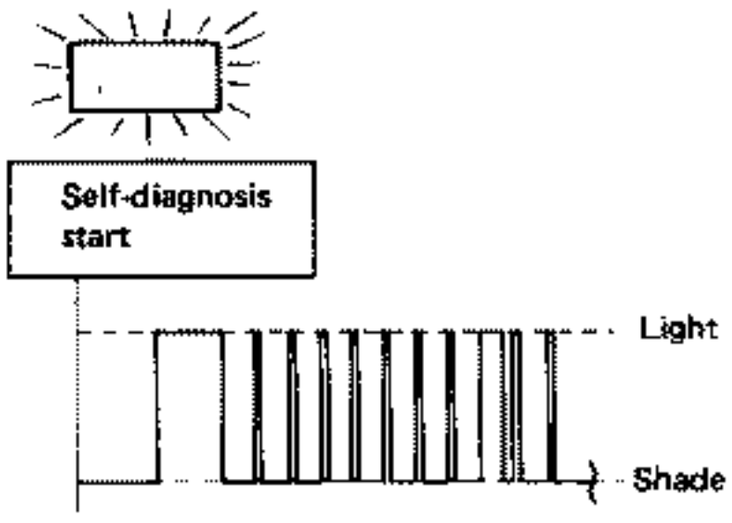 SAT315C	Fluid temperature sensor is disconnected or A/T control unit power source circuit is damaged. 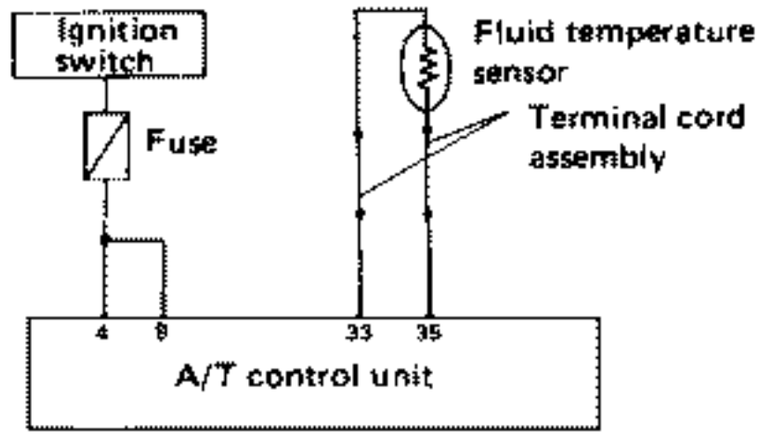 ➡ **Go to fluid temperature sensor and A/T control unit power source circuit check.** SAT972B
9th judgment flicker is longer than others. 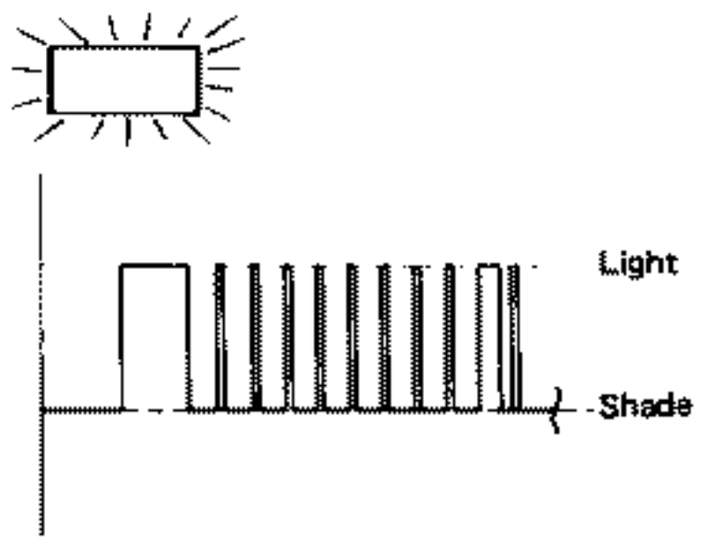 SAT316C	Engine revolution signal circuit is short-circuited or disconnected. 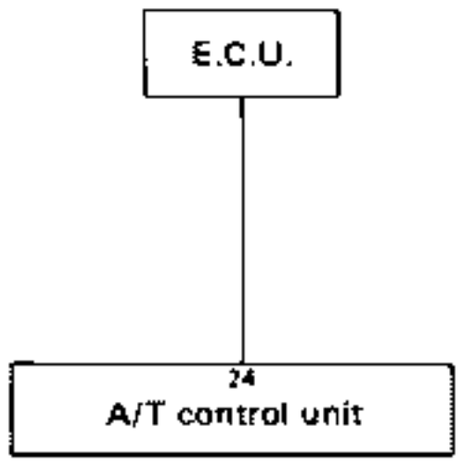 ➡ **Go to engine revolution signal circuit check.** SAT973B
10th judgment flicker is longer than others. 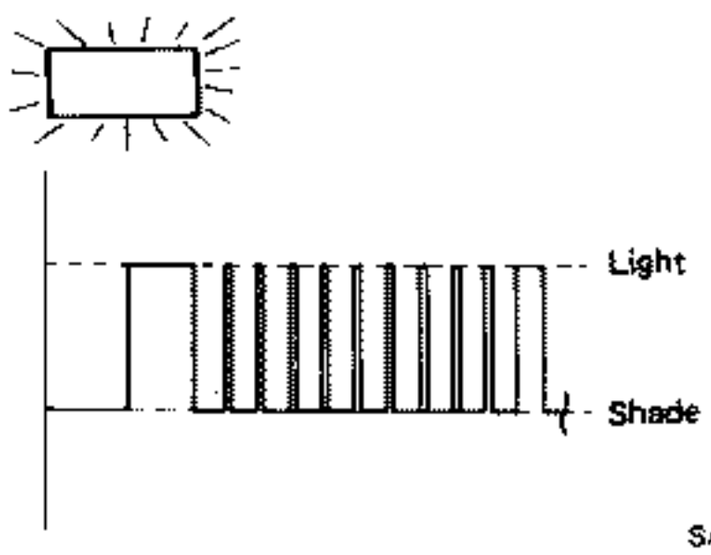 SAT317C	Line pressure solenoid circuit is short-circuited or disconnected. 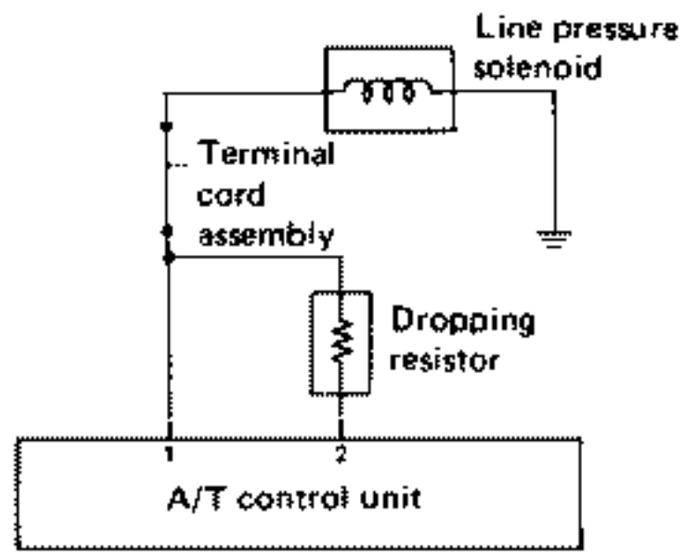 ➡ **Go to line pressure solenoid circuit check.** SAT974B
Flickers as shown below. 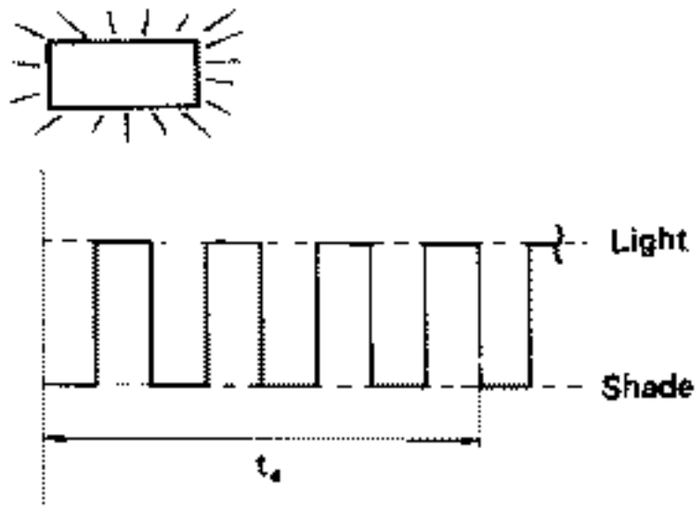 SAT318C	Battery power is low. Battery has been disconnected for a long time. Battery is connected conversely. (When reconnecting A/T control unit connectors. — This is not a problem.)

t_4 = 1.0 second

Self-diagnosis (Cont'd)

A/T check lamp	Damaged circuit
Does not come on.	Inhibitor switch, overdrive switch, kickdown switch or idle switch circuit is disconnected or A/T control unit is damaged.

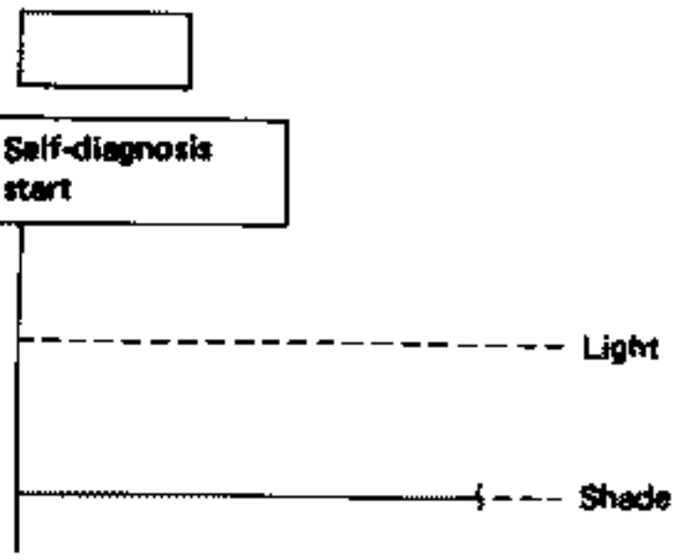

SAT146B

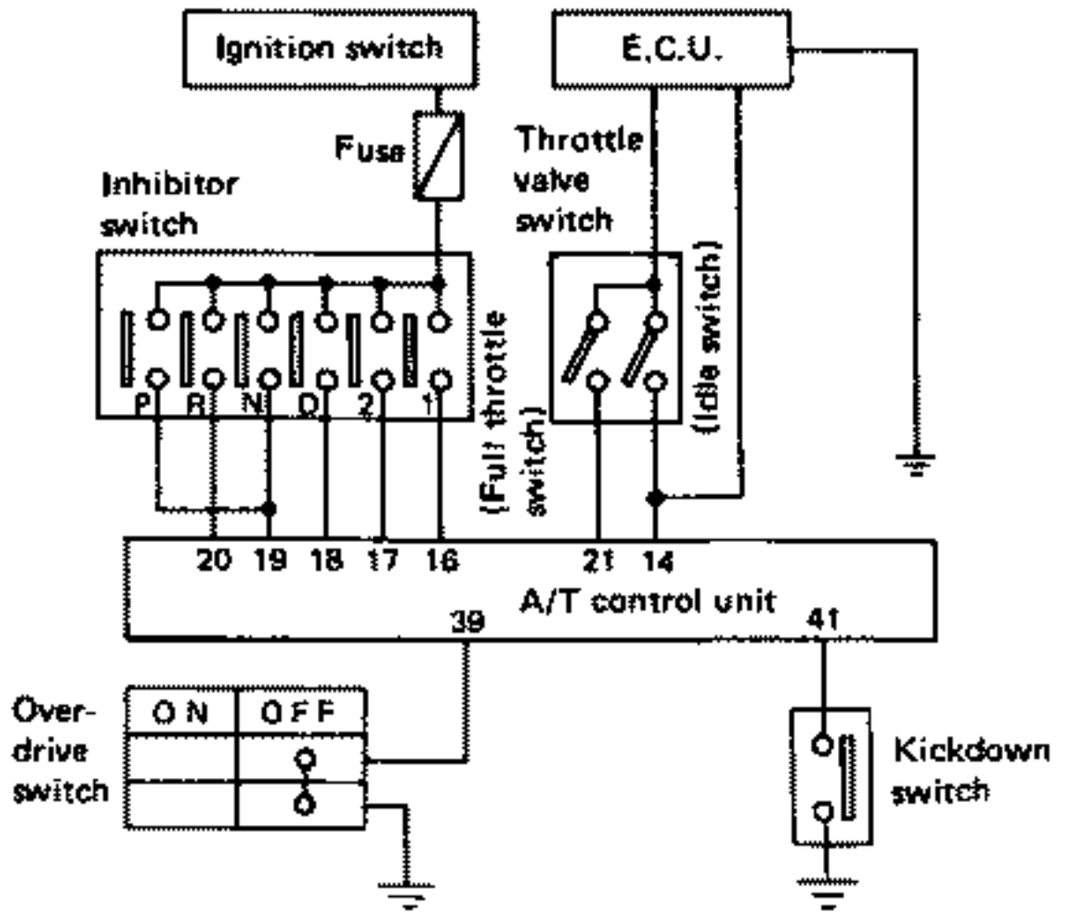

➡ **Go to inhibitor, overdrive, kickdown and idle switch circuit checks.**

SAT319C

Self-diagnosis (Cont'd)

REVOLUTION SENSOR CIRCUIT CHECK

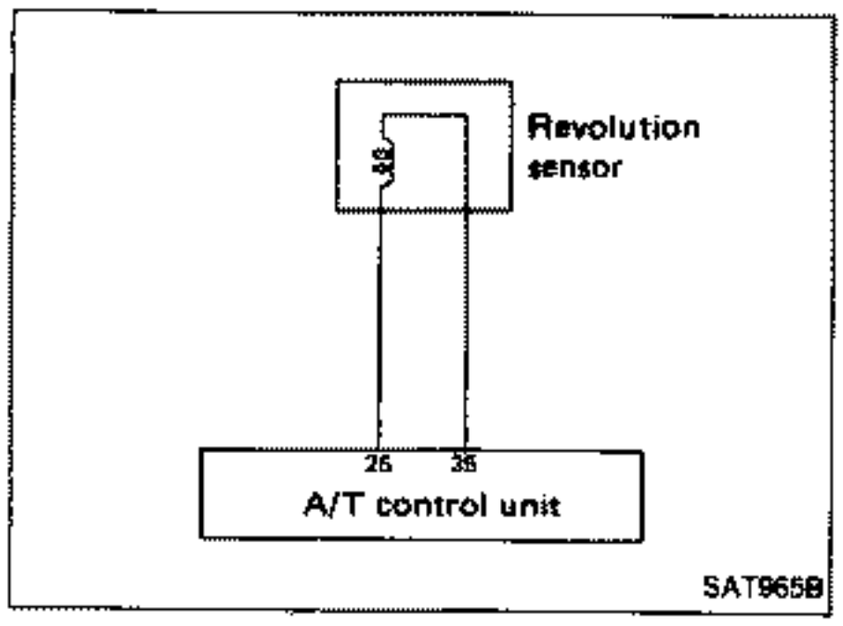

CHECK REVOLUTION SENSOR.
— Refer to "Electrical Components Inspection".

N.G. → Repair or replace revolution sensor.

O.K. ↓

A

CHECK INPUT SIGNAL.

N.G. → Check harness continuity between A/T control unit and revolution sensor.

1.

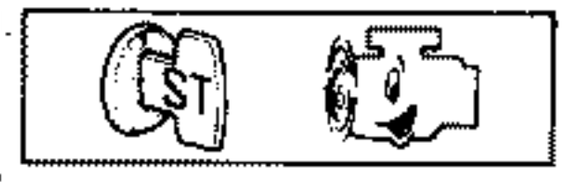

2.

- Select "E.C.U. INPUT SIGNALS".
- Read out the value of "CAR SPEED SENSOR 1" while driving.
- Check the value changes according to driving speed.

OR

Check voltage between A/T control unit terminal (25) and ground while driving.
(Measure with A.C. range.)

Voltage:

At 0 km/h (0 MPH):
0V

At 30 km/h (19 MPH):
1V or more

(Voltage rises gradually in response to vehicle speed.)

O.K. ↓

Perform self-diagnosis again after driving for a while.

N.G. →
1. Perform A/T control unit input/output signal inspection.
2. If N.G., recheck A/T control unit pin terminals for damage or connection of A/T control unit harness connector.

O.K. ↓

INSPECTION END

A



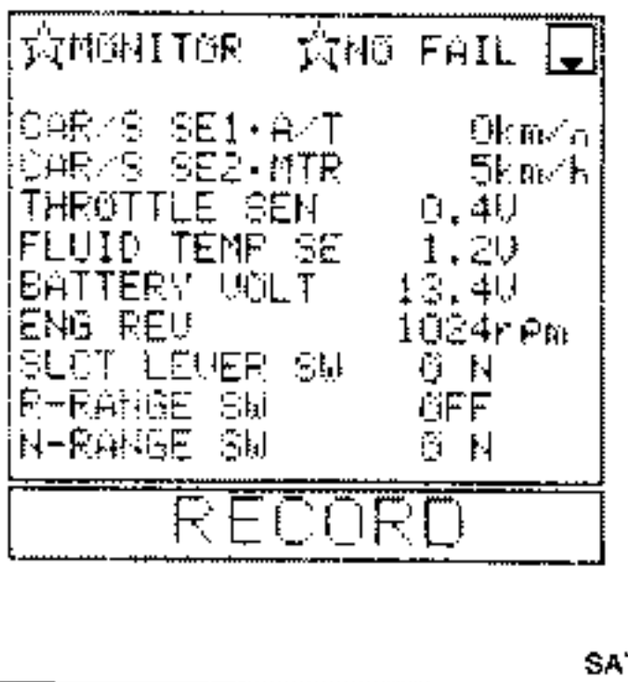

A



Self-diagnosis (Cont'd)

SPEED SENSOR CIRCUIT CHECK

A



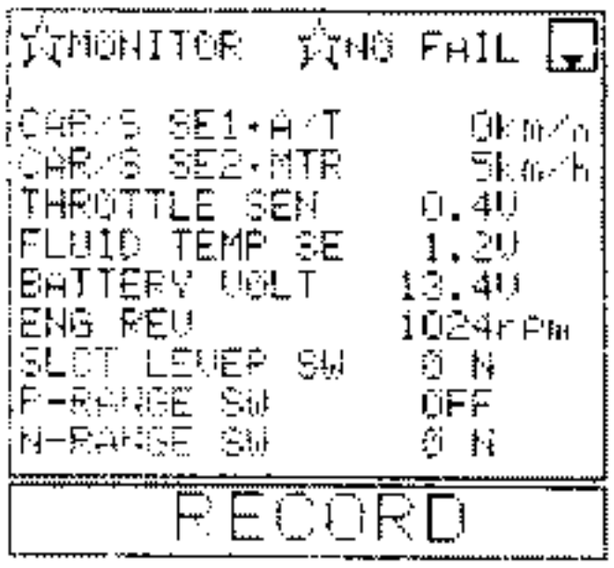

SAT320C

A

CHECK INPUT SIGNAL.

1.

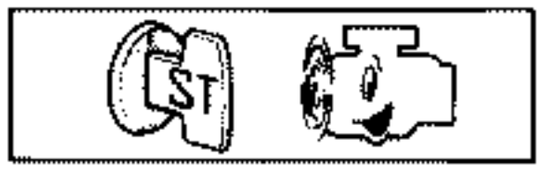

2.

- Select "E.C.U. INPUT SIGNALS".
- Read out the value of "CAR SPEED SENSOR 2" while driving.
- Check the value changes according to driving speed.

OR

- Check voltage between A/T control unit terminal ㉗ and ground while driving at 2 to 3 km/h (1 to 2 MPH) for 1 m (3 ft) or more.
  Voltage: Varies from 0V to 5V

N.G. → Check the following items.
- Speed sensor and ground circuit for speed sensor — Refer to section EL.
- Harness continuity between A/T control unit and speed sensor

O.K.

Perform self-diagnosis again after driving for a while.

N.G. → 1. Perform A/T control unit input/output signal inspection.
2. If N.G., recheck A/T control unit pin terminals for damage or connection of A/T control unit harness connector.

O.K.

INSPECTION END

A

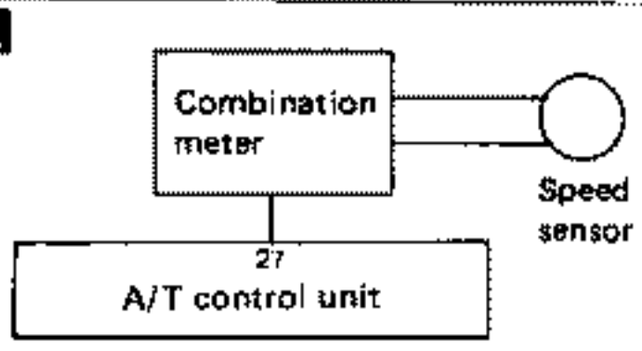



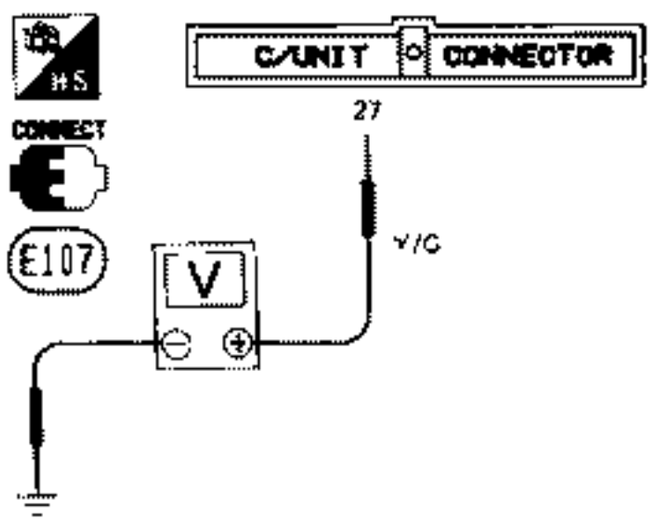

SAT977B

Self-diagnosis (Cont'd)

THROTTLE SENSOR CIRCUIT CHECK

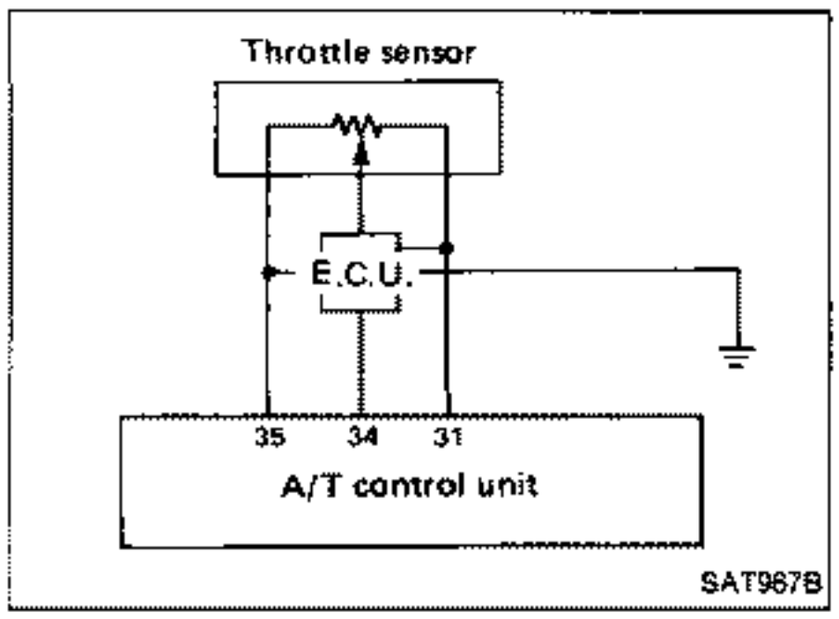

Perform self-diagnosis (Mode III) for engine control. — N.G. → Check throttle sensor circuit for engine control. — Refer to section EF & EC.

O.K. ↓

A

CHECK INPUT SIGNAL.

1.

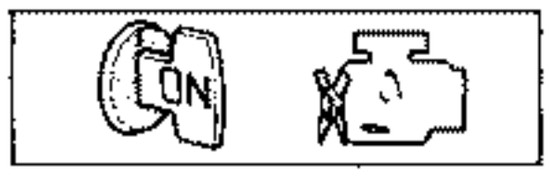

2.

- Select "E.C.U. INPUT SIGNALS".
- Read out the value of "THROTTLE SENSOR".

Voltage:

Fully-closed throttle:
Approximately 0.5V

Fully-open throttle:
Approximately 4V

OR

- Check voltage between A/T control unit terminals ㉞ and ㉟ while accelerator pedal is depressed slowly.

Voltage:

Fully-closed throttle:
Approximately 0.5V

Fully-open throttle:
Approximately 4V

(Voltage rises gradually in response to throttle valve opening.)

N.G. → Check harness continuity between E.C.U. and A/T control unit regarding throttle sensor circuit.

A



Depress slowly.

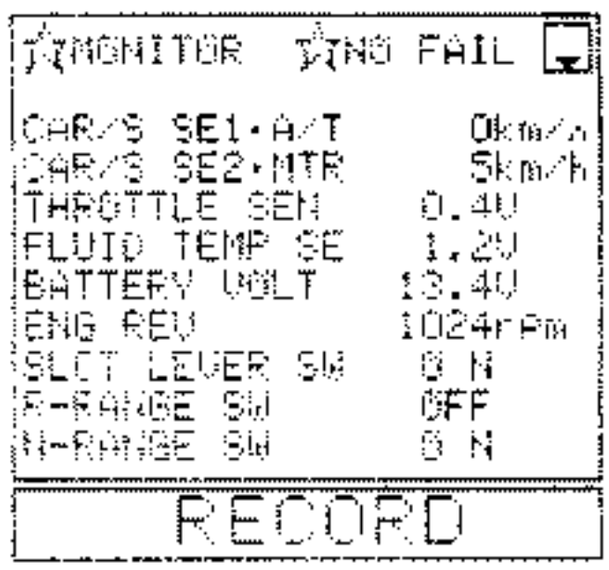

SAT321C

A



Depress slowly.

Perform self-diagnosis again after driving for a while. — N.G. → 1. Perform A/T control unit input/output signal inspection. 2. If N.G., recheck A/T control unit pin terminals for damage or connection of A/T control unit harness connector.

O.K. ↓

O.K. ↓

INSPECTION END

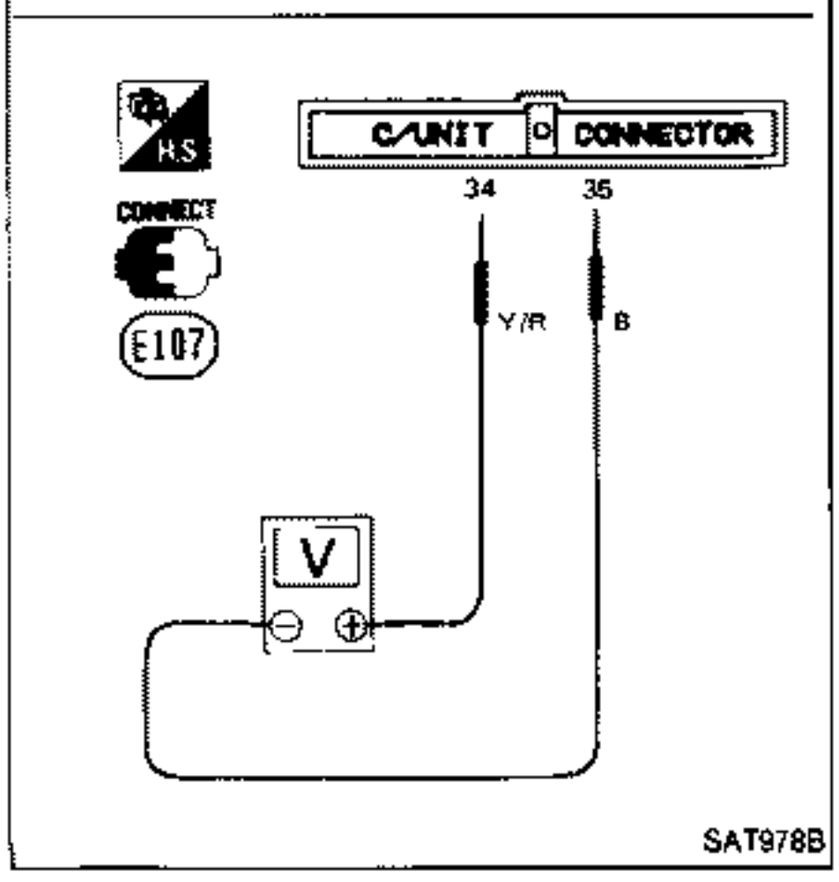

Self-diagnosis (Cont'd)

SHIFT SOLENOID A CIRCUIT CHECK

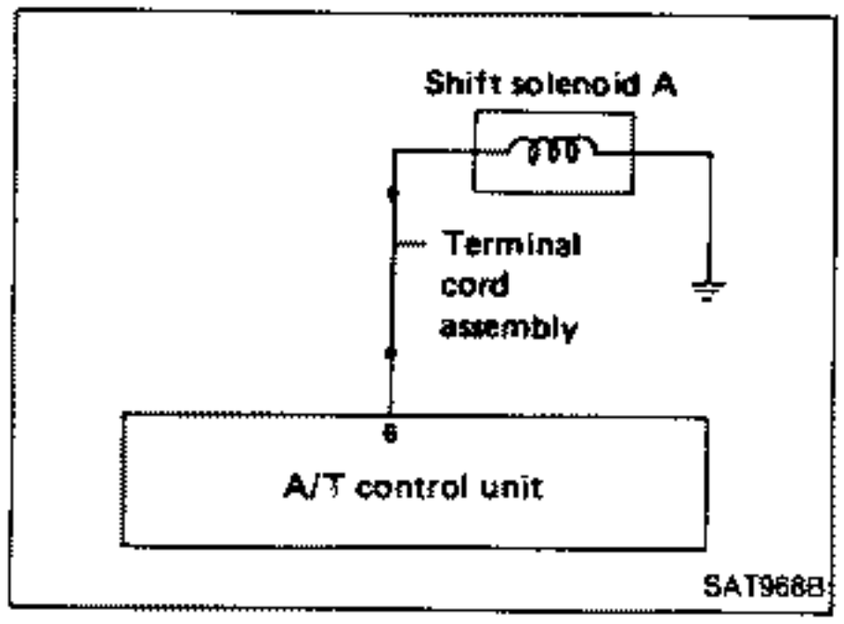

A

CHECK GROUND CIRCUIT.

1. 

2. Disconnect terminal cord assembly connector in engine compartment.
3. Check resistance between terminal ⑥ and ground.
   Resistance: 20 - 40Ω

N.G. →
1. Remove control valve assembly. — Refer to "ON-VEHICLE SERVICE".
2. Check the following items.
- Shift solenoid A — Refer to "Electrical Components Inspection".
- Harness continuity of terminal cord assembly

O.K. ↓

B

CHECK POWER SOURCE CIRCUIT.

1. 

2. Disconnect A/T control unit connector.
3. Check resistance between terminal ⑥ and A/T control unit terminal ⑥.
   Resistance:
   Approximately 0Ω
4. Reinstall any part removed.

N.G. → Repair or replace harness between A/T control unit and terminal cord assembly.

O.K. ↓

Perform self-diagnosis after driving for a while.

N.G. →
1. Perform A/T control unit input/output signal inspection.
2. If N.G., recheck A/T control unit pin terminals for damage or connection of A/T control unit harness connector.

O.K. ↓

INSPECTION END

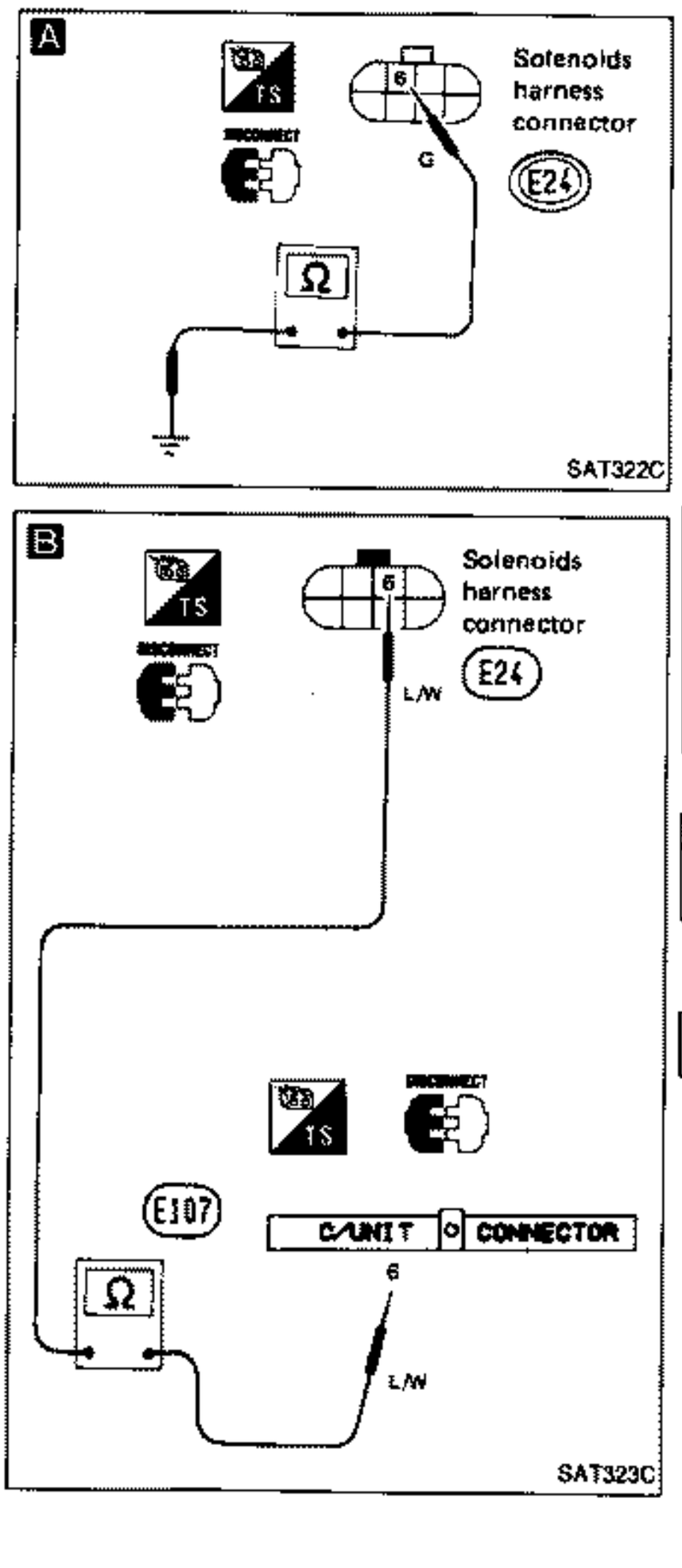

Self-diagnosis (Cont'd)

SHIFT SOLENOID B CIRCUIT CHECK

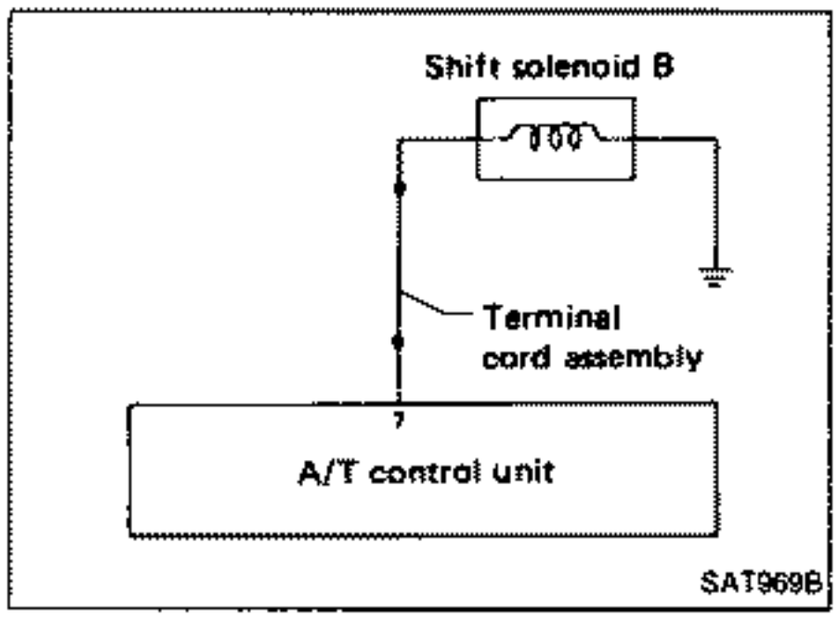

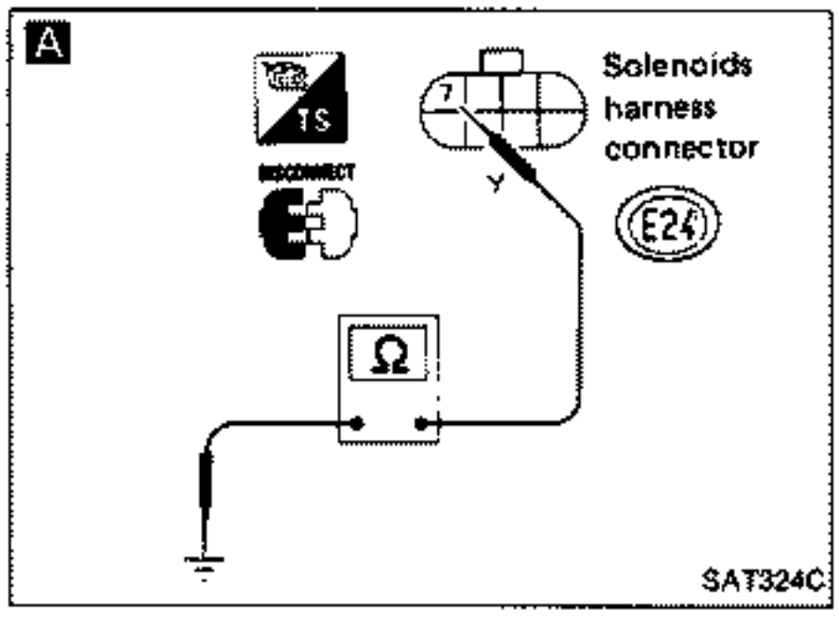

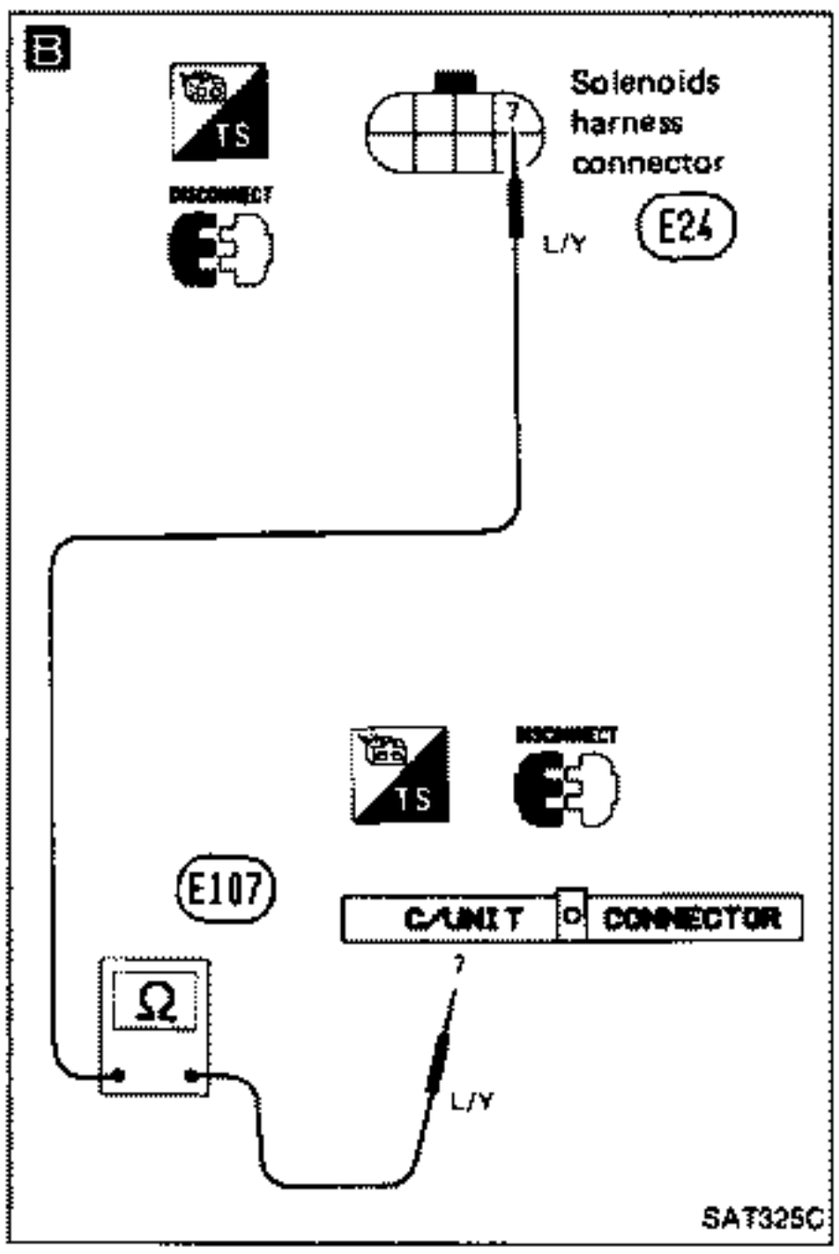

A

CHECK GROUND CIRCUIT.

1. 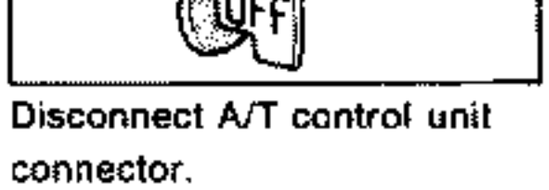

2. Disconnect terminal cord assembly connector in engine compartment.
3. Check resistance between terminal ⑦ and ground.
   Resistance: 20 - 40Ω

N.G. →
1. Remove control valve assembly. — Refer to "ON-VEHICLE SERVICE".
2. Check the following items.
- Shift solenoid B — Refer to "Electrical Components Inspection".
- Harness continuity of terminal cord assembly

O.K. ↓

B

CHECK POWER SOURCE CIRCUIT.

1. 

2. Disconnect A/T control unit connector.
3. Check resistance between terminal ⑦ and A/T control unit terminal ⑦.
   Resistance:
   Approximately 0Ω
4. Reinstall any part removed.

N.G. → Repair or replace harness between A/T control unit and terminal cord assembly.

O.K. ↓

Perform self-diagnosis after driving for a while.

N.G. →
1. Perform A/T control unit input/output signal inspection.
2. If N.G., recheck A/T control unit pin terminals for damage or connection of A/T control unit harness connector.

O.K. ↓

INSPECTION END

Self-diagnosis (Cont'd)

OVERRUN CLUTCH SOLENOID CIRCUIT CHECK

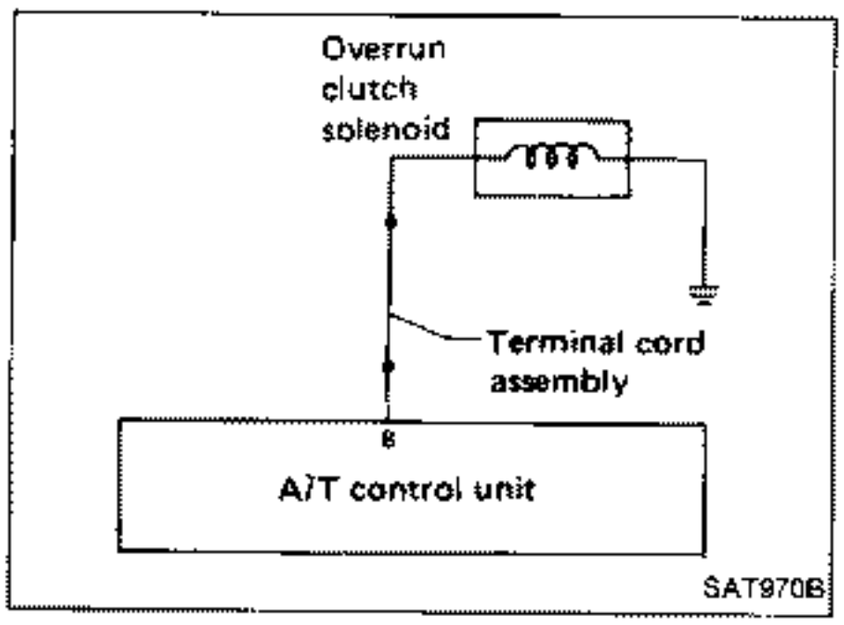

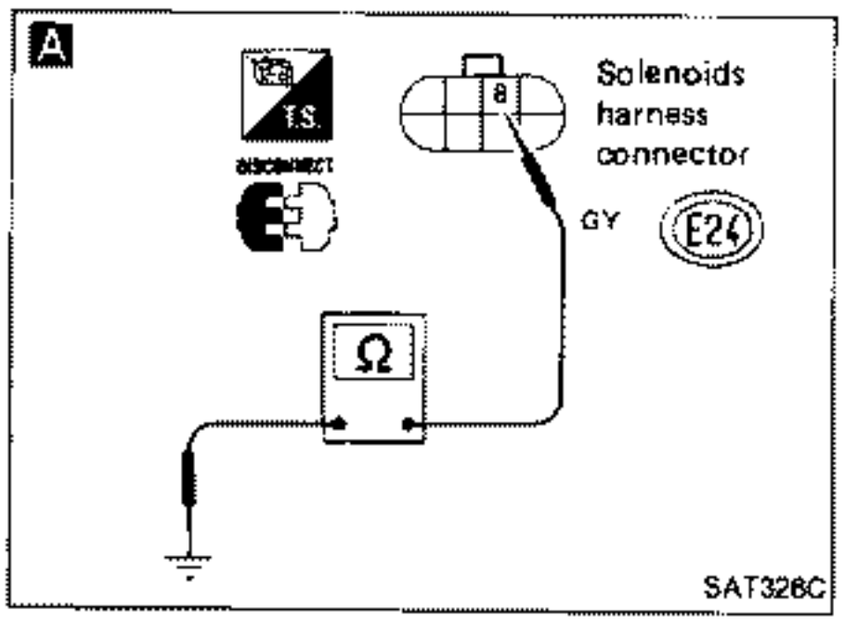

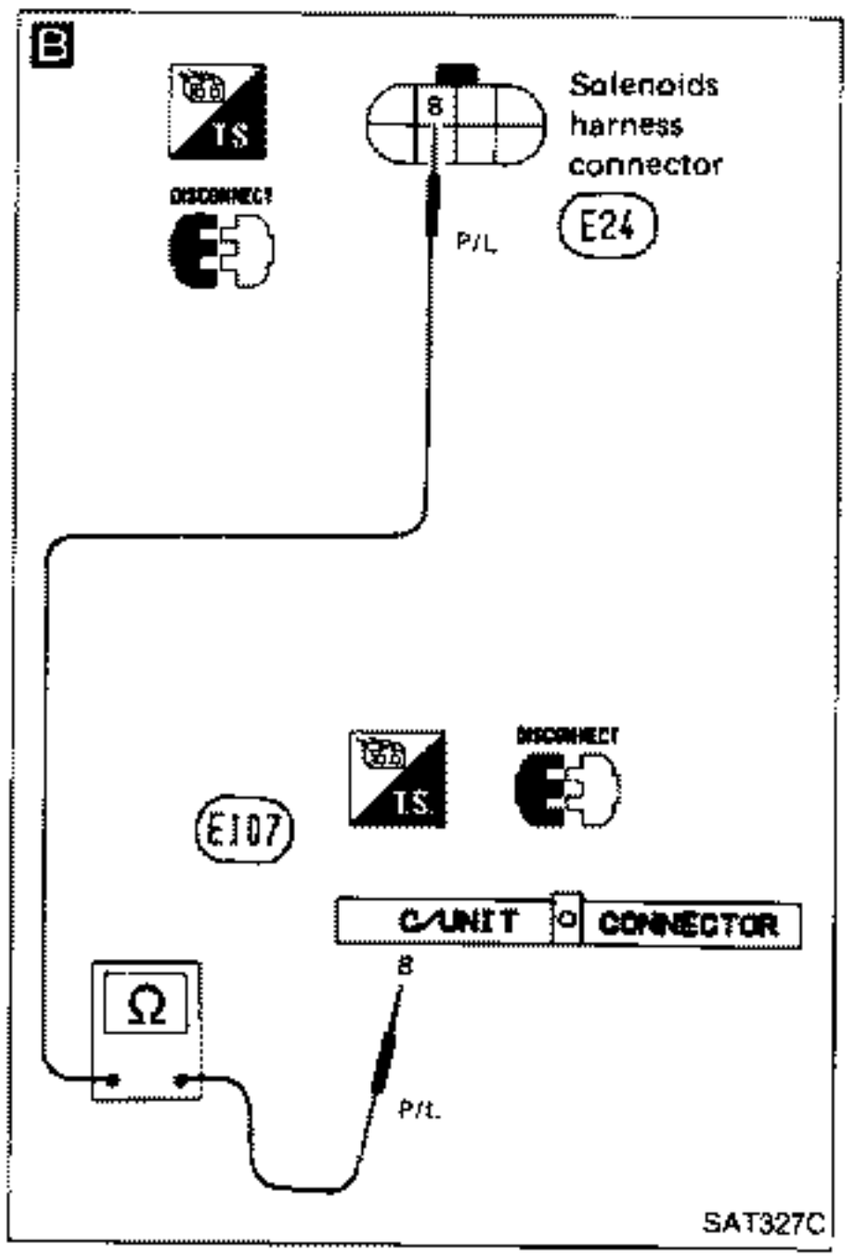

A

CHECK GROUND CIRCUIT.

1. 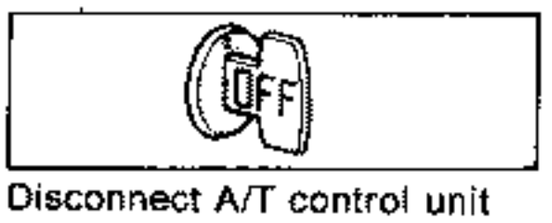

2. Disconnect terminal cord assembly connector in engine compartment.
3. Check resistance between terminal ⑧ and ground.
   Resistance: 20 - 40Ω

N.G. →
1. Remove control valve assembly. — Refer to "ON-VEHICLE SERVICE".
2. Check the following items.
- Overrun clutch solenoid. — Refer to "Electrical Components Inspection".
- Harness continuity of terminal cord assembly

O.K. ↓

B

CHECK POWER SOURCE CIRCUIT.

1.

2. Disconnect A/T control unit connector.
3. Check resistance between terminal ⑥ and A/T control unit terminal ⑧.
   Resistance:
   Approximately 0Ω
4. Reinstall any part removed.

N.G. → Repair or replace harness between A/T control unit and terminal cord assembly.

O.K. ↓

Perform self-diagnosis after driving for a while.

N.G. →
1. Perform A/T control unit input/output signal inspection.
2. If N.G., recheck A/T control unit pin terminals for damage or connection of A/T control unit harness connector.

O.K. ↓

INSPECTION END

Self-diagnosis (Cont'd)

LOCK-UP SOLENOID CIRCUIT CHECK

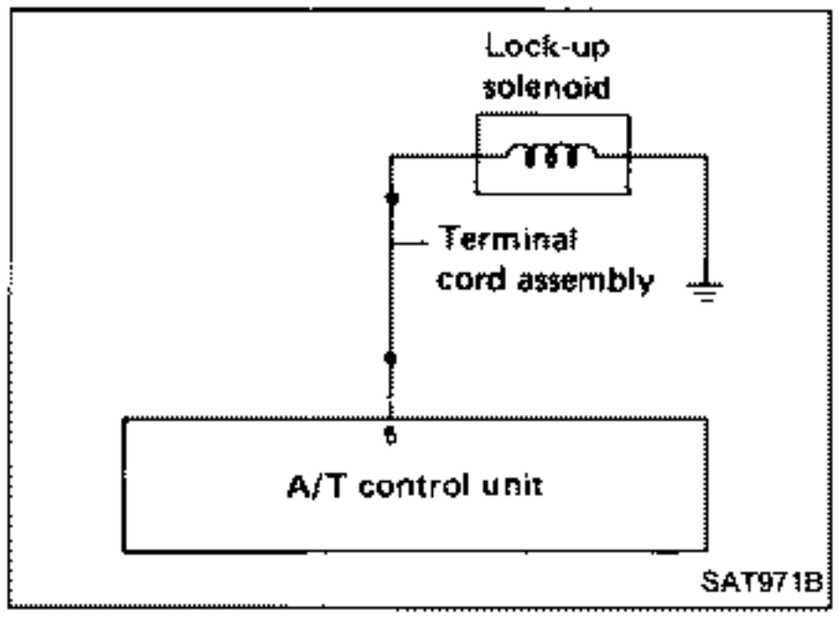

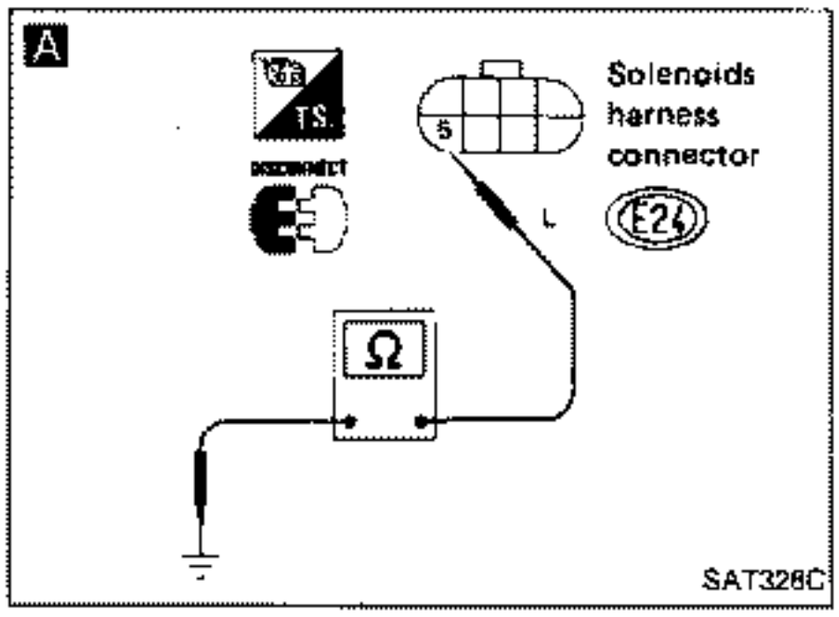

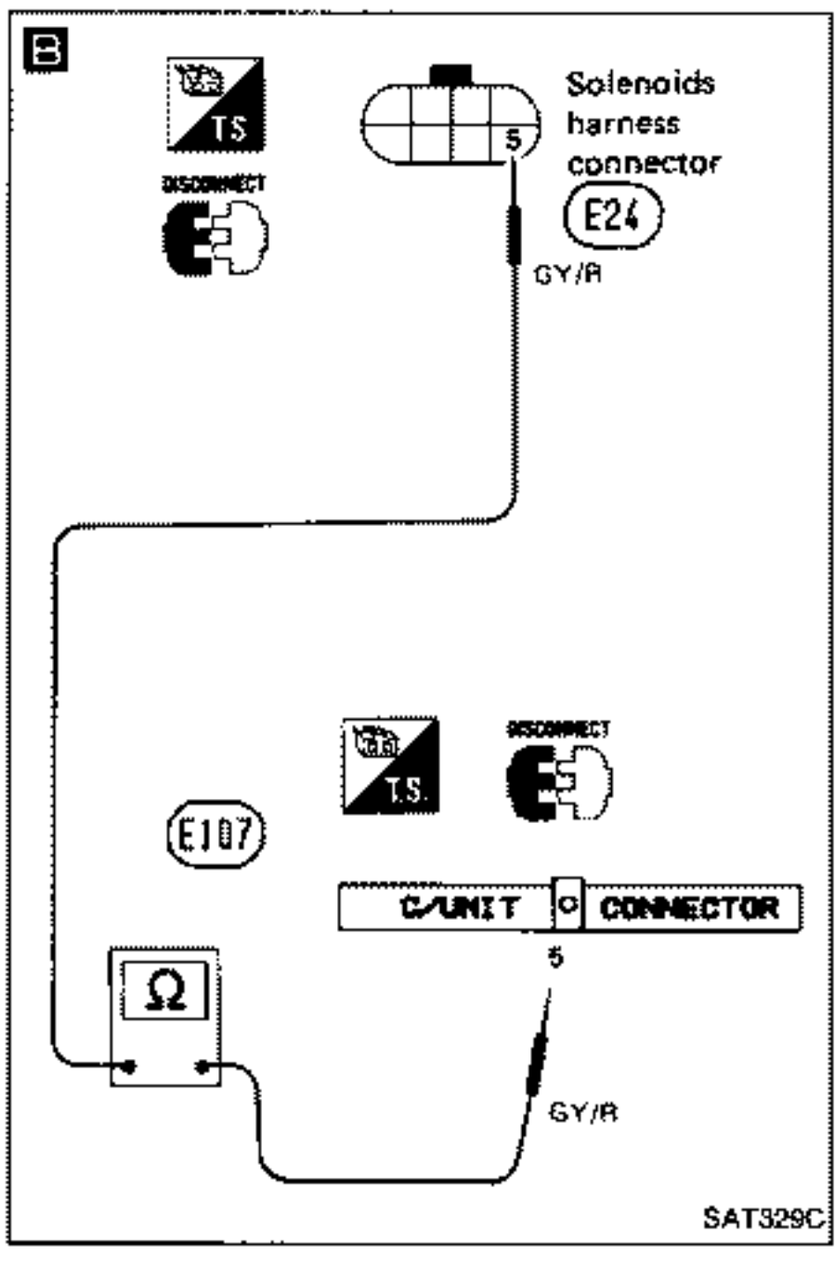

A

CHECK GROUND CIRCUIT.

1. 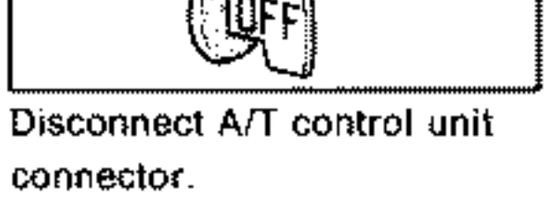

2. Disconnect terminal cord assembly connector in engine compartment.
3. Check resistance between terminal ⑤ and ground.
   Resistance: 10 - 20Ω

N.G. →
1. Remove oil pan. — Refer to "ON-VEHICLE SERVICE".
2. Check the following items.
- Lock-up solenoid — Refer to "Electrical Components Inspection".
- Harness continuity of terminal cord assembly

O.K. ↓

B

CHECK POWER SOURCE CIRCUIT.

1.

2. Disconnect A/T control unit connector.
3. Check resistance between terminal ⑤ and A/T control unit terminal ⑤.
   Resistance:
   Approximately 0Ω
4. Reinstall any part removed.

N.G. → Repair or replace harness between A/T control unit and terminal cord assembly.

O.K. ↓

Perform self-diagnosis after driving for a while.

N.G. →
1. Perform A/T control unit input/output signal inspection.
2. If N.G., recheck A/T control unit pin terminals for damage or connection of A/T control unit harness connector.

O.K. ↓

INSPECTION END

Self-diagnosis (Cont'd)

FLUID TEMPERATURE SENSOR CIRCUIT AND A/T CONTROL UNIT POWER SOURCE CIRCUIT CHECKS

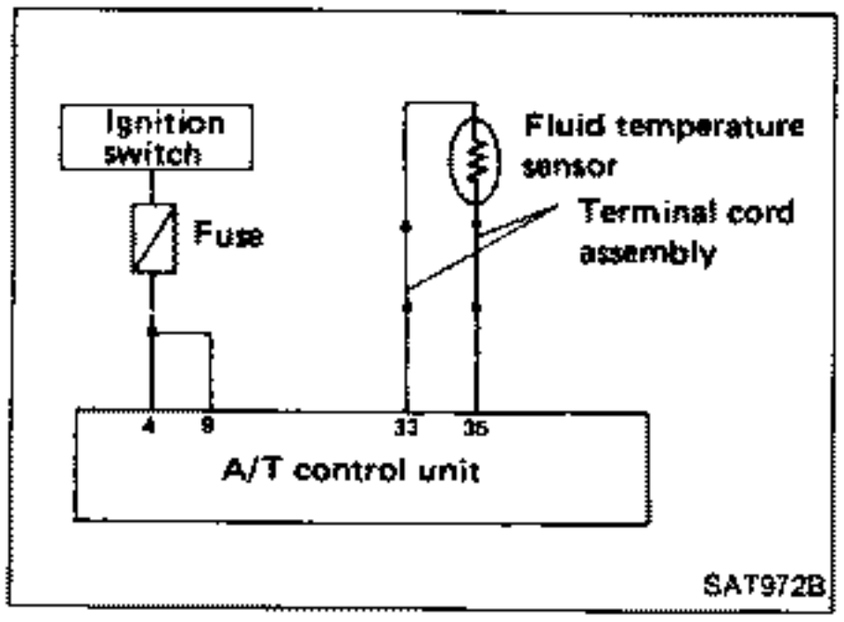

A

CHECK A/T CONTROL UNIT POWER SOURCE.

1. 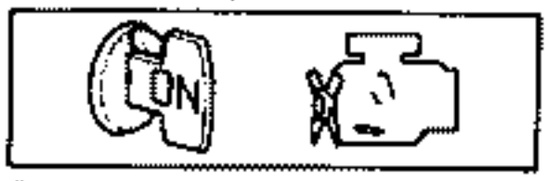

2. Check voltage between A/T control unit terminals ④, ⑨ and ground.
   Battery voltage should exist.

N.G. → Check the following items.
- Harness continuity between ignition switch and A/T control unit
- Ignition switch and fuse
  — Refer to section EL.

O.K. ↓

B

CHECK FLUID TEMPERATURE SENSOR WITH TERMINAL CORD ASSEMBLY.

1. 

2. Disconnect terminal cord assembly connector in engine compartment.
3. Check resistance between terminals ㉝ and ㉟ when A/T is cold.
   Resistance:
   Cold [20°C (68°F)]
   Approximately 2.5 kΩ
4. Reinstall any part removed.

N.G. → 1. Remove control valve cover.
2. Check the following items.
- Fluid temperature sensor
  — Refer to "Electrical Components Inspection".
- Harness continuity of terminal cord assembly

O.K. ↓

Ⓐ

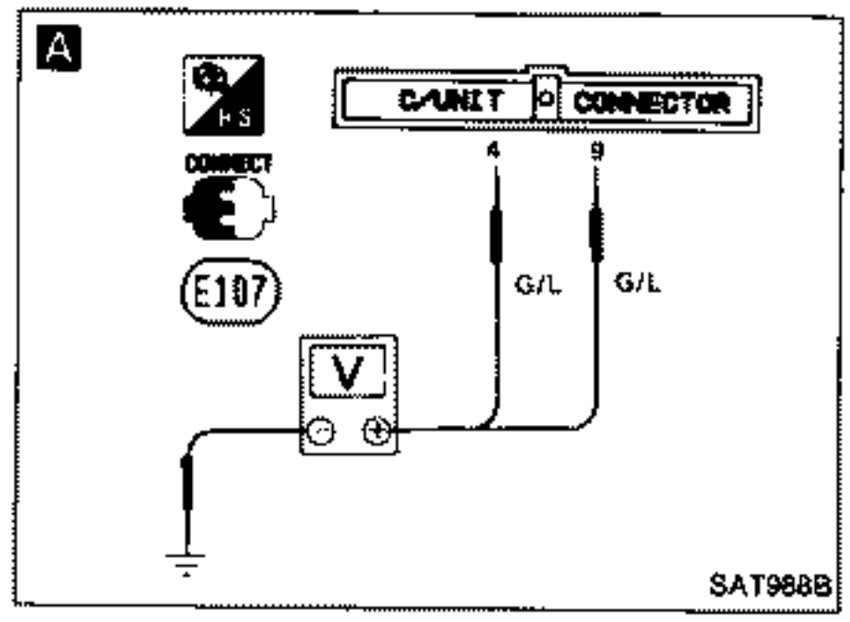

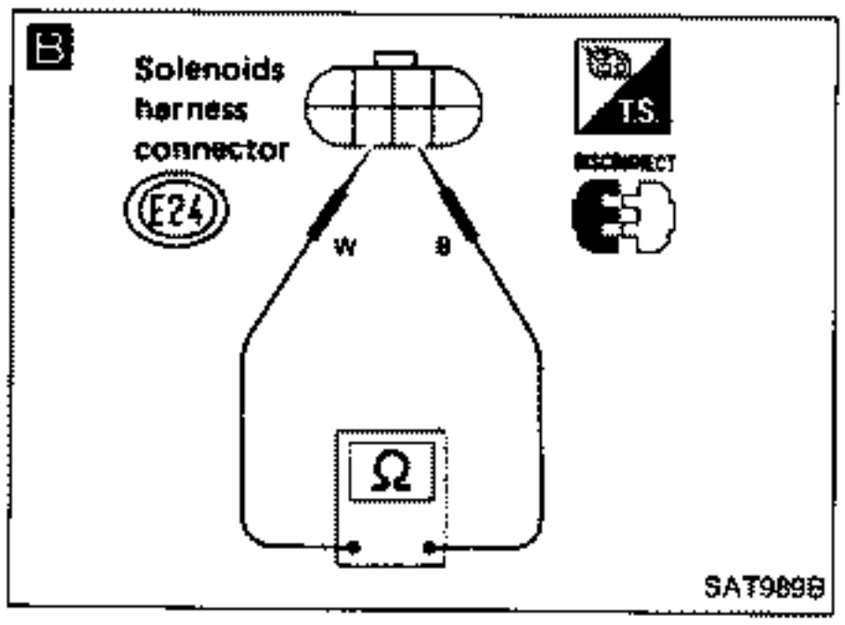

Self-diagnosis (Cont'd)

C

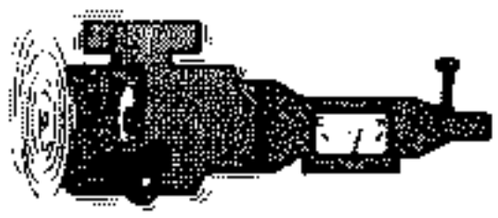

MONITOR	NO FAIL
CPR/S SE1·A/T	0km/h
CAR/S SE2·MTR	5km/h
THROTTLE SEN	0.4V
FLUID TEMP SE	1.2V
BATTERY VOLT	13.4V
ENG REV	1024rpm
SLCT LEVER SW	ON
R-RANGE SW	OFF
N-RANGE SW	ON

RECORD

SAT330C

C



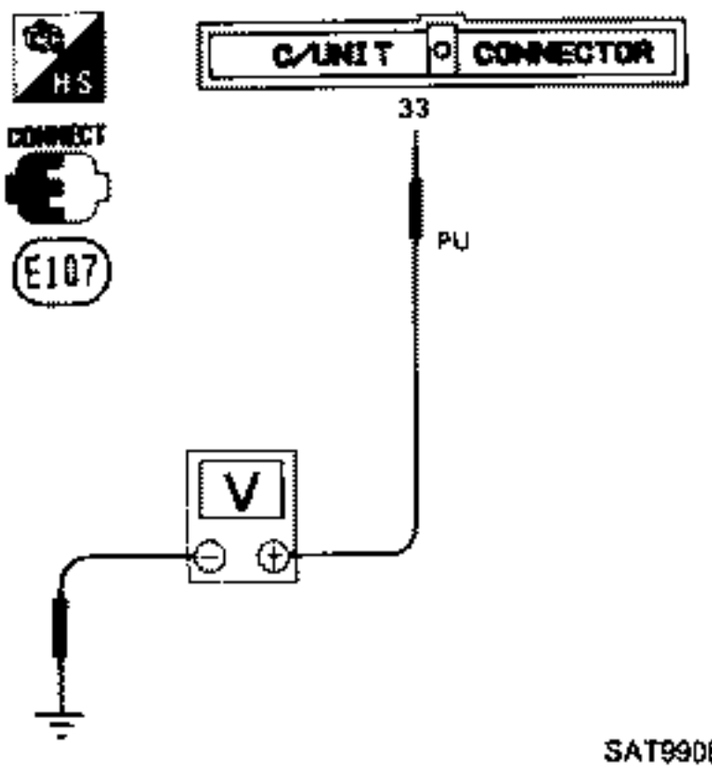

SAT990B

Ⓐ

C

CHECK INPUT SIGNAL OF FLUID TEMPERATURE SENSOR.

1.

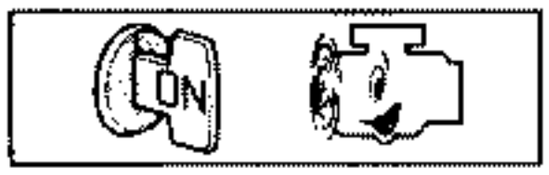

2.

- Select "E.C.U. INPUT SIGNALS".
- Read out the value of "FLUID TEMPERATURE SENSOR ".

Voltage:
Cold [20°C (68°F)] → Hot [80°C (176°F)]:
Approximately 1.5V → 0.5V

N.G. → Check harness continuity between A/T control unit and terminal cord assembly.

OR

- Check voltage between A/T control unit terminal ㉝ and ground while warming up A/T.

Voltage:
Cold [20°C (68°F)] → Hot [80°C (176°F)]:
Approximately 1.5V → 0.5V

O.K.

Perform self-diagnosis after driving for a while.

N.G. →
1. Perform A/T control unit input/output signal inspection.
2. If N.G., recheck A/T control unit pin terminals for damage or connection of A/T control unit harness connector.

O.K.

INSPECTION END

Self-diagnosis (Cont'd)

ENGINE REVOLUTION SIGNAL CIRCUIT CHECK

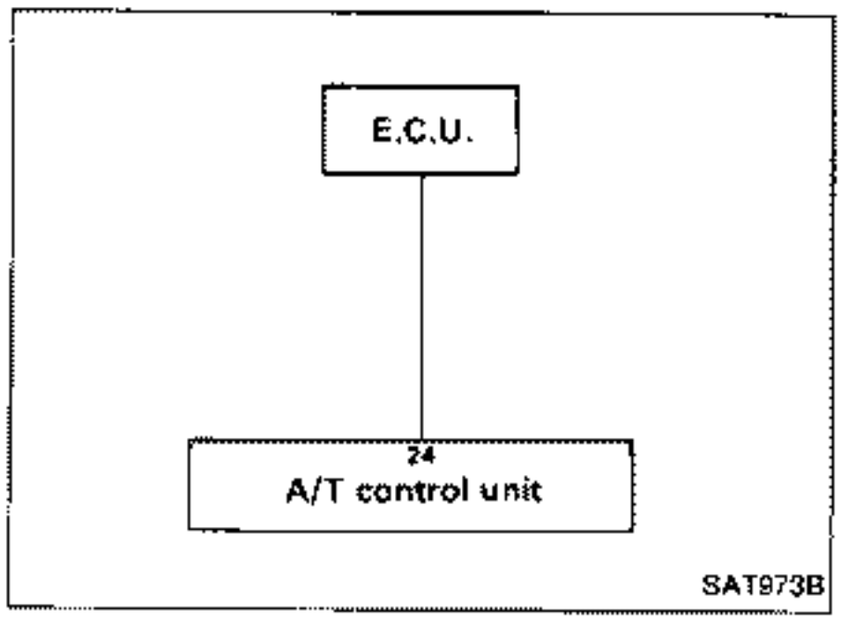

Check ignition circuit condition for engine.

N.G. → Repair or replace. — Refer to section EF & EC.

O.K. ↓

A

CHECK INPUT SIGNAL.

1.

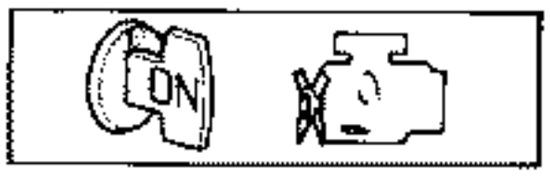

2.

- Select "E.C.U. INPUT SIGNALS".
- Read out the value of "ENGINE REVOLUTION".
- Check engine revolution changes according to throttle opening.

OR

- Check voltage between A/T control unit terminal ㉔ and ground.
  Voltage: 0.9 - 4.5V

N.G. → Check harness continuity between A/T control unit and E.C.C.S. control unit.

O.K. ↓

Perform self-diagnosis again after driving for a while.

N.G. → 1. Perform A/T control unit input/output signal inspection.
2. If N.G., recheck A/T control unit pin terminals for damage or connection of A/T control unit harness connector.

O.K. ↓

INSPECTION END

A

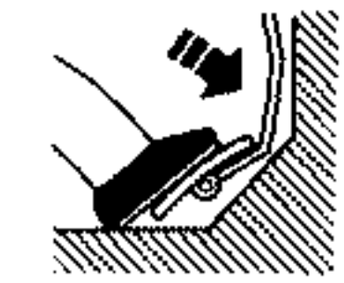

MONITOR NO FAIL

CAR/S SE1•A/T	0km/h
CAR/S SE2•MTR	5km/h
THROTTLE SEN	0.4V
FLUID TEMP SE	1.2V
BATTERY VOLT	13.4V
ENG REV	1024rpm
SLCT LEVER SW	ON
R-RANGE SW	OFF
H-RANGE SW	ON

RECORD

SAT331C

A

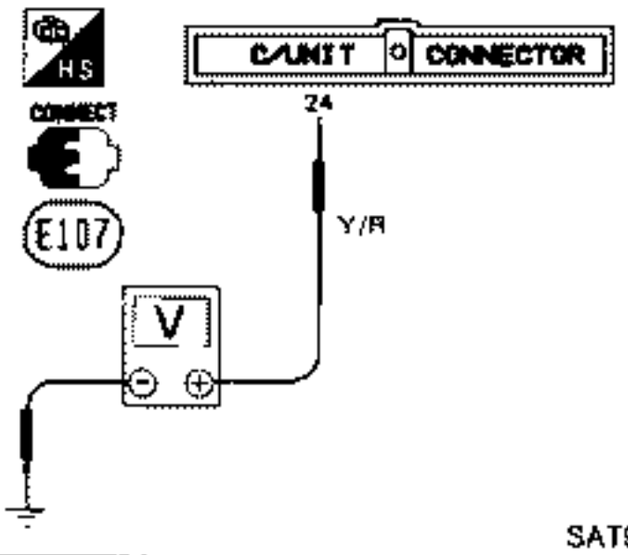

Self-diagnosis (Cont'd)

LINE PRESSURE SOLENOID CIRCUIT CHECK

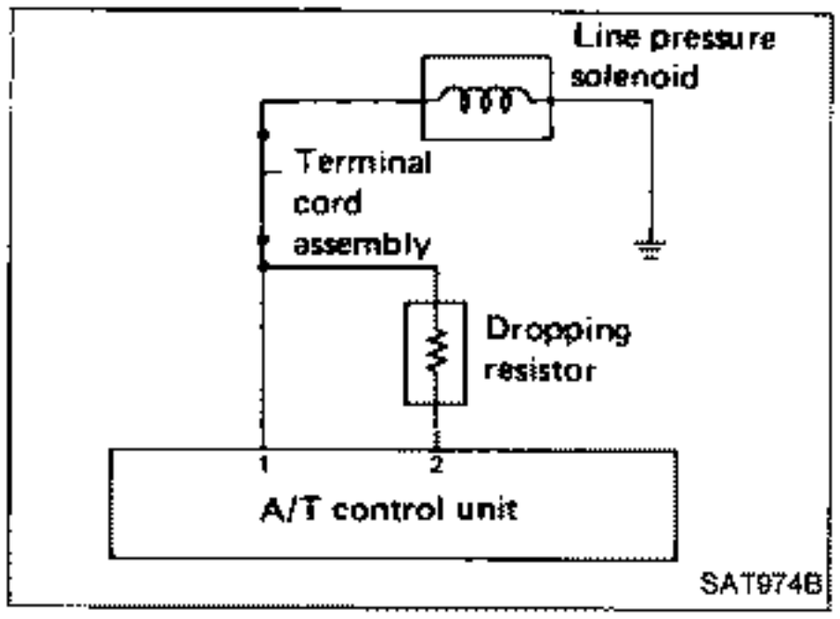

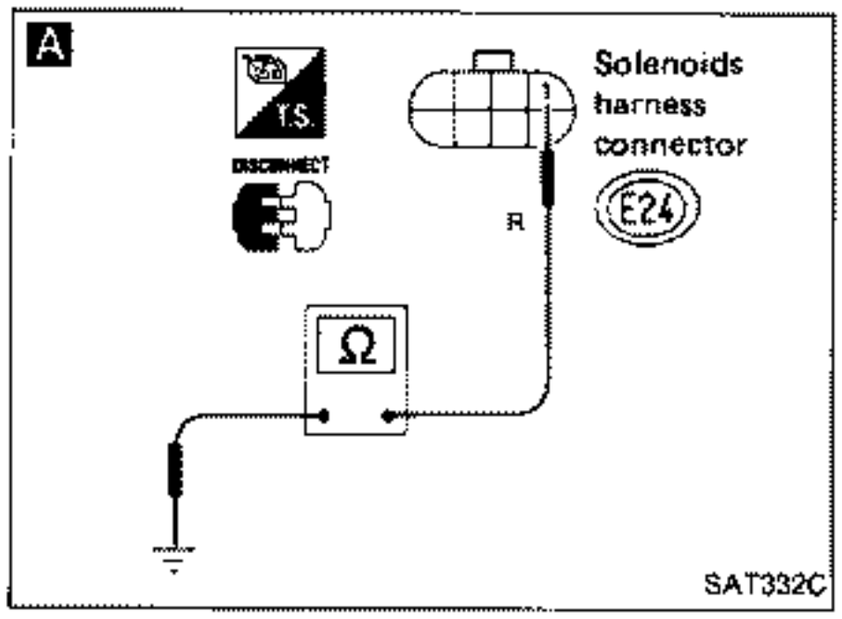

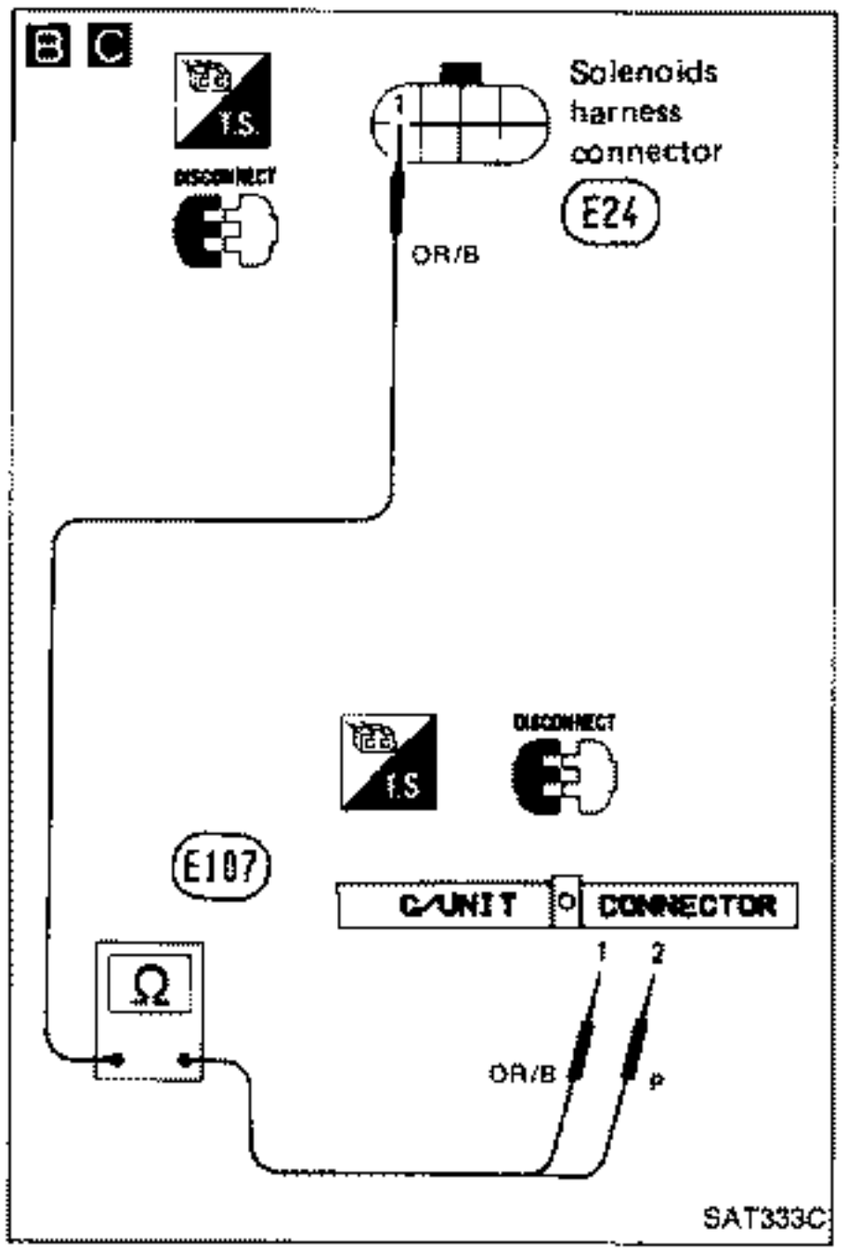

A

CHECK GROUND CIRCUIT.

1. 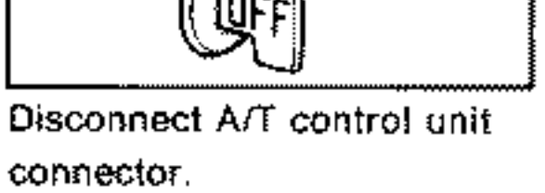

2. Disconnect terminal cord assembly connector in engine compartment.
3. Check resistance between terminal ① and ground.
   Resistance: 2.5 - 5Ω

N.G. →
1. Remove control valve assembly. — Refer to "ON-VEHICLE SERVICE".
2. Check the following items.
- Line pressure solenoid — Refer to "Electrical Components Inspection".
- Harness continuity of terminal cord assembly

O.K. ↓

B

CHECK POWER SOURCE CIRCUIT.

1.

2. Disconnect A/T control unit connector.
3. Check resistance between terminal ① and A/T control unit terminal ②.
   Resistance: 11.2 - 12.8Ω

N.G. →
Check the following items.
- Dropping resistor — Refer to "Electrical Components Inspection".
- Harness continuity between A/T control unit ② and terminal cord assembly

O.K. ↓

C

CHECK POWER SOURCE CIRCUIT.

1. 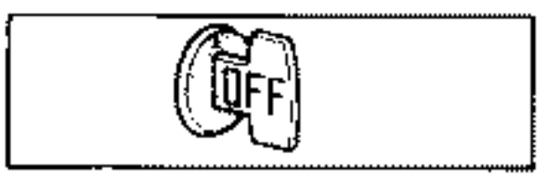

2. Check resistance between terminal ① and A/T control unit terminal ①.
   Resistance:
   Approximately 0Ω
3. Reinstall any part removed.

N.G. →
Repair or replace harness between A/T control unit ① and terminal cord assembly.

O.K. ↓

Perform self-diagnosis after driving for a while.

N.G. →
1. Perform A/T control unit input/output signal inspection.
2. If N.G., recheck A/T control unit pin terminals for damage or connection of A/T control unit harness connector.

O.K. ↓

INSPECTION END

Self-diagnosis (Cont'd)

INHIBITOR, OVERDRIVE, KICKDOWN AND IDLE SWITCH CIRCUIT CHECKS

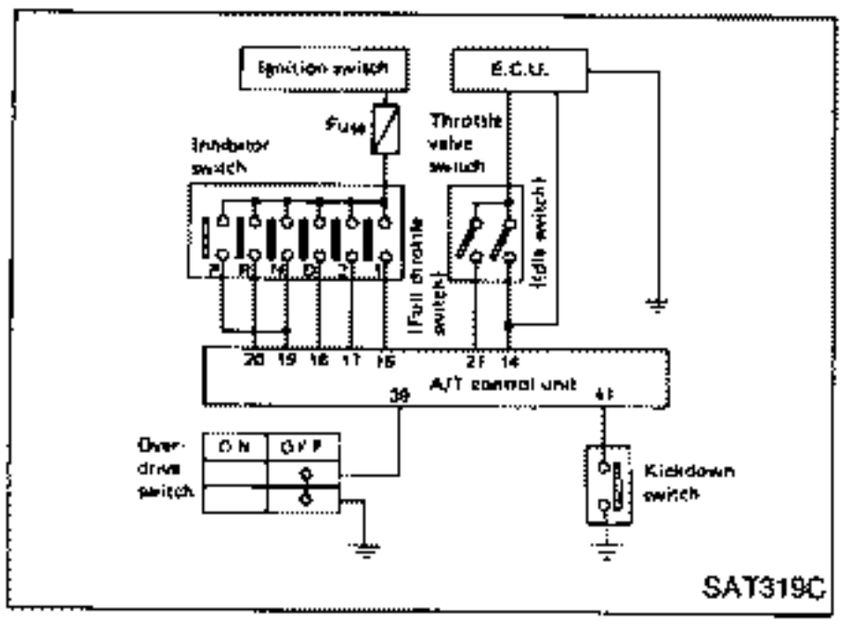

SAT319C

A

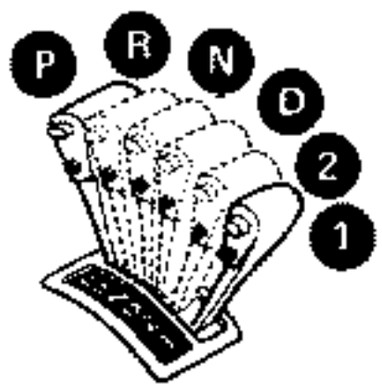

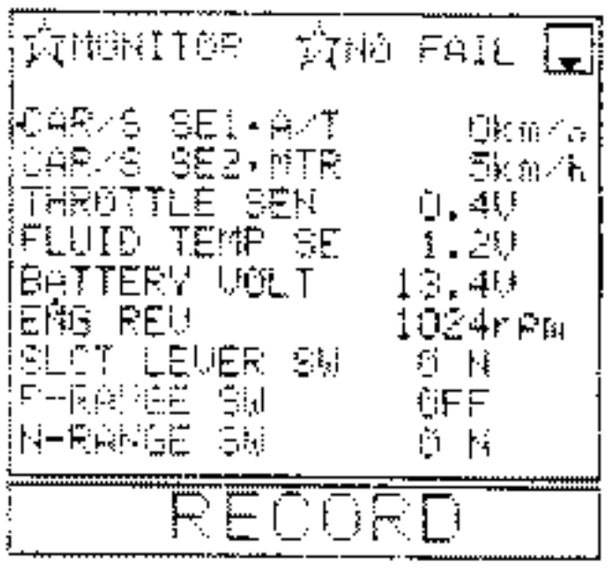

SAT334C

A

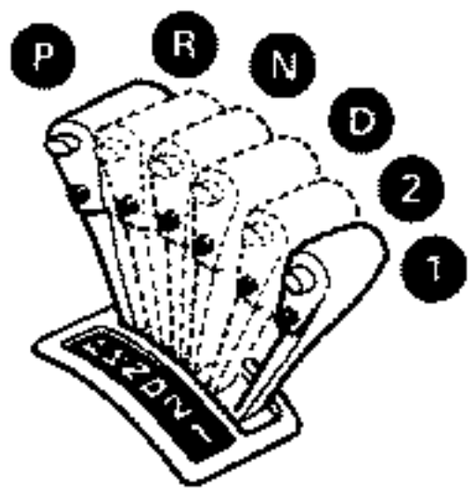

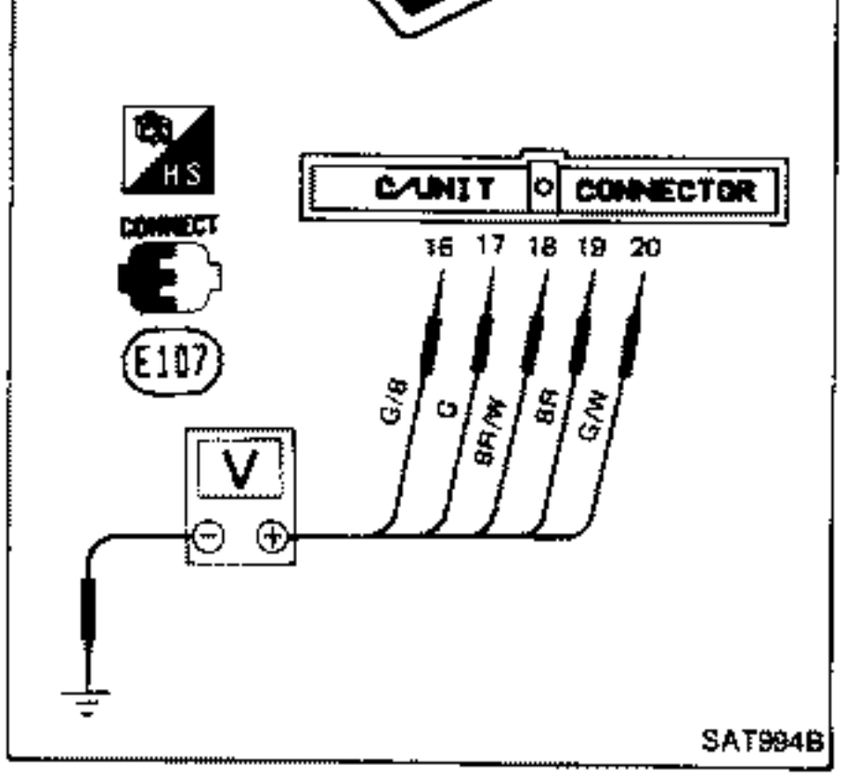

SAT994B

A

CHECK INHIBITOR SWITCH CIRCUIT.

1.

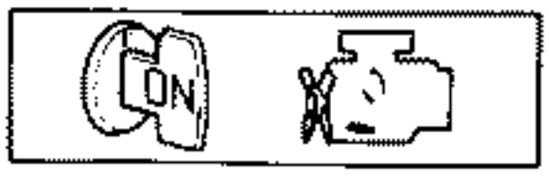

2.

- Select "E.C.U. INPUT signals".
- Read out "R, N, D, 1 and 2 range switches" moving selector lever to each range.
- Check the selector lever position is indicated properly.

OR

Check voltage between A/T control unit terminals ⑯, ⑰, ⑱, ⑲, ⑳ and ground while moving selector lever through each range.

Voltage:

B: Battery voltage

0: 0V

Lever position \ Terminal No.	⑲	⑳	⑱	⑰	⑯
P, N	B	0	0	0	0
R	0	B	0	0	0
D	0	0	B	0	0
2	0	0	0	B	0
1	0	0	0	0	B

N.G. →

Check the following items.

- Inhibitor switch — Refer to "Electrical Components Inspection".
- Harness continuity between ignition switch and inhibitor switch
- Harness continuity between inhibitor switch and A/T control unit

O.K.

Ⓐ

Self-diagnosis (Cont'd)

B

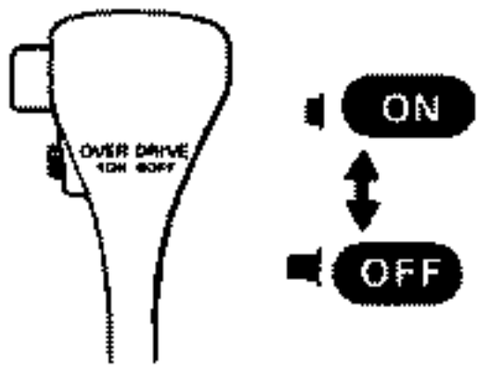

MONITOR	NO FAIL
CAR/S SE1·A/T	0km/h
CAR/S SE2·MTR	5km/h
THROTTLE SEN	0.4V
FLUID TEMP SE	1.2V
BATTERY VOLT	13.4V
ENG REV	1024rpm
SLCT LEVER SW	ON
R-RANGE SW	OFF
N-RANGE SW	ON

RECORD

SAT335C

B

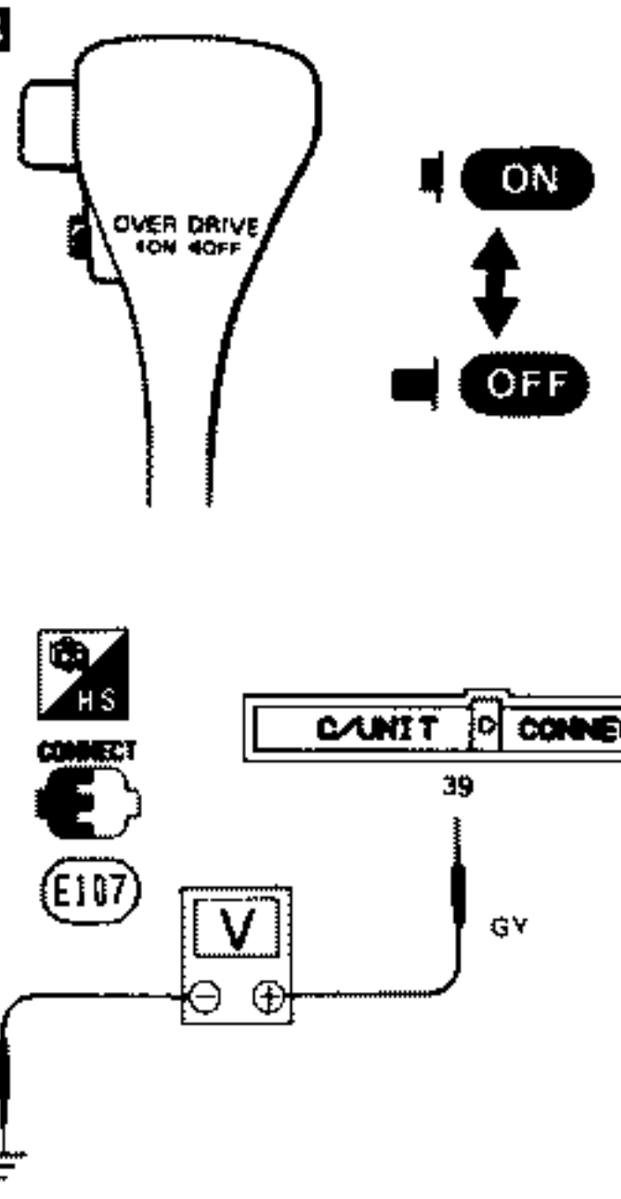

SAT995B

B

Ⓐ

CHECK OVERDRIVE SWITCH CIRCUIT.

1.

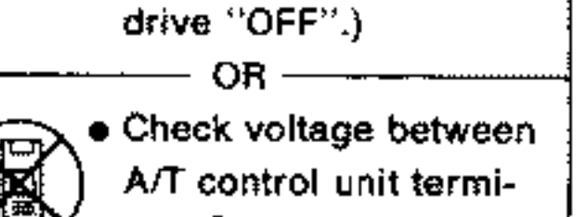

2.

- Select "E.C.U. INPUT SIGNALS".
- Read out "SELECTOR LEVER SWITCH (Overdrive switch)".
- Check the selector lever switch position is indicated properly. (Selector lever switch "ON" displayed on CONSULT means overdrive "OFF".)

OR

- Check voltage between A/T control unit terminal (39) and ground when overdrive switch is in "ON" position and in "OFF" position.

Switch position	Voltage
ON	Battery voltage
OFF	1V or less

N.G. → Check the following items.
- Overdrive switch — Refer to "Electrical Components Inspection".
- Harness continuity between A/T control unit and overdrive switch
- Harness continuity of ground circuit for overdrive switch

O.K.

Ⓑ

Self-diagnosis (Cont'd)

C

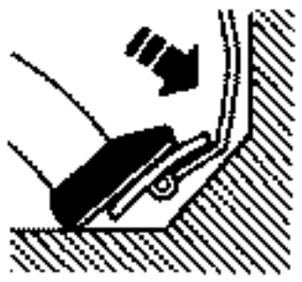

MONITOR	NO FAIL
0-RANGE SW	OFF
1-RANGE SW	OFF
2-RANGE SW	OFF
ASCD-CRUISE	OFF
ASCD-OD CUT	OFF
KICKDOWN SW	OFF
POWERSHIFT SW	OFF
IDLE SW	ON
FULL THRTL SW	OFF

RECORD

SAT336C

C



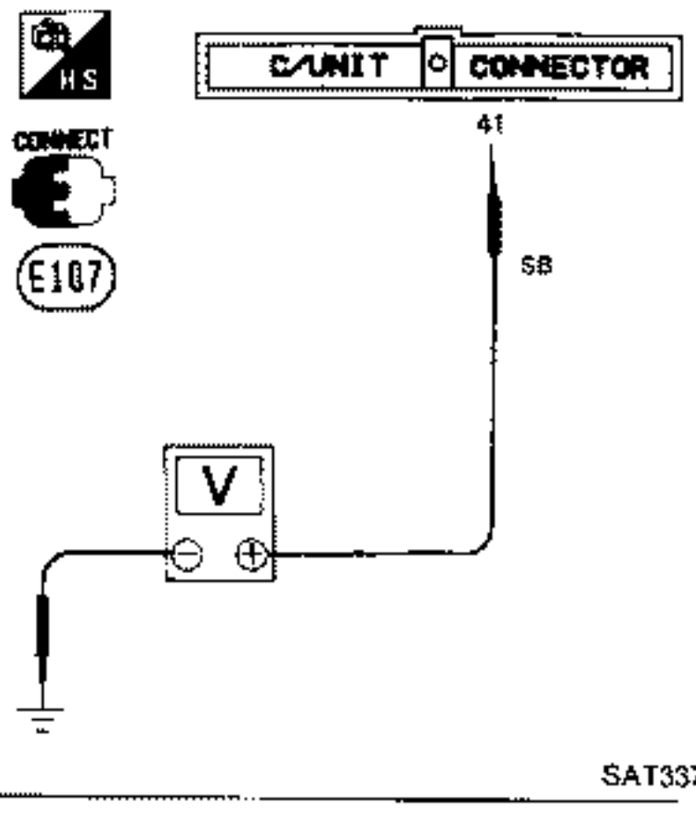

SAT337C

Ⓑ

C

CHECK KICKDOWN SWITCH CIRCUIT.

1.

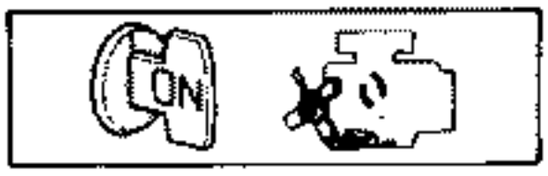

2.

- Select "E.C.U. INPUT SIGNALS".
- Read out "KICKDOWN SWITCH" depressing accelerator pedal fully.
- Check kickdown switch position is indicated properly.

— OR —

- Check voltage between A/T control unit terminal ㊶ and ground while depressing accelerator pedal slowly. (after warming up engine)

Voltage:

When releasing accelerator pedal:
3 - 8V

When depressing accelerator pedal fully:
1V or less

N.G.

Check the following items.
- Kickdown switch
- Harness continuity between A/T control unit and kickdown switch
- Harness continuity of ground circuit for kickdown switch

O.K.

Ⓒ

Self-diagnosis (Cont'd)

D



MONITOR	NO FAIL
D-RANGE SW	OFF
1-RANGE SW	OFF
2-RANGE SW	OFF
ASCD-CRUISE	OFF
ASCD-OD CUT	OFF
KICKDOWN SW	OFF
POWERSHIFT SW	OFF
IDLE SW	ON
FULL THRTL SW	OFF

RECORD

SAT338C

D



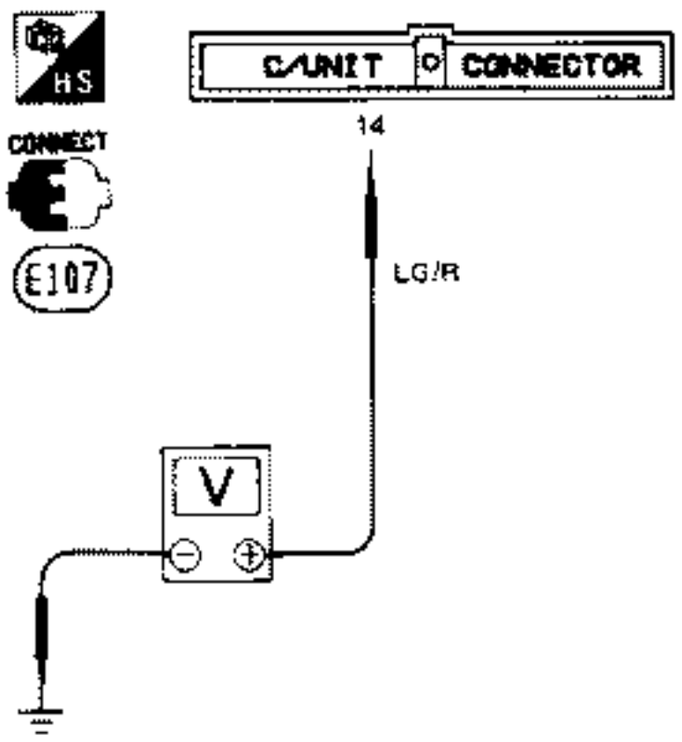

SAT339C

Ⓒ

D

CHECK IDLE SWITCH CIRCUIT.

1.

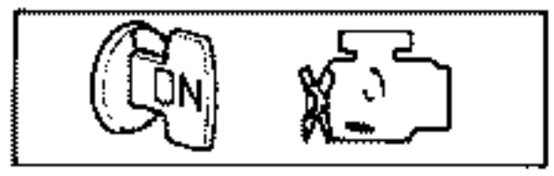

2.

- Select "E.C.U. INPUT SIGNALS".
- Read out "IDLE SWITCH" depressing and releasing accelerator pedal.
- Check idle switch changes ON or OFF.

— OR —

- Check voltage between A/T control unit terminal ⑭ and ground while depressing accelerator pedal slowly.

Voltage:

When releasing accelerator pedal:
8 - 15V

When depressing accelerator pedal fully:
1V or less

N.G. → Perform self-diagnosis (Mode IV) for engine control. Check idle switch circuit.

- O.K. → Check harness continuity between A/T control unit and idle switch.
- N.G. → Check idle switch circuit for engine control. — Refer to section EF & EC.

O.K.

Perform self-diagnosis again after driving for a while.

N.G. →
1. Perform A/T control unit input/output signal inspection.
2. If N.G., recheck A/T control unit pin terminals for damage or connection of A/T control unit harness connector.

O.K.

INSPECTION END

Diagnostic Procedure 1

SYMPTOM: A/T CHECK lamp does not come on for about 2 seconds when turning ignition switch to "ON".

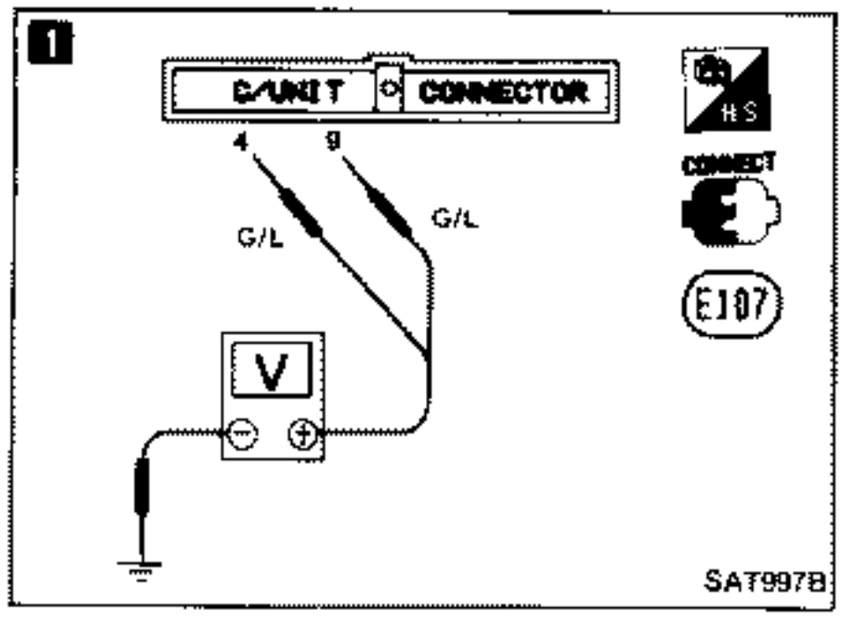

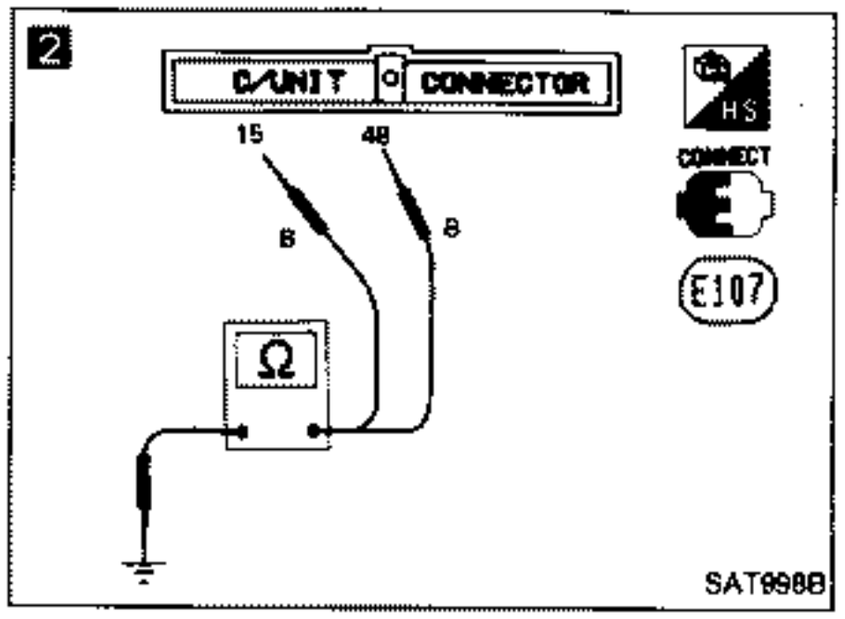

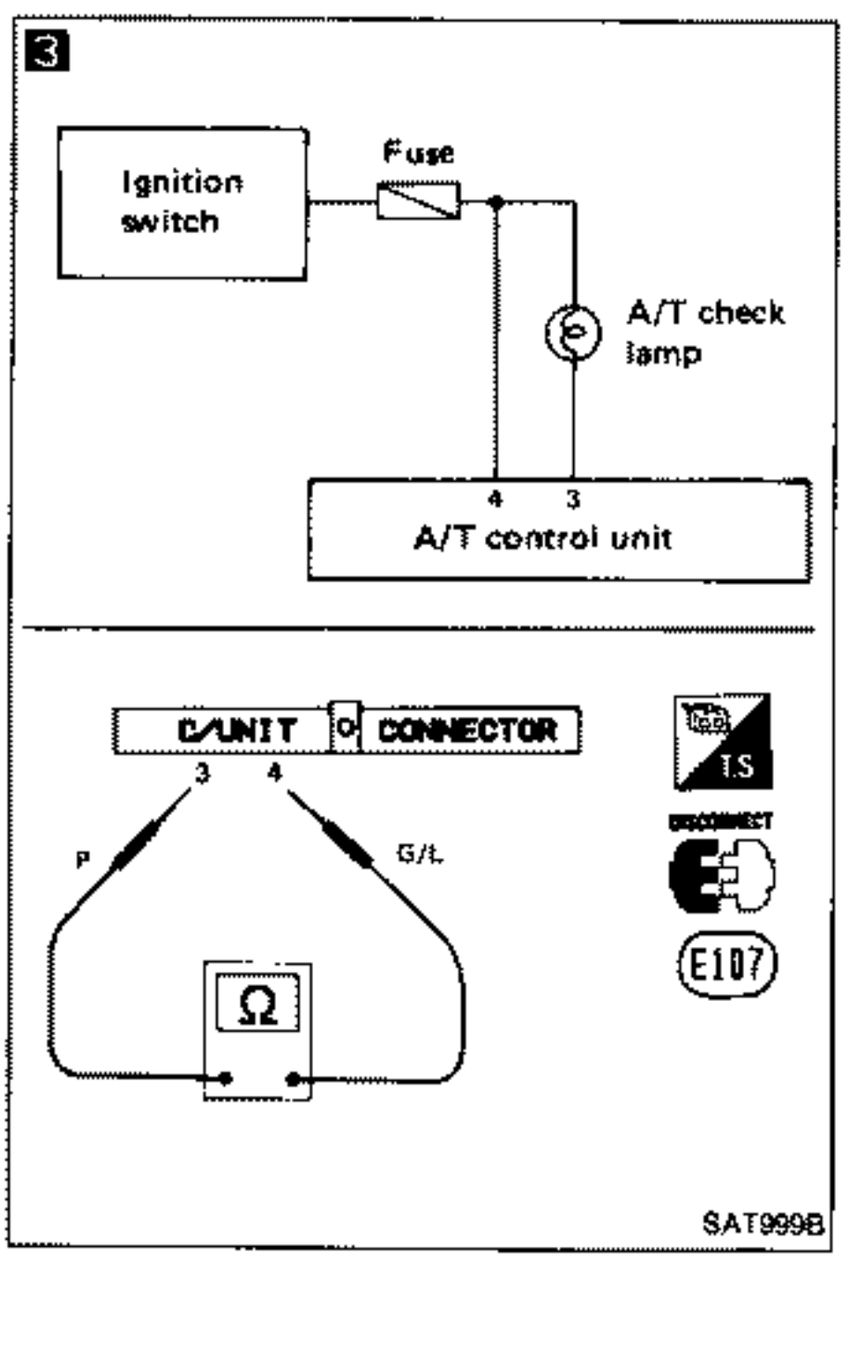

1

CHECK A/T CONTROL UNIT POWER SOURCE.

1. 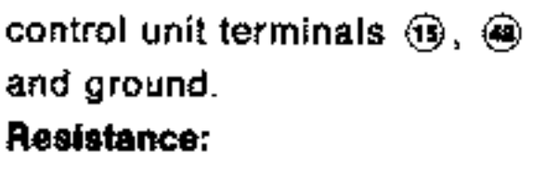

2. Check voltage between A/T control unit terminals ④, ⑨ and ground.

Battery voltage should exist.

N.G. → Check the following items.
- Harness continuity between ignition switch and A/T control unit.
- Ignition switch and fuse — Refer to section EL.

O.K. ↓

2

CHECK A/T CONTROL UNIT GROUND CIRCUIT.

1. 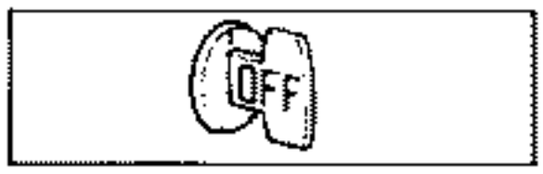

2. Disconnect A/T control unit connector.
3. Check resistance between A/T control unit terminals ⑮, ㊽ and ground.

Resistance:

Approximately 0Ω

N.G. → Check harness continuity between A/T control unit and ground.

O.K. ↓

3

CHECK LAMP CIRCUIT.

1. 

2. Disconnect A/T control unit connector.
3. Check resistance between A/T control unit terminals ③ and ④.

Resistance: 50 - 100Ω

4. Reinstall any part removed.

N.G. → Check the following items.
- A/T check lamp
- Harness continuity between ignition switch and A/T check lamp
- Harness continuity between A/T check lamp and A/T control unit

O.K. ↓

Check again. N.G. → 1. Perform A/T control unit input/output signal inspection.
2. If N.G., recheck A/T control unit pin terminals for damage or connection of A/T control unit harness connector.

O.K. ↓

INSPECTION END

1

Self-diagnosis start

Light

Shade

SAT146B

Diagnostic Procedure 2

SYMPTOM: Engine cannot be started with selector lever in "P" or "N" range or engine can be started with selector lever in "D", "2", "1" or "R" range.

Does "E.C.U. INPUT SIGNALS" show damage to inhibitor switch circuit? — Yes → Check inhibitor switch circuit. — Refer to "Self-diagnosis".

— OR —

1 Does self-diagnosis show damage to inhibitor switch circuit? — No →

2 Check continuity of inhibitor switch 2-pin connector. — Refer to "Electrical Components Inspection". — N.G. → Repair or replace inhibitor switch.

O.K. ↓

Check starting system. — Refer to section EL. — N.G. → Repair or replace damaged parts.

O.K. ↓

INSPECTION END

2

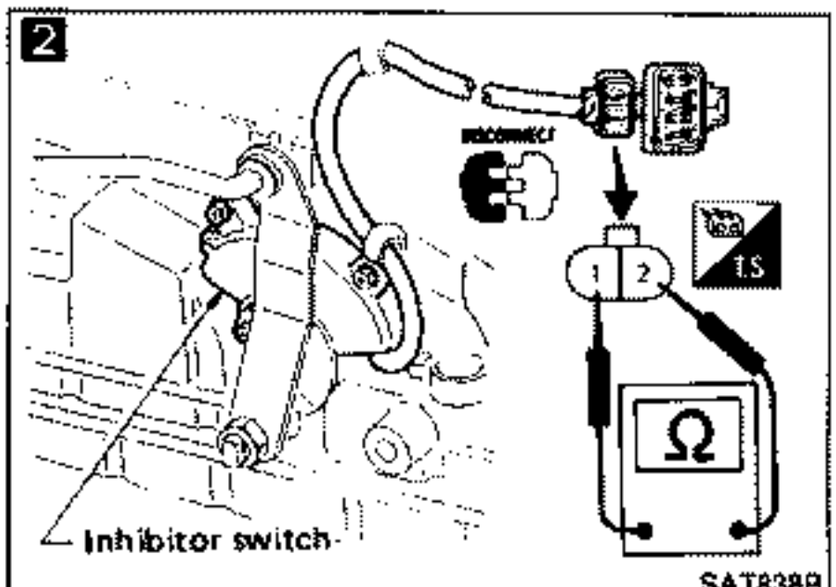

SAT838B

1

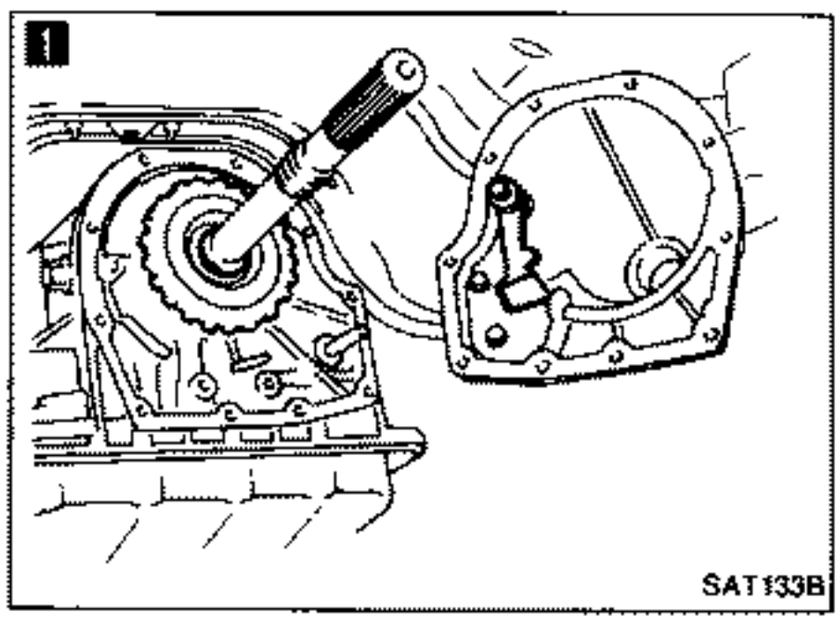

SAT133B

Diagnostic Procedure 3

SYMPTOM: Vehicle moves when it is pushed forward or backward with selector lever in "P" range.

1

Check parking components. — Refer to "ON-VEHICLE SERVICE". — N.G. → Repair or replace damaged parts.

O.K. ↓

INSPECTION END

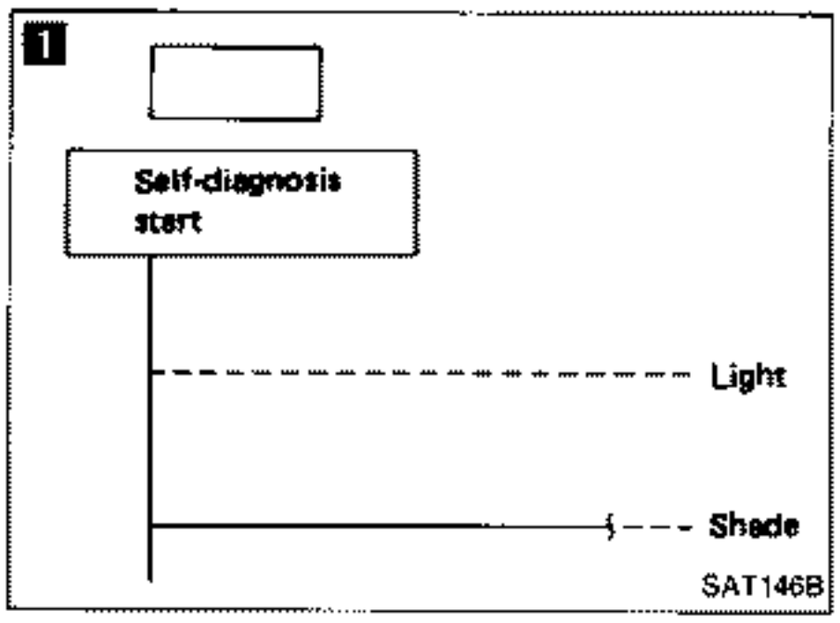

Diagnostic Procedure 4

SYMPTOM: Vehicle moves forward or backward when selecting "N" range.

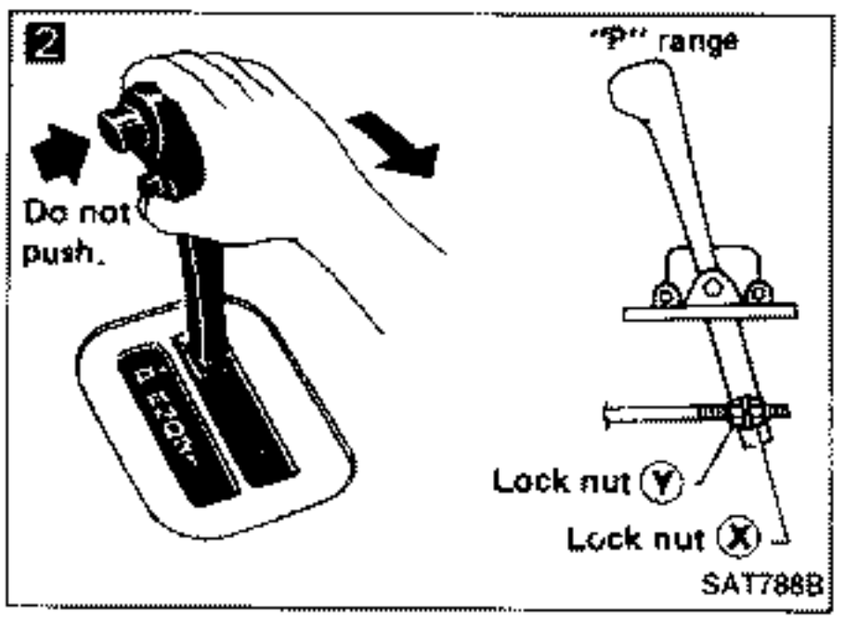



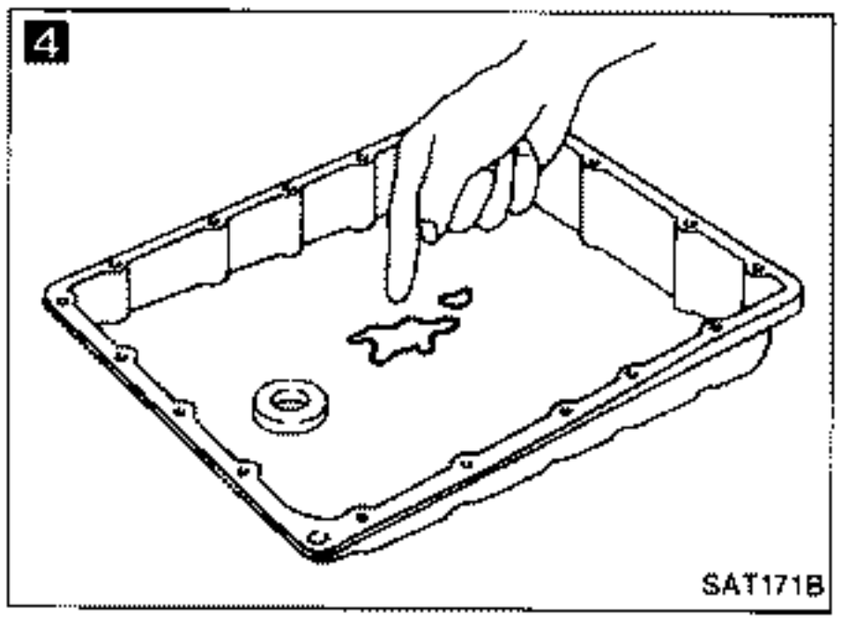

Does "E.C.U. INPUT SIGNALS" show damage to inhibitor switch circuit?
Yes → Check Inhibitor switch circuit. — Refer to "Self-diagnosis".

— OR —

1

Does self-diagnosis show damage to inhibitor switch circuit?

No ↓

Check manual control linkage. — Refer to "ON-VEHICLE SERVICE".
N.G. → 2 Adjust manual control linkage. — Refer to "ON-VEHICLE SERVICE".

O.K. ↓

3 Check A/T fluid level again.
N.G. → Refill A.T.F.

O.K. ↓

4 1. Remove oil pan.
2. Check A/T fluid condition.
N.G. → 1. Disassemble A/T.
2. Check the following items.
- Forward clutch assembly
- Overrun clutch assembly
- Reverse clutch assembly
- Accumulator piston D

O.K. ↓

Check again.
N.G. → 1. Perform A/T control unit input/output signal inspection.
2. If N.G., recheck A/T control unit pin terminals for damage or connection of A/T control unit harness connector.

O.K. ↓

INSPECTION END

Diagnostic Procedure 5

SYMPTOM: There is large shock when changing from "N" to "R" range.

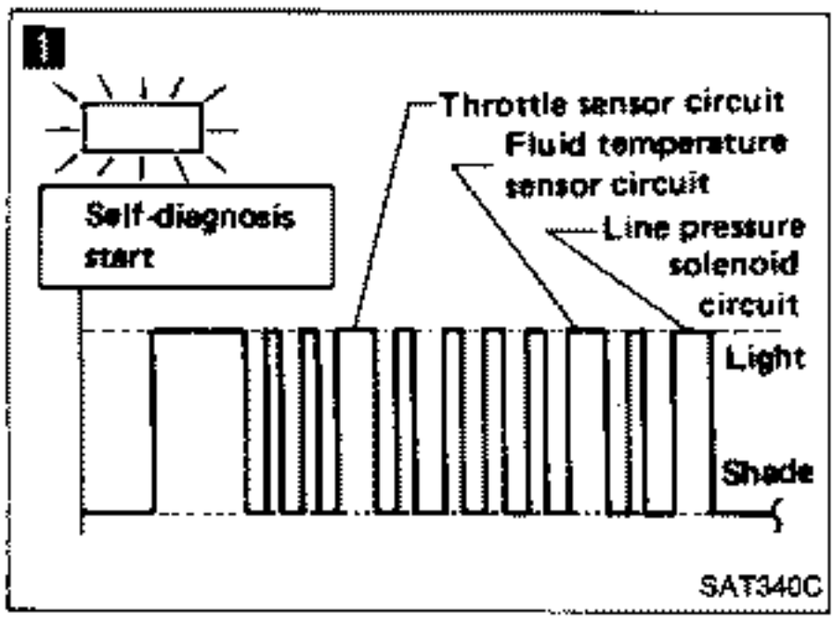

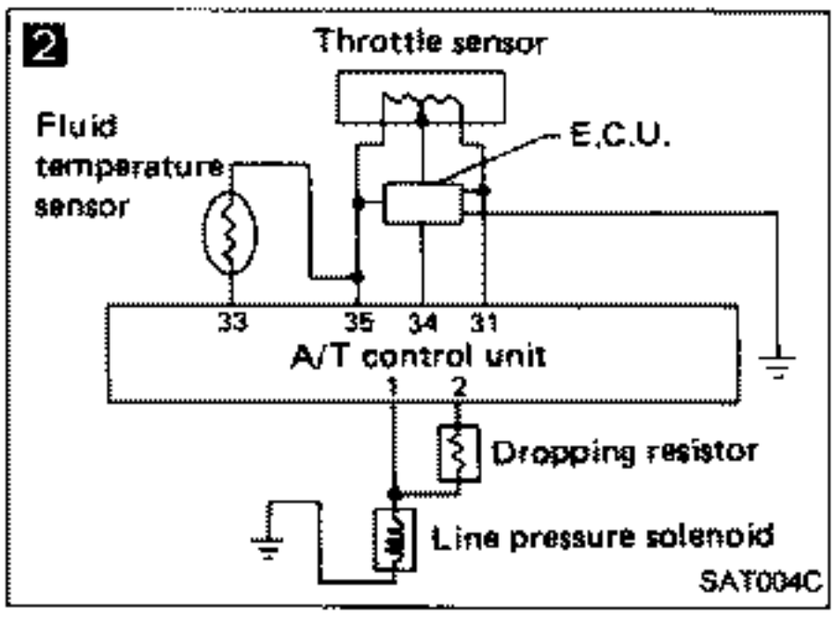

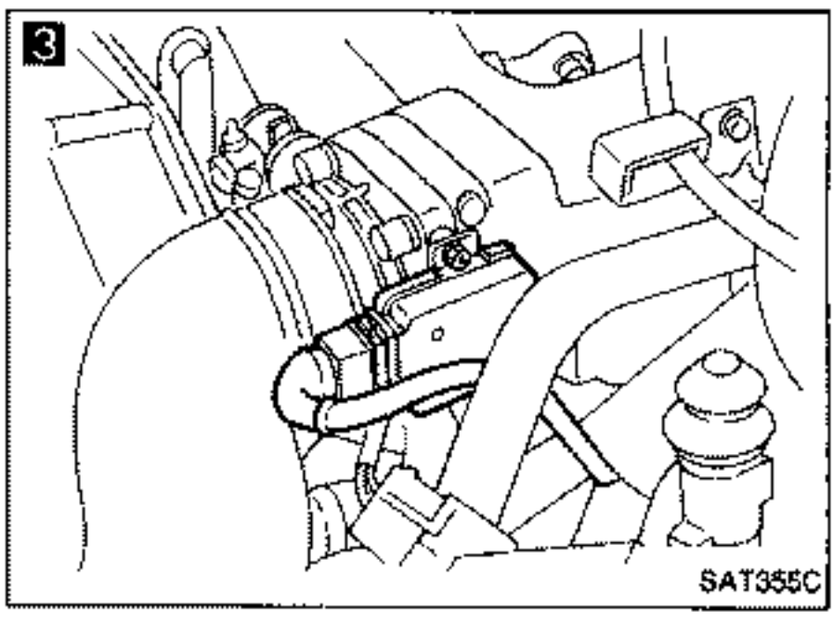

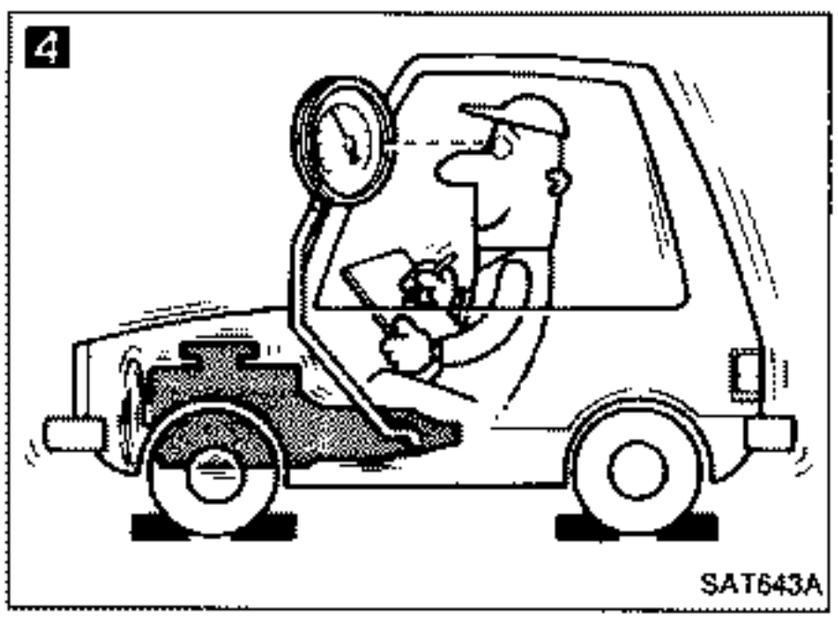

1 Does self-diagnosis show damage to throttle sensor, line pressure solenoid or fluid temperature sensor circuit?

Yes → **2** Check damaged circuit. — Refer to "Self-diagnosis".

No ↓

3 Check throttle sensor. — Refer to section EF & EC.

N.G. → Repair or replace throttle sensor.

O.K. ↓

4 Check line pressure at idle with selector lever in "D" range. — Refer to "PRESSURE TESTING".

N.G. →
1. Remove control valve assembly. — Refer to "ON-VEHICLE SERVICE".
2. Check the following items.
- Valves to control line pressure (Pressure regulator valve, modifier valve, pilot valve and pilot filter)
- Line pressure solenoid

O.K. ↓

Check again.

N.G. →
1. Perform A/T control unit input/output signal inspection.
2. If N.G., recheck A/T control unit pin terminals for damage or connection of A/T control unit harness connector.

O.K. ↓

INSPECTION END

1



SAT638A

Diagnostic Procedure 6

SYMPTOM: Vehicle does not creep backward when selecting "R" range.

1

Check A/T fluid level again. — N.G. → Refill A.T.F.

O.K.

N.G. in both "1" and "R" ranges

2

Check stall revolution with selector lever in "1" and "R" range.

O.K.

O.K. in "1" range
N.G. in "R" range

2

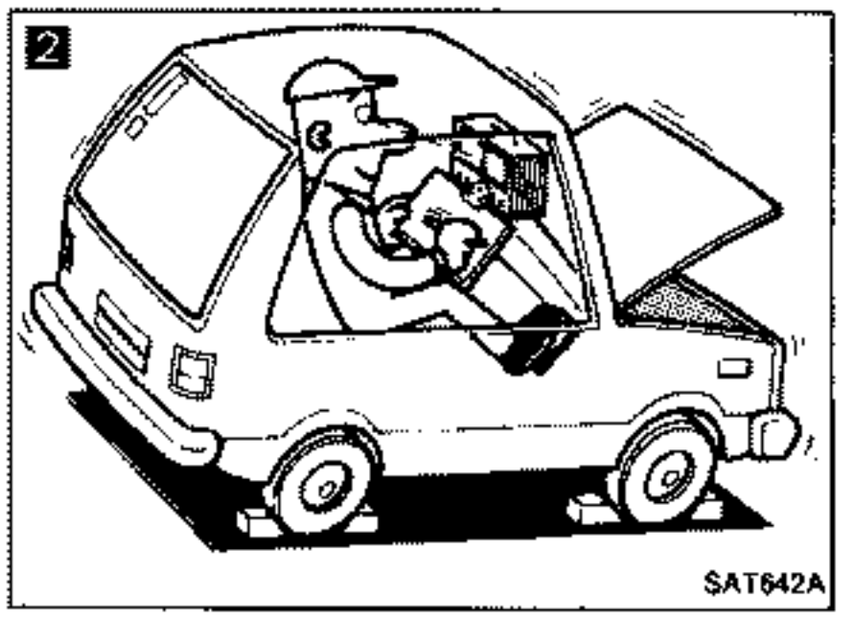

SAT642A

3

Check line pressure at idle with selector lever in "R" range. — Refer to "PRESSURE TESTING". — N.G.

O.K.

3

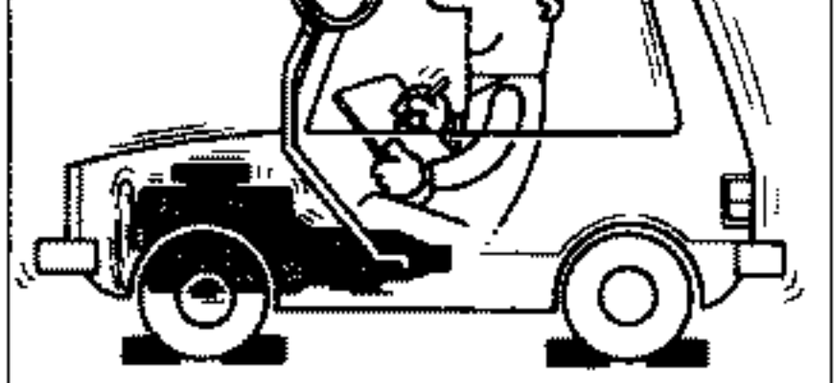

SAT643A

4

1. Remove oil pan.
2. Check fluid condition.

N.G.

O.K.

4

SAT171B

Check again. — N.G.

O.K.

INSPECTION END

1. Remove control valve assembly. — Refer to "ON-VEHICLE SERVICE".
2. Check the following items.
- Valves to control line pressure (Pressure regulator valve, pilot valve and pilot filter)
- Line pressure solenoid
3. Disassemble A/T.
4. Check the following items.
- Oil pump assembly
- Torque converter
- Reverse clutch assembly
- High clutch assembly
- Low & reverse brake assembly
- Low one-way clutch

1. Perform A/T control unit input/output signal inspection.
2. If N.G., recheck A/T control unit pin terminals for damage or connection of A/T control unit harness connector.

Diagnostic Procedure 7

SYMPTOM: Vehicle does not creep forward when selecting "D", "2" or "1" range.

1



SAT638A

2

Check A/T fluid level again.

N.G. → Refill A.T.F.

O.K. ↓

2

Check stall revolution with selector lever in "D" range.
— Refer to "STALL TESTING".

N.G. →
1. Remove control valve assembly. — Refer to "ON-VEHICLE SERVICE".
2. Check the following items.
- Valves to control line pressure (Pressure regulator valve, modifier valve, pilot valve and pilot filter)
- Line pressure solenoid
3. Disassemble A/T.
4. Check the following items.
- Oil pump assembly

O.K. ↓

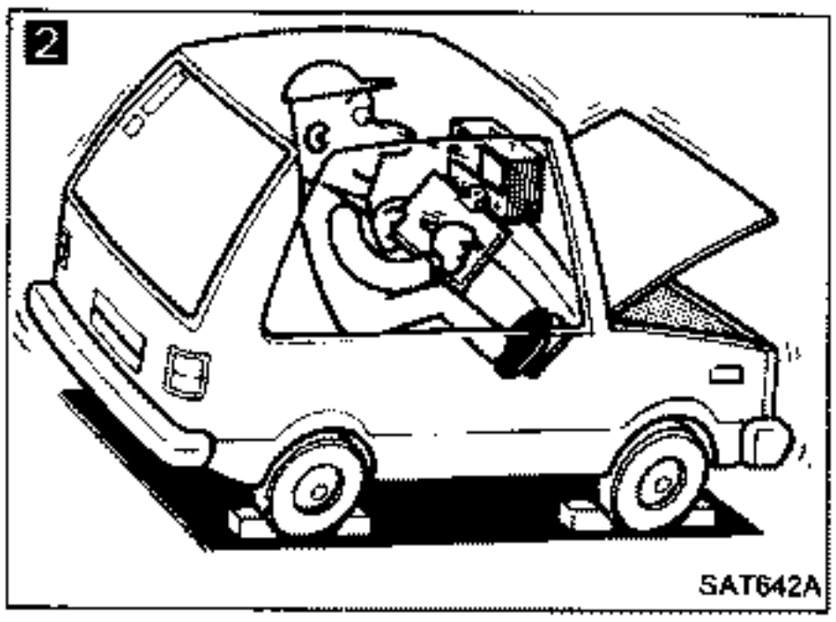

SAT642A

3

Check line pressure at idle with selector lever in "D" range.
— Refer to "PRESSURE TESTING".

N.G. →
- Forward clutch assembly
- Forward one-way clutch
- Low one-way clutch
- Low & reverse brake assembly
- Torque converter

O.K. ↓

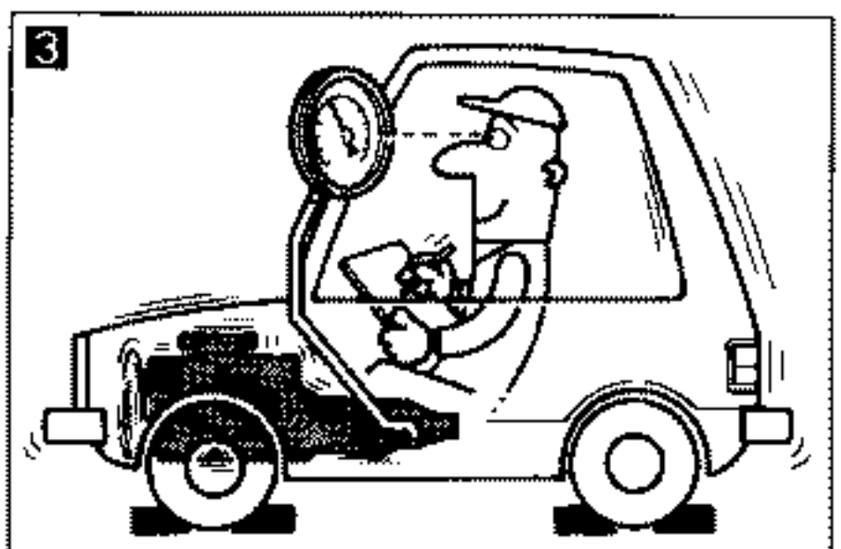

SAT643A

4

1. Remove oil pan.
2. Check A/T fluid condition.

N.G. →

O.K. ↓

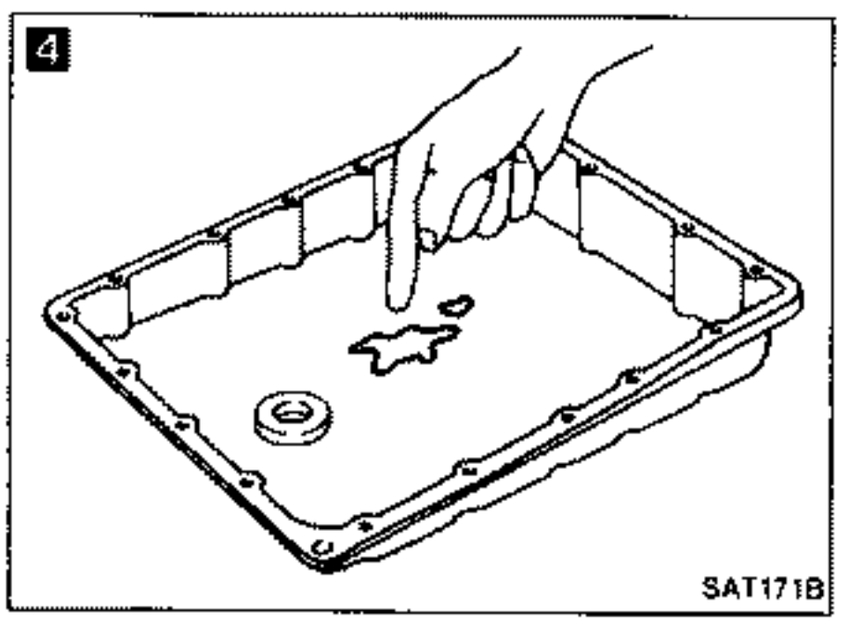

SAT171B

Check again.

N.G. →
1. Perform A/T control unit input/output signal inspection.
2. If N.G., recheck A/T control unit pin terminals for damage or connection of A/T control unit harness connector.

O.K. ↓

INSPECTION END

1

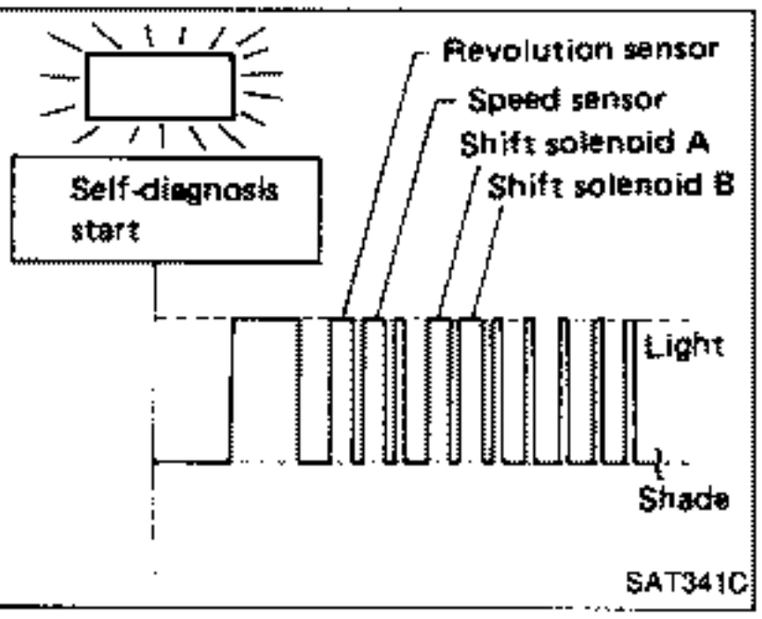

2

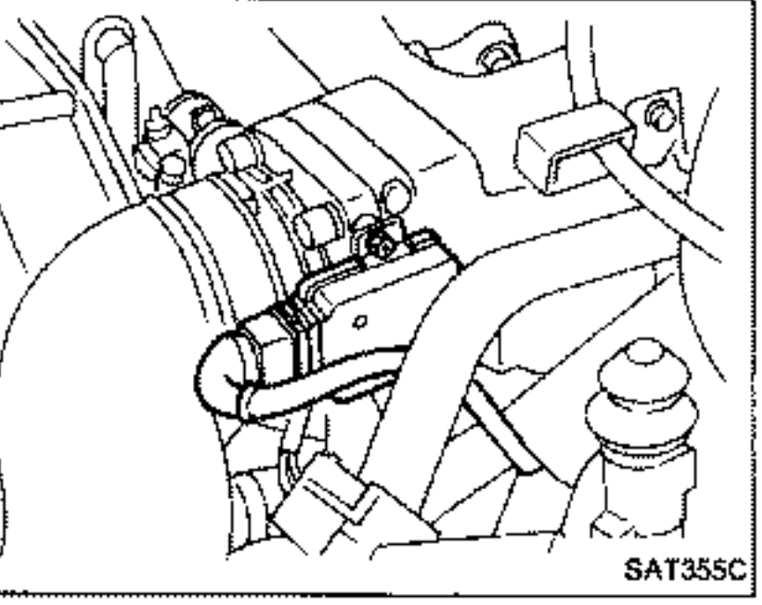

3

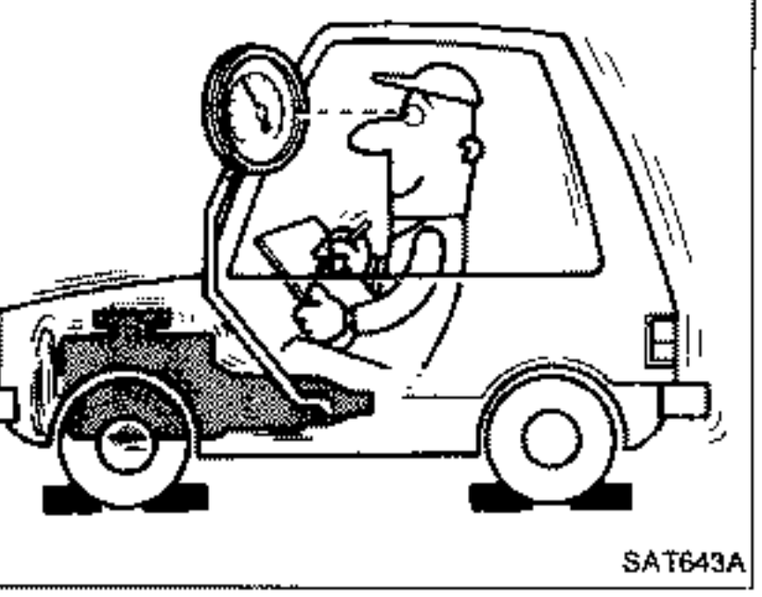

4

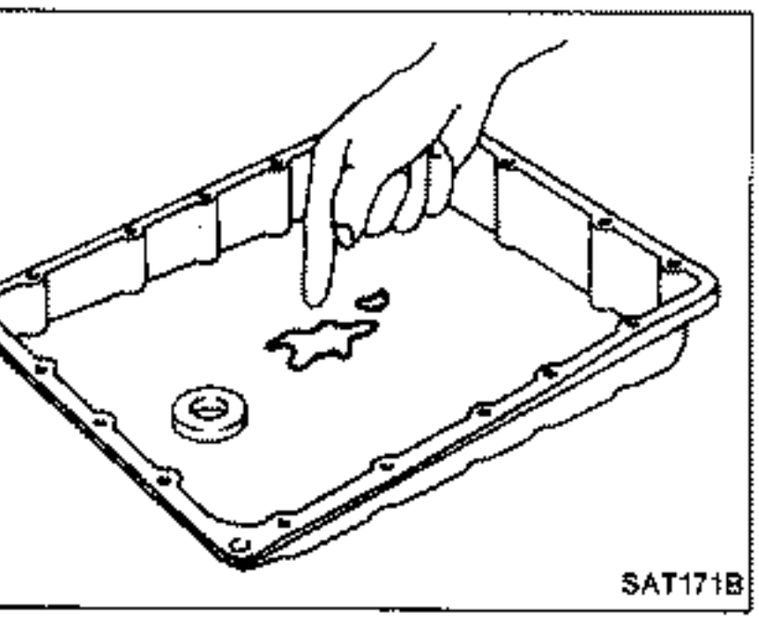

Diagnostic Procedure 8

SYMPTOM: Vehicle cannot be started from D_1 on Cruise test — Part 1.

Is Diagnostic Procedure 7 O.K.? — No → Go to Diagnostic Procedure 7.

Yes ↓

1 Does self-diagnosis show damage to revolution sensor, speed sensor, shift solenoid A or B after cruise test? — Yes → Check damaged circuit. — Refer to "Self-diagnosis".

No ↓

2 Check throttle sensor. — Refer to section EF & EC. — N.G. → Repair or replace throttle sensor.

O.K. ↓

3 Check line pressure at stall point with selector lever in "D" range. — Refer to "PRESSURE TESTING". — N.G. →

1. Remove control valve assembly. — Refer to "ON-VEHICLE SERVICE".
2. Check the following items.
- Shift valve A
- Shift valve B
- Shift solenoid A
- Shift solenoid B
- Pilot valve
- Pilot filter

O.K. ↓

4
1. Remove oil pan.
2. Check A/T fluid condition.

— O.K. → (to Check again)

N.G. →

3. Disassemble A/T.
4. Check the following items.
- Forward clutch assembly
- Forward one-way clutch
- Low one-way clutch
- High clutch assembly
- Torque converter
- Oil pump assembly

O.K. → (to Check again)

Check again. — N.G. →

1. Perform A/T control unit input/output signal inspection.
2. If N.G., recheck A/T control unit pin terminals for damage or connection of A/T control unit harness connector.

O.K. ↓

INSPECTION END

Diagnostic Procedure 9

SYMPTOM: **A/T does not shift from D_1 to D_2 at the specified speed.**
A/T does not shift from D_4 to D_2 when depressing accelerator pedal fully at the specified speed.

1

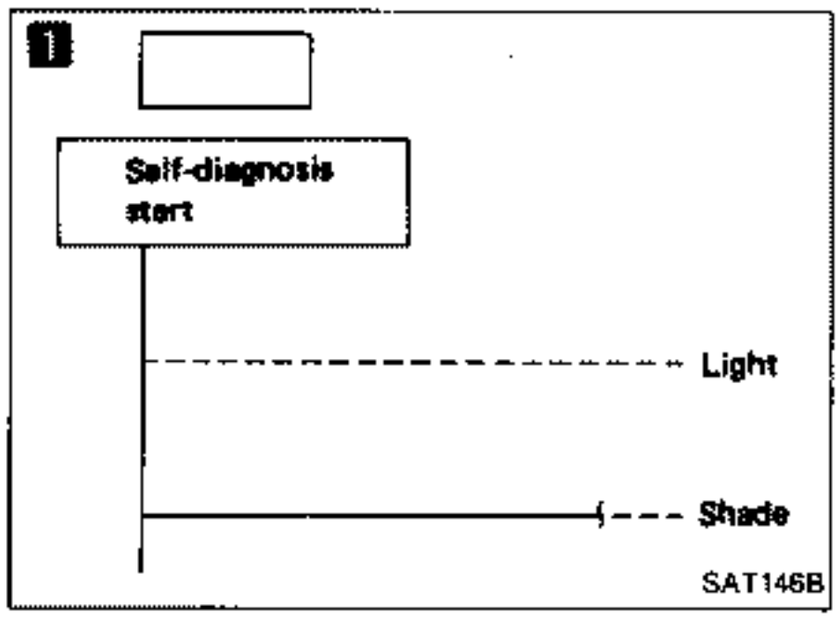

2

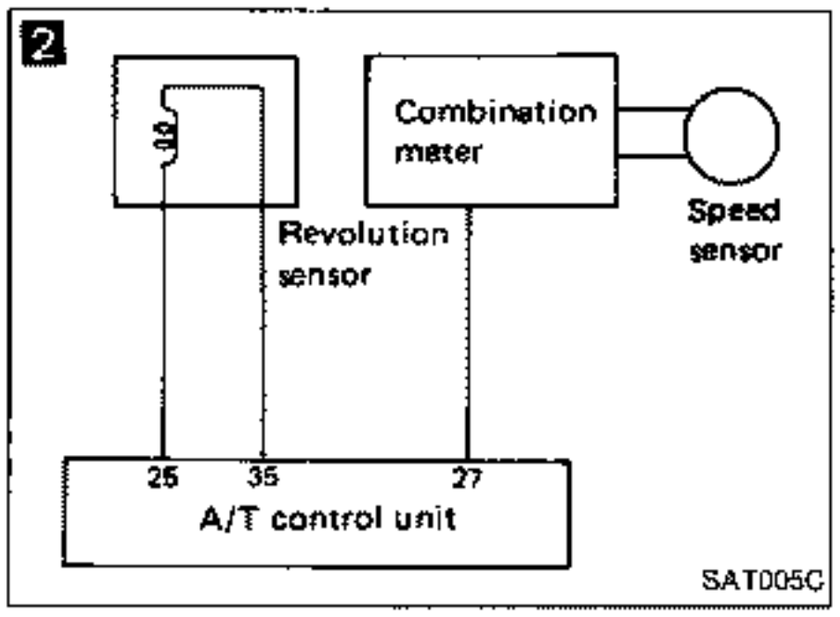

3

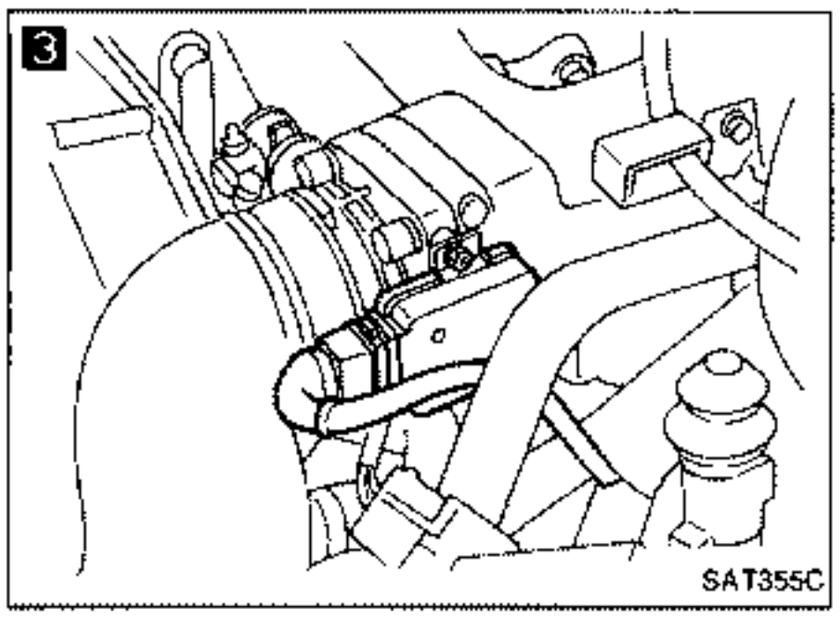

4

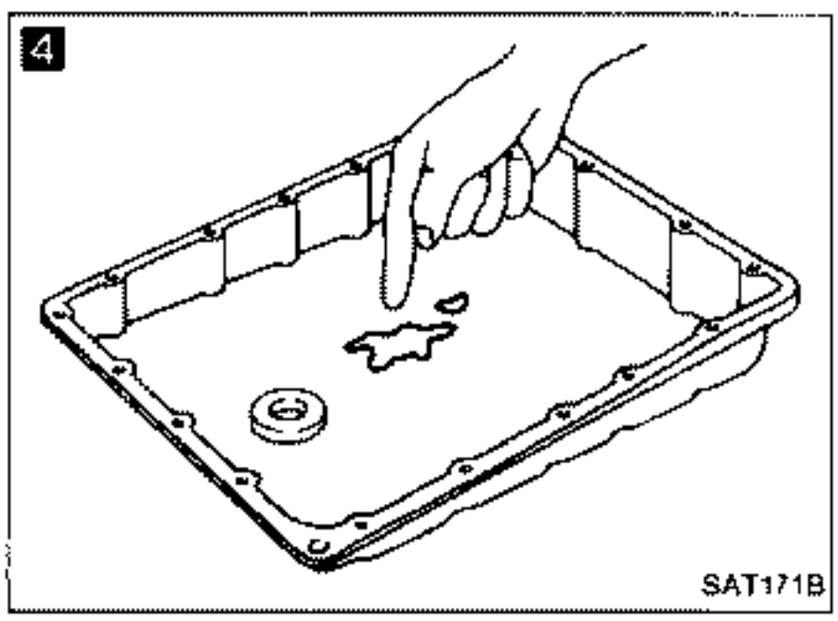

5

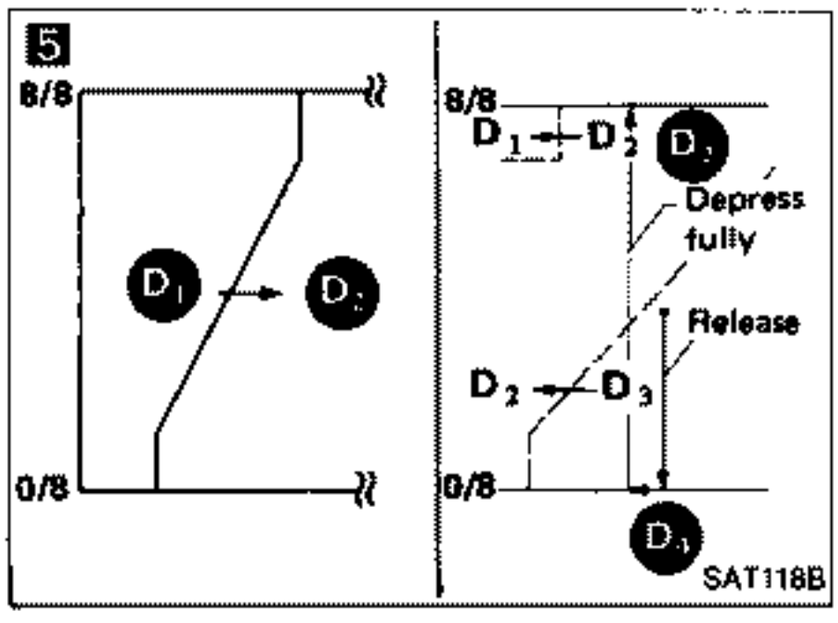

Are Diagnostic Procedures 7 and 8 O.K.?

No → Go to Diagnostic Procedure 7 or 8.

Yes ↓

Does "E.C.U. INPUT SIGNALS" show damage to inhibitor switch circuit?

Yes → Check inhibitor switch circuit. — Refer to "Self-diagnosis".

OR

1 Does self-diagnosis show damage to inhibitor switch circuit?

No ↓

2 Check revolution sensor and speed sensor circuit. — Refer to "Self-diagnosis".

N.G. → Repair or replace revolution sensor and speed sensor circuits.

O.K. ↓

3 Check throttle sensor. — Refer to section EF & EC.

N.G. → Repair or replace throttle sensor.

O.K. ↓

4 1. Remove oil pan.
2. Check A/T fluid condition.

N.G. →
1. Remove control valve. — Refer to "ON-VEHICLE SERVICE".
2. Check the following items.
- Shift valve A
- Shift solenoid A
- Pilot valve
- Pilot filter

O.K. ↓

3. Disassemble A/T.
4. Check the following items.
- Servo piston assembly
- Brake band
- Oil pump assembly

O.K. ↓

5 Check again.

N.G. →
1. Perform A/T control unit input/output signal inspection.
2. If N.G., recheck A/T control unit pin terminals for damage or connection of A/T control unit harness connector.

O.K. ↓

INSPECTION END

1

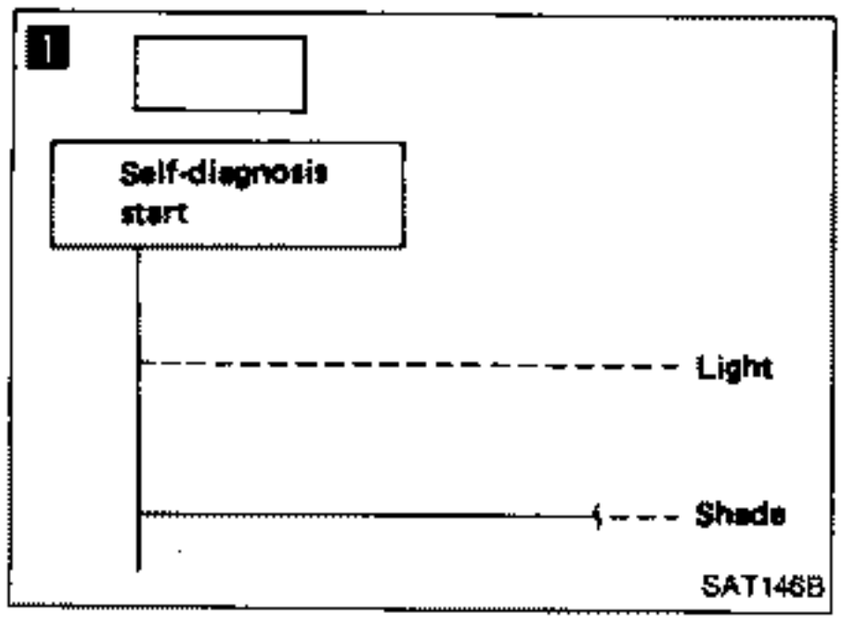

2

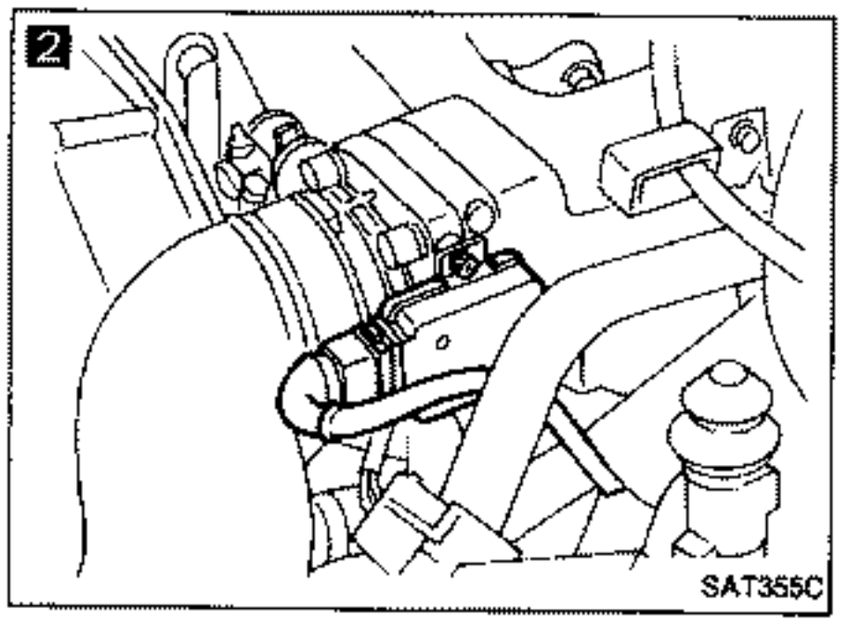

3

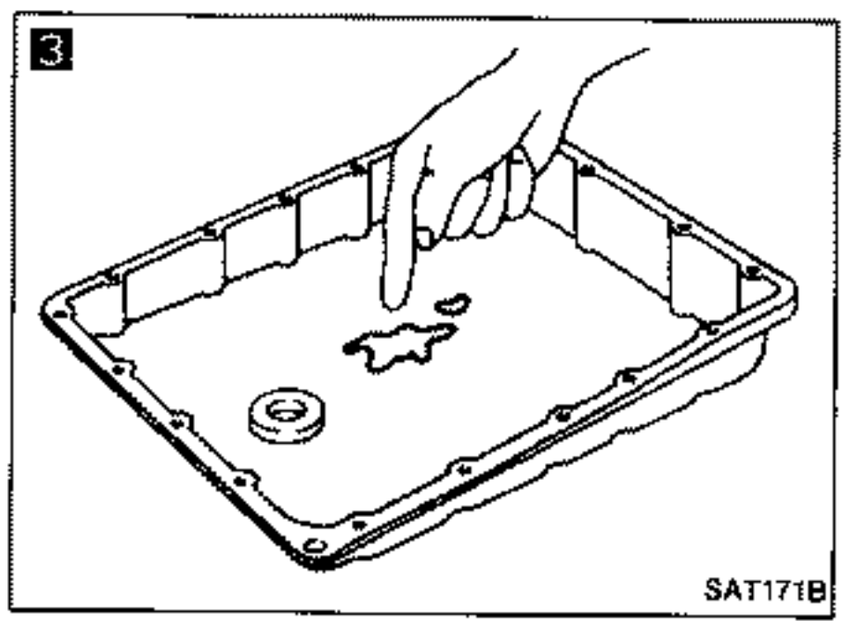

4

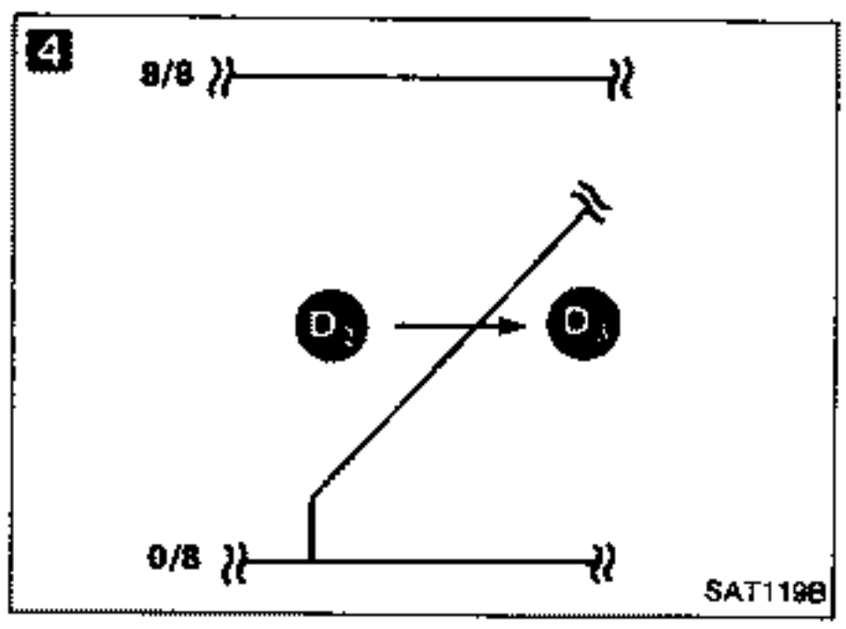

Diagnostic Procedure 10

SYMPTOM: A/T does not shift from D_2 to D_3 at the specified speed.

Are Diagnostic Procedures 7 and 8 O.K.?

No → Go to Diagnostic Procedure 7 or 8.

Yes ↓

Does "E.C.U. INPUT SIGNALS" show damage to inhibitor switch circuit?

Yes → Check inhibitor switch circuit. — Refer to "Self-diagnosis".

OR

1

Does self-diagnosis show damage to inhibitor switch circuit?

No ↓

2

Check throttle sensor. — Refer to section EF & EC.

N.G. → Repair or replace throttle sensor.

O.K. ↓

3

1. Remove oil pan.
2. Check A/T fluid condition.

N.G. →
1. Remove control valve assembly. — Refer to "ON-VEHICLE SERVICE".
2. Check the following items.
- Shift valve B
- Shift solenoid B
- Pilot valve
- Pilot filter

O.K. ↓

O.K. →
3. Disassemble A/T.
4. Check the following items.
- Servo piston assembly
- High clutch assembly
- Oil pump assembly

O.K. ↓

4

Check again.

N.G. →
1. Perform A/T control unit input/output signal inspection.
2. If N.G., recheck A/T control unit pin terminals for damage or connection of A/T control unit harness connector.

O.K. ↓

INSPECTION END

1

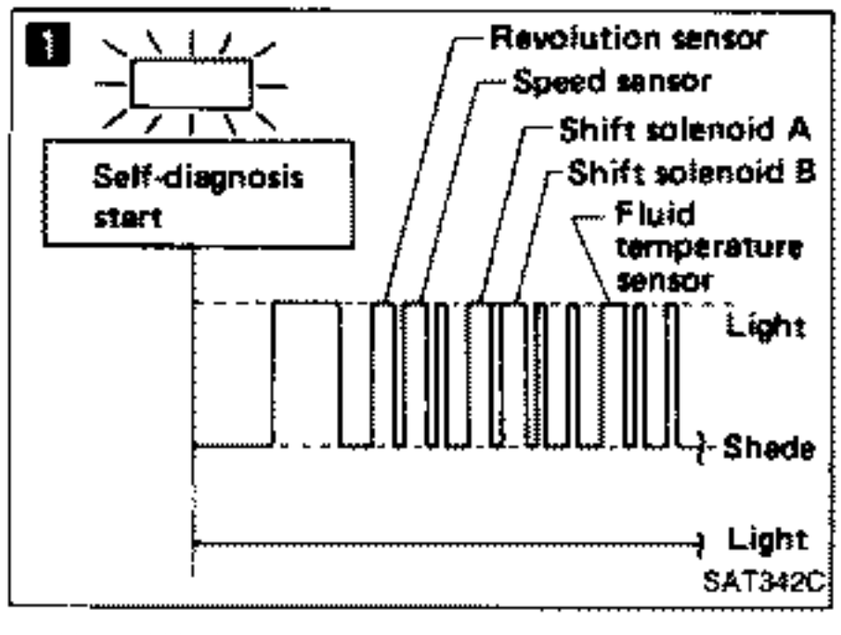

2

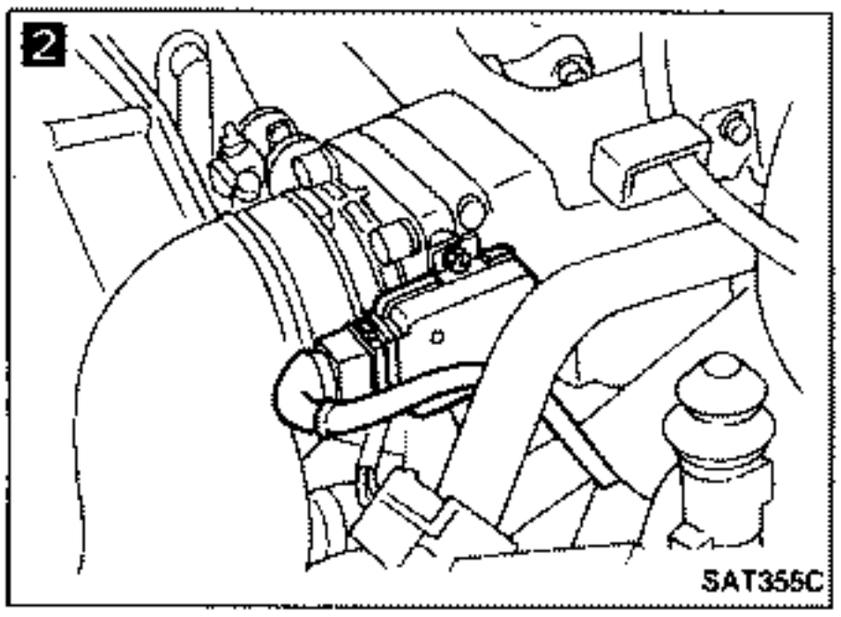

3

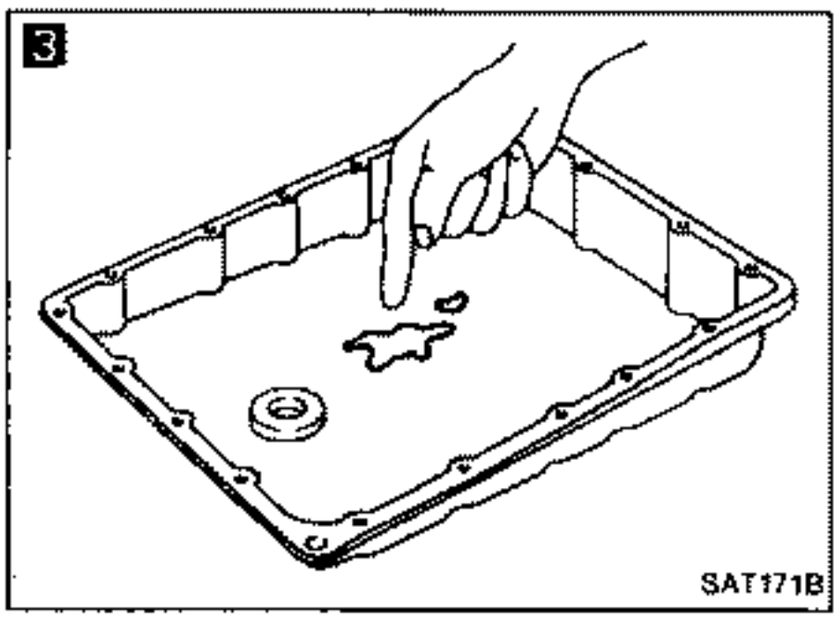

4

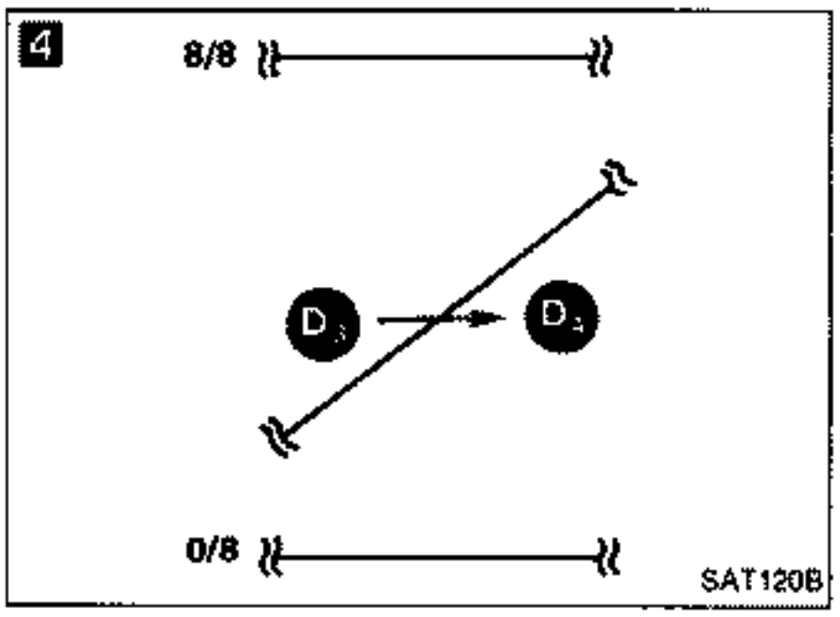

Diagnostic Procedure 11

SYMPTOM: A/T does not shift from D_3 to D_4 at the specified speed.

Are Diagnostic Procedures 7 and 8 O.K.?

No → Go to Diagnostic Procedure 7 or 8.

Yes ↓

1 Does self-diagnosis show damage to inhibitor switch, overdrive switch, shift solenoid A, B, revolution sensor, speed sensor or fluid temperature sensor circuit after cruise test?

Yes → Check damaged circuit. — Refer to "Self-diagnosis".

No ↓

2 Check throttle sensor. — Refer to section EF & EC.

N.G. → Repair or replace throttle sensor.

O.K. ↓

3 1. Remove oil pan.
2. Check A/T fluid condition.

N.G. →
1. Remove control valve assembly. — Refer to "ON-VEHICLE SERVICE".
2. Check the following items.
- Shift valve B
- Overrun clutch control valve
- Shift solenoid B
- Pilot valve
- Pilot filter

O.K. →
3. Disassemble A/T.
4. Check the following items.
- Servo piston assembly
- Brake band
- Torque converter
- Oil pump assembly

O.K. ↓

4 Check again.

N.G. →
1. Perform A/T control unit input/output signal inspection.
2. If N.G., recheck A/T control unit pin terminals for damage or connection of A/T control unit harness connector.

O.K. ↓

INSPECTION END

1

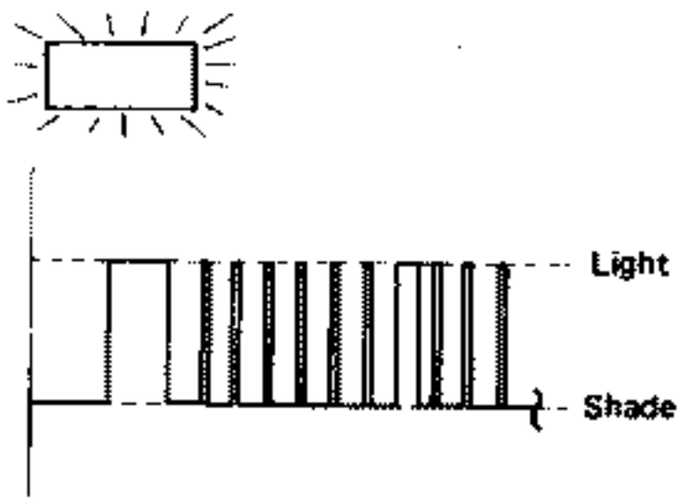

Diagnostic Procedure 12

SYMPTOM: A/T does not perform lock-up at the specified speed.

1

Does self-diagnosis show damage to lock-up solenoid circuit after cruise test?

Yes → Check lock-up solenoid circuit. — Refer to "Self-diagnosis".

No ↓

2

Check throttle sensor. — Refer to section EF & EC.

N.G. → Repair or replace throttle sensor.

O.K. ↓

1. Remove control valve. — Refer to "ON-VEHICLE SERVICE".
2. Check the following items.
- Lock-up control valve
- Shuttle shift valve D
- Torque converter relief valve
- Lock-up solenoid
- Pilot valve
- Pilot filter

N.G. → Repair or replace damaged parts.

O.K. ↓

3

Check again.

N.G. → 1. Perform A/T control unit input/output signal inspection.
2. If N.G., recheck A/T control unit pin terminals for damage or connection of A/T control unit harness connector.

O.K. ↓

INSPECTION END

2

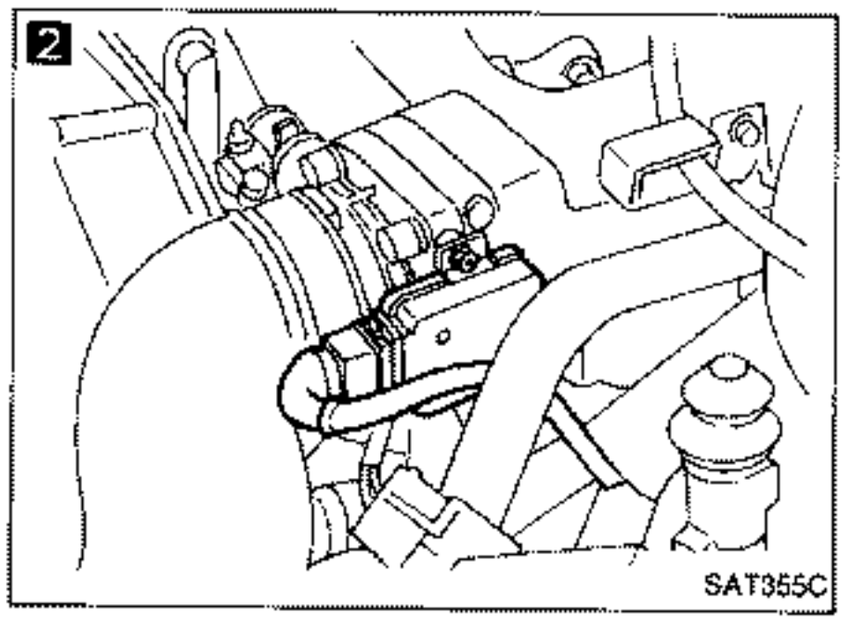

3

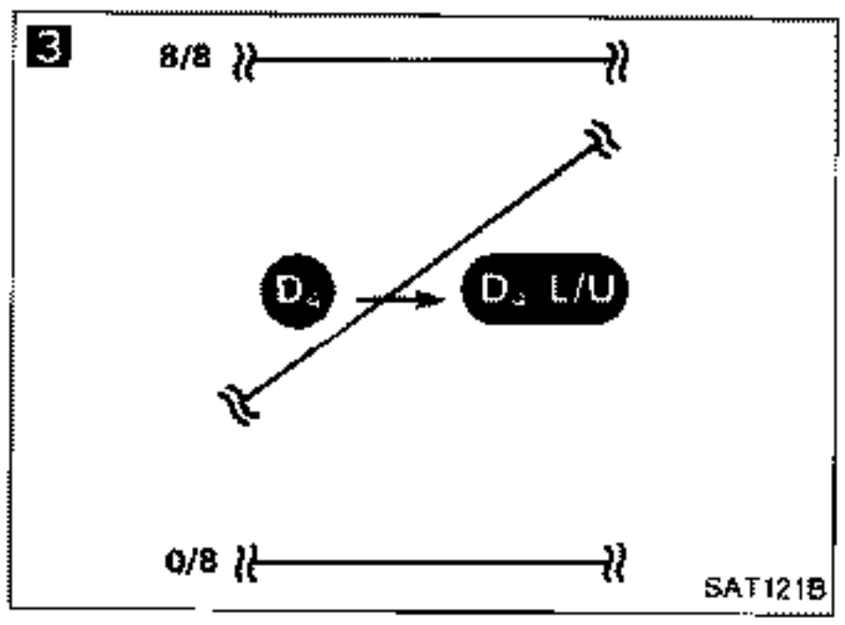

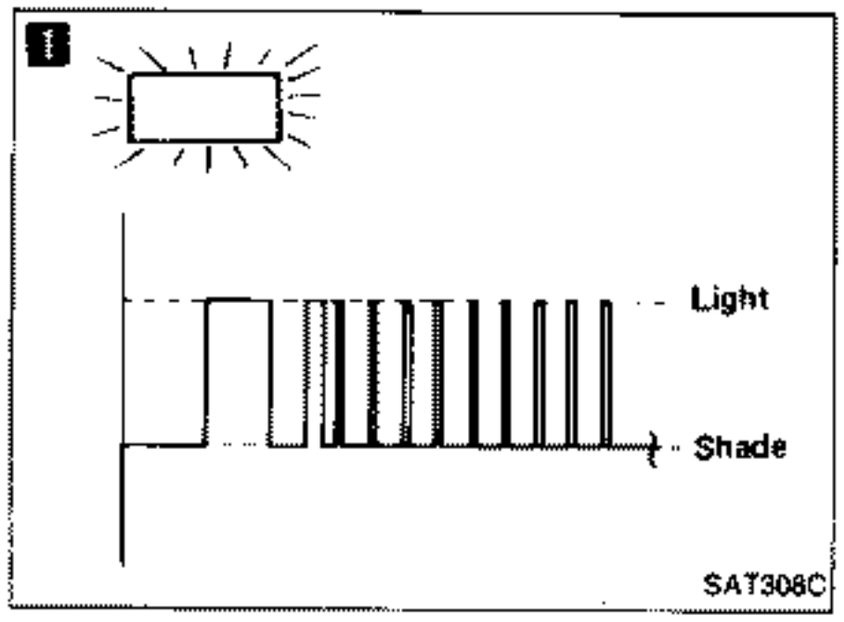

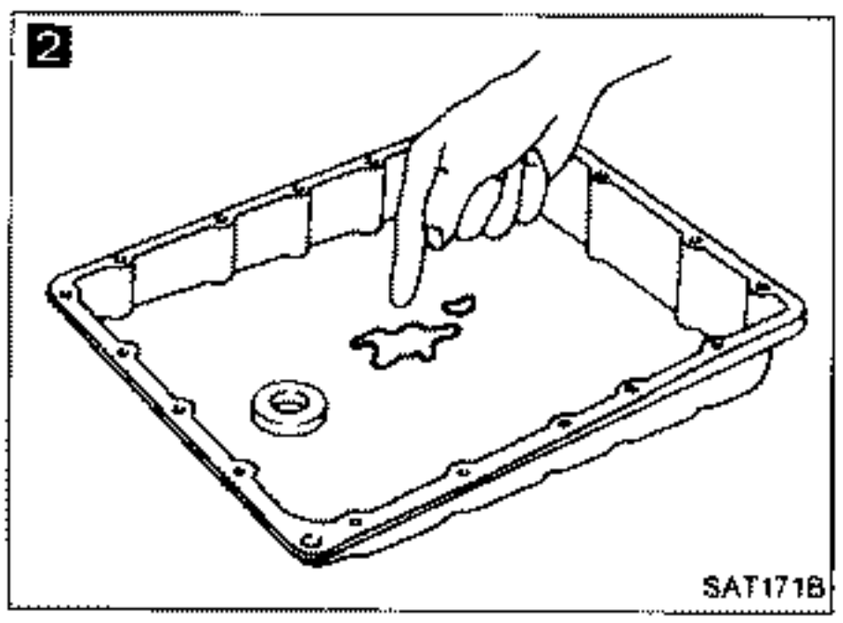

Diagnostic Procedure 13

SYMPTOM: A/T does not hold lock-up condition for more than 30 seconds.

1 Does self-diagnosis show damage to engine revolution signal circuit after cruise test?
- Yes → Check engine revolution signal circuit. — Refer to "Self-diagnosis".
- No ↓

2
1. Remove oil pan.
2. Check A/T fluid condition.
- N.G. → 1. Remove control valve assembly. — Refer to "ON-VEHICLE SERVICE". 2. Check the following items.
  - Lock-up control valve
  - Pilot valve
  - Pilot filter
  3. Disassemble A/T.
  4. Check torque converter and oil pump assembly.
- O.K. ↓

Check again.
- N.G. → 1. Perform A/T control unit input/output signal inspection. 2. If N.G., recheck A/T control unit pin terminals for damage or connection of A/T control unit harness connector.
- O.K. ↓

INSPECTION END

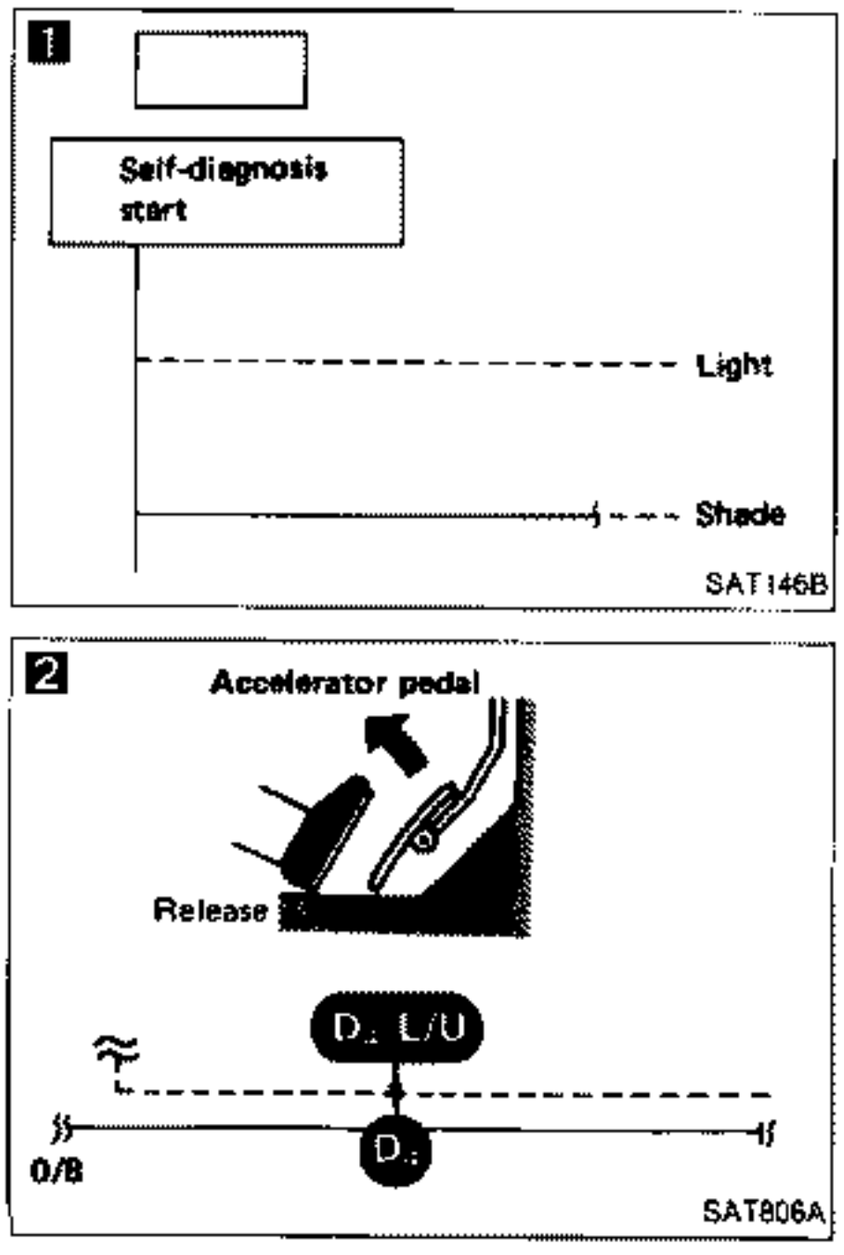

Diagnostic Procedure 14

SYMPTOM: Lock-up is not released when accelerator pedal is released.

Does "E.C.U. INPUT SIGNALS" show damage to idle switch circuit?
- Yes → Check idle switch circuit. — Refer to "Self-diagnosis".

— OR —

1 Does self-diagnosis show damage to idle switch circuit?
- No ↓

2
Check again.
- N.G. → 1. Perform A/T control unit input/output signal inspection. 2. If N.G., recheck A/T control unit pin terminals for damage or connection of A/T control unit harness connector.
- O.K. ↓

INSPECTION END

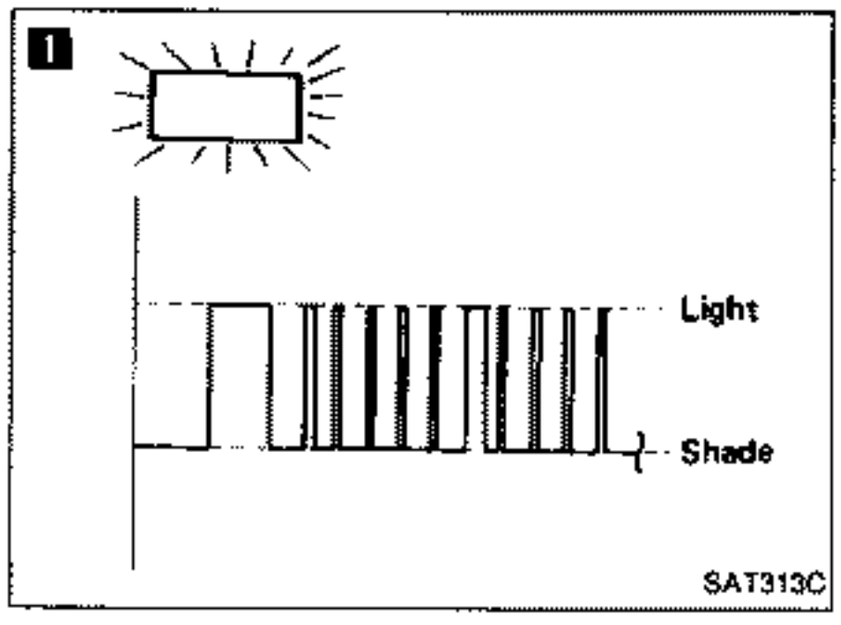

Diagnostic Procedure 15

SYMPTOM: **Engine speed does not return to idle smoothly when A/T is shifted from D_4 to D_3 with accelerator pedal released.**
Vehicle does not decelerate by engine brake when changing overdrive switch to "OFF" position with accelerator pedal released.
Vehicle does not decelerate by engine brake when changing selector lever from "D" to "2" range with accelerator pedal released.

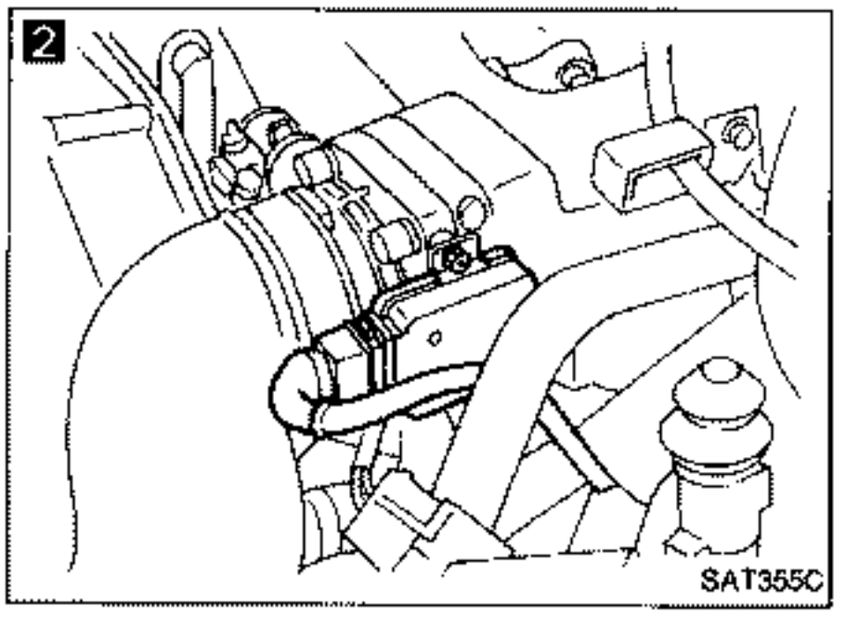

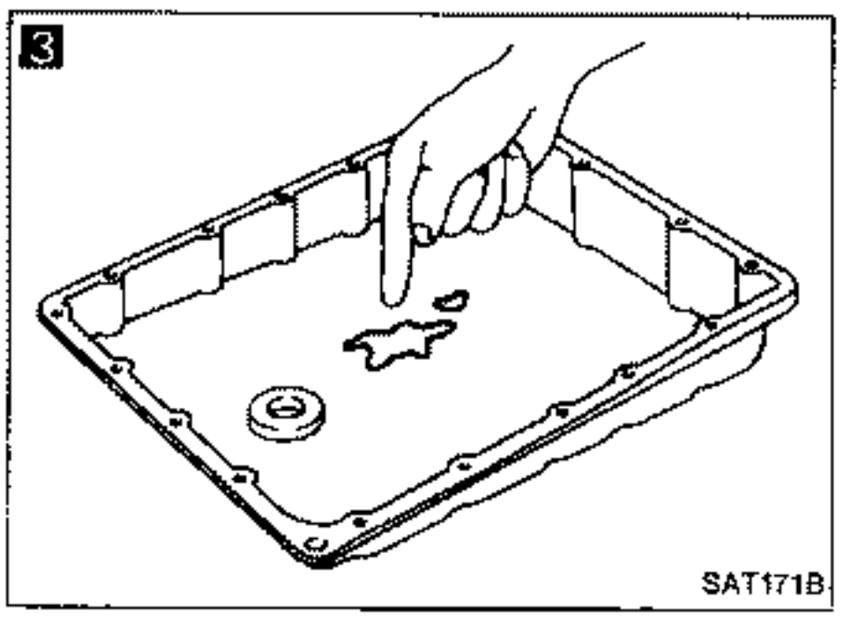

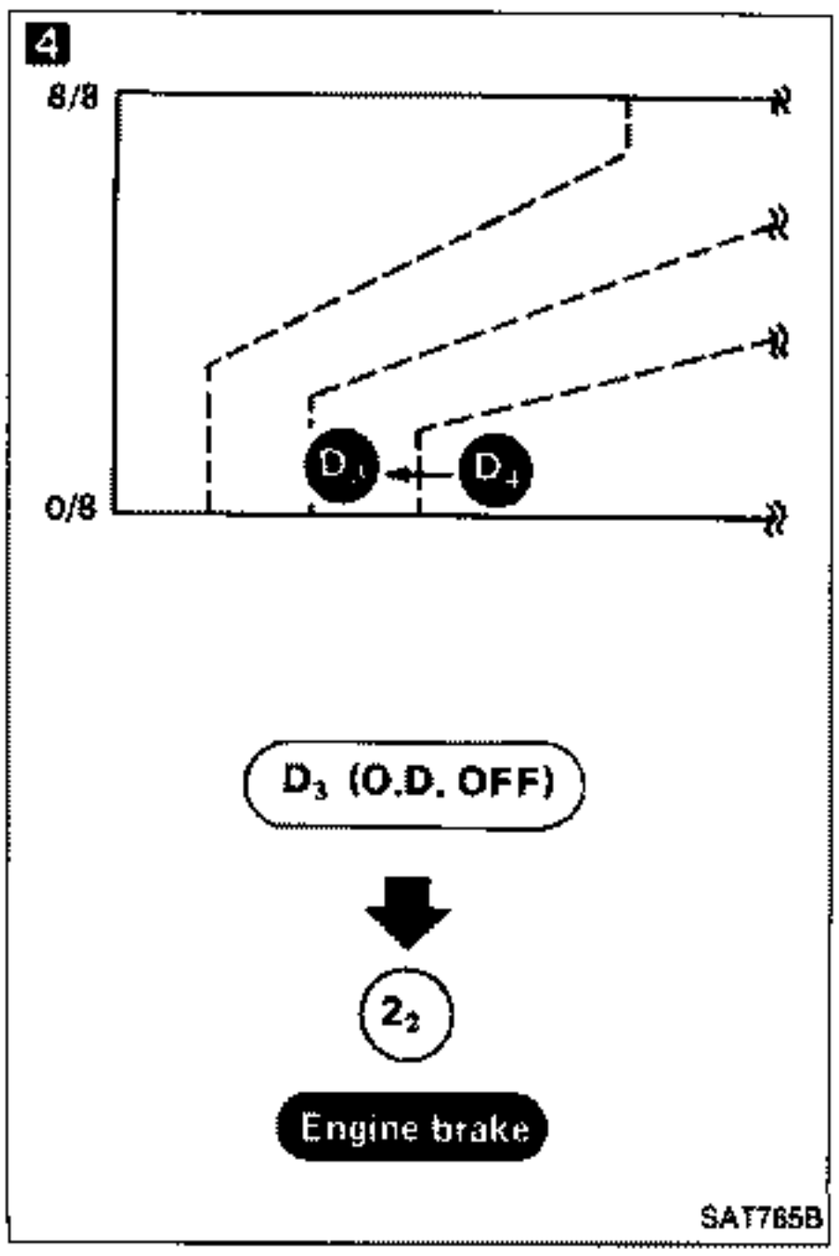

1
Does self-diagnosis show damage to overrun clutch solenoid circuit after cruise test?
Yes → Check overrun clutch solenoid circuit. — Refer to "Self-diagnosis".
No ↓

2
Check throttle sensor. — Refer to section EF & EC.
N.G. → Repair or replace throttle sensor.
O.K. ↓

3
1. Remove oil pan.
2. Check A/T fluid condition.

N.G. → 1. Remove control valve assembly. — Refer to "ON-VEHICLE SERVICE".
2. Check the following items.
- Overrun clutch control valve
- Overrun clutch reducing valve
- Overrun clutch solenoid

O.K. → 3. Disassemble A/T.
4. Check the following items.
- Overrun clutch assembly
- Oil pump assembly

O.K. ↓

4
Check again.
N.G. → 1. Perform A/T control unit input/output signal inspection.
2. If N.G., recheck A/T control unit pin terminals for damage or connection of A/T control unit harness connector.
O.K. ↓

INSPECTION END

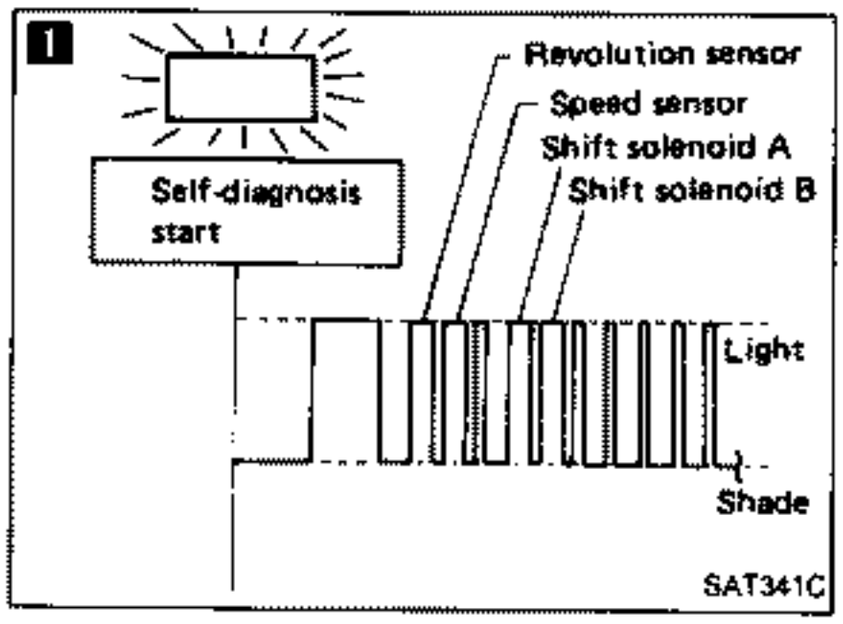

Diagnostic Procedure 16

SYMPTOM: Vehicle does not start from D_1 on Cruise test — Part 2.

1

Does self-diagnosis show damage to revolution sensor, speed sensor, shift solenoid A or B after cruise test?

Yes → Check damaged circuit. — Refer to "Self-diagnosis".

No

Check again.

N.G. →
1. Perform A/T control unit input/output signal inspection.
2. If N.G., recheck A/T control unit pin terminals for damage or connection of A/T control unit harness connector.

O.K.

Go to Diagnostic Procedure 8.

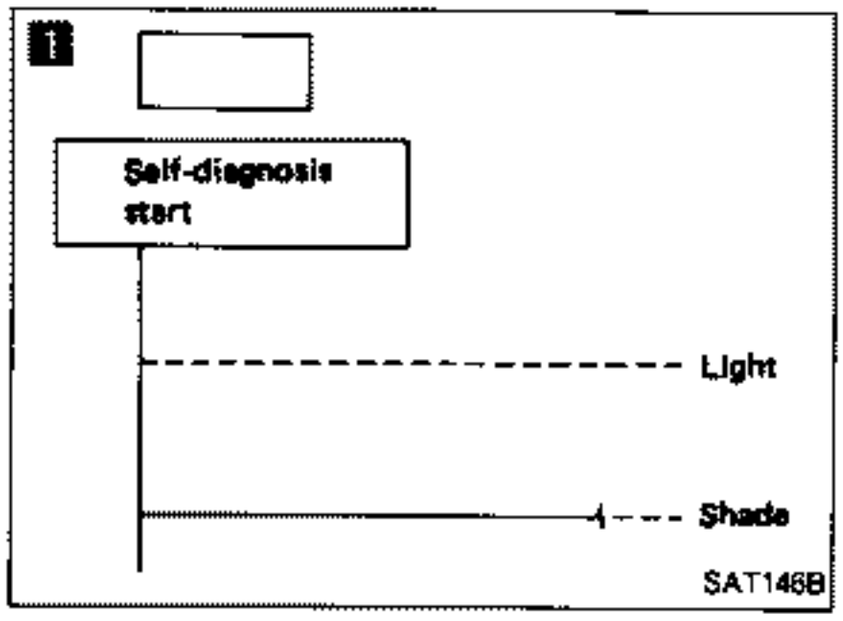

Diagnostic Procedure 17

SYMPTOM: A/T does not shift from D_4 to D_3 when changing overdrive switch to "OFF" position.

Does "E.C.U. INPUT SIGNALS" show damage to overdrive switch circuit?

Yes → Check overdrive switch circuit. — Refer to "Self-diagnosis".

— OR —

1 Does self-diagnosis show damage to overdrive switch circuit?

No

Go to Diagnostic Procedure 10.

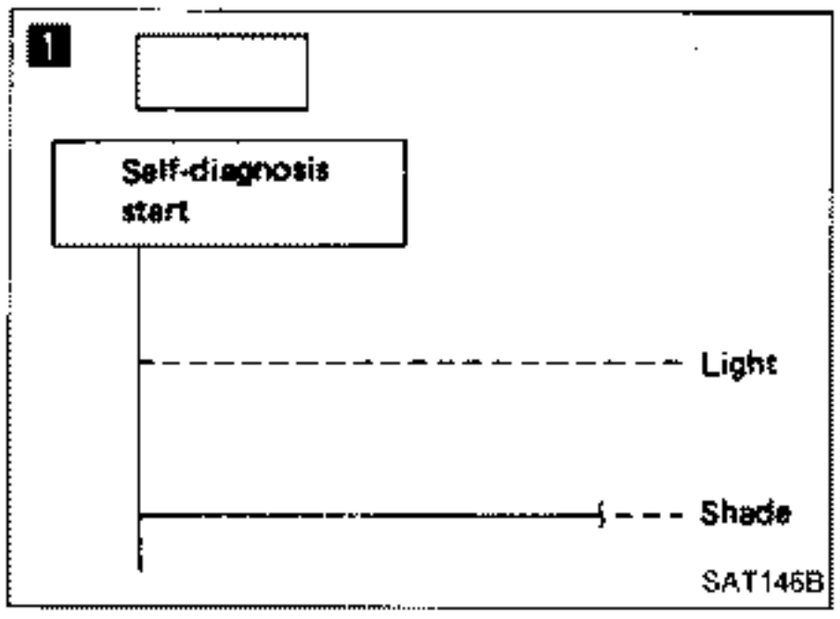

Diagnostic Procedure 18

SYMPTOM: A/T does not shift from D_3 to 2_2 when changing selector lever from "D" to "2" range.

Does "E.C.U. INPUT SIGNALS" show damage to inhibitor switch circuit? — Yes → Check inhibitor switch circuit. — Refer to "Self-diagnosis".

OR

1 Does self-diagnosis show damage to inhibitor switch circuit? — No → Go to Diagnostic Procedure 9.

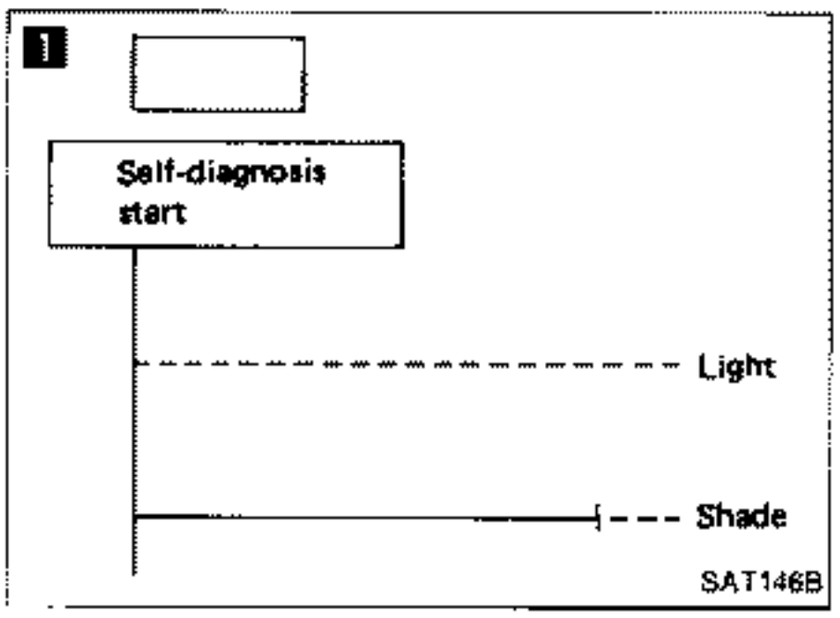

Diagnostic Procedure 19

SYMPTOM: A/T does not shift from 2_2 to 1_1 when changing selector lever from "2" to "1" range.

Does "E.C.U. INPUT SIGNALS" show damage to inhibitor switch circuit? — Yes → Check inhibitor switch circuit. — Refer to "Self-diagnosis".

OR

1 Does self-diagnosis show damage to inhibitor switch circuit? — No →

2 Check again. — N.G. →
1. Perform A/T control unit input/output signal inspection.
2. If N.G., recheck A/T control unit pin terminals for damage or connection of A/T control unit harness connector.

O.K. → **INSPECTION END**

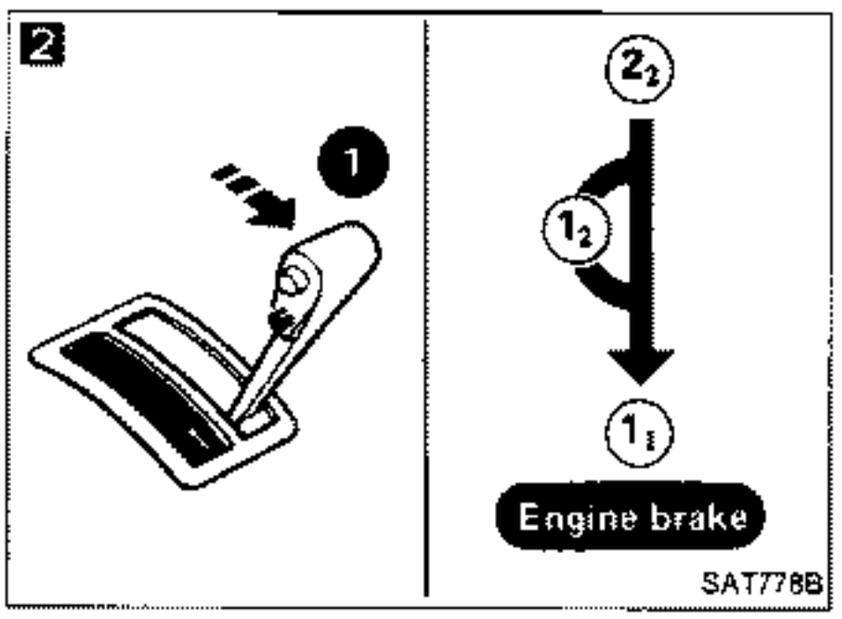

Diagnostic Procedure 20

SYMPTOM: Vehicle does not decelerate by engine brake when shifting from 2_2 (1_2) to 1_1.

Is diagnostic procedure 6 O.K.? — No → Go to Diagnostic Procedure 6.

Yes → Go to Diagnostic Procedure 15.

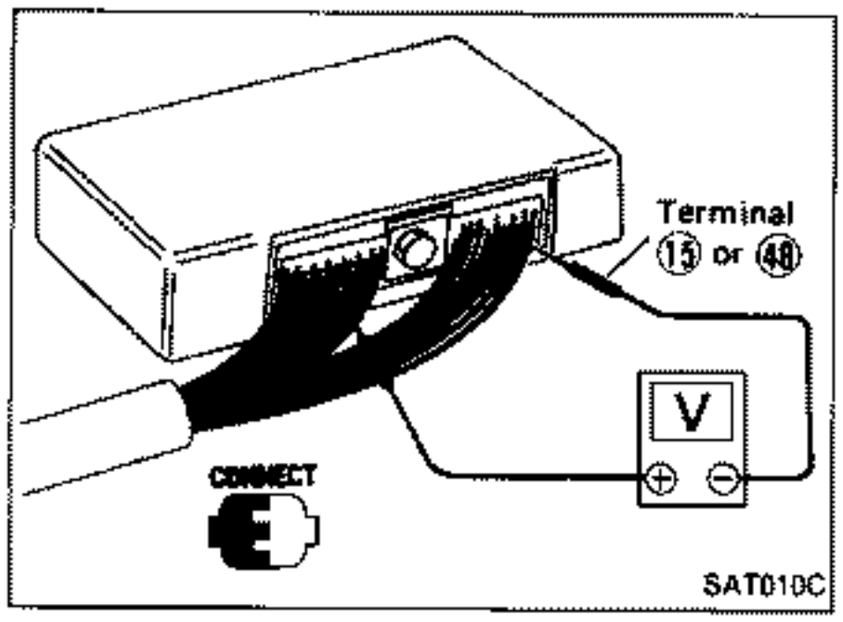

Electrical Components Inspection

INSPECTION OF A/T CONTROL UNIT

- Measure voltage between each terminal and terminal ⑮ or ㊽ by following "A/T CONTROL UNIT INSPECTION TABLE".

- Pin connector terminal layout.

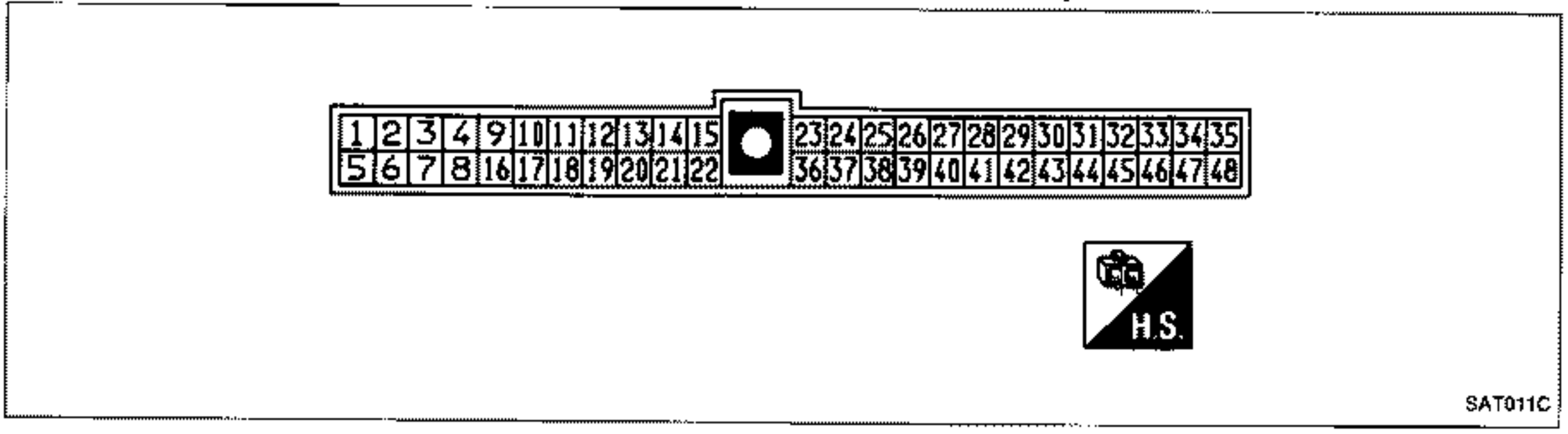

Z.ONE.DATSUN

Electrical Components Inspection (Cont'd)

A/T CONTROL UNIT INSPECTION TABLE
(Data are reference values.)

Terminal No.	Item	Condition		Judgment standard
1	Line pressure solenoid		When accelerator pedal is released after warming up engine.	1.5 - 2.5V
			When accelerator pedal is depressed fully after warming up engine.	0.5V or less
2	Line pressure solenoid (with dropping resistor)		When accelerator pedal is released after warming up engine.	5 - 14V
			When accelerator pedal is depressed fully after warming up engine.	0.5V or less
3	A/T check lamp		When A/T check lamp is on.	1V or less
			When A/T check lamp is not on.	Battery voltage
4	Power source		When ignition switch is turned to "ON".	Battery voltage
			When ignition switch is turned to "OFF".	1V or less
5	Lock-up solenoid		When A/T is performing lock-up.	8 - 15V
			When A/T is not performing lock-up.	1V or less
6	Shift solenoid A		When shift solenoid A is operating. (When driving in "D_1" or "D_4".)	Battery voltage
			When shift solenoid A is not operating. (When driving in "D_2" or "D_3".)	1V or less
7	Shift solenoid B		When shift solenoid B is operating. (When driving in "D_1" or "D_2".)	Battery voltage
			When shift solenoid B is not operating. (When driving in "D_3" or "D_4".)	1V or less
8	Overrun clutch solenoid		When timing solenoid is operating. (When driving in "D_1" or "D_4".)	Battery voltage
			When timing solenoid is not operating. (When driving in "D_2" or "D_3".)	1V or less

Electrical Components Inspection (Cont'd)

Terminal No.	Item	Condition	Judgment standard
9	Power source	Same as No. 4	
10*	—	—	—
11	—	—	—
12	—	—	—
13	—	—	—
14	Idle switch (in throttle valve switch)	When accelerator pedal is released after warming up engine.	8 - 15V
		When accelerator pedal is depressed after warming up engine.	1V or less
15	Ground	—	—
16	Inhibitor "1" range switch	When selector lever is set to "1" range.	Battery voltage
		When selector lever is set to other ranges.	1V or less
17	Inhibitor "2" range switch	When selector lever is set to "2" range.	Battery voltage
		When selector lever is set to other ranges.	1V or less
18	Inhibitor "D" range switch	When selector lever is set to "D" range.	Battery voltage
		When selector lever is set to other ranges.	1V or less
19	Inhibitor "N" or "P" range switch	When selector lever is set to "N" range.	Battery voltage
		When selector lever is set to other ranges.	1V or less
20	Inhibitor "R" range switch	When selector lever is set to "R" range.	Battery voltage
		When selector lever is set to other ranges.	1V or less
21	Full throttle switch	When accelerator pedal is depressed more than half-way after warming up engine.	8 - 15V
		When accelerator pedal is released after warming up engine.	1V or less
22	—	—	—





*: This terminal is connected to terminal No. 36 of E.C.C.S. control unit.
When code No. 54 appears during engine self-diagnosis, check line between above terminals for proper continuity.

Electrical Components Inspection (Cont'd)

Terminal No.	Item	Condition		Judgment standard
23	Power source (Back-up)	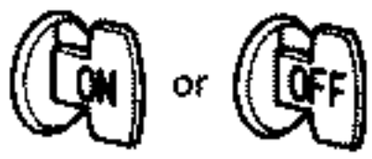	When ignition switch is turned to "OFF".	Battery voltage
			When ignition switch is turned to "ON".	Battery voltage
24	Engine revolution signal		When engine is running at idle speed.	0.9V
			When engine is running at 3,000 rpm.	Approximately 3.7V
25	Revolution sensor (Measure in AC range)		When vehicle is cruising at 30 km/h (19 MPH).	1V or more Voltage rises gradually in response to vehicle speed.
			When vehicle is parked.	0V
26	—		—	—
27	Speed sensor		When vehicle is moving at 2 to 3 km/h (1 to 2 MPH) for 1 m (3 ft) or more.	Vary from 0 to 5V
28	—		—	—
29	—		—	—
30	—		—	—
31	Throttle sensor (Power source)		—	4.5 - 5.5V
32	—		—	—
33	Fluid temperature sensor		When A.T.F. temperature is 20°C (68°F).	Approximately 1.5V
			When A.T.F. temperature is 80°C (176°F).	Approximately 0.5V
34	Throttle sensor		When accelerator pedal is depressed slowly after warming up engine.	Fully-closed throttle: Approximately 0.5V
			Voltage rises gradually in response to throttle opening angle.	Fully-open throttle: Approximately 4V
35	Throttle sensor (Ground)		—	—
36	—		—	—
37	A.S.C.D. cruise signal		When A.S.C.D. cruise is being performed. ("CRUISE" light comes on.)	Battery voltage
			When A.S.C.D. cruise is not being performed. ("CRUISE" light does not come on.)	1V or less

Electrical Components Inspection (Cont'd)

Terminal No.	Item	Condition		Judgment standard
38	—	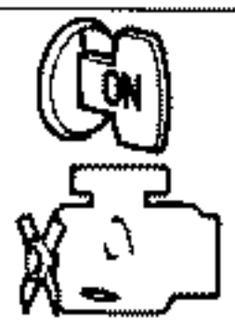	—	—
39	Overdrive switch		When overdrive switch is set in "ON" position.	Battery voltage
			When overdrive switch is set in "OFF" position.	1V or less
40	A.S.C.D. O.D. cut signal		When "ACCEL" set switch on A.S.C.D. cruise is released.	5 - 8V
			When "ACCEL" set switch on A.S.C.D. cruise is applied.	1V or less
41	Kickdown switch		When accelerator pedal is released after warming up engine.	3 - 8V
			When accelerator pedal is depressed fully after warming up engine.	1V or less
42	—		—	—
43	—		—	—
44	—		—	—
45	—		—	—
46	—		—	—
47	—		—	—
48	Ground		—	—

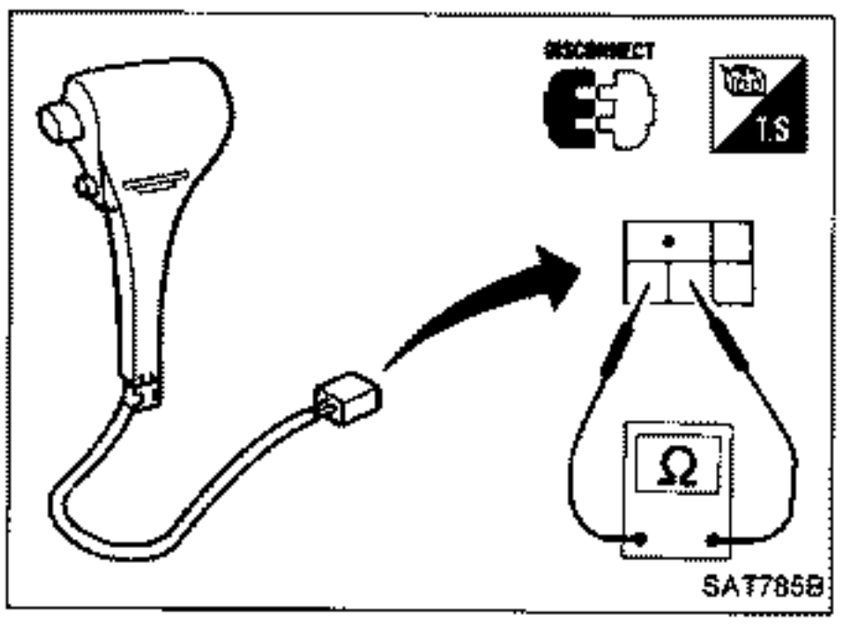

OVERDRIVE SWITCH

- Check continuity between two terminals.

O.D. switch position	Continuity
ON	No
OFF	Yes

Electrical Components Inspection (Cont'd)

INHIBITOR SWITCH

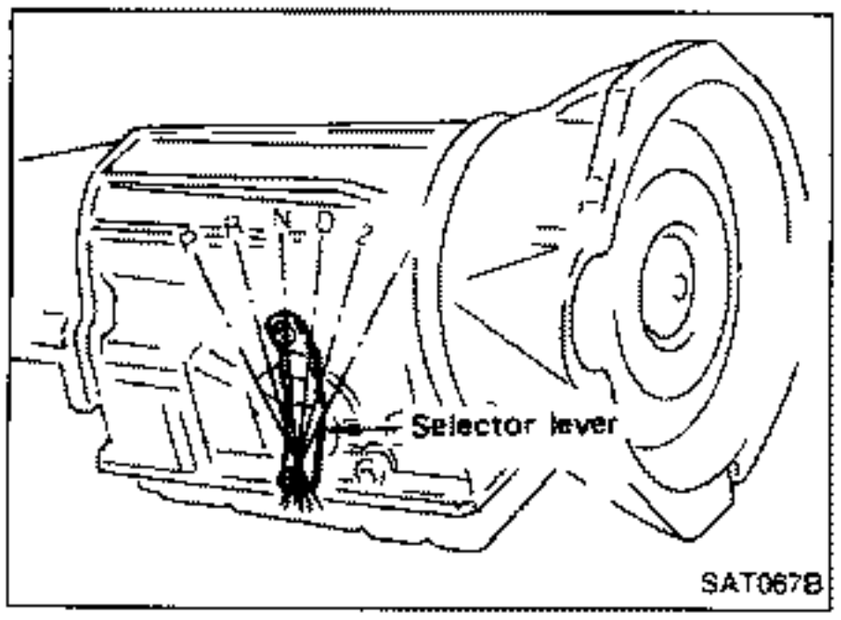

1. Check continuity between terminals ① and ② and between terminals ③ and ④, ⑤, ⑥, ⑦, ⑧, ⑨ while moving selector lever through each range.

Terminal No. / Lever position	①	②	③	④	⑤	⑥	⑦	⑧	⑨
P	○	○	○	○					
R			○		○				
N	○	○	○			○			
D			○				○		
2			○					○	
1			○						○

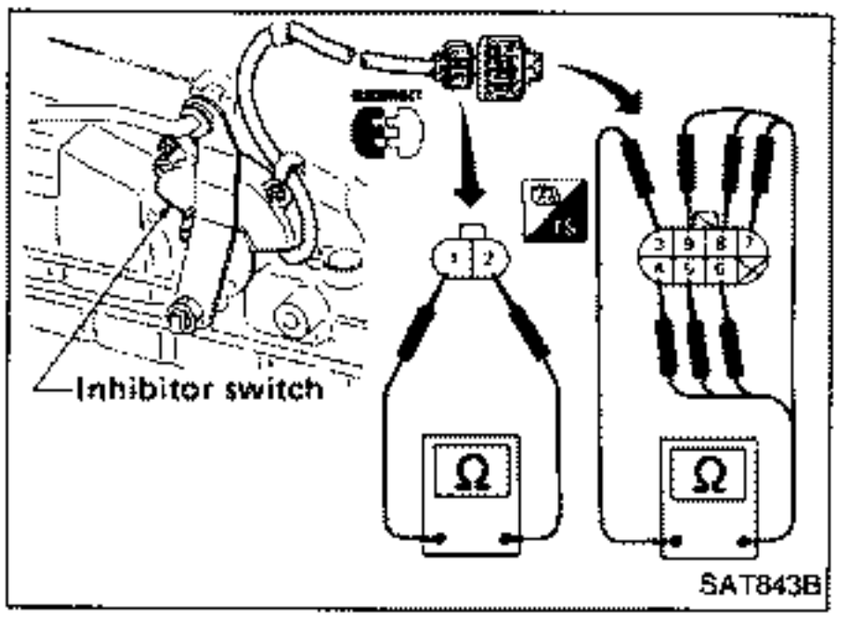

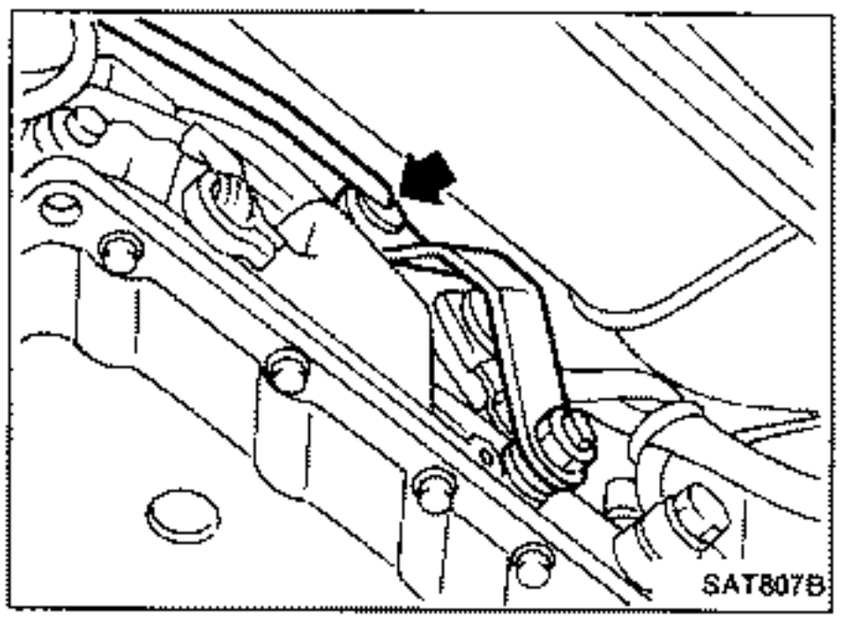

2. If N.G., check again with manual control linkage disconnected from manual shaft of A/T assembly. — Refer to step 1.
3. If O.K. on step 2, adjust manual control linkage. — Refer to "ON-VEHICLE SERVICE".

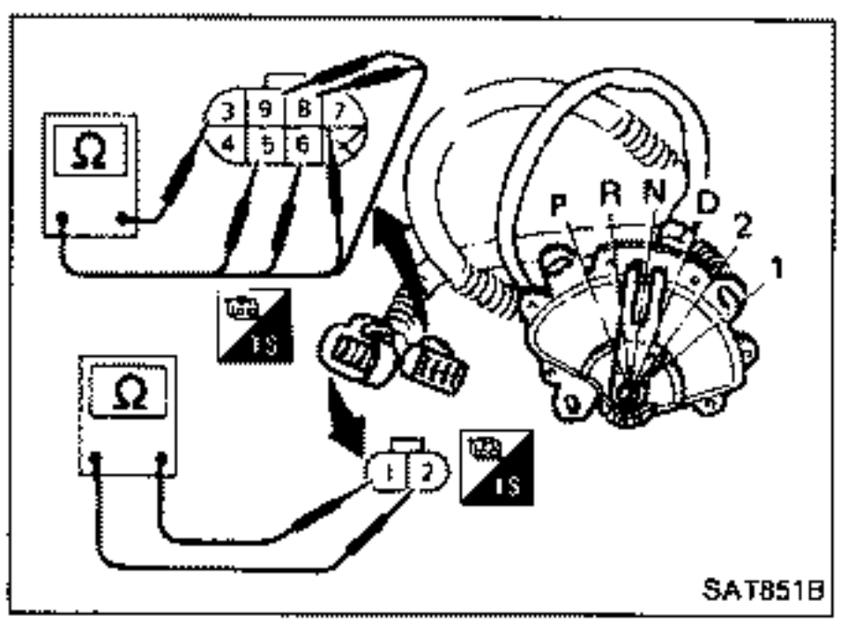

4. If N.G. on step 2, remove inhibitor switch from A/T and check continuity of inhibitor switch terminal. — Refer to step 1.
5. If O.K. on step 4, adjust inhibitor switch. — Refer to "ON-VEHICLE SERVICE".
6. If N.G. on step 4, replace inhibitor switch.

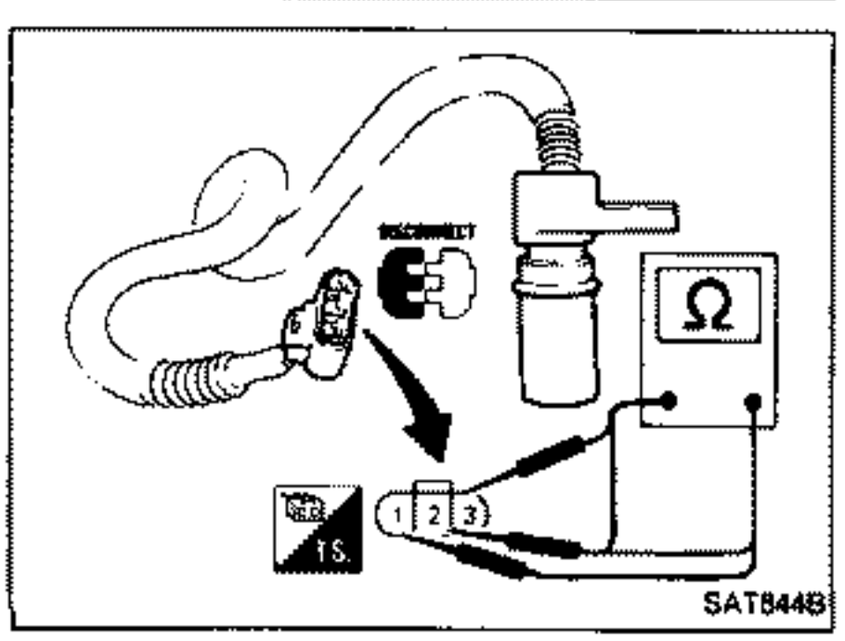

REVOLUTION SENSOR

- For removal and installation, refer to "ON-VEHICLE SERVICE".
- Check resistance between terminals ①, ② and ③.

Terminal No.		Resistance
①	②	500 - 650Ω
②	③	No continuity
①	③	No continuity

Electrical Components Inspection (Cont'd)

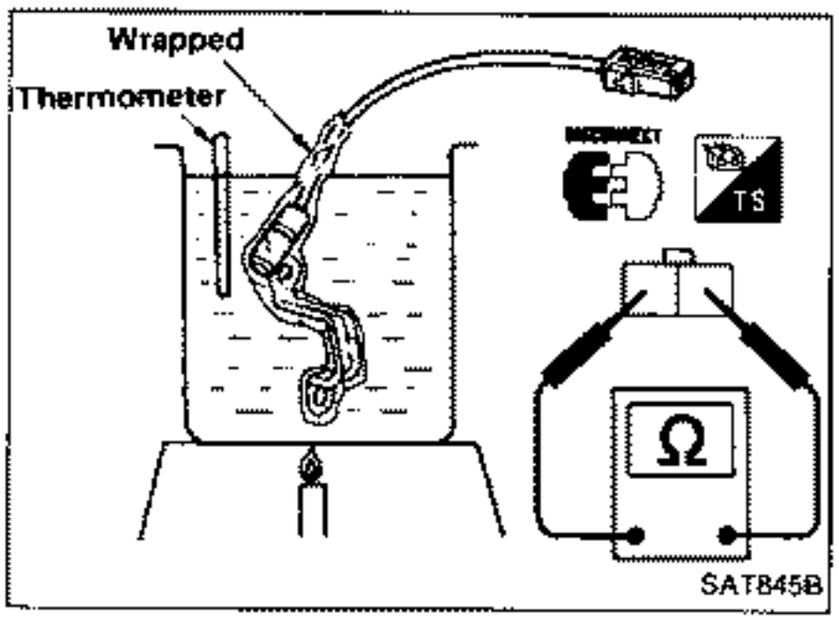

FLUID TEMPERATURE SENSOR

- For removal and installation, refer to "ON-VEHICLE SERVICE".
- Check resistance between two terminals while changing temperature as shown at left.

Temperature °C (°F)	Resistance
20 (68)	Approximately 2.5 kΩ
80 (176)	Approximately 0.3 kΩ

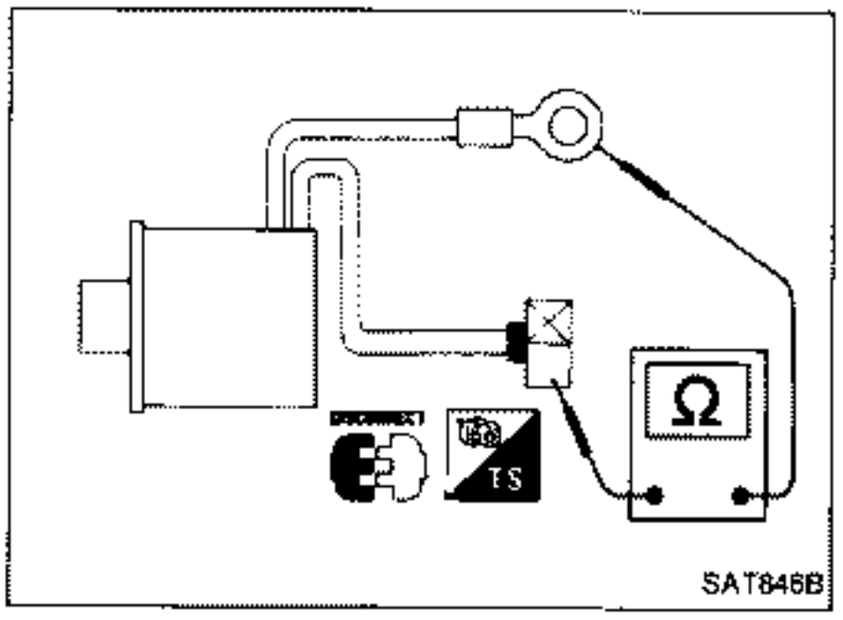

LOCK-UP SOLENOID

- For removal and installation, refer to "ON-VEHICLE SERVICE".
- Check resistance between two terminals.

Resistance:

Lock-up solenoid 10 - 20Ω

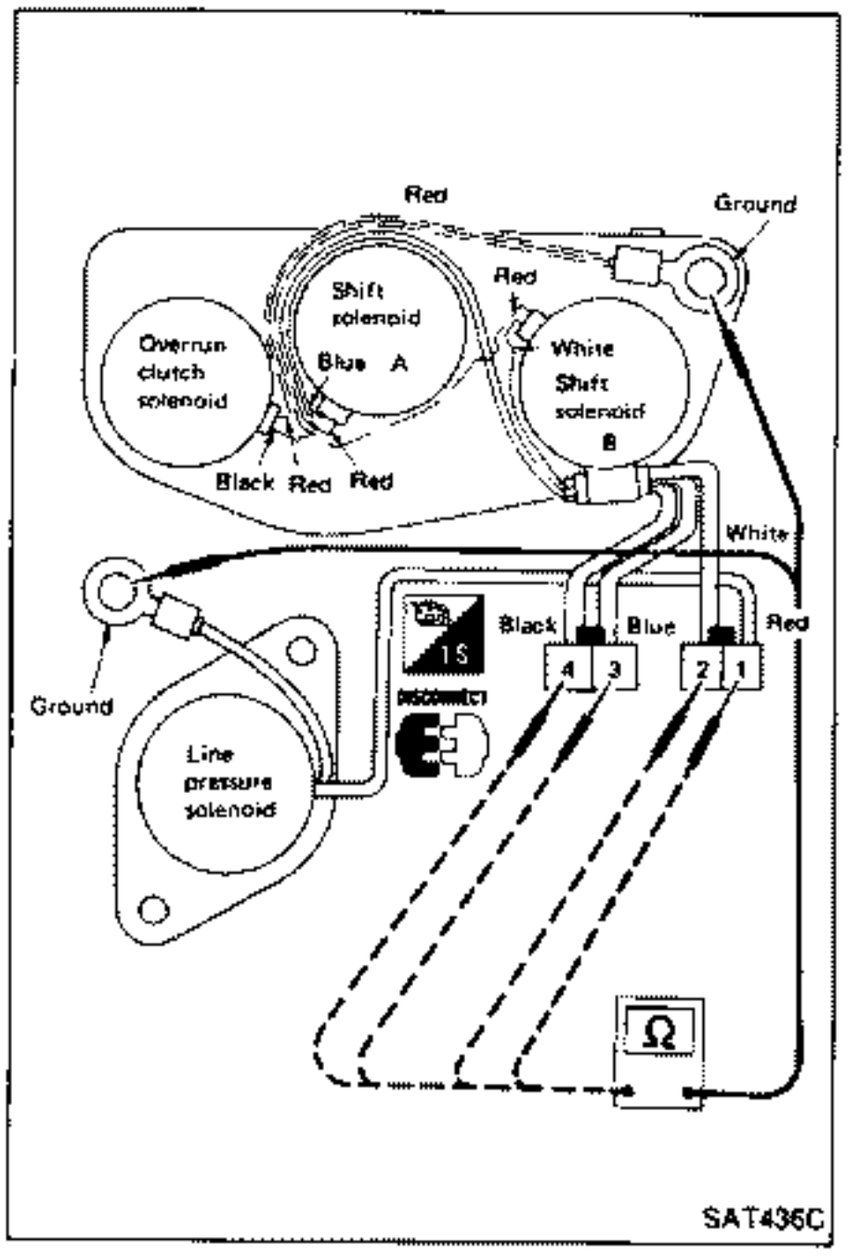

3-UNIT SOLENOID ASSEMBLY (Shift solenoids A, B and overrun clutch solenoid) AND LINE PRESSURE SOLENOID

- For removal and installation, refer to "ON-VEHICLE SERVICE".
- Check resistance between terminals of each solenoid.

Solenoid	Terminal No.		Resistance
Shift solenoid A	③	Ground terminal	20 - 40Ω
Shift solenoid B	②		
Overrun clutch solenoid	④		
Line pressure solenoid	①		2.5 - 5Ω

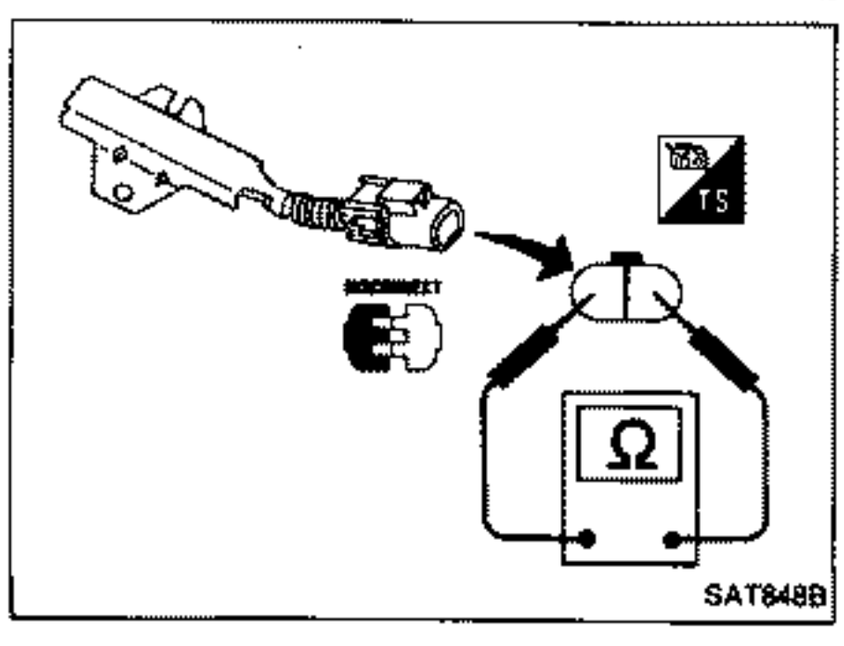

DROPPING RESISTOR

- Check resistance between two terminals.

Resistance: 11.2 - 12.8Ω

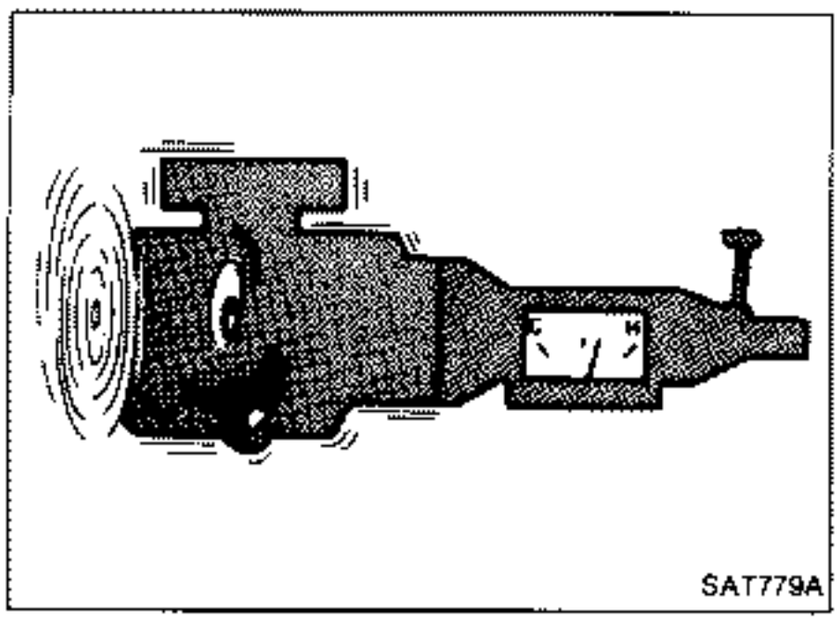
SAT779A

Final Check

STALL TESTING

Stall test procedure

1. Check A/T and engine fluid levels. If necessary, add.
2. Warm up engine until engine oil and A.T.F. reach operating temperature after vehicle has been driven approx. 10 minutes.

   A.T.F. operating temperature:
   50 - 80°C (122 - 176°F)

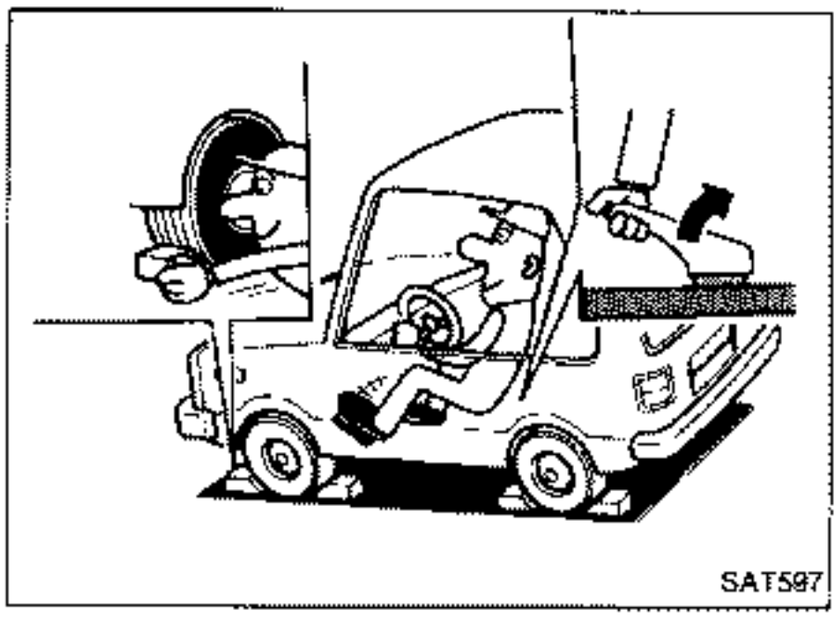
SAT597

3. Set parking brake and block wheels.
4. Install a tachometer where it can be seen by driver during test.

- **It is good practice to put a mark on point of specified engine rpm on indicator.**

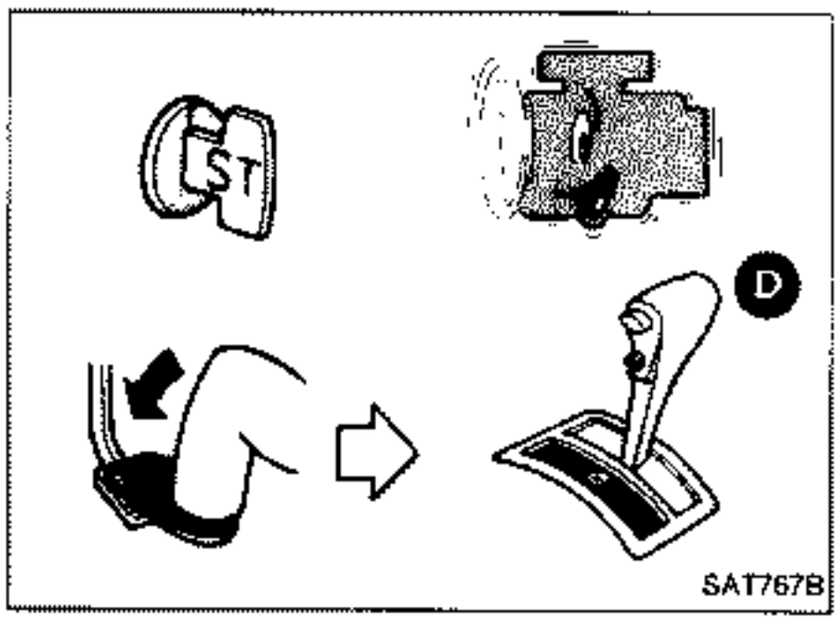

SAT767B

5. Start engine, apply foot brake, and place selector lever in "D" range.

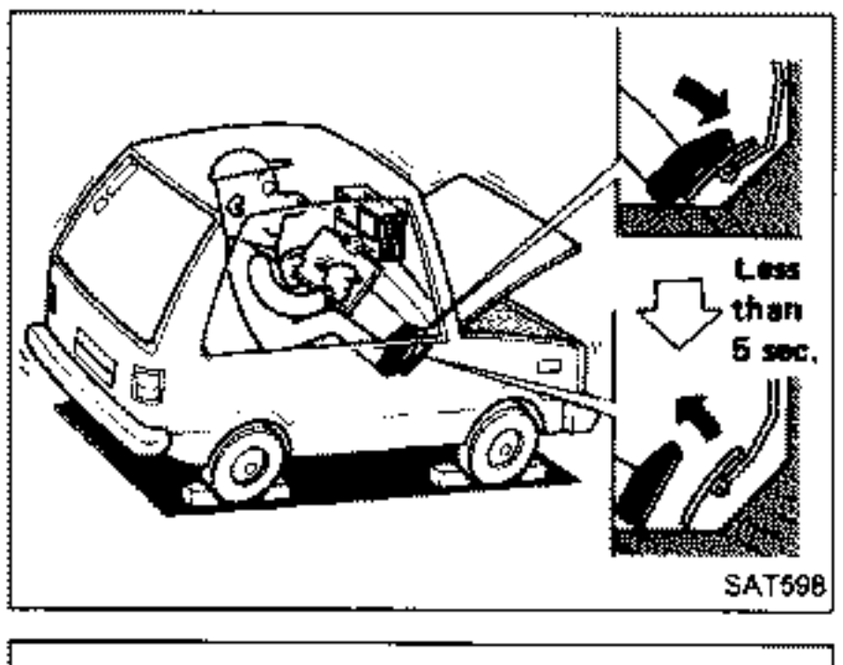

SAT598

6. Accelerate to wide-open throttle gradually while applying foot brake.
7. Quickly note the engine stall revolution and immediately release throttle.

- **During test, never hold throttle wide-open for more than 5 seconds.**

  Stall revolution:
  2,450 - 2,650 rpm (RE4R01A)
  2,950 - 3,200 rpm (RE4R03A)

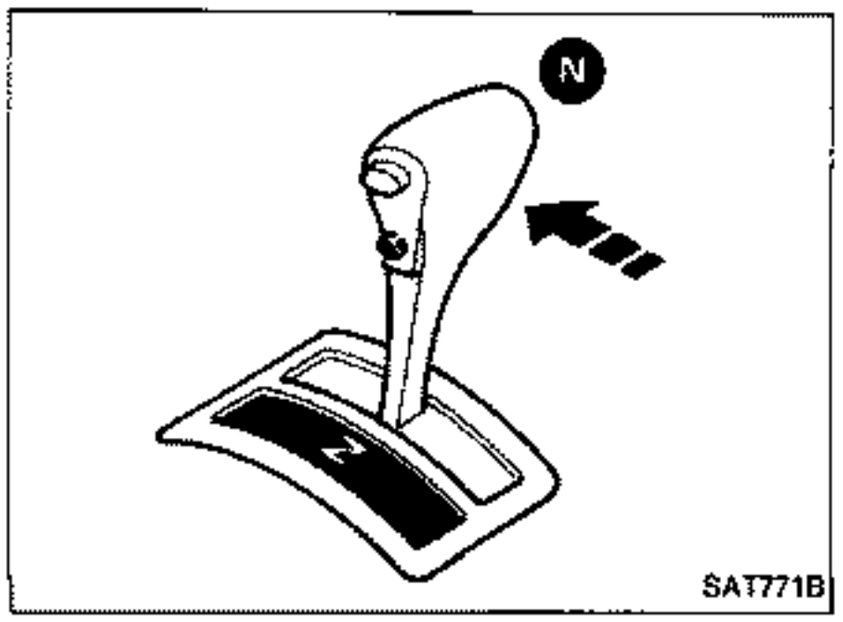

SAT771B

8. Shift selector lever to "N".
9. Cool off A.T.F.

- **Run engine at idle for at least one minute.**

10. Perform stall tests in the same manner as in steps 5 through 9 with selector lever in "2", "1" and "R", respectively.

Final Check (Cont'd)

Judgment of stall test

Selector lever position	Judgement		
D	L	O	H
2	L	O	H
1	L	O	O
R	L	H	H

O : Stall revolution is normal.
H : Stall revolution is higher than specified.
L : Stall revolution is lower than specified.

Damaged components

Engine

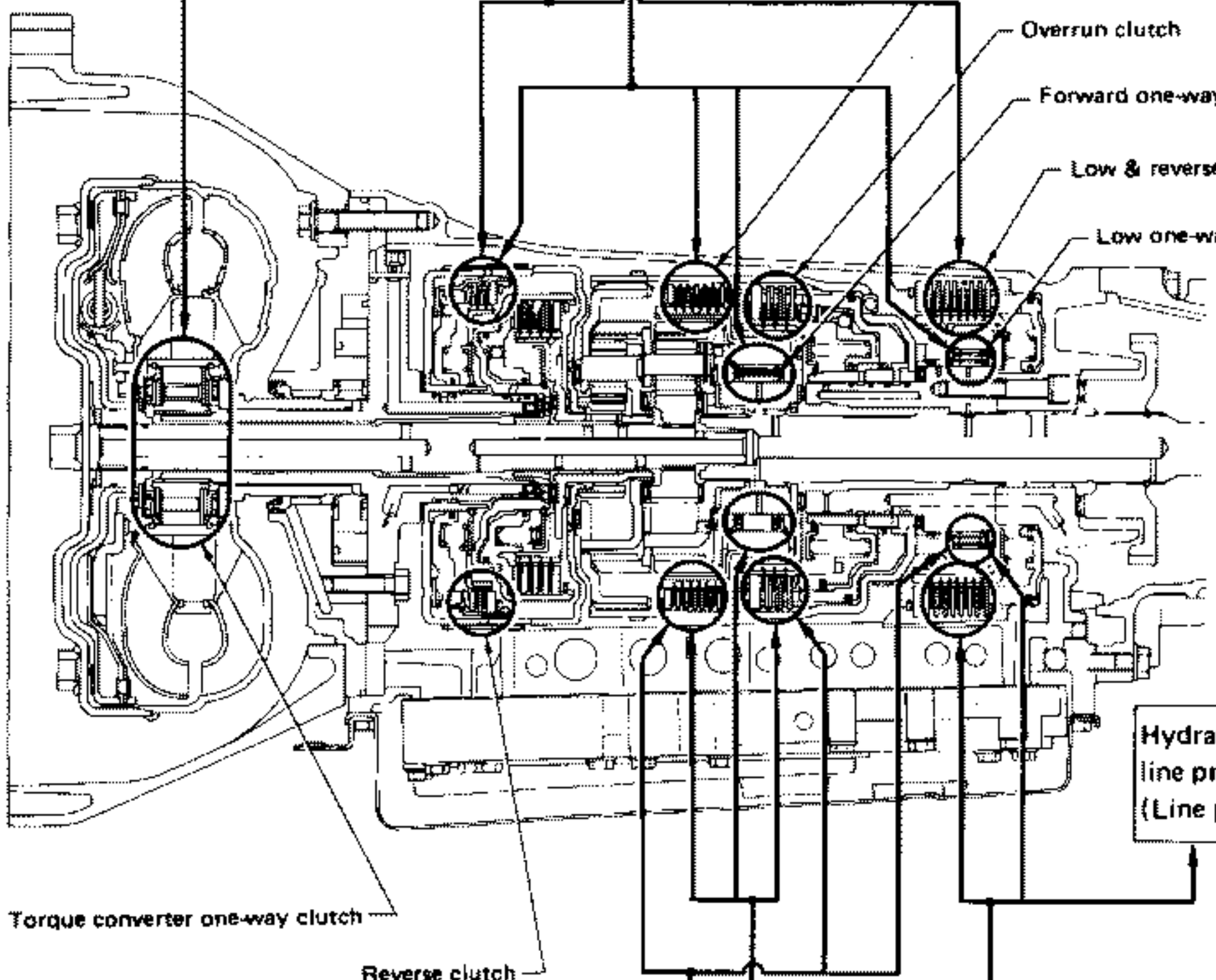

Hydraulic circuit for line pressure control (Line pressure is low.)

Clutches and brakes except high clutch and brake band are O.K. (Condition of high clutch and brake band cannot be confirmed by stall test.)

Selector lever position	Judgement			
D	H	H	H	O
2	H	H	H	O
1	O	H	H	O
R	O	O	H	O

SAT107B

Final Check (Cont'd)

PRESSURE TESTING

- Location of line pressure test port
- **Line pressure plugs are hexagon headed bolts.**
- **Always replace line pressure plugs as they are self-sealing bolts.**

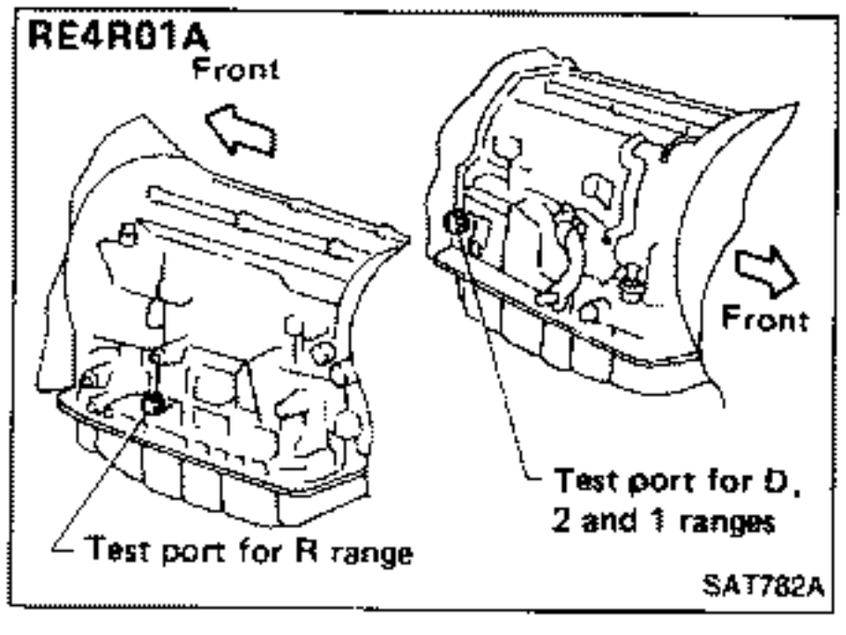

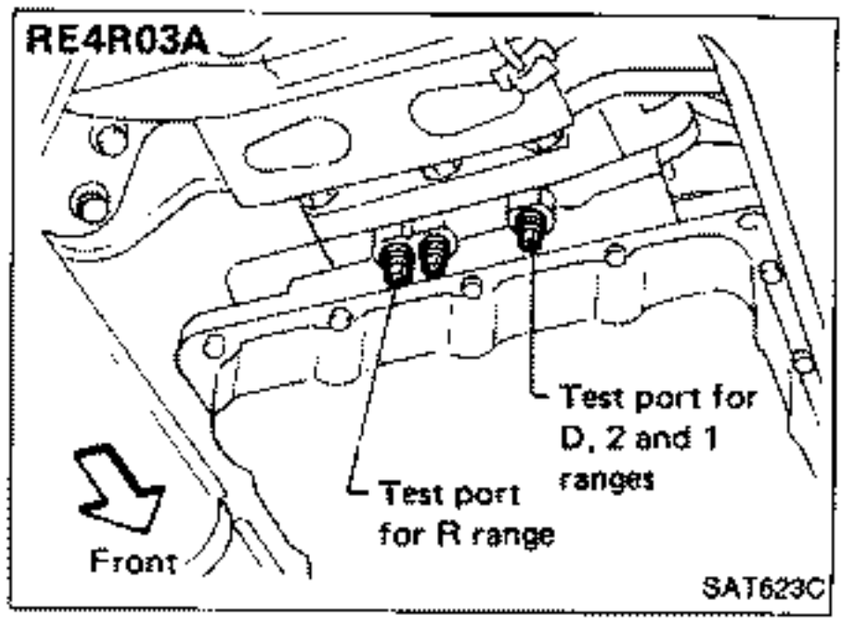

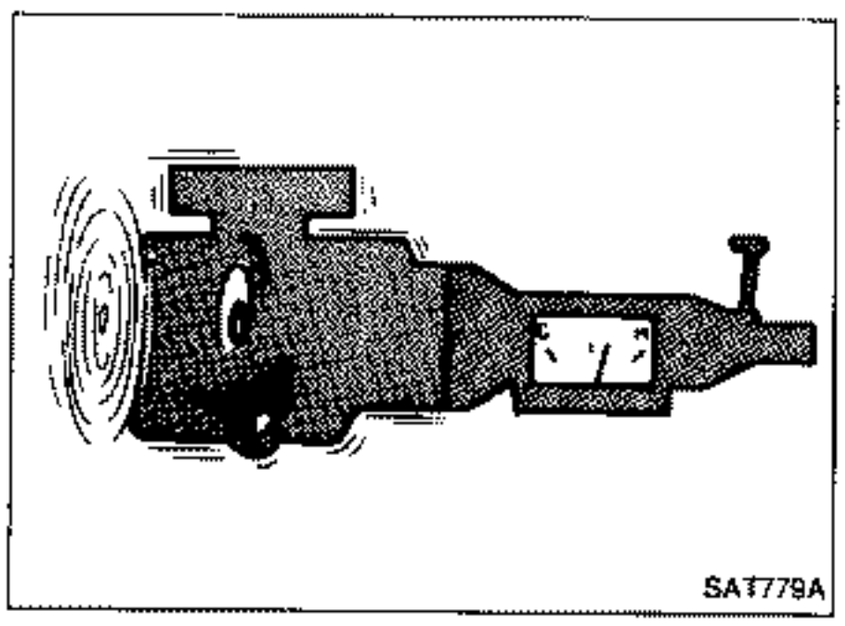

Line pressure test procedure

1. Check A/T and engine fluid levels. If necessary, add.
2. Warm up engine until engine oil and A.T.F. reach operating temperature after vehicle has been driven approx. 10 minutes.

   A.T.F. operating temperature:
   50 - 80°C (122 - 176°F)

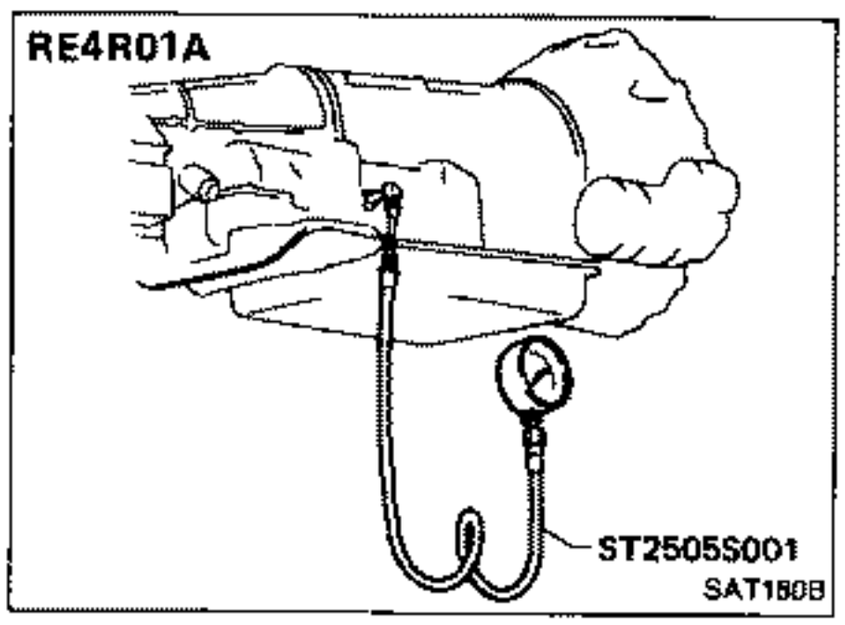

3. Install pressure gauge to line pressure port.

— D, 2 and 1 ranges —

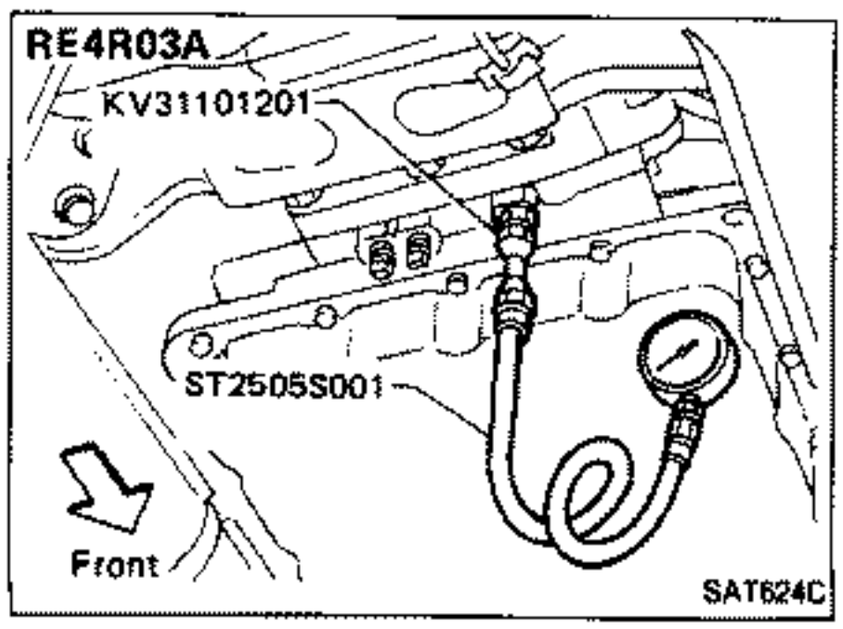

Final Check (Cont'd)

— R range —

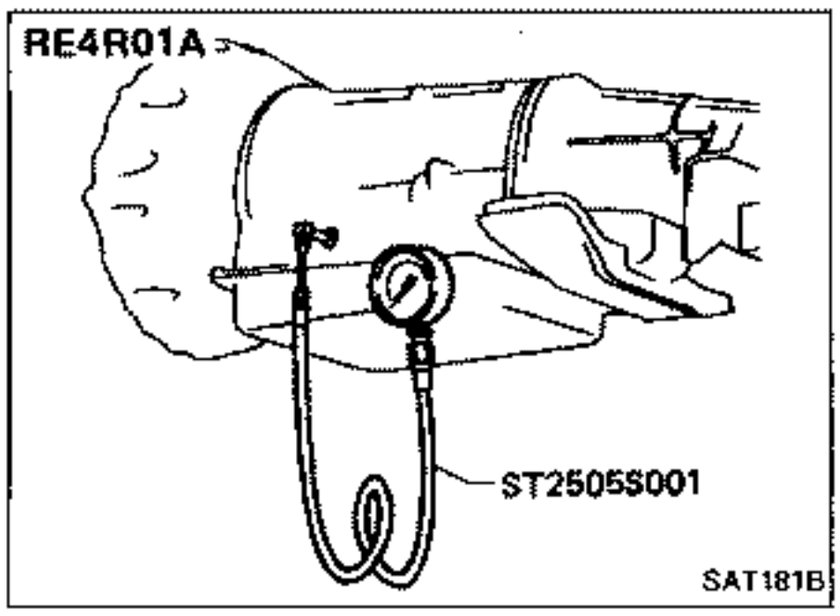

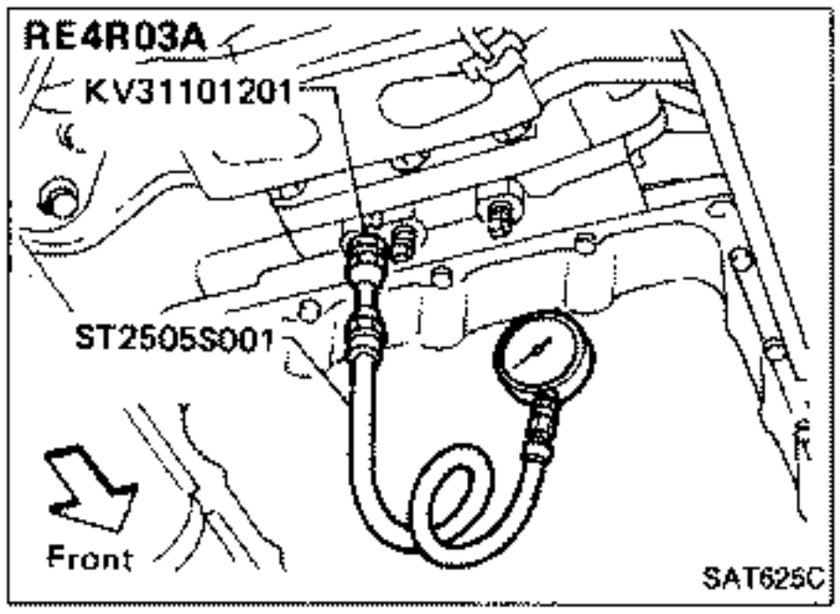

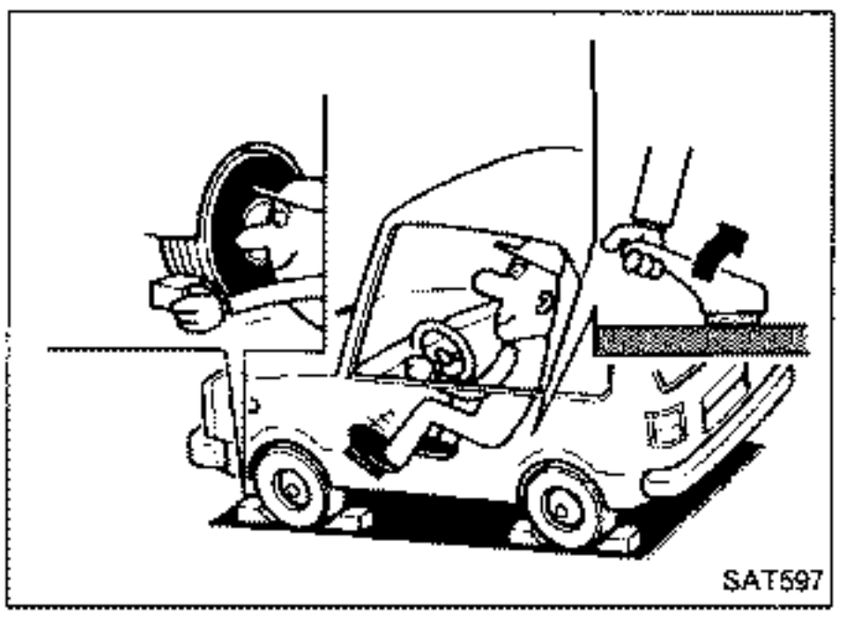

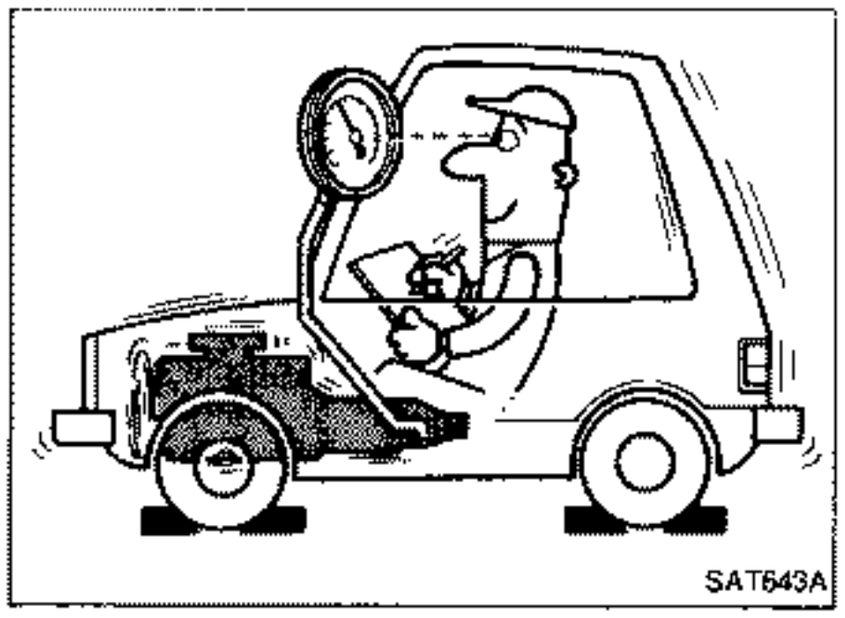

4. Set parking brake and block wheels.
- **Continue to depress brake pedal fully while line pressure test at stall speed is performed.**

5. Start engine and measure line pressure at idle and stall speed.
- **When measuring line pressure at stall speed, follow the stall test procedure.**

Line pressure:

Engine speed rpm	Line pressure kPa (bar, kg/cm², psi)	
	D, 2 and 1 ranges	R range
Idle	412 - 490 (4.12 - 4.90, 4.2 - 5.0, 60 - 71)	608 - 647 (6.08 - 6.47, 6.2 - 6.6, 88 - 94)
Stall	1,020 - 1,098 (10.20 - 10.98, 10.4 - 11.2, 148 - 159)	1,422 - 1,500 (14.22 - 15.00, 14.5 - 15.3, 206 - 218)

Final Check (Cont'd)

JUDGMENT OF LINE PRESSURE TEST

	Judgment	Suspected parts
At idle	Line pressure is low in all ranges.	• Oil pump wear • Control piston damage • Pressure regulator valve or plug sticking • Spring for pressure regulator valve damaged • Fluid pressure leakage between oil strainer and pressure regulator valve
	Line pressure is low in particular range.	• Fluid pressure leakage between manual valve and particular clutch • For example; If line pressure is low in "R" and "1" ranges but is normal in "D" and "2" range, fluid leakage exists at or around low & reverse brake circuit.
	Line pressure is high.	• Mal-adjustment of throttle sensor • Fluid temperature sensor damaged • Line pressure solenoid sticking • Short circuit of line pressure solenoid circuit • Pressure modifier valve sticking • Pressure regulator valve or plug sticking
At stall speed	Line pressure is low.	• Mal-adjustment of throttle sensor • Control piston damaged • Line pressure solenoid sticking • Short circuit of line pressure solenoid circuit • Pressure regulator valve or plug sticking • Pressure modifier valve sticking • Pilot valve sticking

Symptom Chart

Reference page (AT-)	Numbers are arranged in order of probability. Perform inspections starting with number one and working up. Circled numbers indicate that the transmission must be removed from the vehicle.	ON vehicle: Fluid level / Control linkage	Inhibitor switch / Throttle sensor (Adjustment)	Revolution sensor and speed sensor / Engine revolution signal	Engine idling rpm / Line pressure	Control valve assembly / Shift solenoid A	Shift solenoid B / Line pressure solenoid	Lock-up solenoid / Overrun clutch solenoid	Fluid temperature sensor / Accumulator N-D	Accumulator 1-2 / Accumulator 2-3	Accumulator 3-4 (N-R) / Ignition switch and starter	OFF vehicle: Torque converter / Oil pump	Reverse clutch / High clutch	Forward clutch / Forward one-way clutch	Overrun clutch / Low one-way clutch	Low & reverse brake / Brake band	Parking components
	Reference page (AT-)	9, 15	86	86	90	87, 123	87	87	8, 87	8	8	106, 116	137, 142	144, 159	144, 153	148	166
67	Engine does not start in "N", "P" ranges.	2	3								1						
67	Engine starts in range other than "N" and "P".	1	2														
—	Transmission noise in "P" and "N" ranges.	1	3	4 5	2							⑦⑥					
67	Vehicle moves when changing into "P" range or parking gear does not disengage when shifted out of "P" range.	1															②
68	Vehicle runs in "N" range.	1									4		③	②	⑤		
70	Vehicle will not run in "R" range (but runs in "D", "2" and "1" ranges). Clutch slips. Very poor acceleration.	1			2	4	3						⑤⑥	⑦	⑧	⑨	
—	Vehicle braked when shifting into "R" range.	1 2			3	5	4						⑥	⑧	⑨	⑦	
—	Sharp shock in shifting from "N" to "D" range.		2	5	1 3	7	6		4 8					⑨			
—	Vehicle will not run in "D" and "2" ranges (but runs in "1" and "R" range).	1													②		
71	Vehicle will not run in "D", "1", "2" ranges (but runs in "R" range). Clutch slips. Very poor acceleration.	1			2	4	3		5				⑥⑦	⑧⑨	⑩		
—	Clutches or brakes slip somewhat in starting.	1 2	3		4	6	5		7		8	⑬⑫	⑩	⑨		⑪	
—	Excessive creep.				1												
70, 71	No creep at all.	1			2	3						⑥⑤		④			
—	Failure to change gear from "D_1" to "D_2".	2	1	5		4 3										⑥	
—	Failure to change gear from "D_2" to "D_3".	2	1	5		4	3						⑥			⑦	
—	Failure to change gear from "D_3" to "D_4".	2	1	4		3			5							⑥	
73, 74, 75	Too high a gear change point from "D_1" to "D_2", from "D_2" to "D_3", from "D_3" to "D_4".		1	2		3	4										
—	Gear change directly from "D_1" to "D_3" occurs.	1								2						③	
—	Engine stops when shifting lever into "R", "D", "2" and "1".				1	3		2				④					
—	Too sharp a shock in change from "D_1" to "D_2".		1		2	4			5	3						⑥	
—	Too sharp a shock in change from "D_2" to "D_3".		1		2	4				3			⑤			⑥	

Symptom Chart (Cont'd)

Reference page (AT-)	Numbers are arranged in order of probability. Perform inspections starting with number one and working up. Circled numbers indicate that the transmission must be removed from the vehicle.	ON vehicle										OFF vehicle					
	Reference page (AT-)	9, 15	86	86	90	87, 123	87	87	8, 87	8	8	106, 118	137, 142	144, 159	144, 153	148	166
		Fluid level Control linkage	Inhibitor switch Throttle sensor (Adjustment)	Revolution sensor and speed sensor Engine revolution signal	Engine idling rpm Line pressure	Control valve assembly Shift solenoid A	Shift solenoid B Line pressure solenoid	Lock-up solenoid Overrun clutch solenoid	Fluid temperature sensor Accumulator N-D	Accumulator 1-2 Accumulator 2-3	Accumulator 3-4 (N-R) Ignition switch and starter	Torque converter Oil pump	Reverse clutch High clutch	Forward clutch Forward one-way clutch	Overrun clutch Low one-way clutch	Low & reverse brake Brake band	Parking components
—	Too sharp a shock in change from "D_3" to "D_4".		1		2	4					3				⑥	⑤	
—	Almost no shock or clutches slipping in change from "D_1" to "D_2".	1	2		3	5				4						⑥	
—	Almost no shock or slipping in change from "D_2" to "D_3".	1	2		3	5					4		⑥			⑦	
—	Almost no shock or slipping in change from "D_3" to "D_4".	1	2		3	5					4		⑥			⑦	
—	Vehicle braked by gear change from "D_4" to "D_3".	1											②④		⑤	③	
—	Vehicle braked by gear change from "D_3" to "D_2".	1														②	
—	Vehicle braked by gear change from "D_2" to "D_1".	1											④	③	②		
—	Maximum speed not attained. Acceleration poor.	1	2			5	3	4				⑪	⑩⑥	⑦		⑨	⑧
—	Failure to change gear from "D_4" to "D_3".	1	2			6	4	5	3						⑧	⑦	
—	Failure to change gear from "D_3" to "D_2" or from "D_4" to "D_2".	1	2			5	3	4					⑥			⑦	
—	Failure to change gear from "D_2" to "D_1" or from "D_3" to "D_1".	1	2			5	3	4					⑦		⑥	⑧	
—	Gear change shock felt during deceleration by releasing accelerator pedal.		1		2	4			3								
—	Too high a change point from "D_4" to "D_3", from "D_3" to "D_2", from "D_2" to "D_1".		1	2													
—	Kickdown does not operate when depressing pedal in "D_4" within kickdown vehicle speed.		1	2			3	4									
—	Kickdown operates or engine overruns when depressing pedal in "D_4" beyond kickdown vehicle speed limit.		2	1			3	4									
—	Races extremely fast or slips in changing from "D_4" to "D_3" when depressing pedal.	1	2		3	5		4					⑥	⑦			
—	Races extremely fast or slips in changing from "D_4" to "D_2" when depressing pedal.	1	2		3	6	5	4						⑧		⑦	
—	Races extremely fast or slips in changing from "D_3" to "D_2" when depressing pedal.	1	2		3	5		4		6	7		⑩	⑨		⑧	
—	Races extremely fast or slips in changing from "D_4" or "D_3" to "D_1" when depressing pedal.	1	2		3	5		4						⑥⑦	⑧		
—	Vehicle will not run in any range.	1 2			3			4				⑨⑤	⑥			⑧⑦	⑩
—	Transmission noise in "D", "2", "1" and "R" ranges.	1										②					

Symptom Chart (Cont'd)

Reference page (AT-)		ON vehicle										OFF vehicle					
		9, 15	86	86	90	87, 123	87	87	8, 87	8	8	106, 118	137, 142	144, 159	144, 153	148	166
Reference page (AT-)	Numbers are arranged in order of probability. Perform inspections starting with number one and working up. Circled numbers indicate that the transmission must be removed from the vehicle.	Fluid level Control linkage	Inhibitor switch Throttle sensor (Adjustment)	Revolution sensor and speed sensor Engine revolution signal	Engine idling rpm Line pressure	Control valve assembly Shift solenoid A	Shift solenoid B Line pressure solenoid	Lock-up solenoid Overrun clutch solenoid	Fluid temperature sensor Accumulator N-D	Accumulator 1-2 Accumulator 2-3	Accumulator 3-4 (N-R) Ignition switch and starter	Torque converter Oil pump	Reverse clutch High clutch	Forward clutch Forward one-way clutch	Overrun clutch Low one-way clutch	Low & reverse brake Brake band	Parking components
80	Failure to change from "D_3" to "2_2" when changing lever into "2" range.	7	1 2			6 5	4	3							⑨	⑧	
—	Gear change from "2_2" to "2_3" in "2" range.		1														
80	Engine brake does not operate in "1" range.	2	1 3	4		6 5		7							⑧	⑨	
—	Gear change from "1_1" to "1_2" in "1" range.	2	1														
—	Does not change from "1_2" to "1_1" in "1" range.		1	2		4 3		5							⑥	⑦	
—	Large shock changing from "1_2" to "1_1" in "1" range.					1										②	
—	Transmission overheats.	1	3		2 4	6	5					⑭⑦	⑧⑨	⑪	⑫	⑬⑩	
—	A.T.F. shoots out during operation. White smoke emitted from exhaust pipe during operation.	1											②③	⑤	⑥	⑦④	
—	Offensive smell at fluid charging pipe.	1										②③	④⑤	⑦	⑧	⑨⑥	
—	Torque converter is not locked up.		3 1	2 4	6	8		7	5			⑨					
—	Lock-up piston slip	1	2		3	6	5	4				⑦					
76	Lock-up point is extremely high or low.		1	2		4		3									
—	A/T does not shift to "D_4" when driving with overdrive switch "ON".		2 1	3	8	6 4		5	7						⑩	⑨	
—	Engine is stopped at "R", "D", "2" and "1" ranges.	1				5 4	3	2									

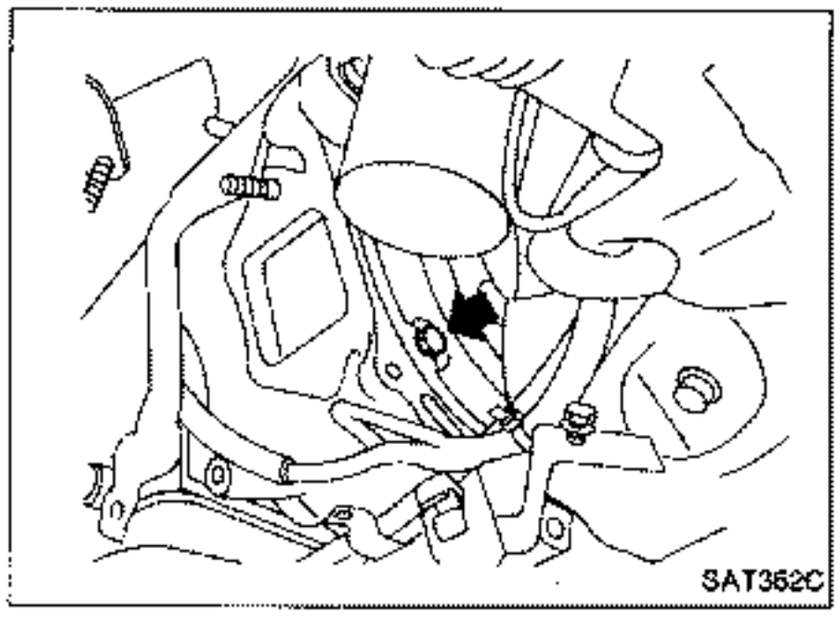
SAT352C

Removal

- Remove exhaust tube.
- Remove fluid charging pipe from A/T assembly.
- Remove oil cooler pipe from A/T assembly.
- Remove control linkage from selector lever.
- Disconnect inhibitor switch and solenoid harness connectors.
- Remove speedometer cable from A/T assembly.
- Plug up openings such as the oil charging pipe hole, etc.
- Remove propeller shaft. — Refer to section PD.
- **Insert plug into rear oil seal after removing propeller shaft.**
- **Be careful not to damage spline, sleeve yoke and rear oil seal, when removing propeller shaft.**
- Remove starter motor.
- Remove gusset securing engine to A/T assembly.
- Remove bolts securing torque converter to drive plate.
- **Remove the bolts by turning crankshaft.**
- Support engine by placing a jack under oil pan.
- **Do not place jack under oil pan drain plug.**
- Remove transmission from engine.
- **Support automatic transmission, while removing it.**

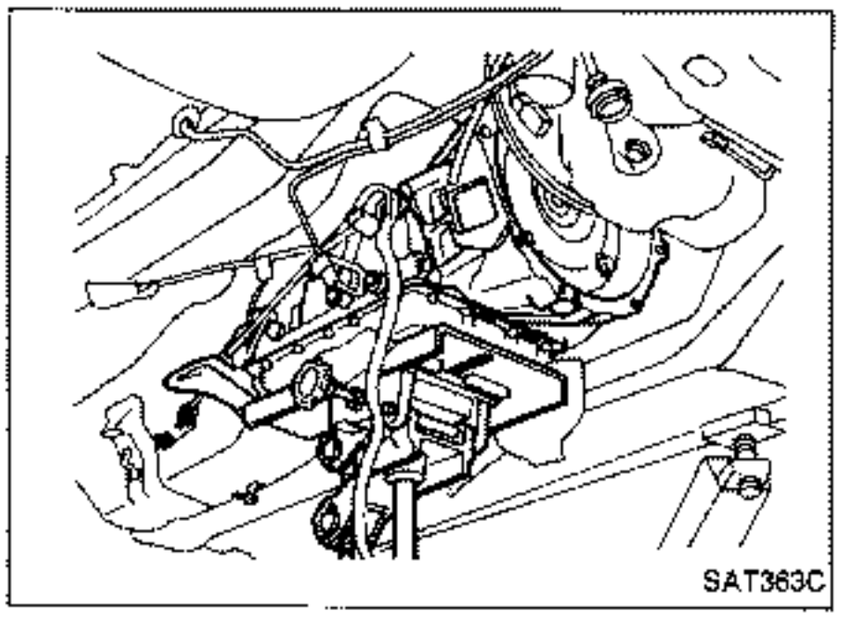
SAT363C

Installation

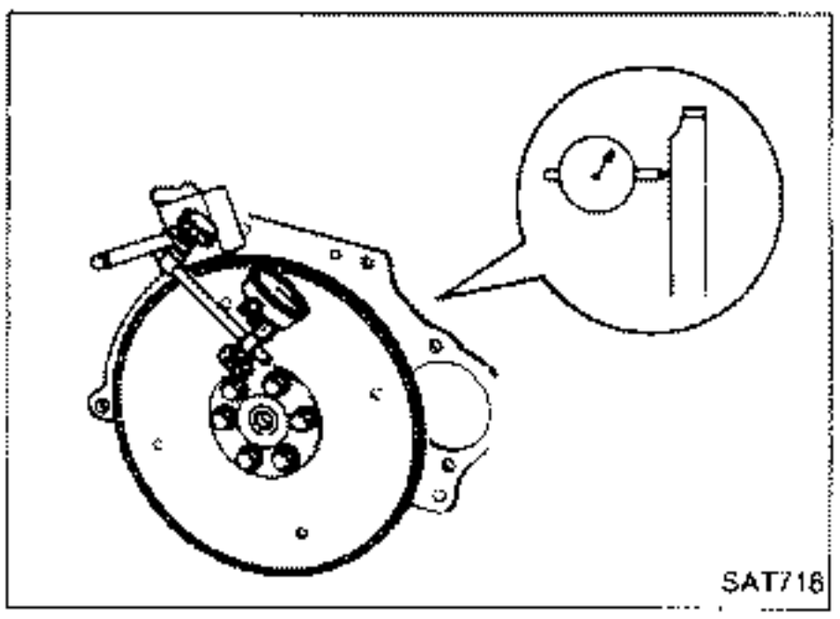
SAT716

- Drive plate runout
  Maximum allowable runout:
  0.5 mm (0.020 in)
  If this runout is out of allowance, replace drive plate with ring gear.

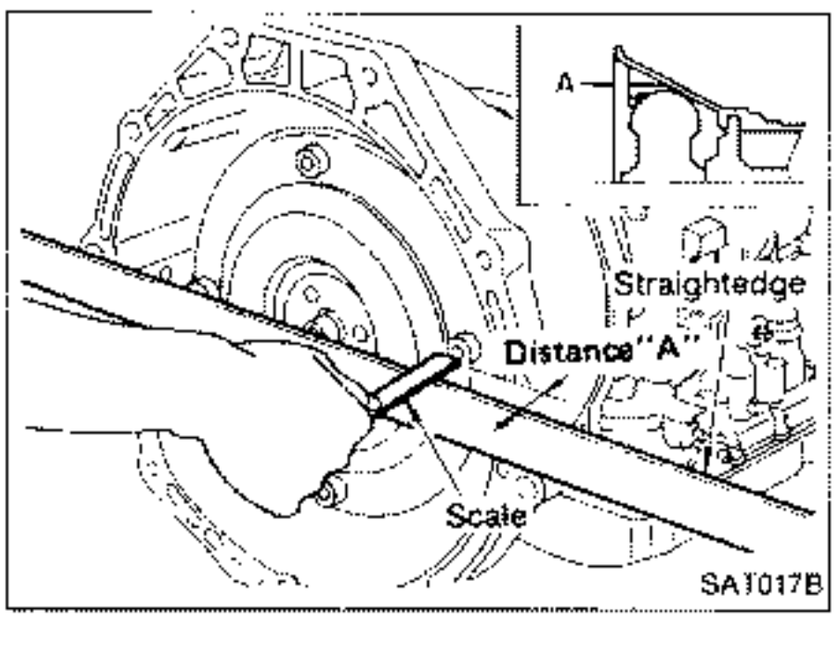

SAT017B

- When connecting torque converter to transmission, measure distance "A" to be certain that they are correctly assembled.
  Distance "A":
  RE4R01A
  26 mm (1.02 in) or more
  RE4R03A
  25 mm (0.98 in) or more
- Install converter to drive plate.
- Reinstall any part removed.
- **After converter is installed to drive plate, rotate crankshaft several turns and check to be sure that transmission rotates freely without binding.**

Installation (Cont'd)

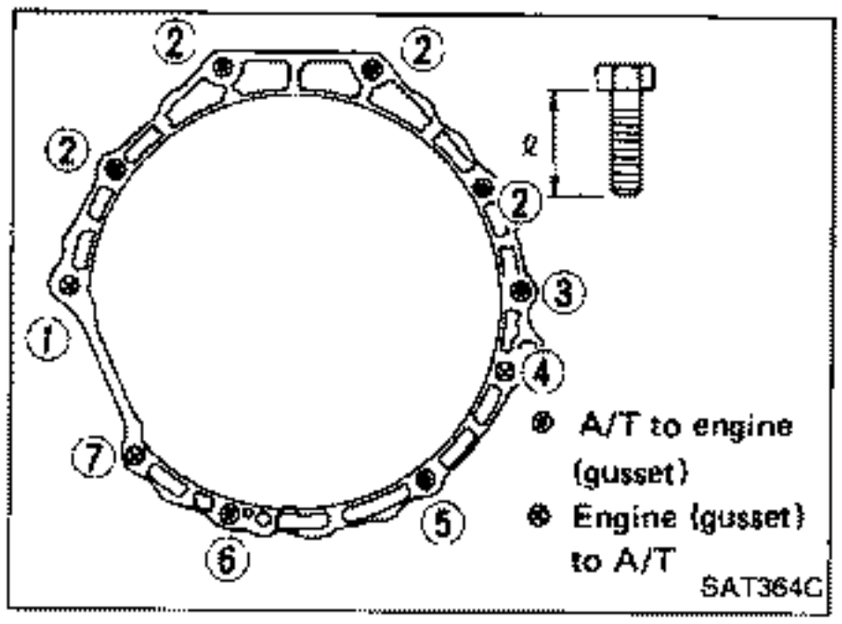

- Tighten bolts securing transmission.

RE4R01A

Bolt No.	Tightening torque N·m (kg-m, ft-lb)	Bolt length "ℓ" mm (in)
1	39 - 49 (4.0 - 5.0, 29 - 36)	60 (2.36)
2	39 - 49 (4.0 - 5.0, 29 - 36)	50 (1.97)
3	39 - 49 (4.0 - 5.0, 29 - 36)	45 (1.77)
4	29 - 39 (3.0 - 4.0, 22 - 29)	25 (0.98)
5	29 - 39 (3.0 - 4.0, 22 - 29)	60 (2.36)
6	39 - 49 (4.0 - 5.0, 29 - 36)	65 (2.56)
7	39 - 49 (4.0 - 5.0, 29 - 36)	25 (0.98)
Gusset to engine	29 - 39 (3.0 - 4.0, 22 - 29)	20 (0.79)

RE4R03A

Bolt No.	Tightening torque N·m (kg-m, ft-lb)	Bolt length "ℓ" mm (in)
1	39 - 49 (4.0 - 5.0, 29 - 36)	60 (2.36)
2	39 - 49 (4.0 - 5.0, 29 - 36)	60 (2.36)
3	39 - 49 (4.0 - 5.0, 29 - 36)	65 (2.56)
4	29 - 39 (3.0 - 4.0, 22 - 29)	25 (0.98)
5	29 - 39 (3.0 - 4.0, 22 - 29)	60 (2.36)
6	39 - 49 (4.0 - 5.0, 29 - 36)	65 (2.56)
7	39 - 49 (4.0 - 5.0, 29 - 36)	25 (0.98)
Gusset to engine	29 - 39 (3.0 - 4.0, 22 - 29)	20 (0.79)

- Reinstall any part removed.

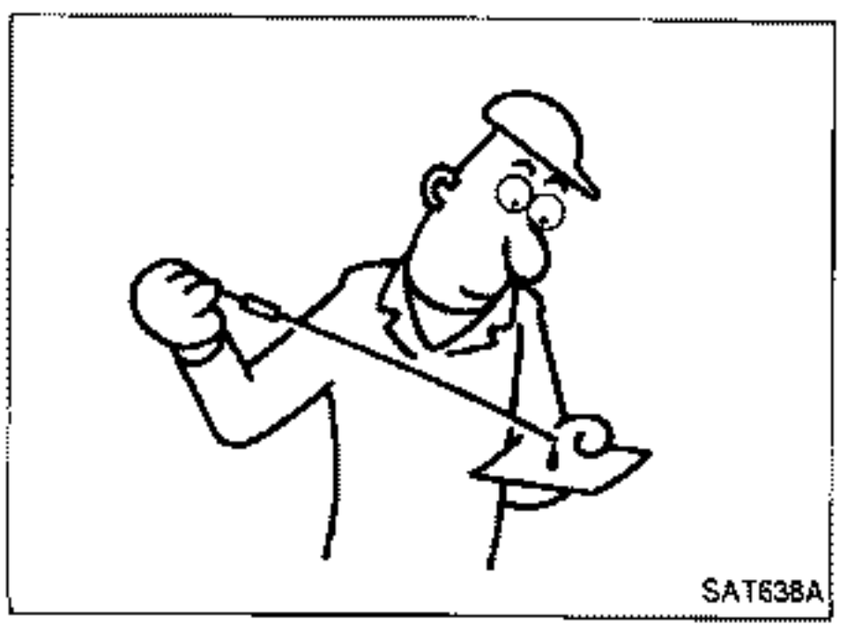

- Check fluid level in transmission.
- Move selector lever through all positions to be sure that transmission operates correctly.
  With parking brake applied, rotate engine at idling. Move selector lever through "N" to "D", to "2", to "1" and to "R". A slight shock should be felt by hand gripping selector each time transmission is shifted.
- Perform road test. — Refer to "ROAD TESTING".

RE4R01A

: N·m (kg-m, ft-lb)
: Apply recommended sealant (Nissan genuine part: KP610-00250) or equivalent.
(ATF) : Apply A.T.F.
(P) : Apply petroleum jelly
★ : Select with proper thickness.
☆ : Adjustment is required.

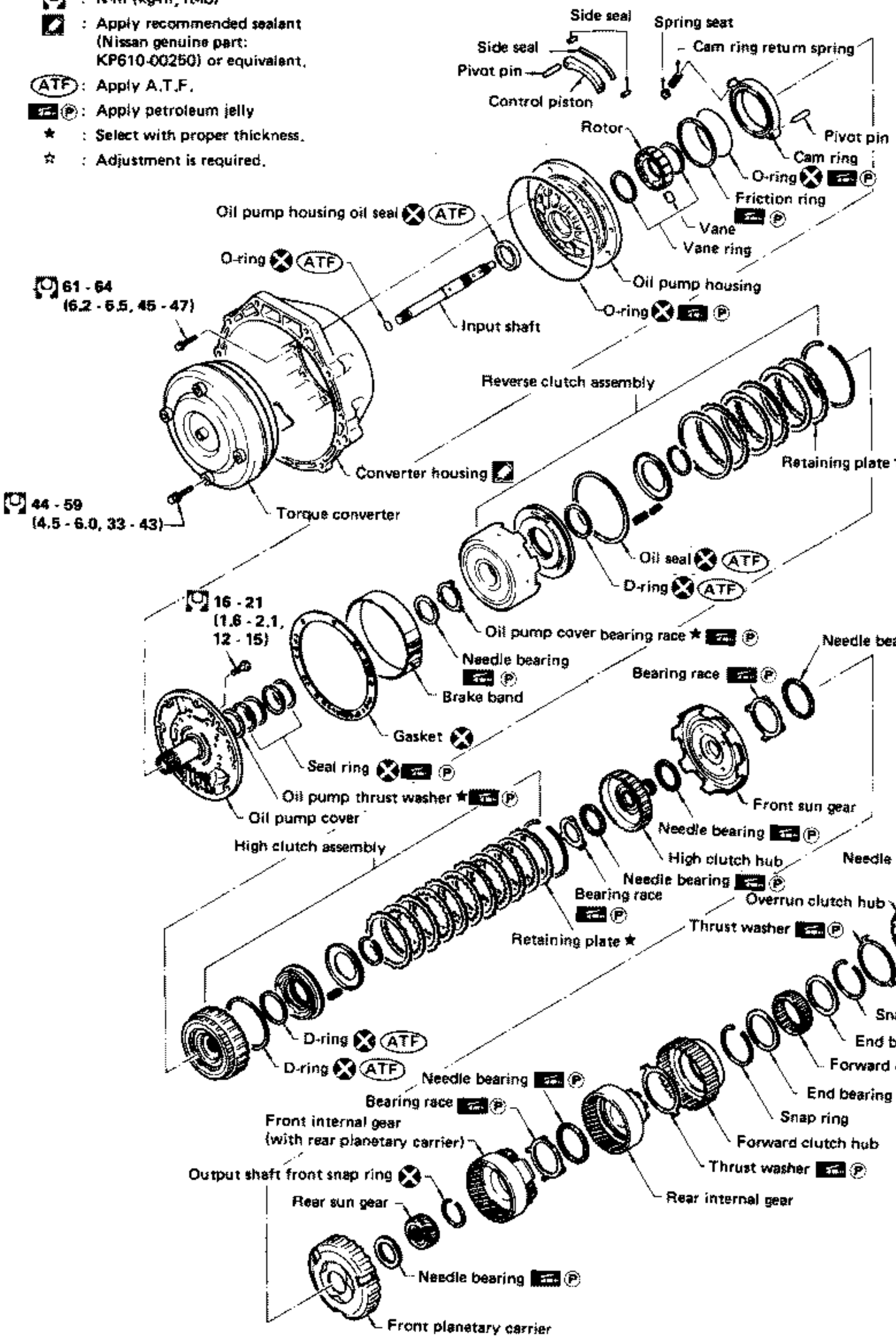

RE4R01A (Cont'd)

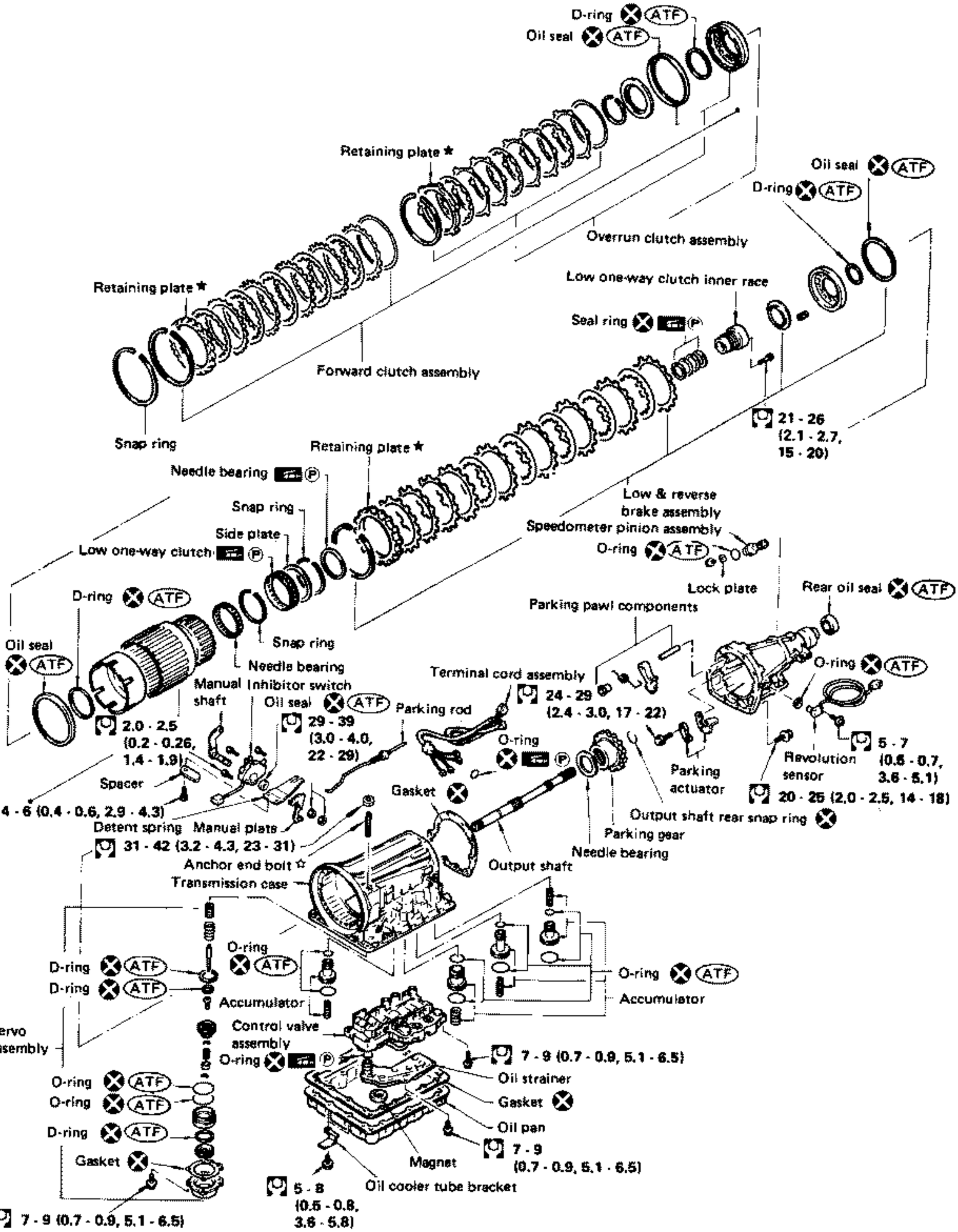

SAT940C

RE4R03A

: N·m (kg-m, ft-lb)
: Apply recommended sealant (Nissan genuine part: KP610-00250) or equivalent.
(ATF) : Apply A.T.F.
(P) : Apply petroleum jelly
★ : Select with proper thickness.
☆ : Adjustment is required.

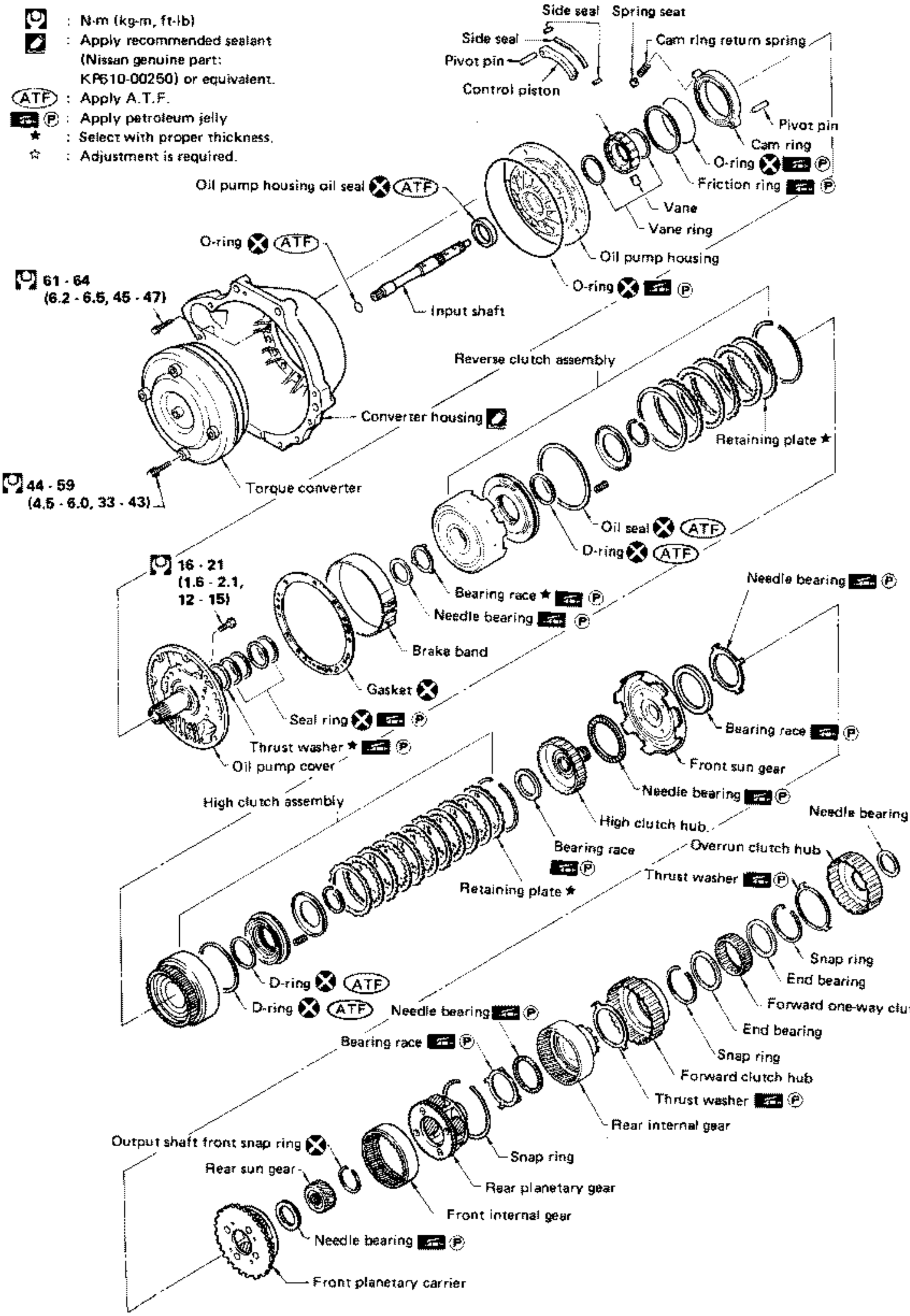

RE4R03A (Cont'd)

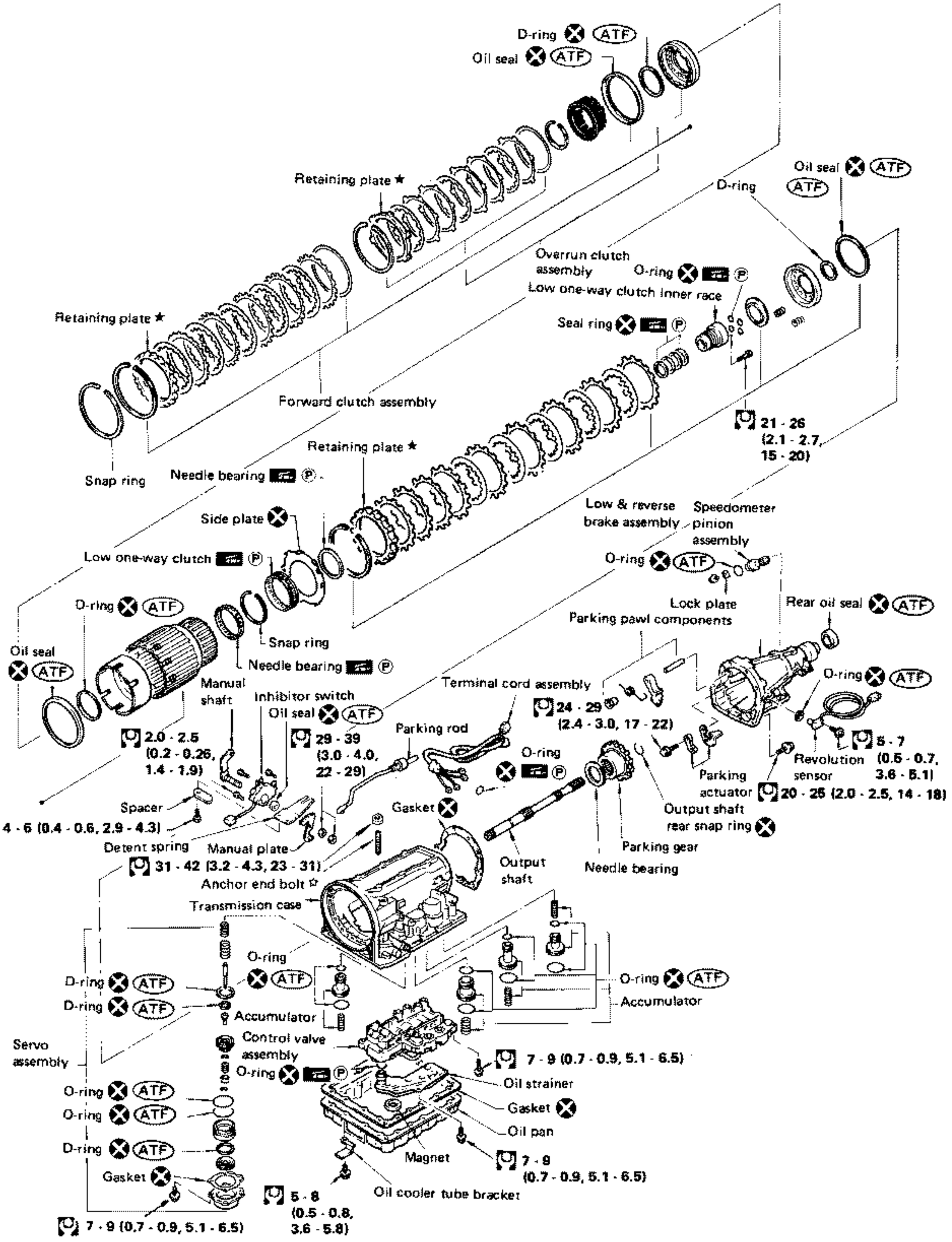

SAT941C

Oil Channel — RE4R01A

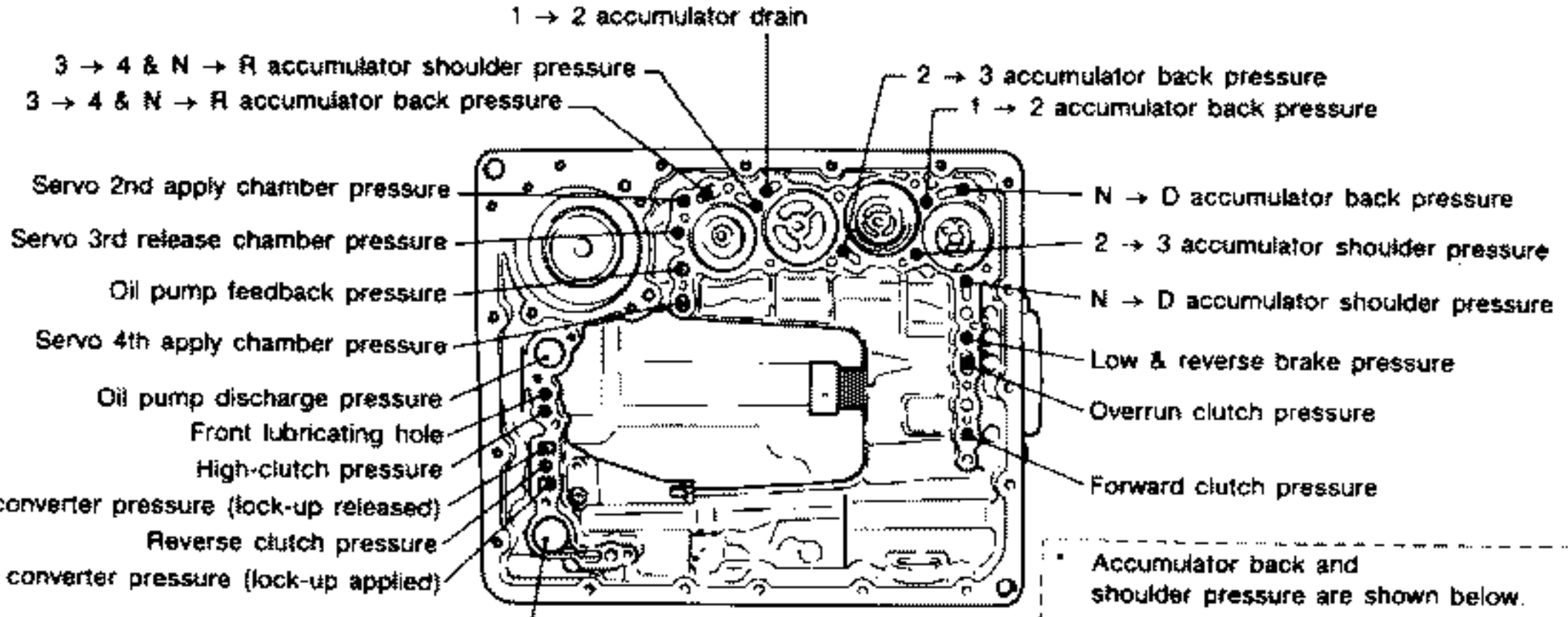

* Accumulator back and shoulder pressure are shown below.

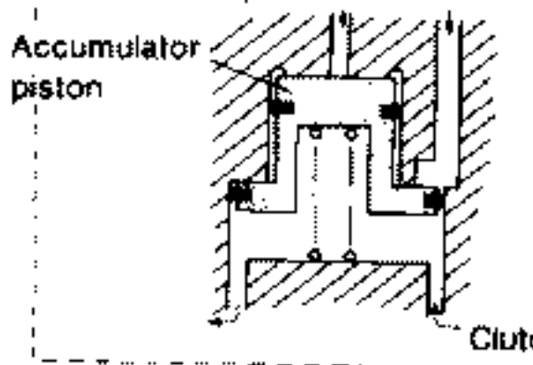

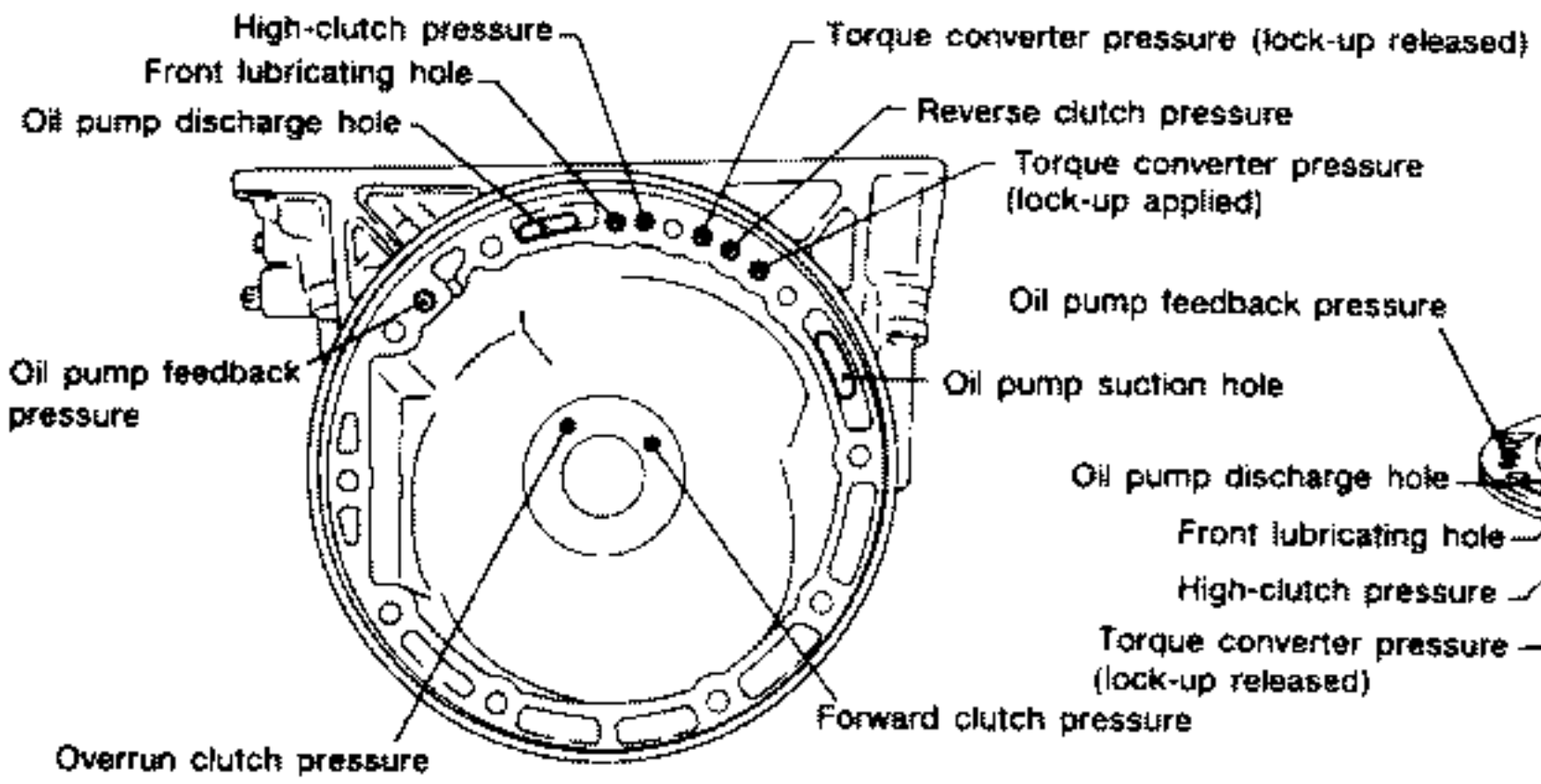

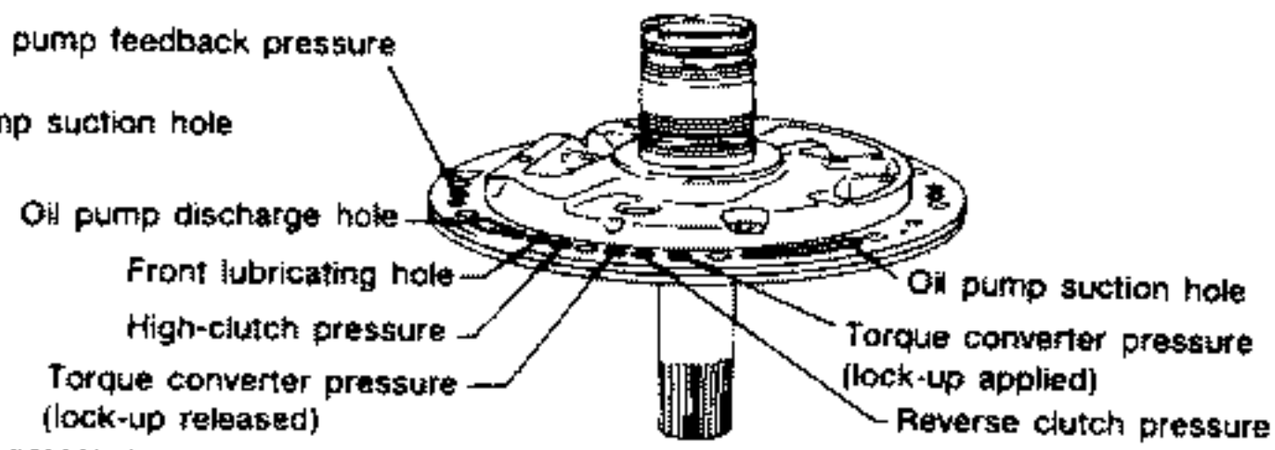

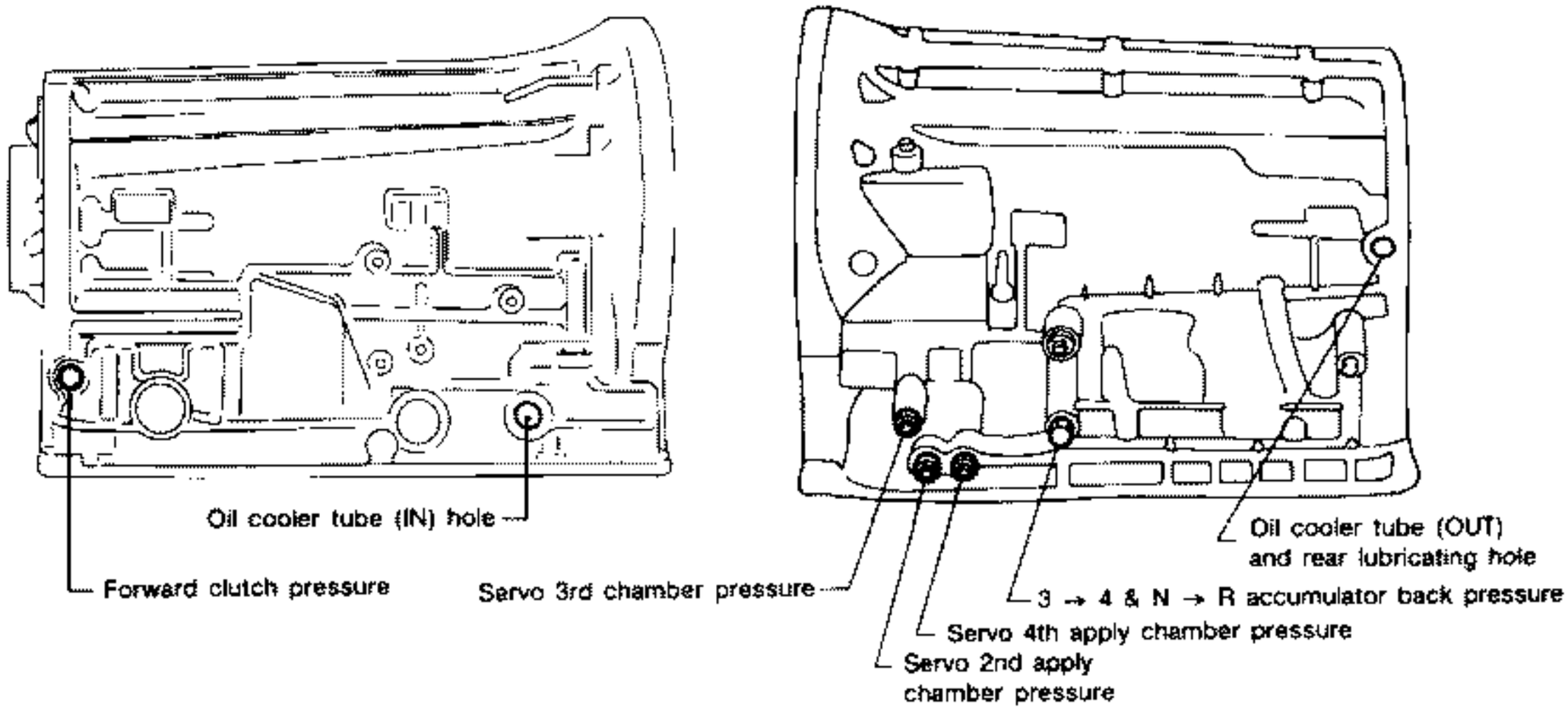

SAT185B

Oil Channel — RE4R03A

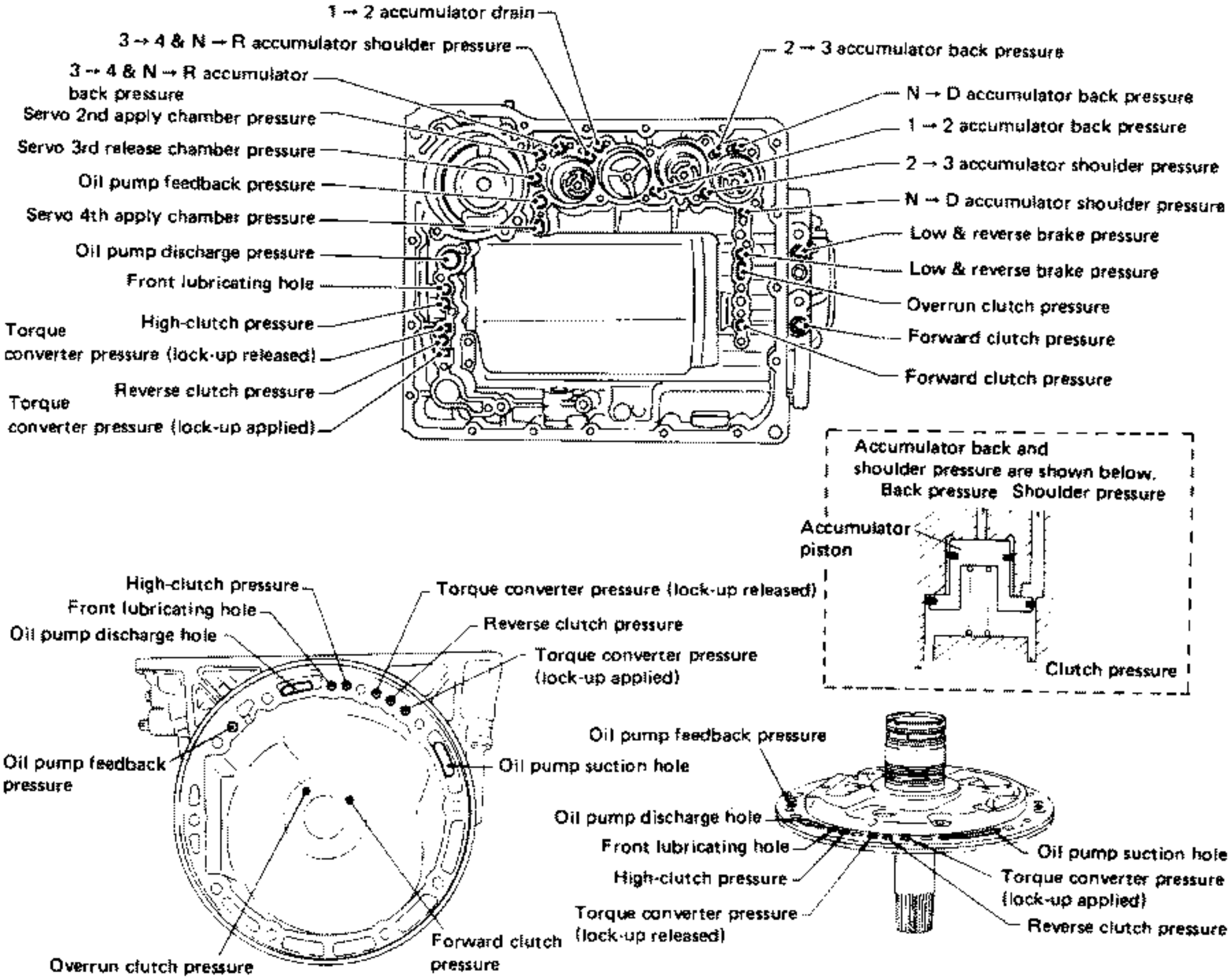

SAT611B

Locations of Needle Bearings, Thrust Washers and Snap Rings — RE4R01A

Outer diameter of snap rings

Item number	Outer diameter mm (in)
②	161.0 (6.34)
③	140.1 (5.52)
④	156.4 (6.16)
⑥	142.0 (5.59)
⑦	159.2 (6.27)

Thrust washers

Item number	Color
①	Black
⑤	White

Outer diameter of needle bearings

Item number	Outer diameter mm (in)
⑧	47 (1.85)
⑨	53 (2.09)
⑩	53 (2.09)
⑪	78 (3.07)
⑫	53 (2.09)
⑬	78 (3.07)
⑭	59 (2.32)
⑮	78 (3.07)
⑯	64 (2.52)

Inner diameter of bearing races

Item number	Outer diameter mm (in)
⑪	58 (2.28)
⑬	58.8 (2.315)

Installation of one-piece bearings

Item number	Bearing race (black) location
⑫	Front
⑮	Rear side
⑯	Rear side

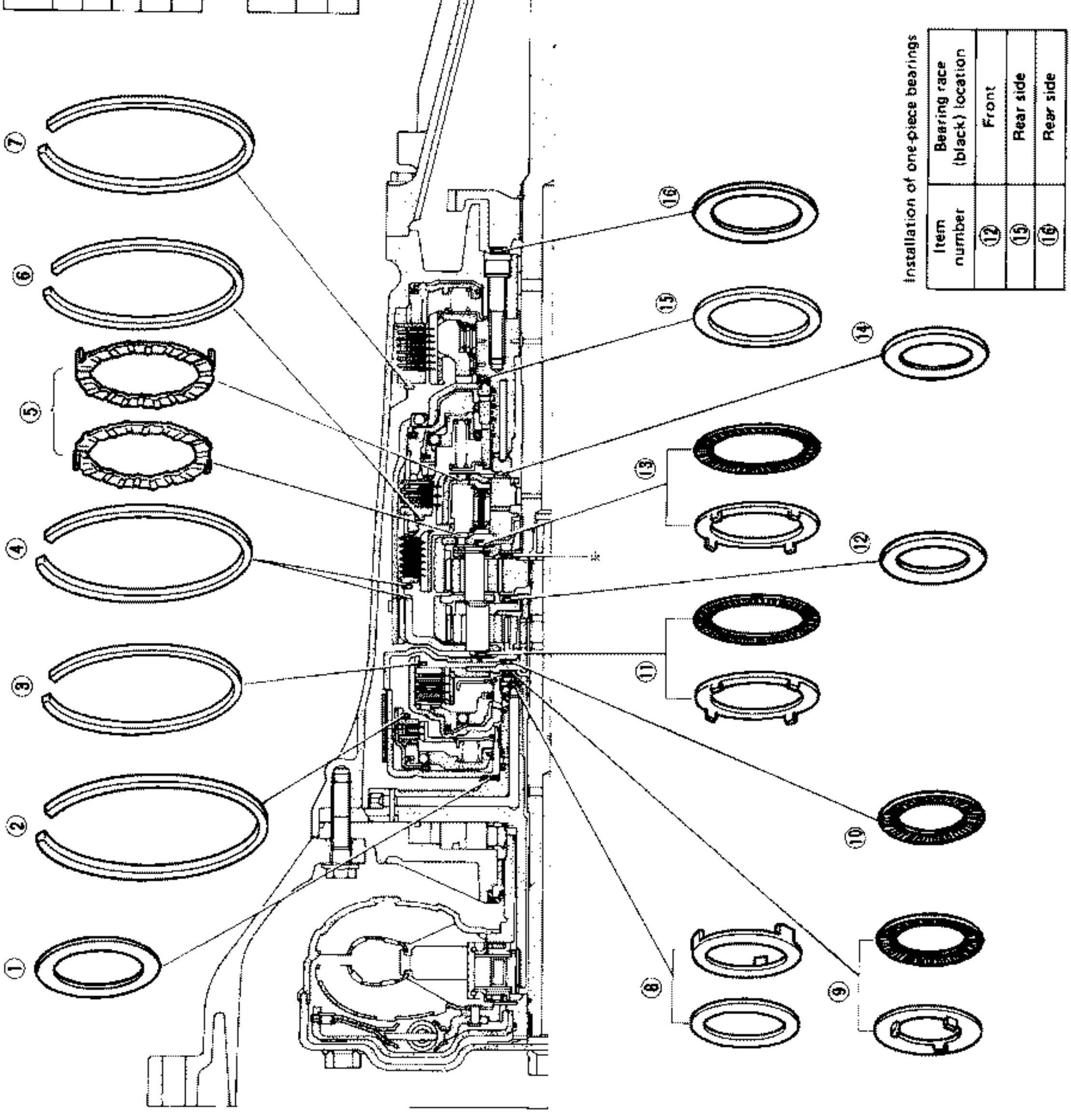

SAT647A

Locations of Needle Bearings, Thrust Washers and Snap Rings — RE4R03A

Outer diameter of snap rings

Item number	Outer diameter mm (in)
②, ⑤	164.0 (6.46)
③	176.0 (6.93)
⑥	172.0 (6.77)

Thrust washers

Item number	Color
①	Black
④	White

Outer diameter of bearing races

Item number	Outer diameter mm (in)
⑦	43.5 (1.713)
⑩	82.0 (3.228)
⑬	63.2 (2.488)

Installation of one-piece bearings

Item number	Bearing race (black) location
⑮	Rear side
⑯	Rear side

Inner and outer diameter of needle bearings

Item number	Outer diameter mm (in)	Inner diameter mm (in)	Number of needles
⑦	47.0 (1.850)	30.0 (1.181)	—
⑧	53.0 (2.087)	35.1 (1.382)	—
⑨, ⑩	85.0 (3.346)	62.7 (2.468)	—
⑪, ⑫	64.0 (2.520)	45.0 (1.772)	52
⑬	64.0 (2.520)	45.0 (1.772)	50
⑭	64.0 (2.520)	44.0 (1.732)	34
⑮	78.1 (3.075)	—	—
⑯	64.0 (2.520)	—	—

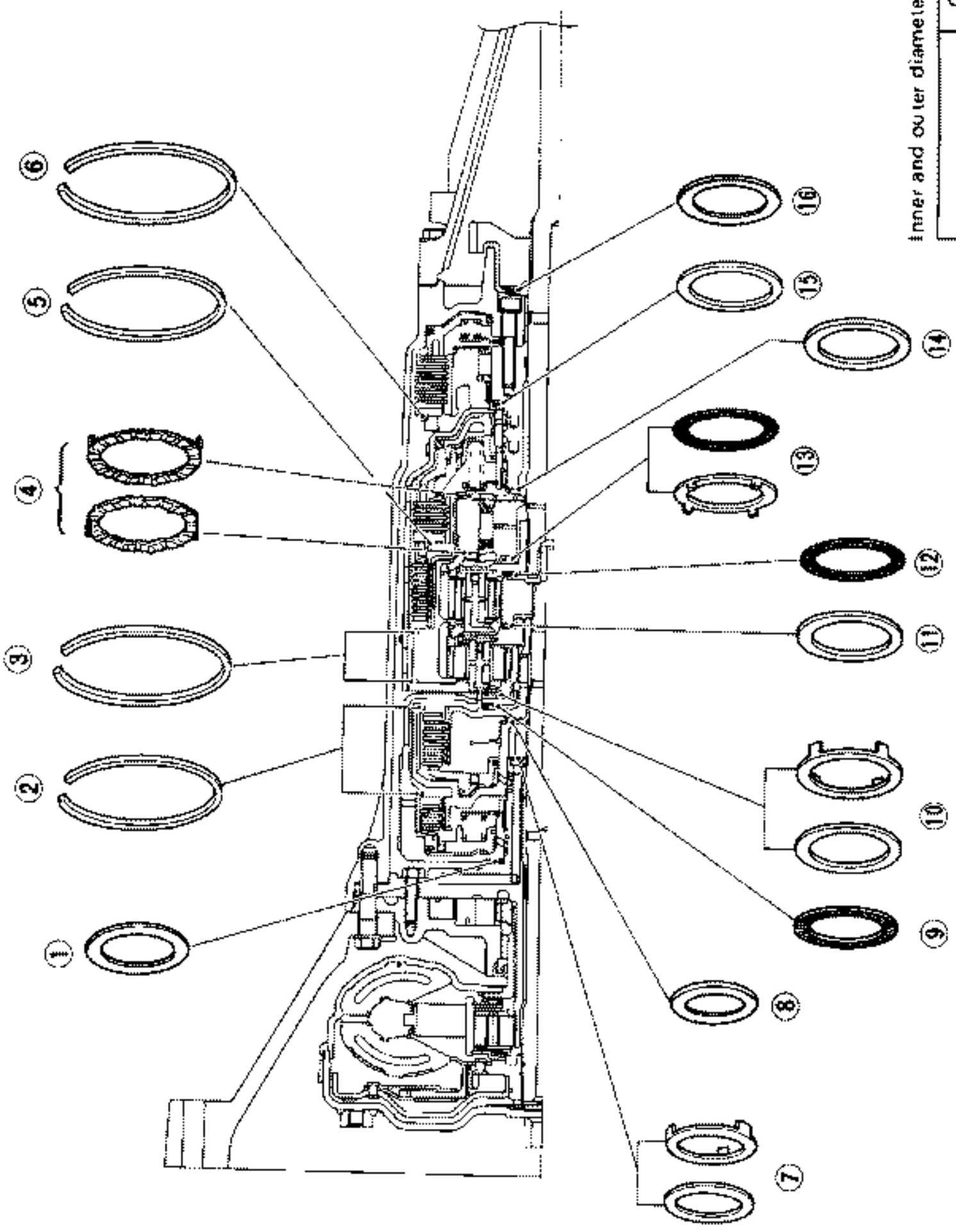

SAT636A

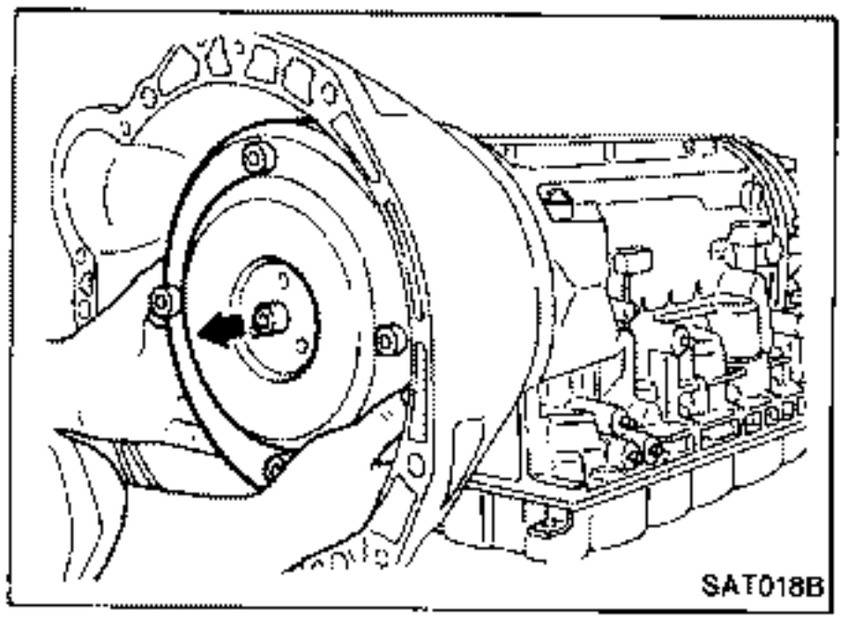

Disassembly

1. Remove torque converter by holding it firmly and turning while pulling straight out.

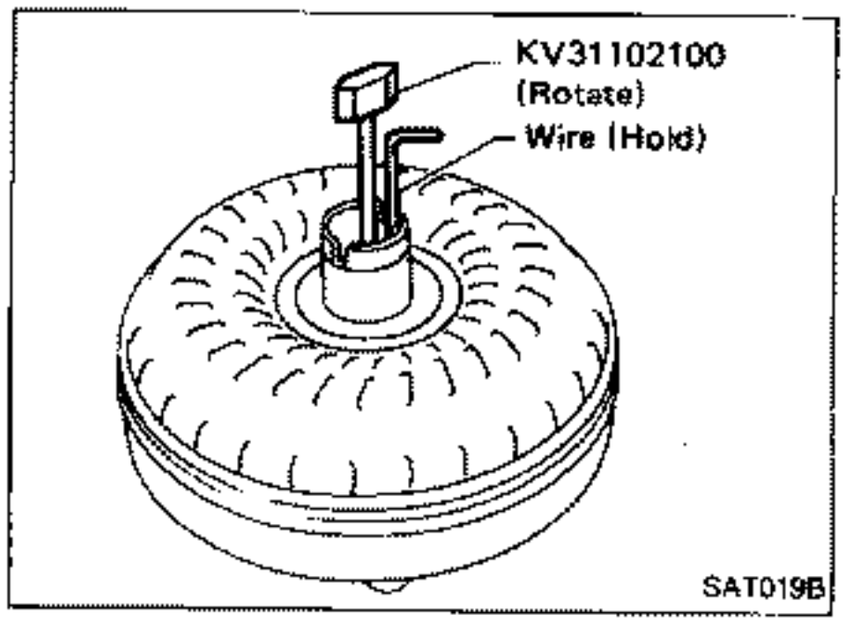

2. Check torque converter one-way clutch.
a. Insert Tool into spline of one-way clutch inner race.
b. Hook bearing support unitized with one-way clutch outer race with suitable wire.
c. Check that one-way clutch inner race rotates only clockwise with Tool while holding bearing support with wire.

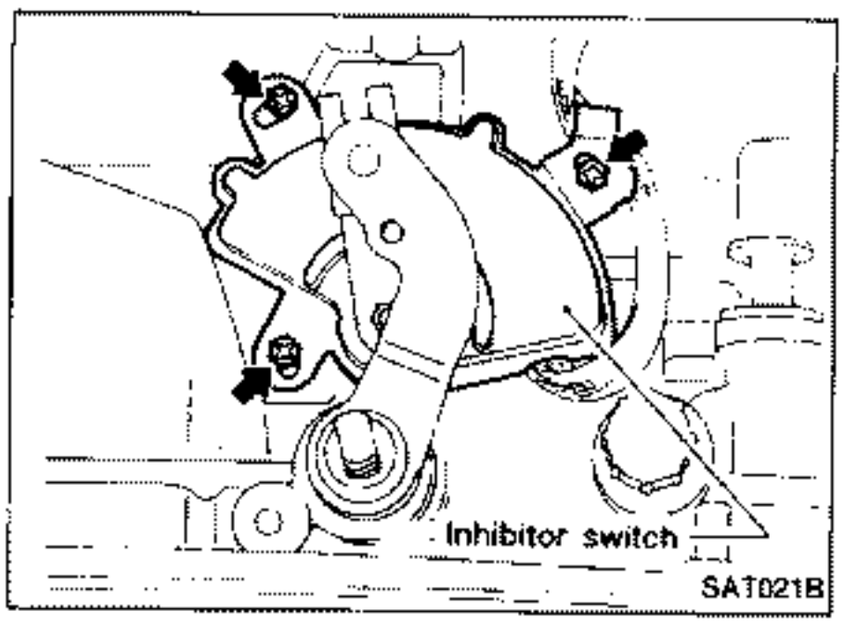

3. Remove inhibitor switch from transmission case.

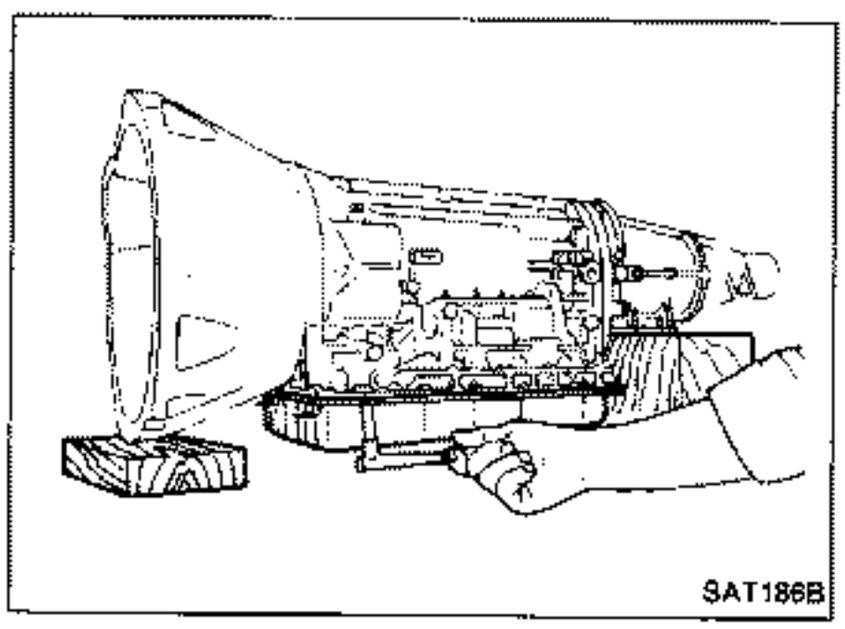

4. Remove oil pan.
a. Drain A.T.F. from rear extension.
b. Raise oil pan by placing wooden blocks under converter housing and rear extension.
c. Separate the oil pan and transmission case.

- **Always place oil pan straight down so that foreign particles inside will not move.**

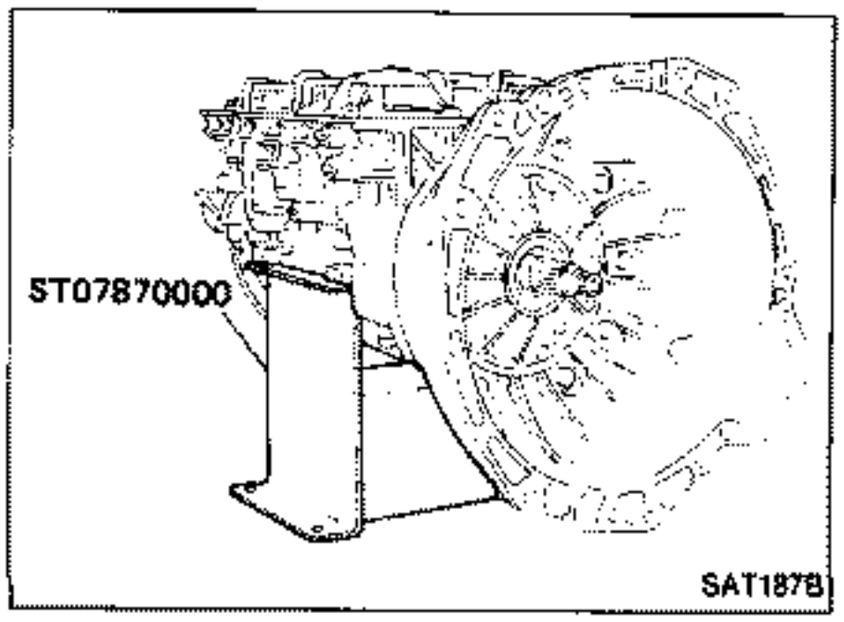

5. Place transmission into Tool with the control valve facing up.

Disassembly (Cont'd)

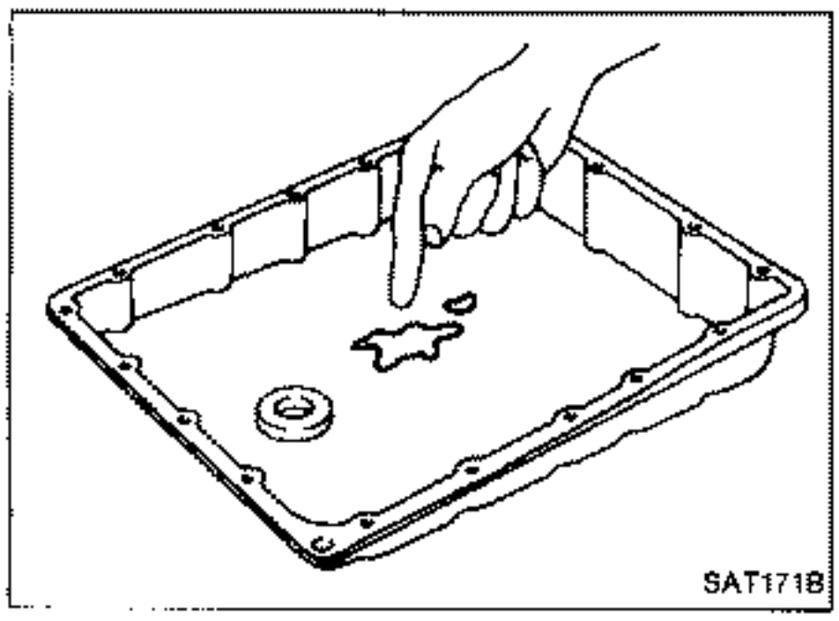

6. Check oil pan and oil strainer for accumulation of foreign particles.
- If materials of clutch facing are found, clutch plates may be worn.
- If metal filings are found, clutch plates, brake bands, etc. may be worn.
- If aluminum filings are found, bushings or aluminum cast parts may be worn.

In above cases, replace torque converter and check unit for cause of particle accumulation.

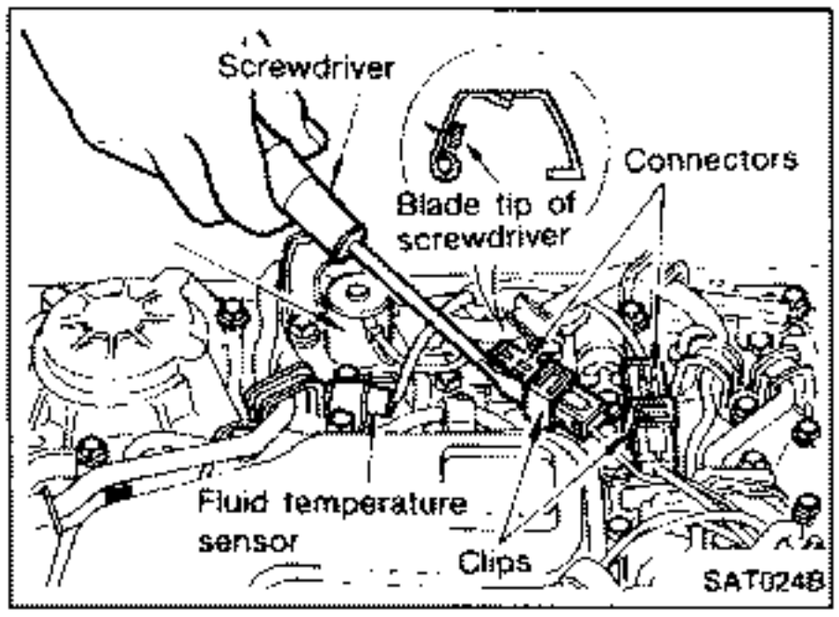

7. Remove lock-up solenoid and fluid temperature sensor connectors.
- **Be careful not to damage connector.**

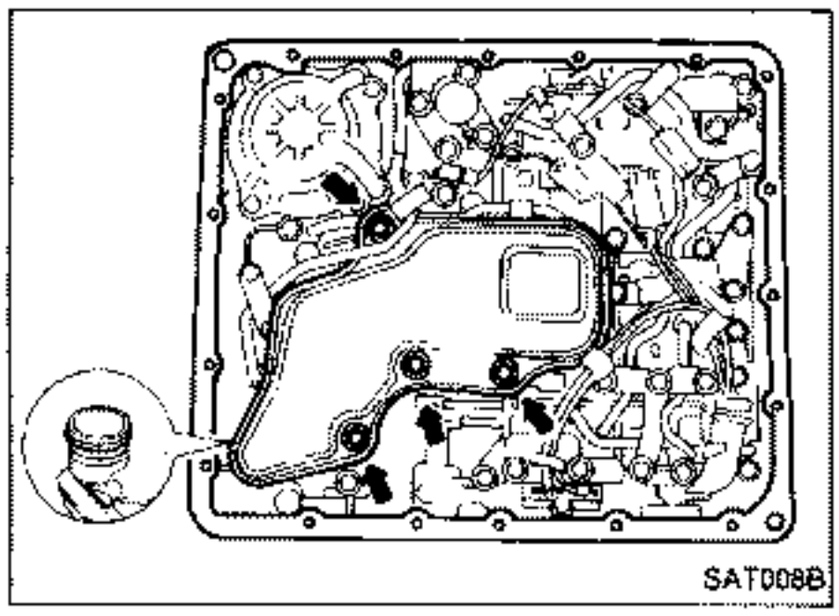

8. Remove oil strainer.

a. Remove oil strainer from control valve assembly. Then remove O-ring from oil strainer.

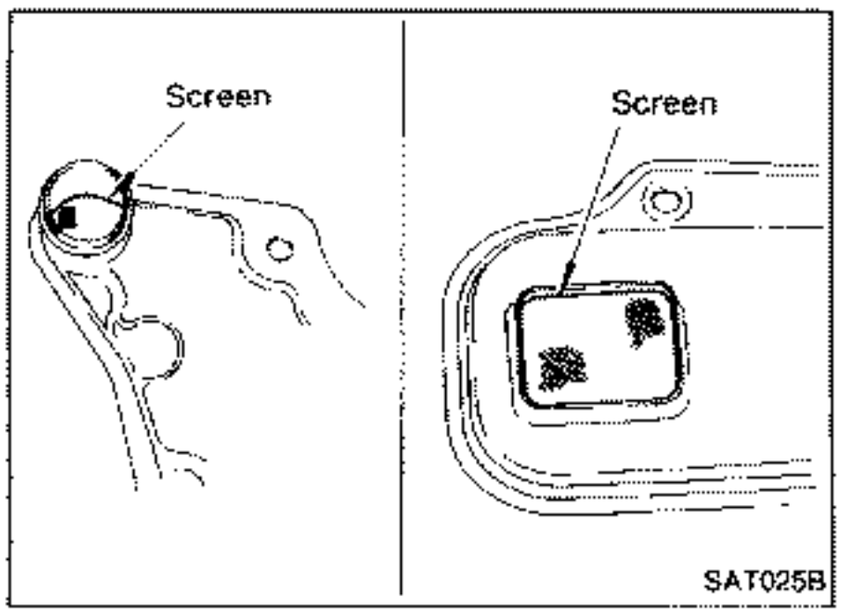

b. Check oil strainer screen for damage.

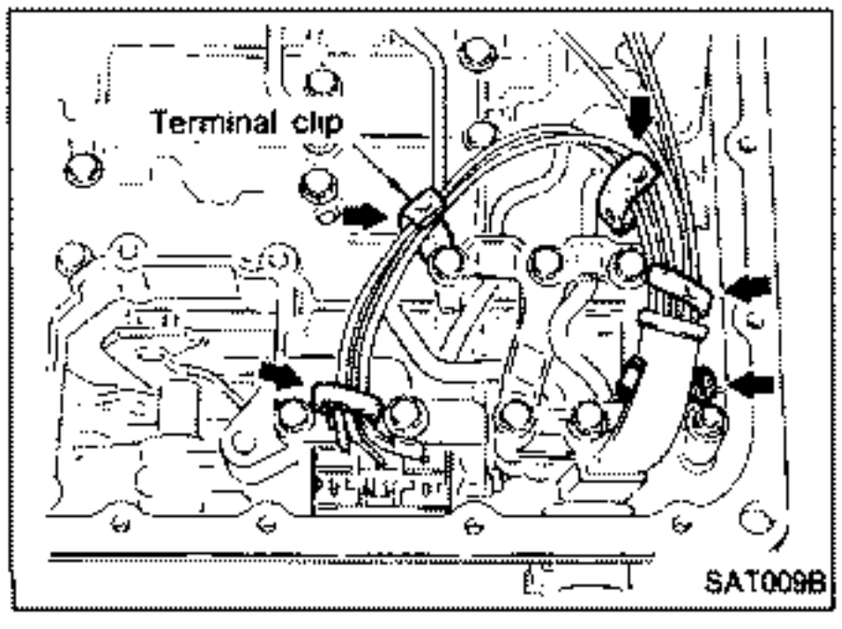

9. Remove control valve assembly.

a. Straighten terminal clips to free terminal cords then remove terminal clips.

Disassembly (Cont'd)

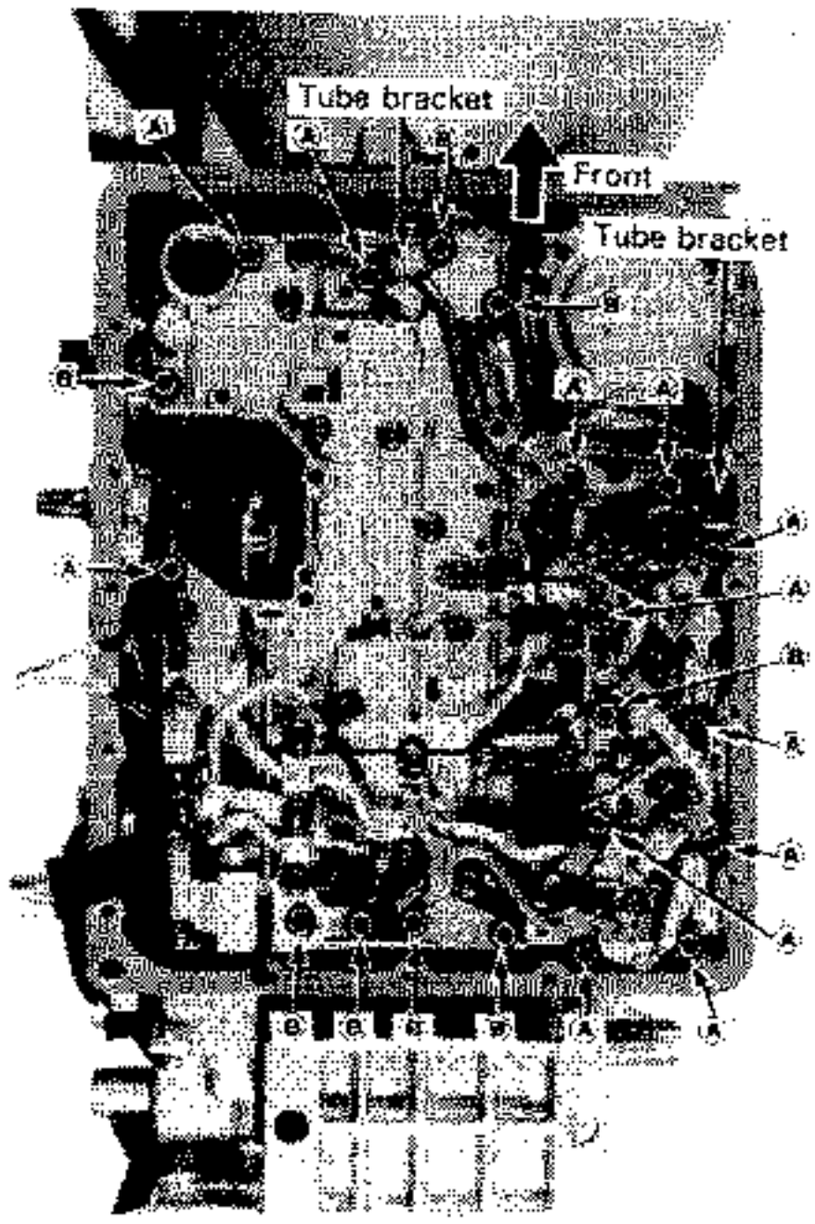

b. Remove bolts Ⓐ and Ⓑ, and remove control valve assembly from transmission.

Bolt	ℓ mm (in)
Ⓐ	33 (1.30)
Ⓑ	45 (1.77)

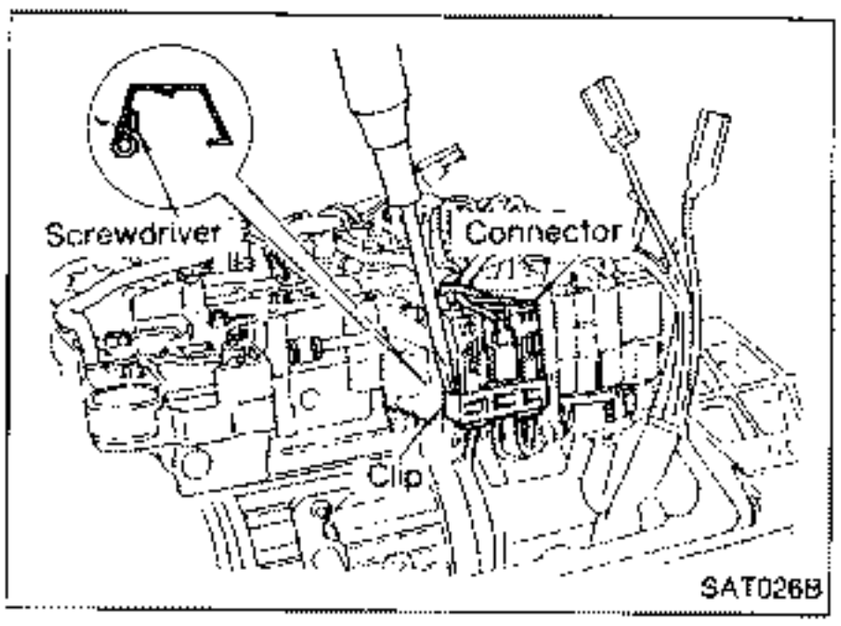

c. Remove solenoid connector.

- **Be careful not to damage connector.**

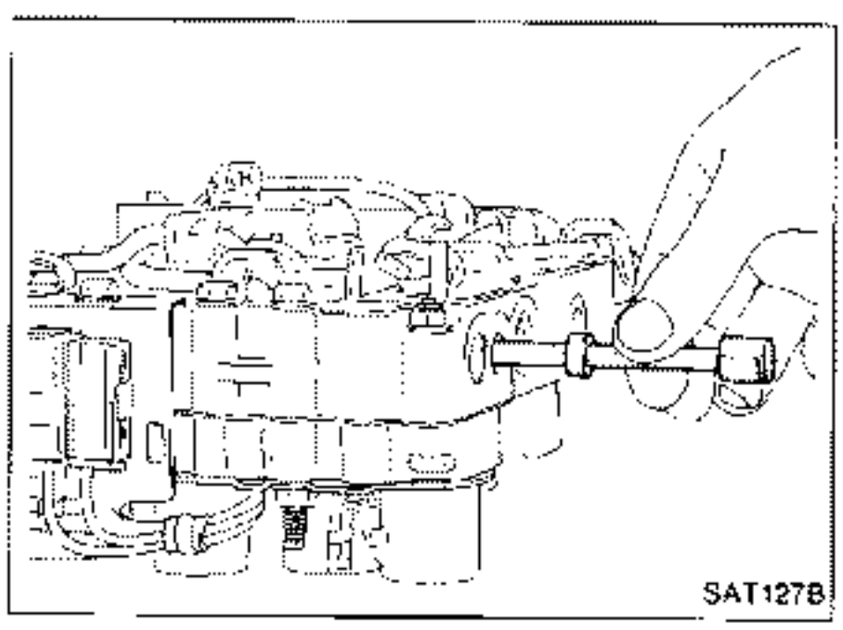

d. Remove manual valve from control valve assembly.

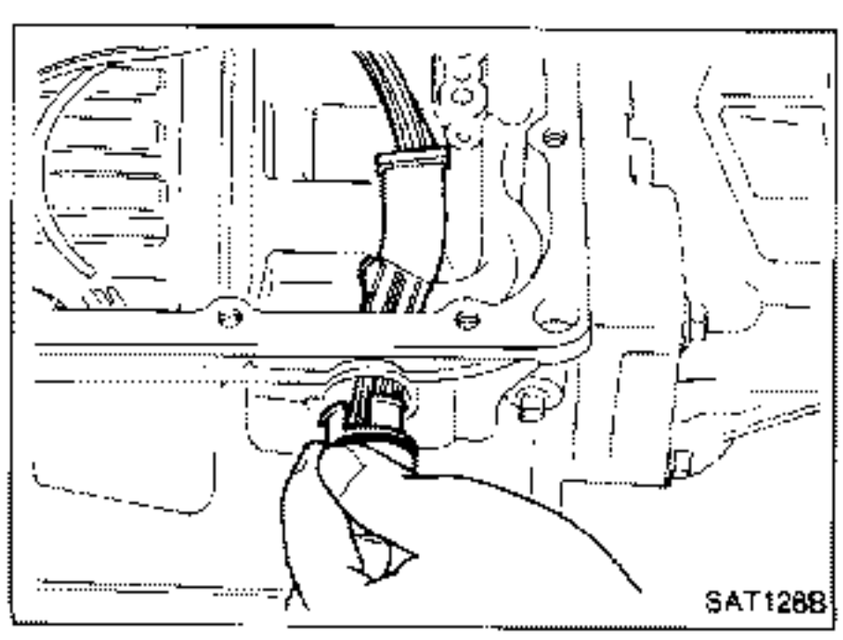

10. Remove terminal cord assembly from transmission case while pushing on stopper.

- **Be careful not to damage cord.**
- **Do not remove terminal cord assembly unless it is damaged.**

Disassembly (Cont'd)

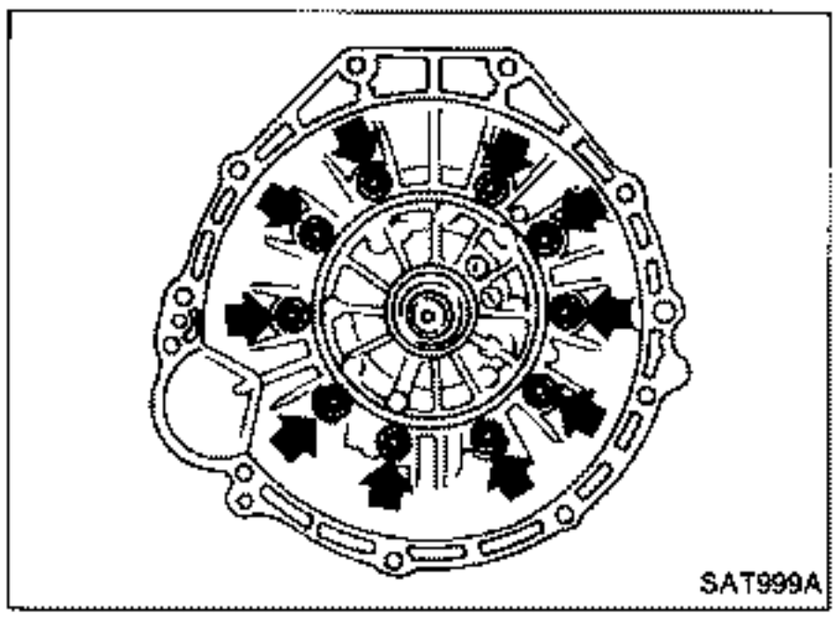
SAT999A

11. Remove converter housing from transmission case.

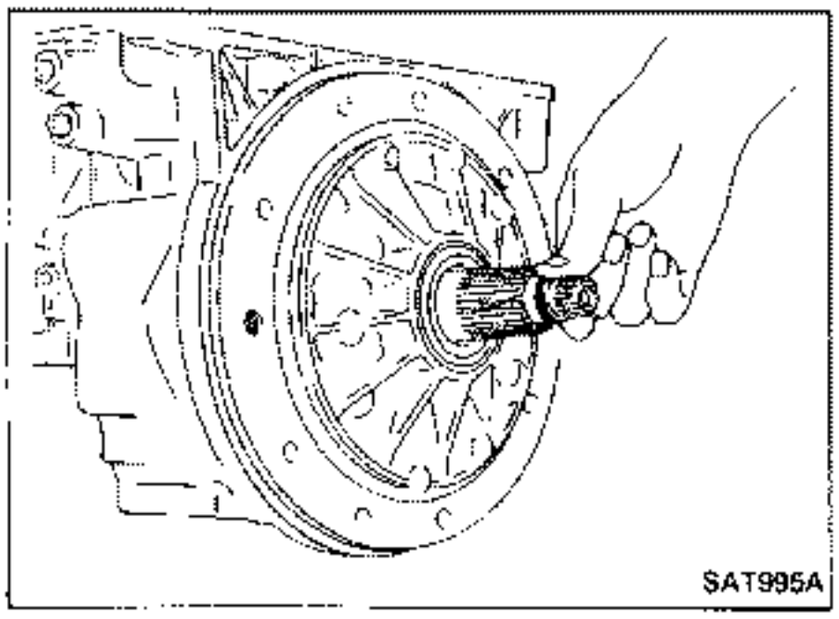
SAT995A

12. Remove O-ring from input shaft.

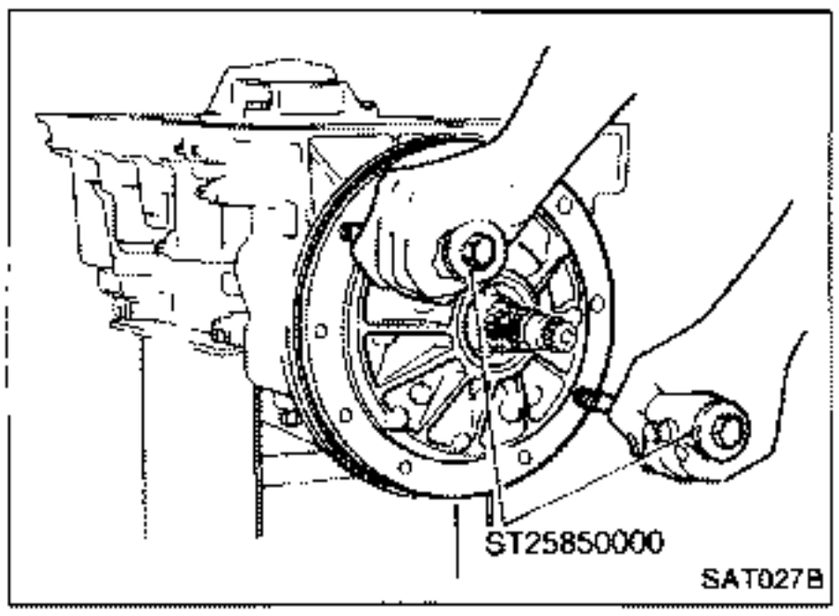

SAT027B

13. Remove oil pump assembly.
a. Attach Tool to oil pump assembly and extract it evenly from transmission case.

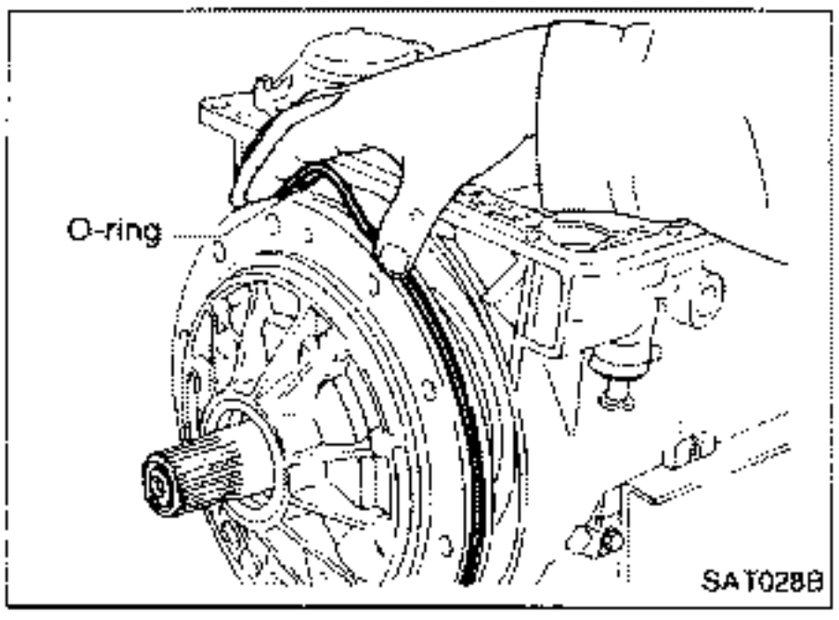

SAT028B

b. Remove O-ring from oil pump assembly.
c. Remove traces of sealant from oil pump housing.
- **Be careful not to scratch pump housing.**

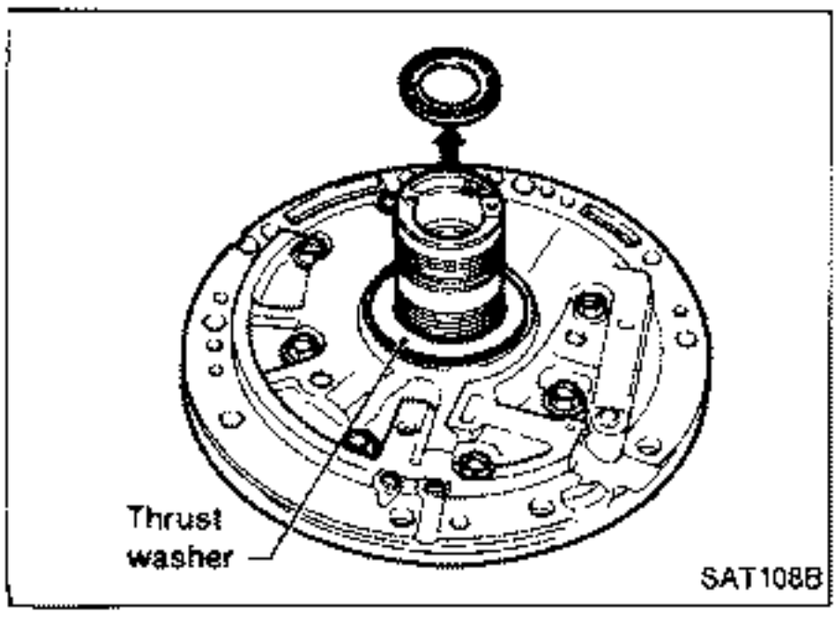

SAT108B

d. Remove needle bearing and thrust washer from oil pump assembly.

Disassembly (Cont'd)

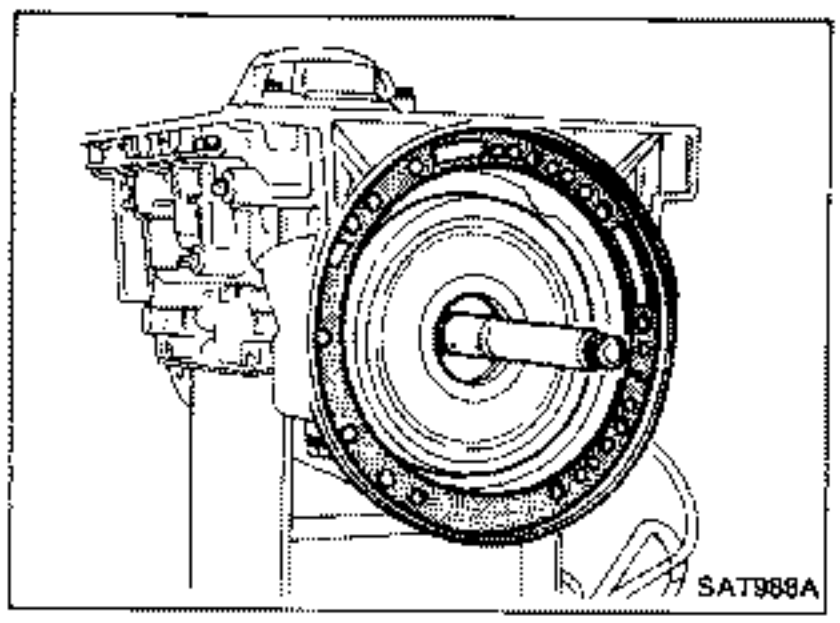

14. Remove input shaft and oil pump gasket.

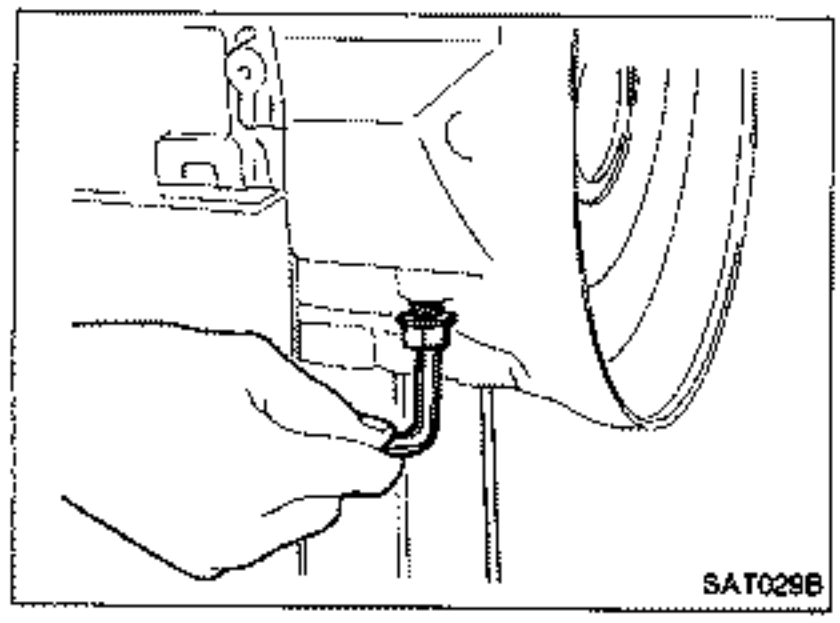

15. Remove brake band and band strut.
a. Loosen lock nut and remove band servo anchor end pin from transmission case.

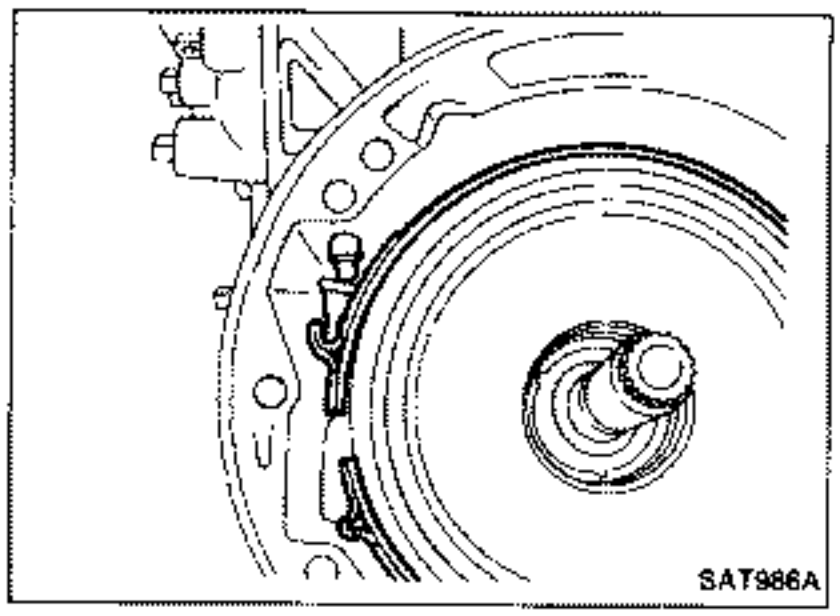

b. Remove brake band and band strut from transmission case.

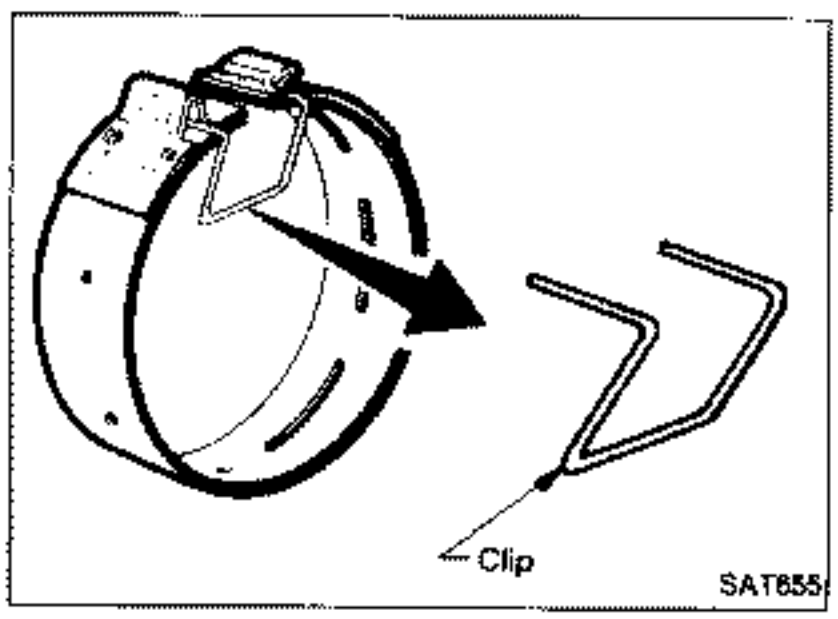

c. Hold brake band in a circular shape with clip.

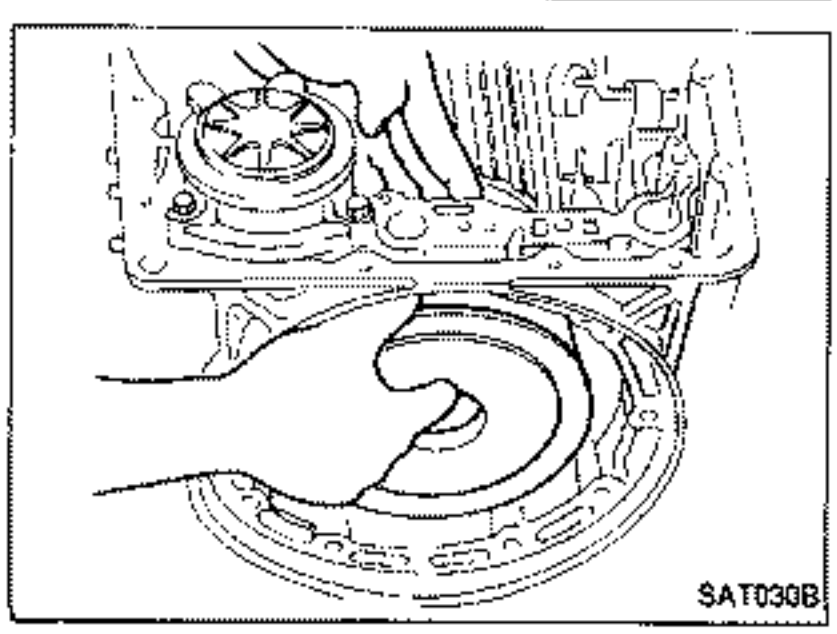

16. Remove front side clutch and gear components.
a. Remove clutch pack (reverse clutch, high clutch and front sun gear) from transmission case.

Disassembly (Cont'd)

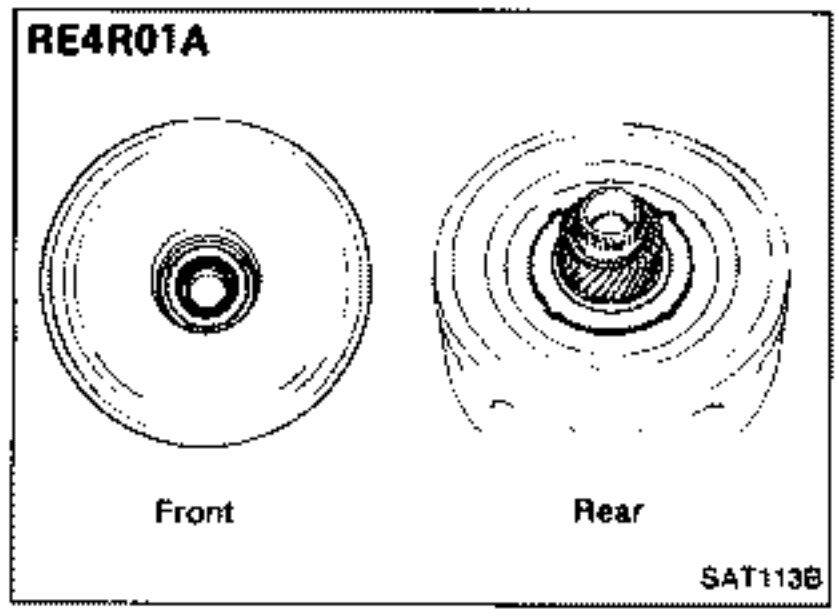

b. Remove front bearing race from clutch pack.
c. Remove rear bearing race or front needle bearing from clutch pack.

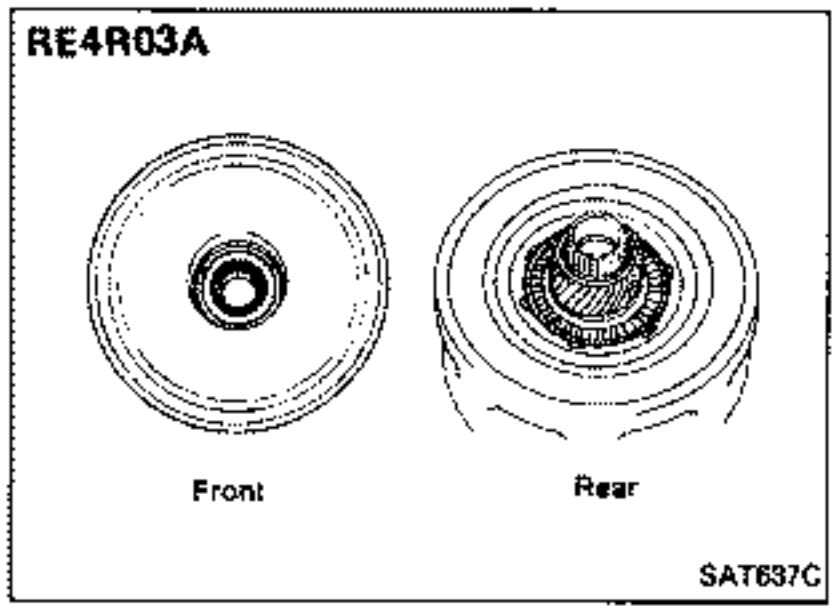

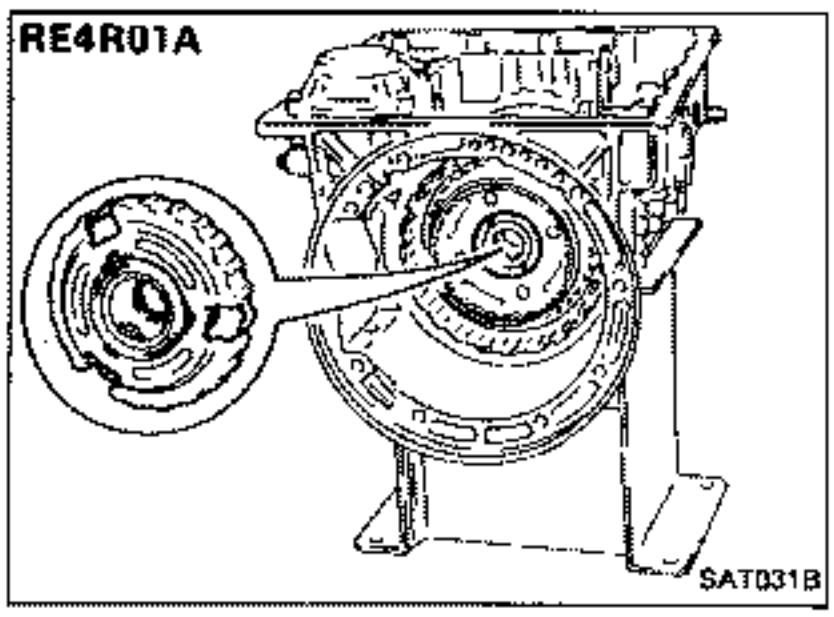

d. Remove front planetary carrier from transmission case.

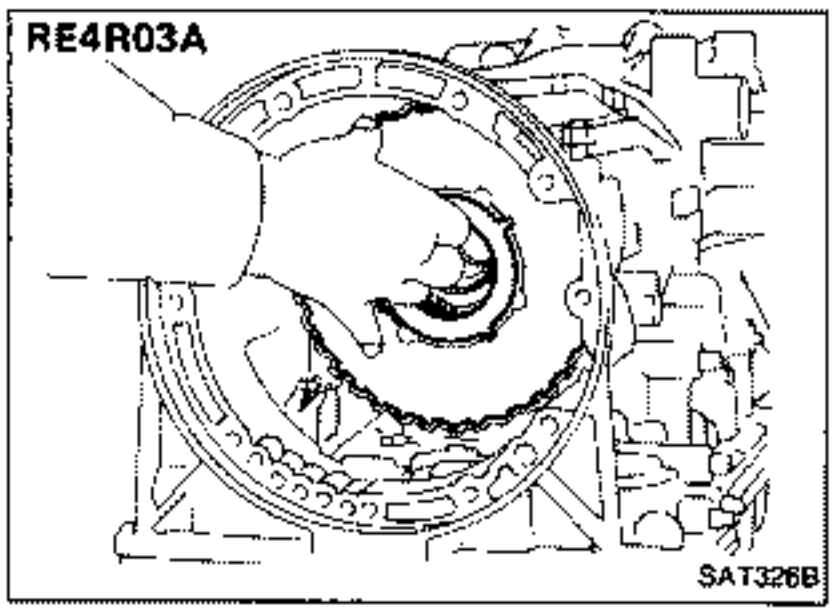

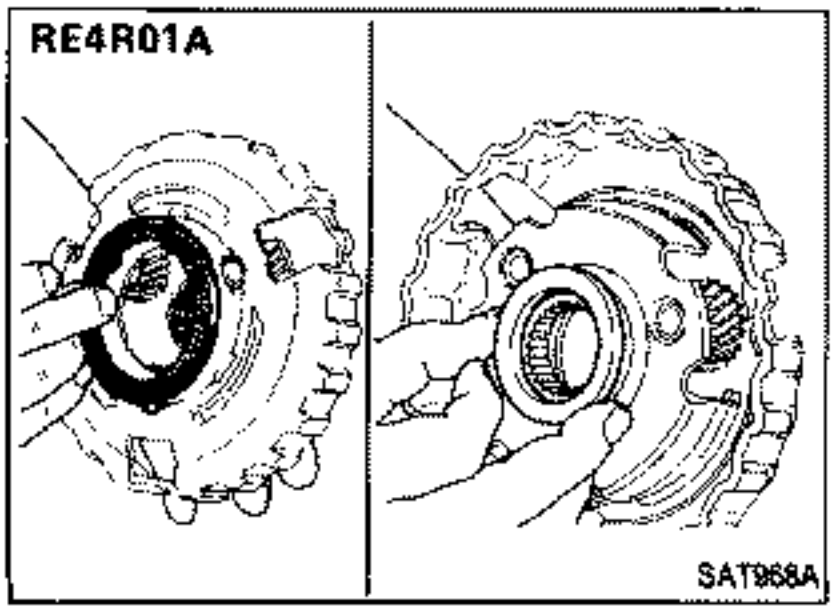

e. Remove front needle bearing or front bearing race from front planetary carrier.
f. Remove rear needle bearing from front planetary carrier.

Disassembly (Cont'd)

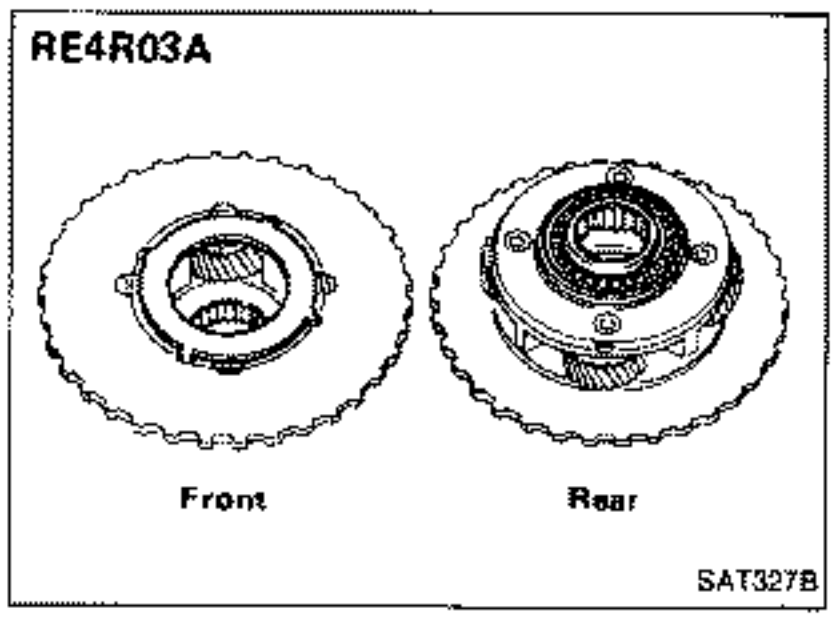

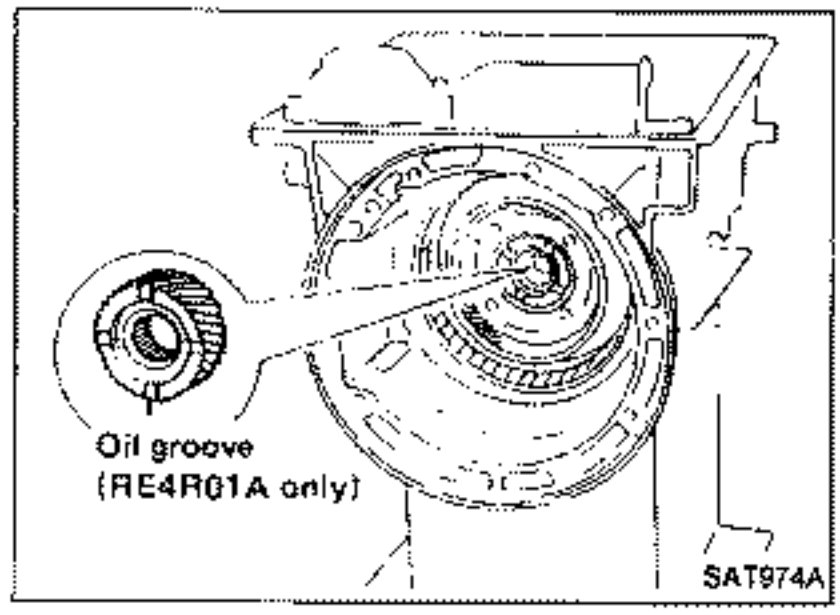

g. Remove rear sun gear from transmission case.

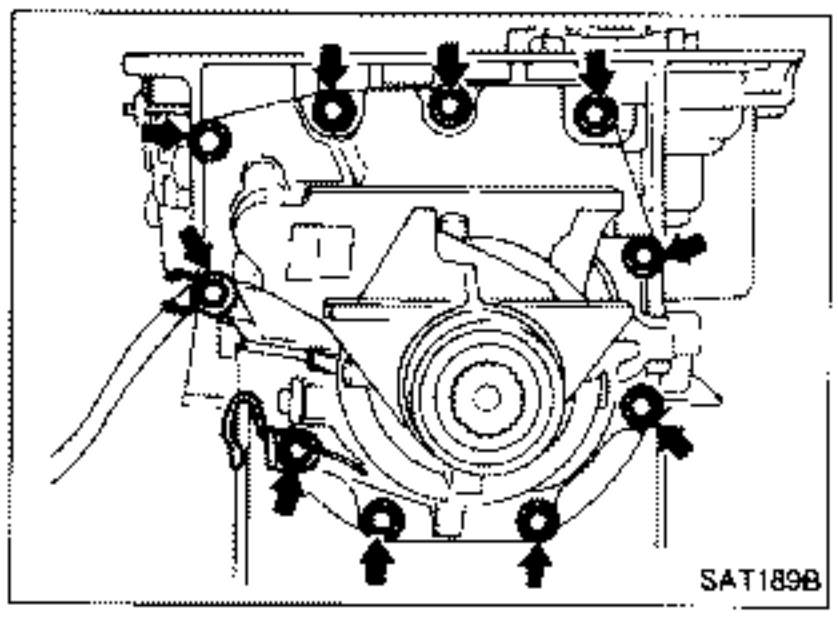

17. Remove rear extension.
a. Remove rear extension from transmission case.
b. Remove rear extension gasket from transmission case.

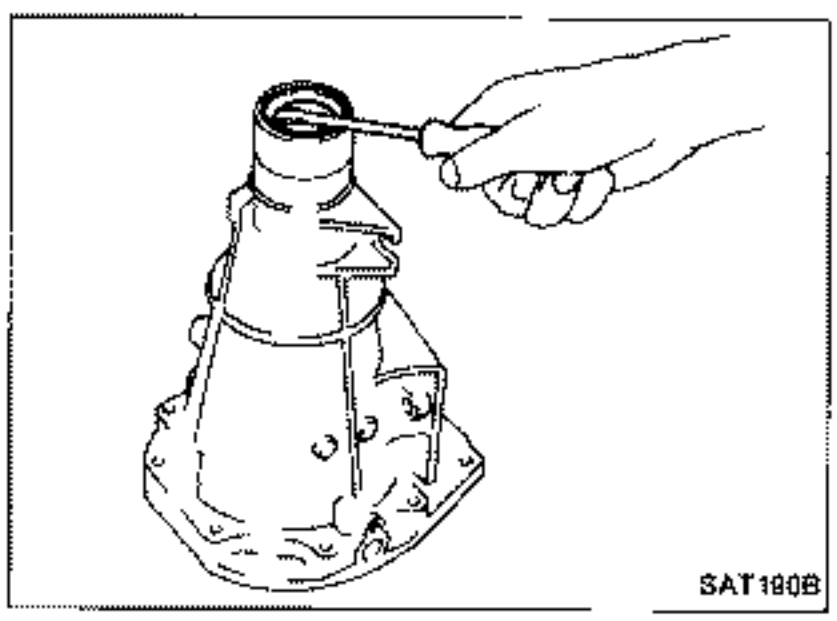

c. Remove oil seal from rear extension.

- **Do not remove oil seal unless it is to be replaced.**

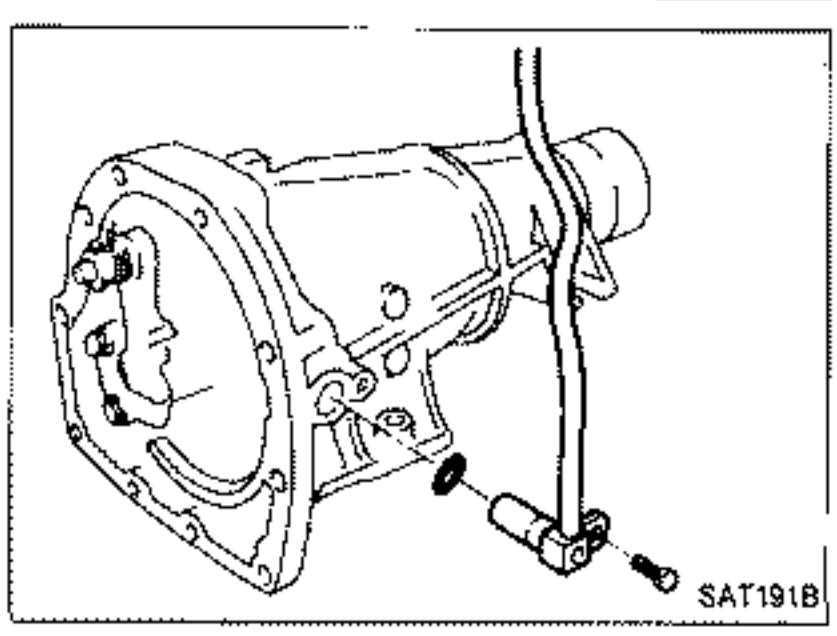

d. Remove revolution sensor from rear extension.
e. Remove O-ring from revolution sensor.

Disassembly (Cont'd)

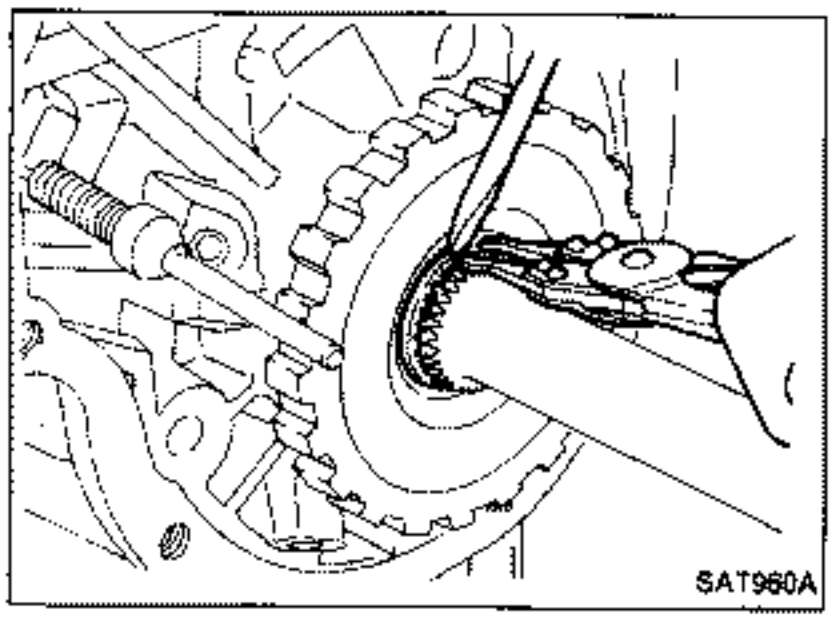

18. Remove output shaft and parking gear.
a. Remove rear snap ring from output shaft.

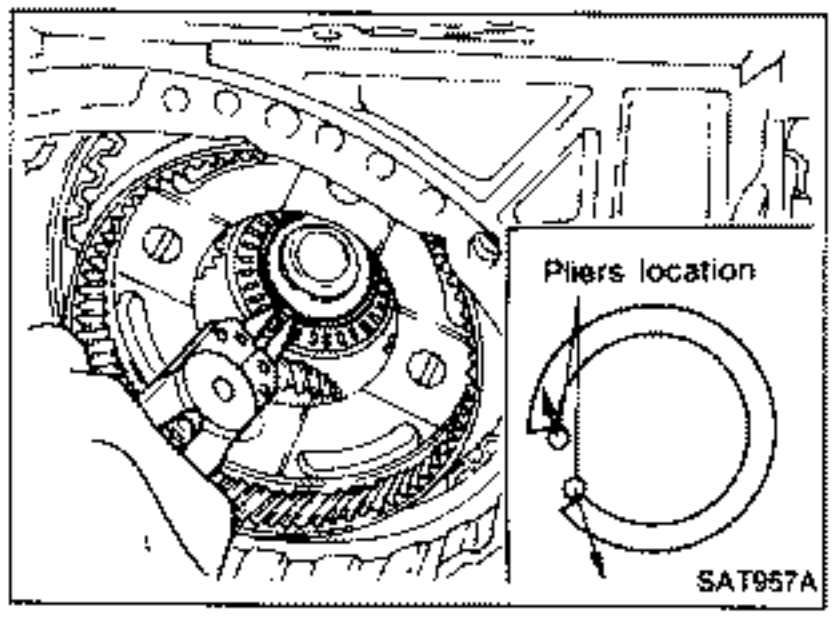

b. Slowly push output shaft all the way forward.
- **Do not use excessive force.**

c. Remove snap ring from output shaft.

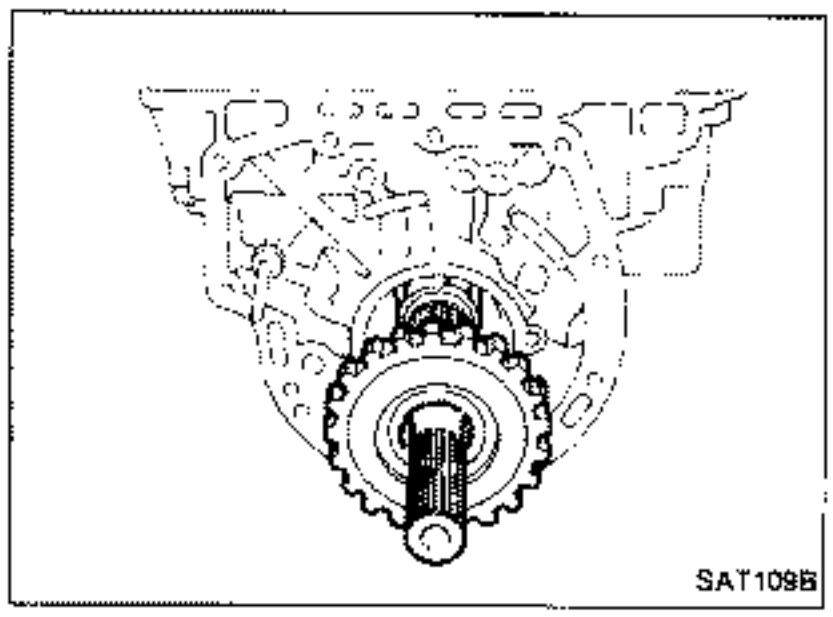

d. Remove output shaft and parking gear as a unit from transmission case.
e. Remove parking gear from output shaft.

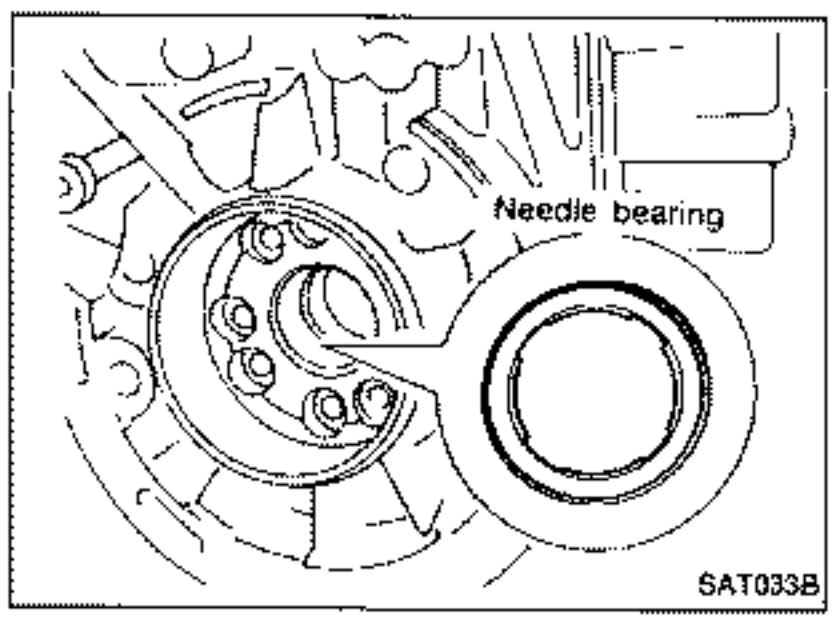

f. Remove needle bearing from transmission case.

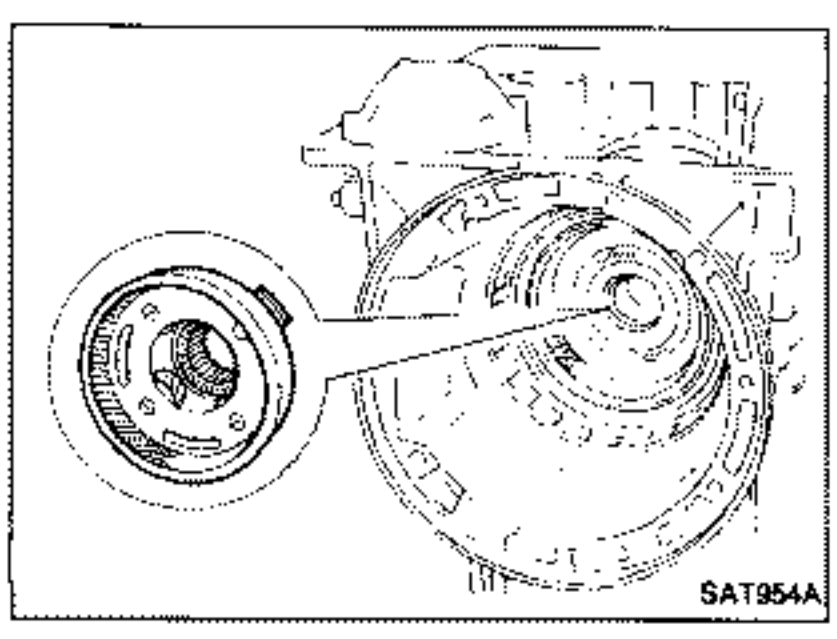

19. Remove rear side clutch and gear components.
a. Remove front internal gear.

Disassembly (Cont'd)

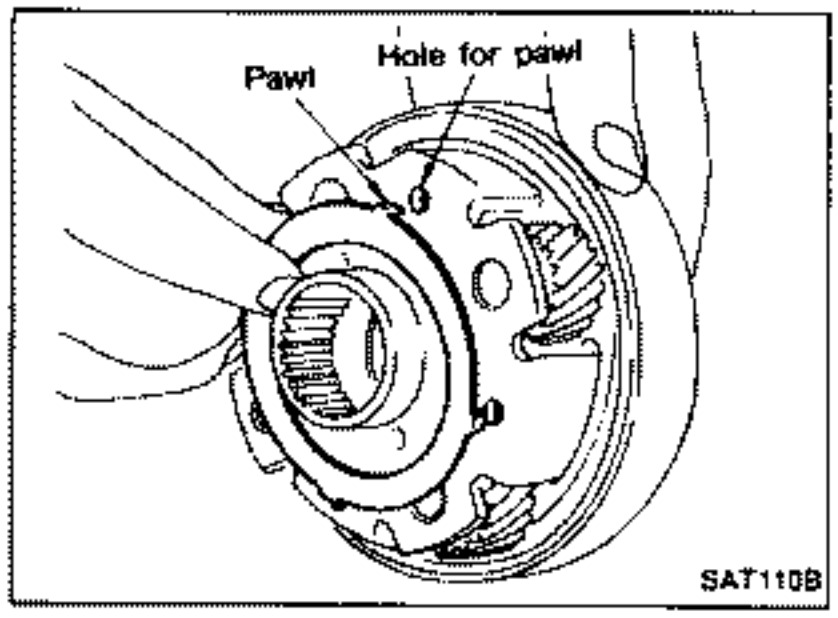

b. Remove bearing race from front internal gear.

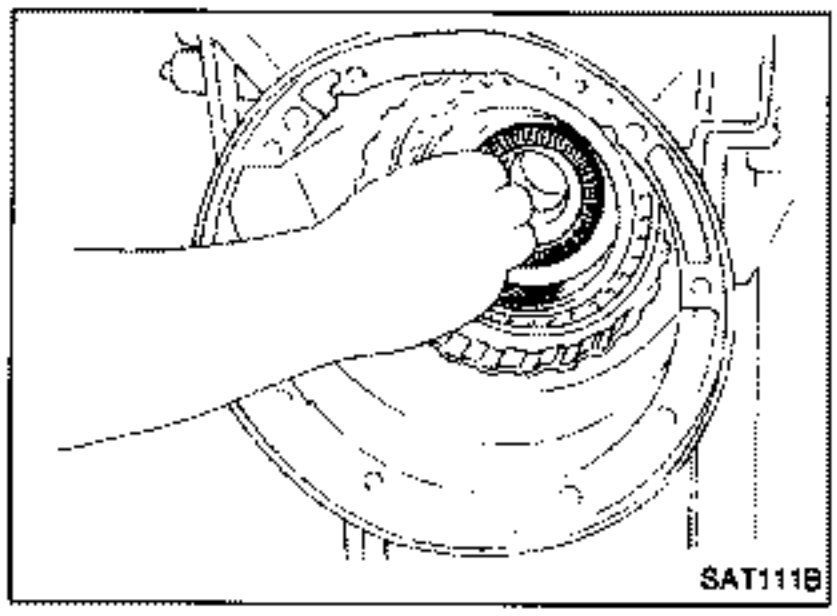

c. Remove needle bearing from rear internal gear.

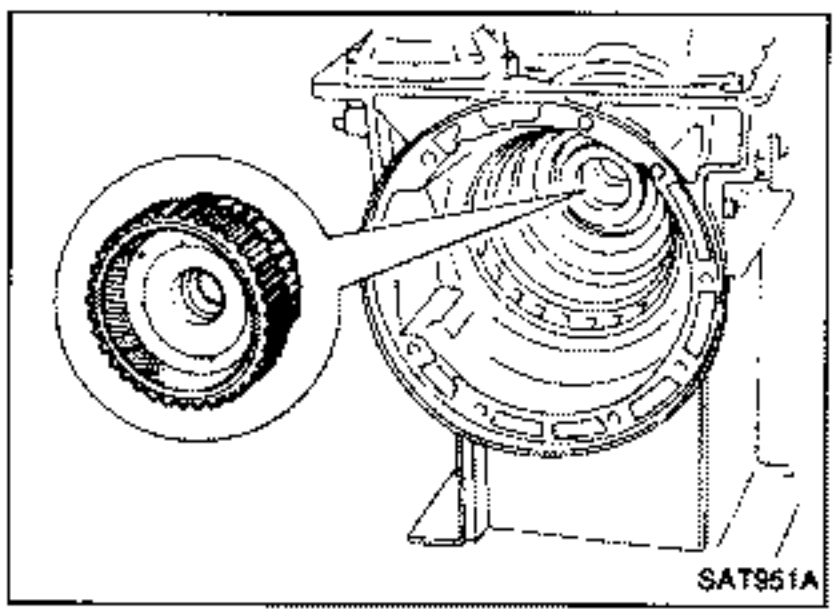

d. Remove rear internal gear, forward clutch hub and overrun clutch hub as a set from transmission case.

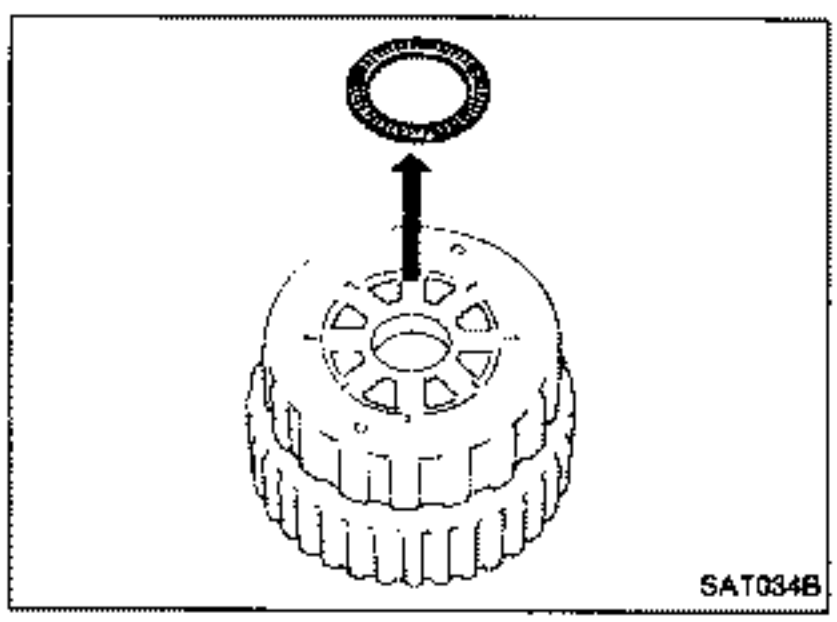

e. Remove needle bearing from overrun clutch hub.

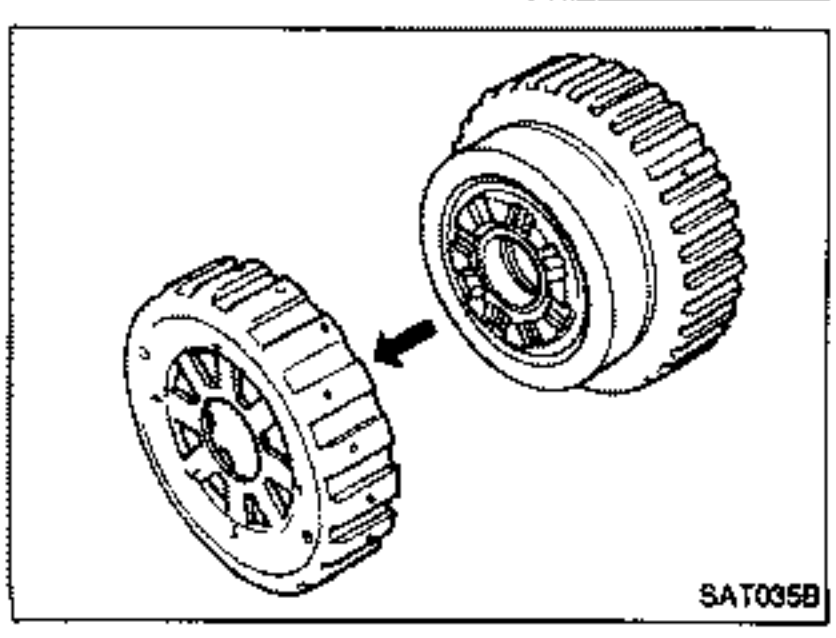

f. Remove overrun clutch hub from rear internal gear and forward clutch hub.

Disassembly (Cont'd)

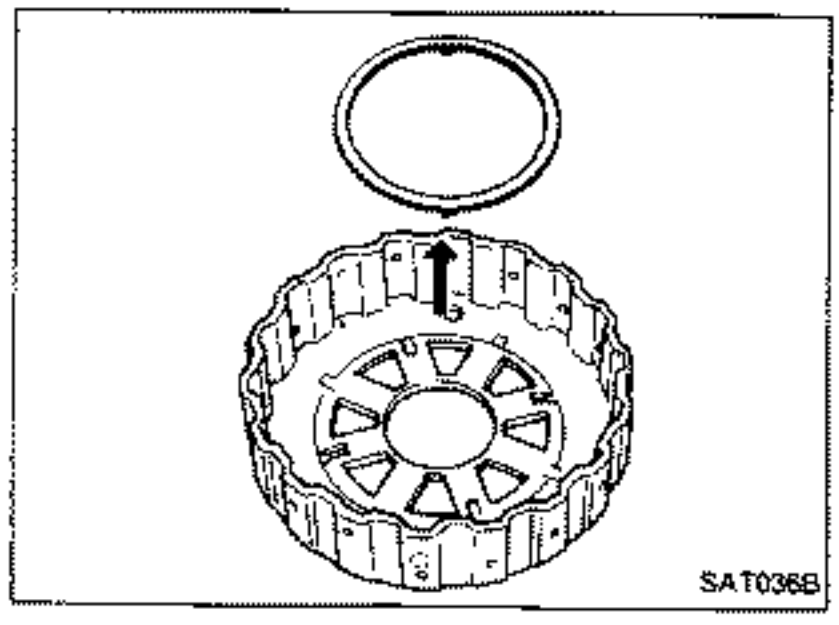

g. Remove thrust washer from overrun clutch hub.

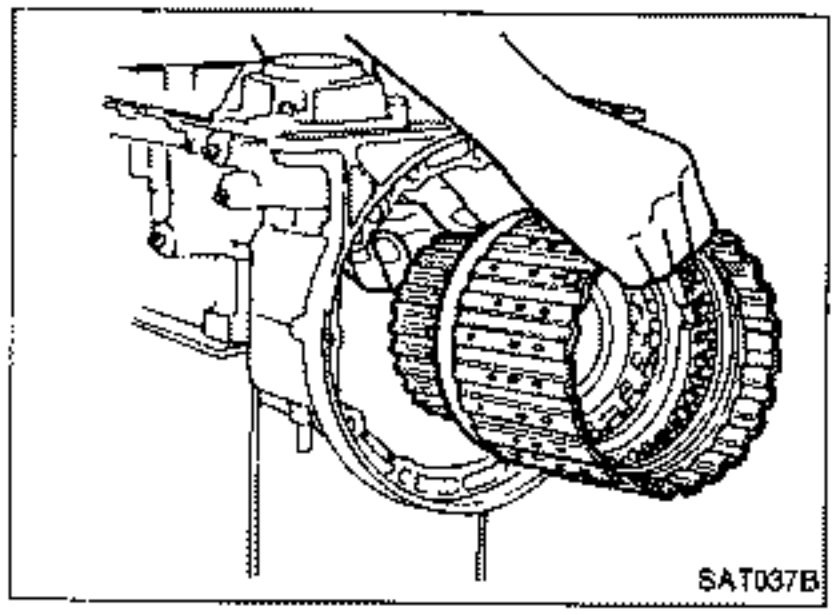

h. Remove forward clutch assembly from transmission case.

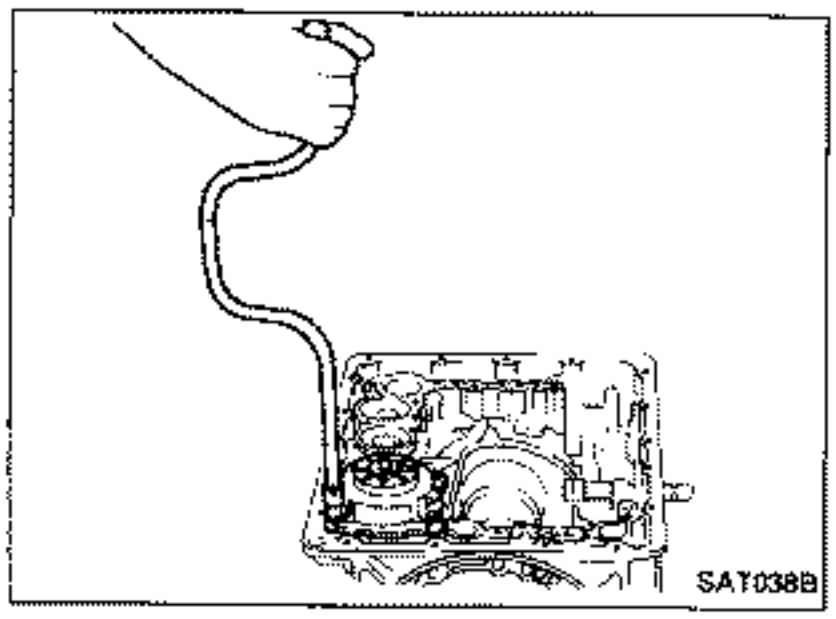

20. Remove band servo and accumulator components.
a. Remove band servo retainer from transmission case.

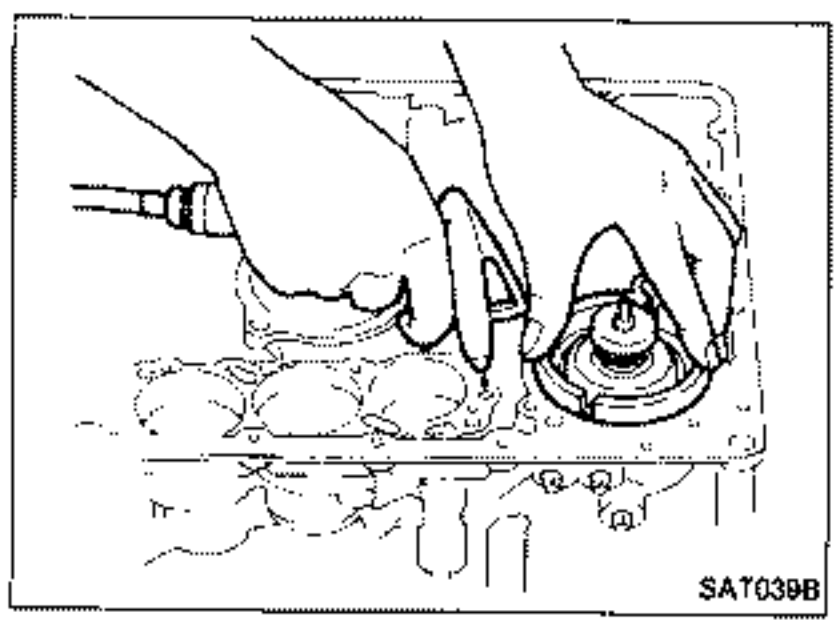

b. Apply compressed air to oil hole until band servo piston comes out of transmission case.

- **Hold piston with a rag and gradually direct air to oil hole.**

c. Remove return springs.

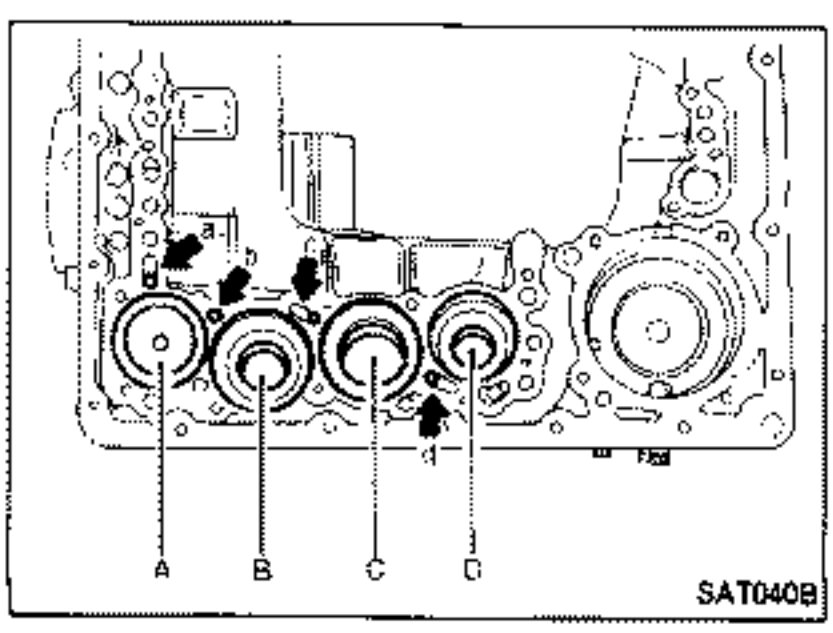

d. Remove springs from accumulator pistons B, C and D.
e. Apply compressed air to each oil hole until piston comes out.

- **Hold piston with a rag and gradually direct air to oil hole.**

Identification of accumulator pistons	A	B	C	D
Identification of oil holes	a	b	c	d

Disassembly (Cont'd)

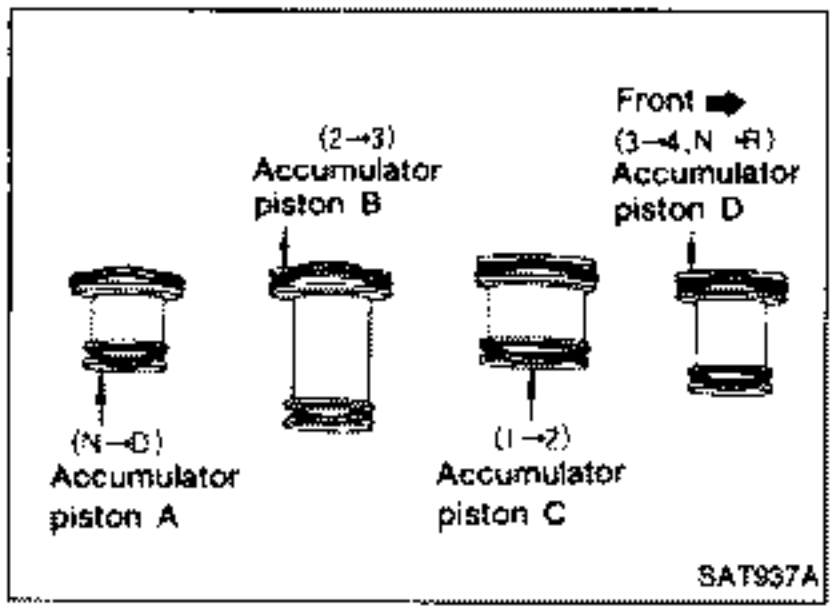

f. Remove O-ring from each piston.

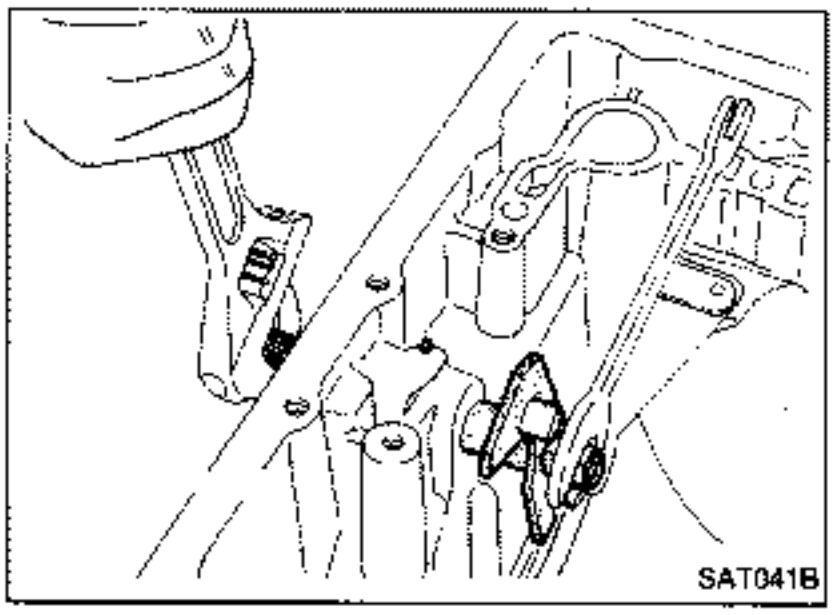

21. Remove manual shaft components, if necessary.

a. Hold width across flats of manual shaft (outside the transmission case) and remove lock nut from shaft.

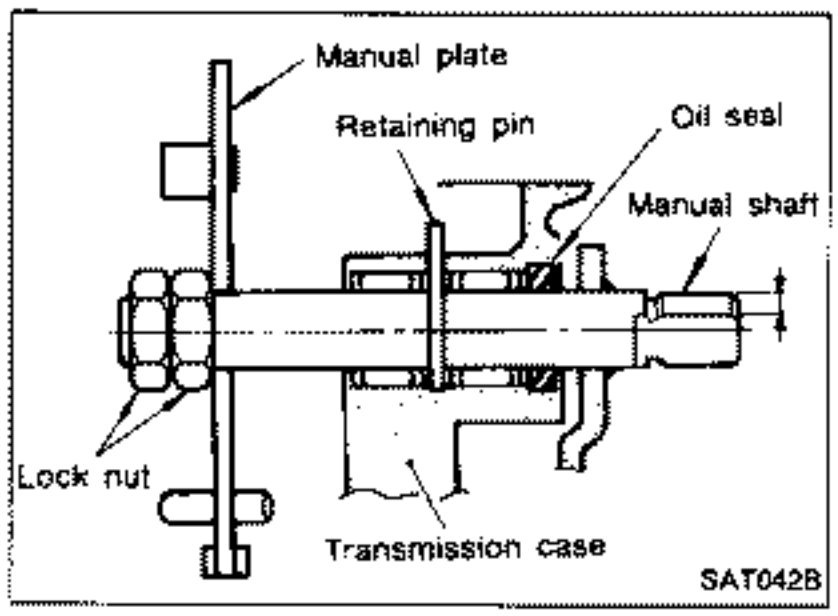

b. Remove retaining pin from transmission case.

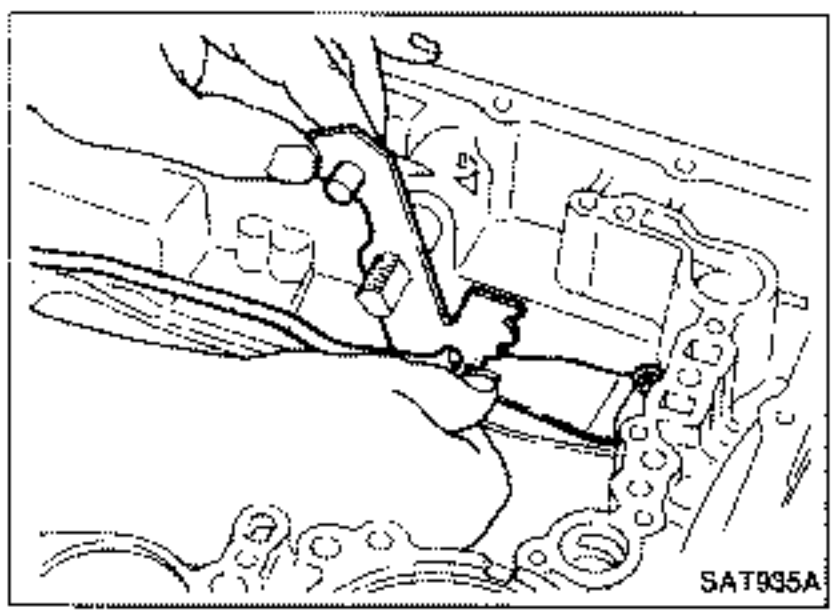

c. While pushing detent spring down, remove manual plate and parking rod from transmission case.

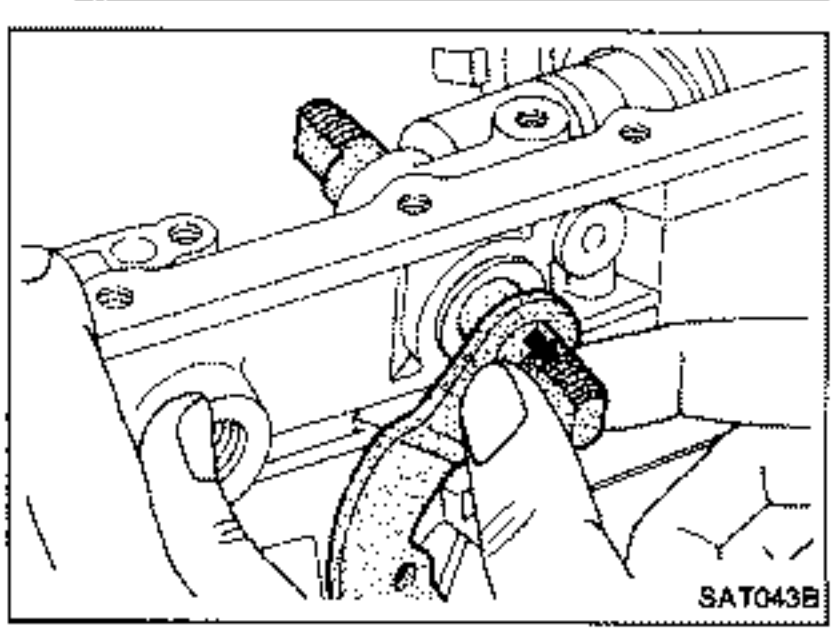

d. Remove manual shaft from transmission case.

Z.ONE.DATSUN

Disassembly (Cont'd)

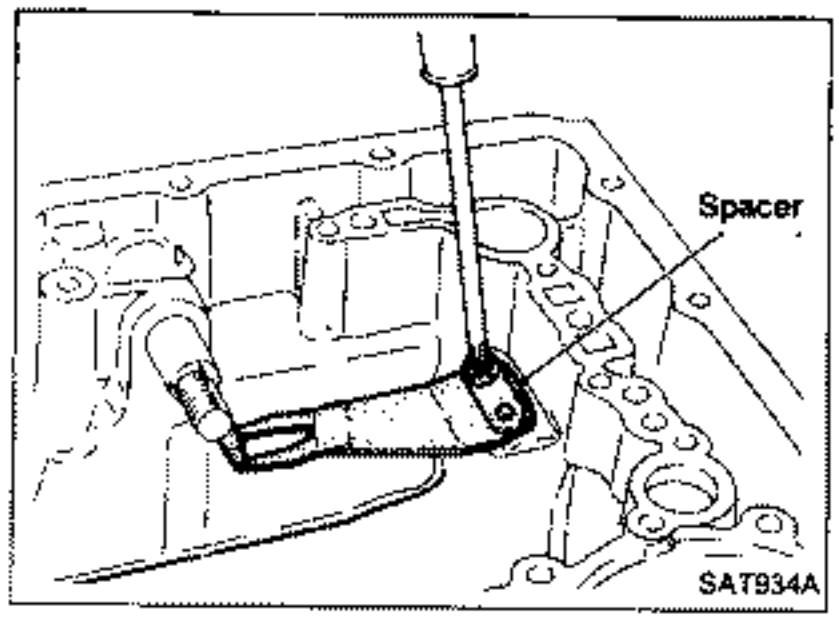

e. Remove spacer and detent spring from transmission case.

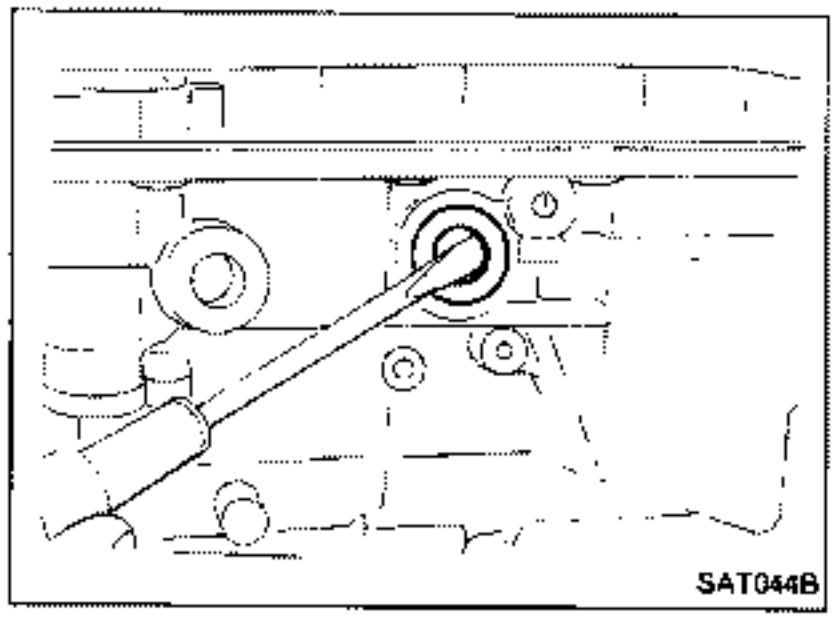

f. Remove oil seal from transmission case.

Oil Pump

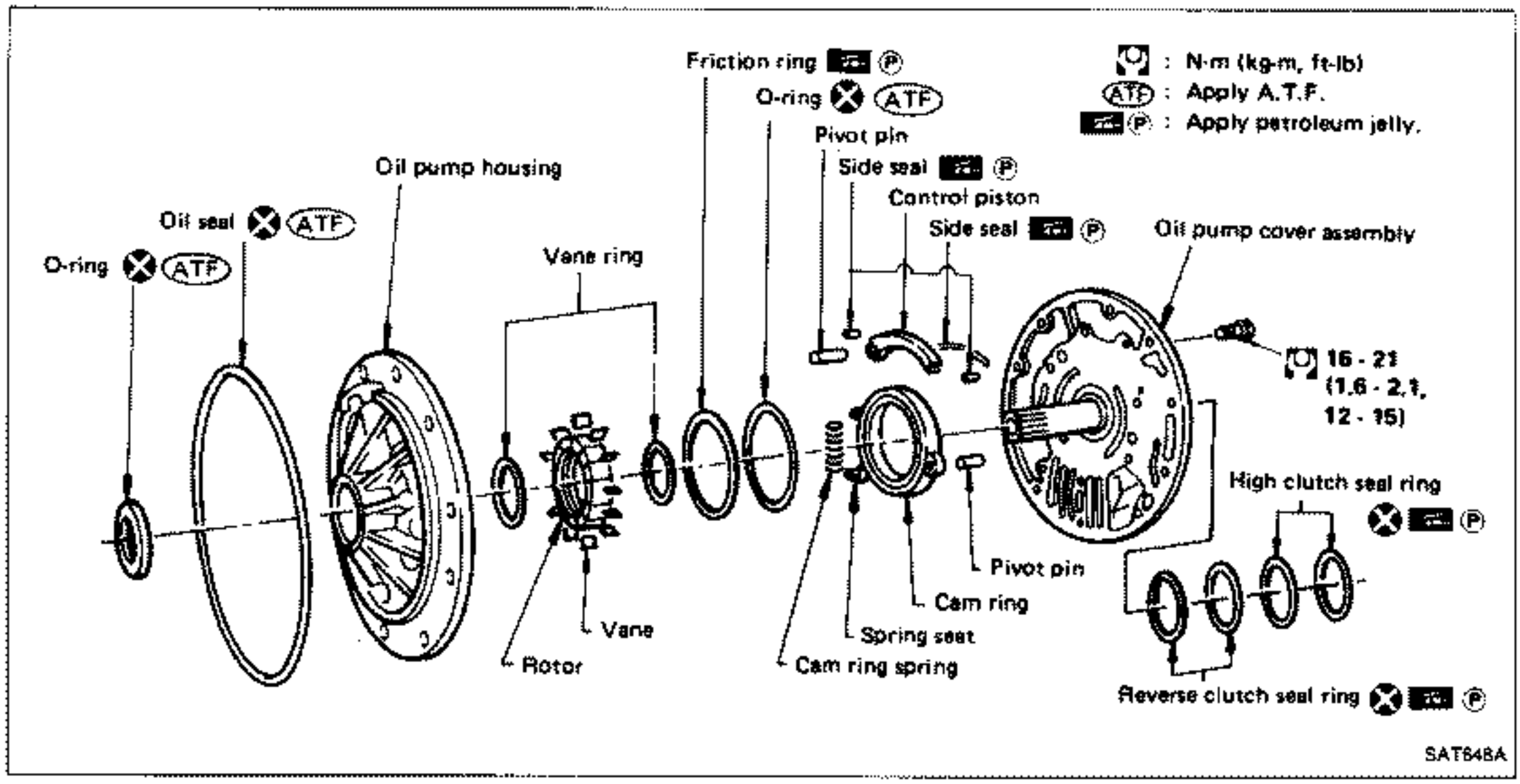

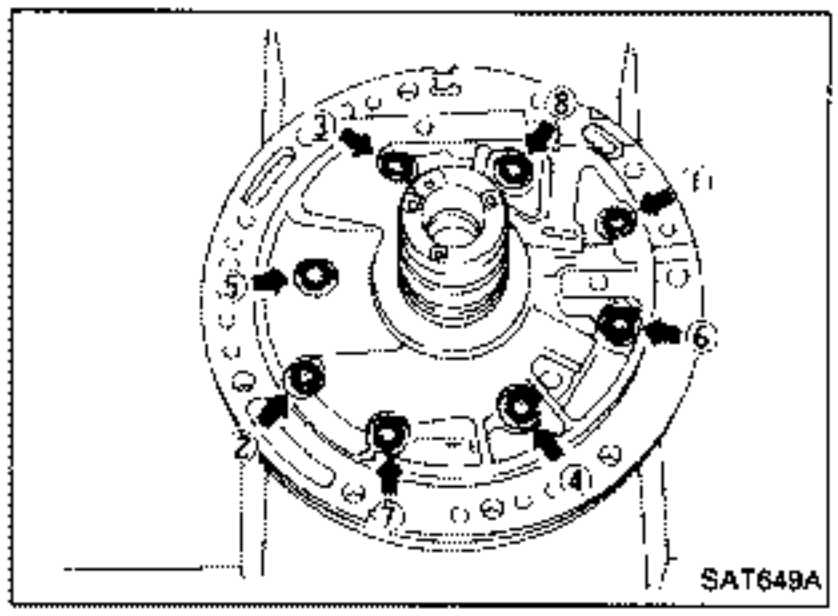

DISASSEMBLY

1. Loosen bolts in numerical order and remove oil pump cover.

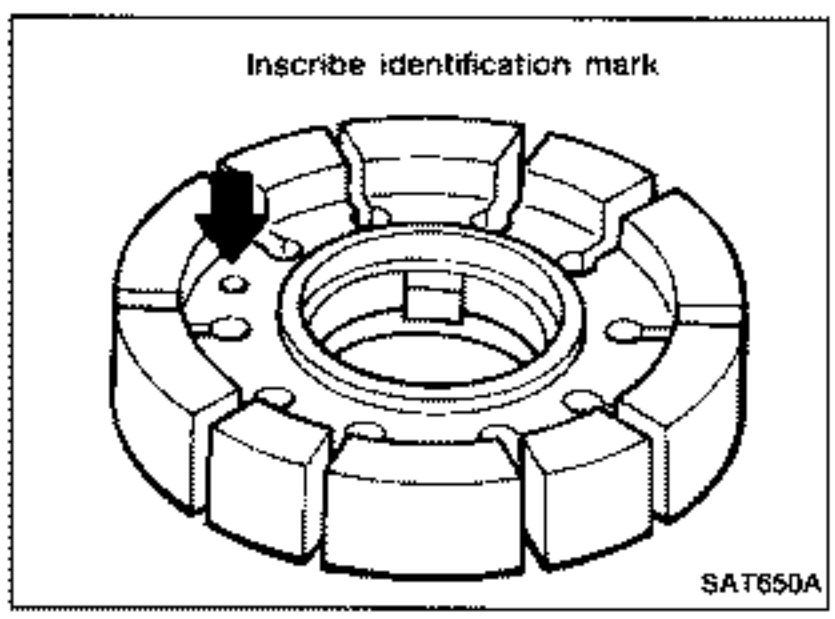

2. Remove rotor, vane rings and vanes.
- **Inscribe a mark on back of rotor for identification of fore-aft direction when reassembling rotor. Then remove rotor.**

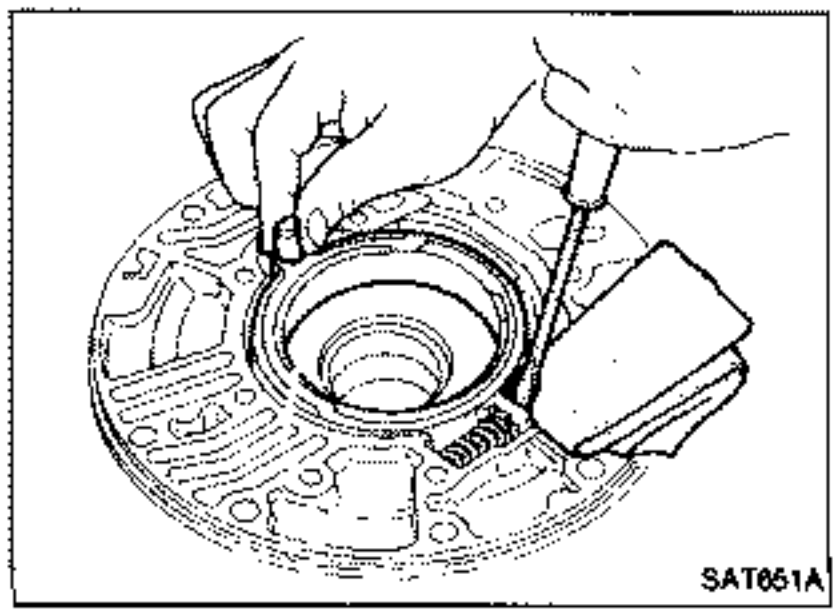

3. While pushing on cam ring remove pivot pin.
- **Be careful not to scratch oil pump housing.**

Oil Pump (Cont'd)

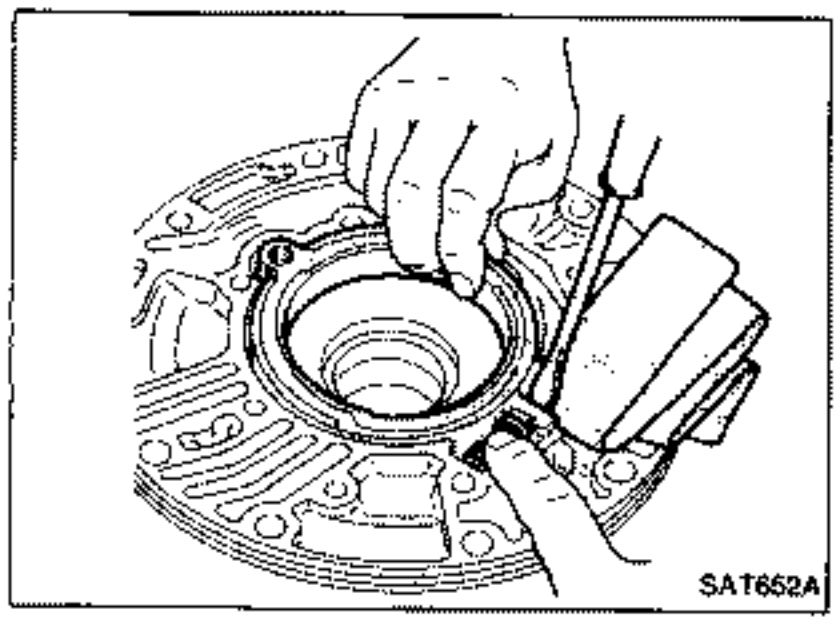

4. While holding cam ring and spring lift out cam ring spring.
- **Be careful not to damage oil pump housing.**
- **Hold cam ring spring to prevent it from jumping.**

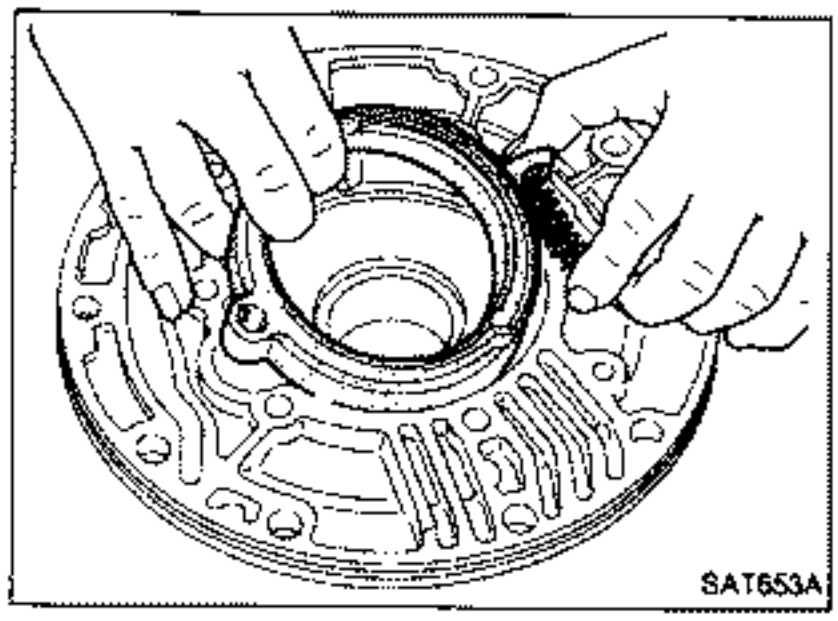

5. Remove cam ring and cam ring spring from oil pump housing.

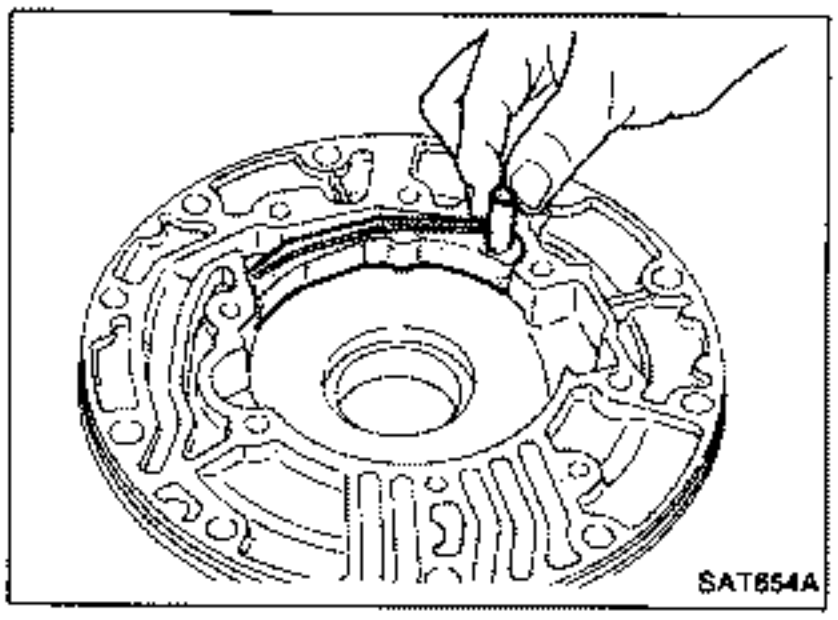

6. Remove pivot pin from control piston and remove control piston assembly.

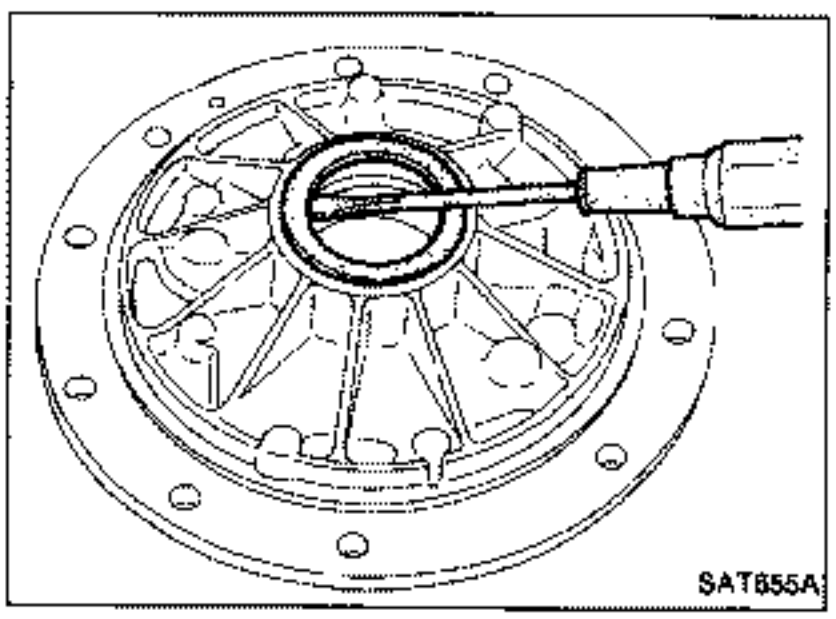

7. Remove oil seal from oil pump housing.
- **Be careful not to scratch oil pump housing.**

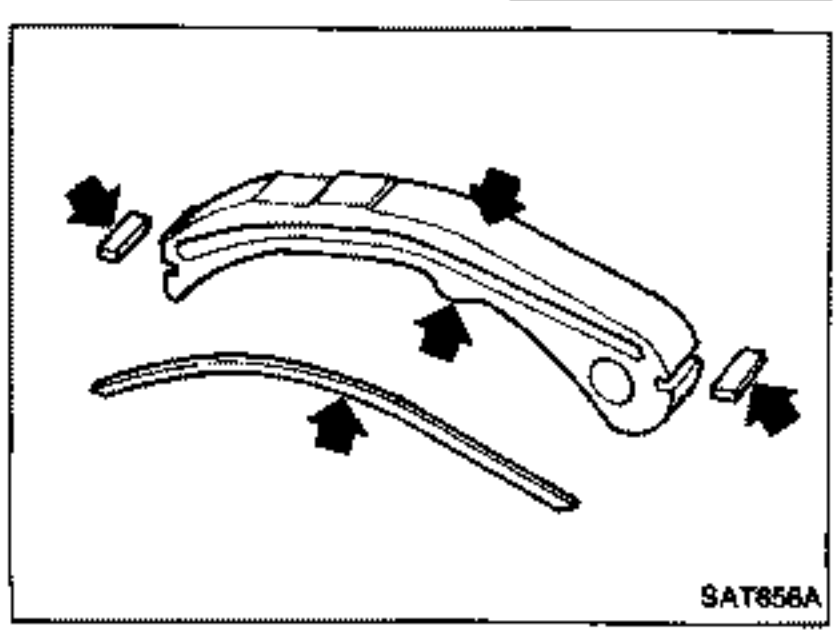

INSPECTION

Oil pump cover, rotor, vanes, control piston, side seals, cam ring and friction ring

- Check for wear or damage.

Z.ONE.DATSUN

Oil Pump (Cont'd)

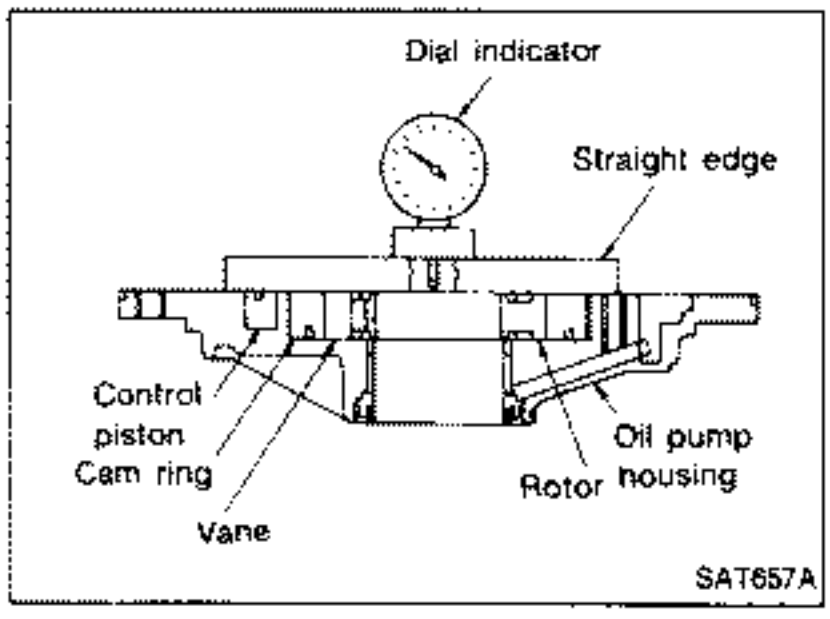

Side clearances

- Measure side clearances between end of oil pump housing and cam ring, rotor, vanes and control piston in at least four places along their circumferences. Maximum measured values should be within specified ranges.
- **Before measuring side clearance, check that friction rings, O-ring, control piston side seals and cam ring spring are removed.**

  Standard clearance:

  Cam ring

  0.01 - 0.024 mm (0.0004 - 0.0009 in)

  Rotor, vanes, control piston

  0.03 - 0.044 mm (0.0012 - 0.0017 in)
- If not within standard clearance, replace oil pump assembly except oil pump cover assembly.

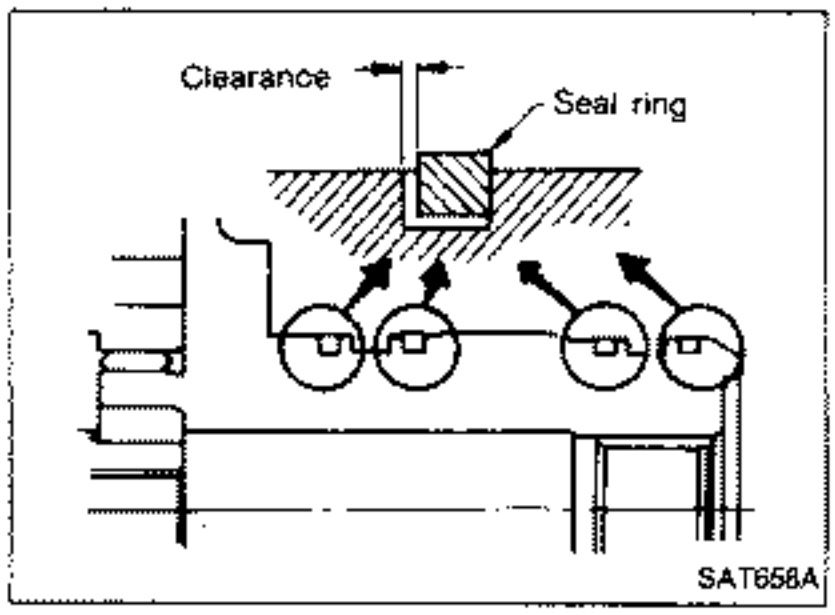

Seal ring clearance

- Measure clearance between seal ring and ring groove.

  Standard clearance:

  0.10 - 0.25 mm (0.0039 - 0.0098 in)

  Wear limit:

  0.25 mm (0.0098 in)
- If not within wear limit, replace oil pump cover assembly.

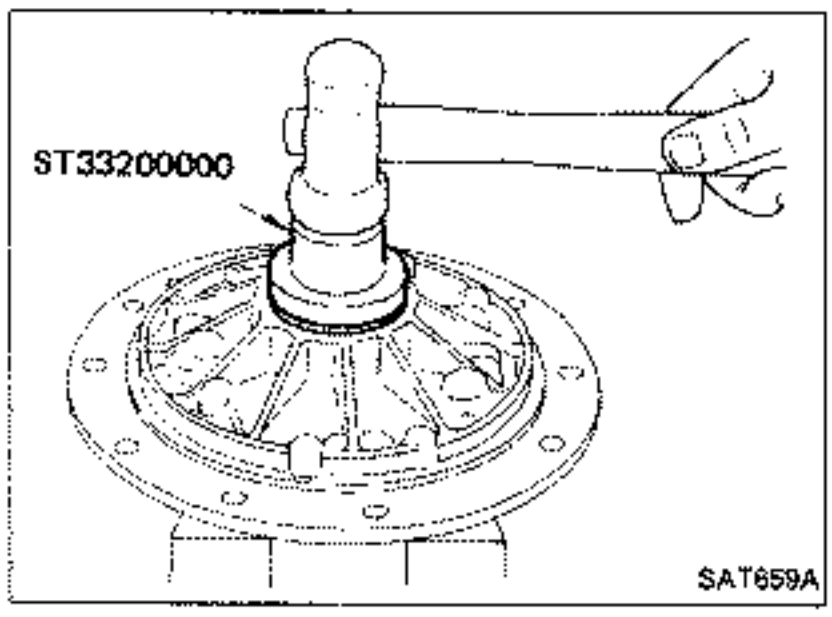

ASSEMBLY

1. Drive oil seal into oil pump housing.
- **Apply A.T.F. to outer periphery and lip surface.**

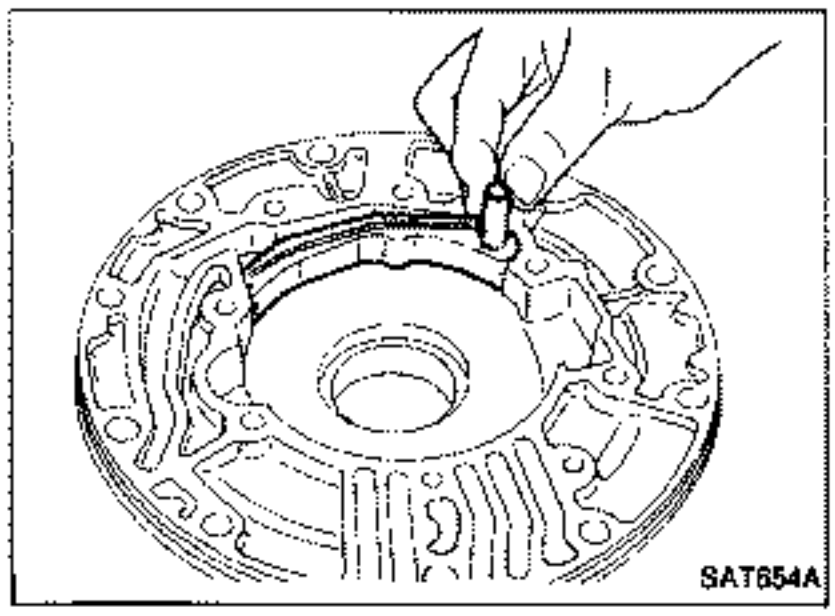

2. Install cam ring in oil pump housing by the following steps.

a. Install side seal on control piston.

- **Pay attention to its direction — Black surface goes toward control piston.**
- **Apply petroleum jelly to side seal.**

b. Install control piston on oil pump.

Oil Pump (Cont'd)

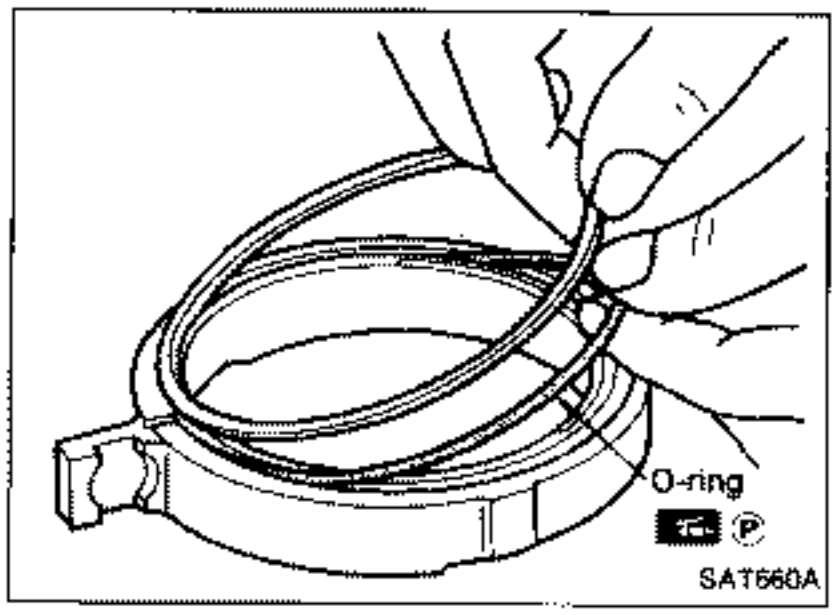

c. Install O-ring and friction ring on cam ring.

- **Apply petroleum jelly to O-ring.**

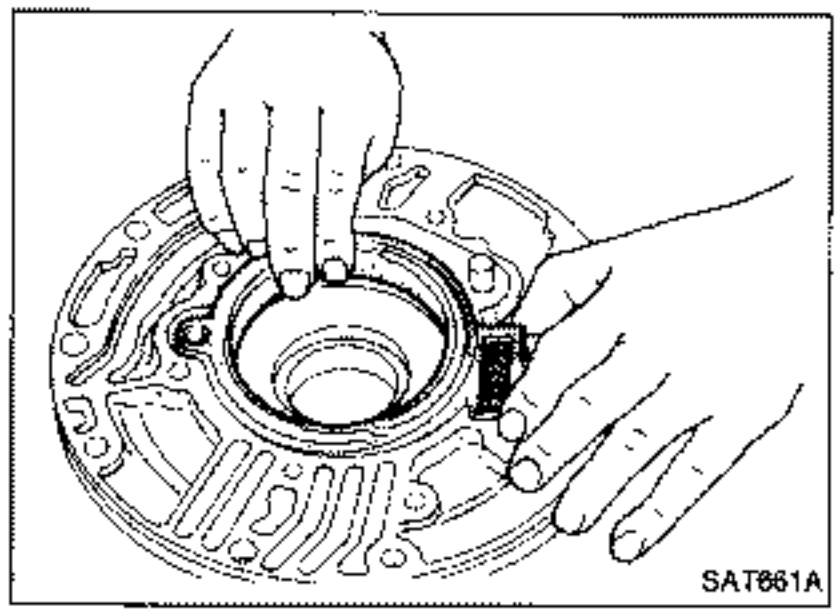

d. Assemble cam ring, cam ring spring and spring seat. Install spring by pushing it against pump housing.

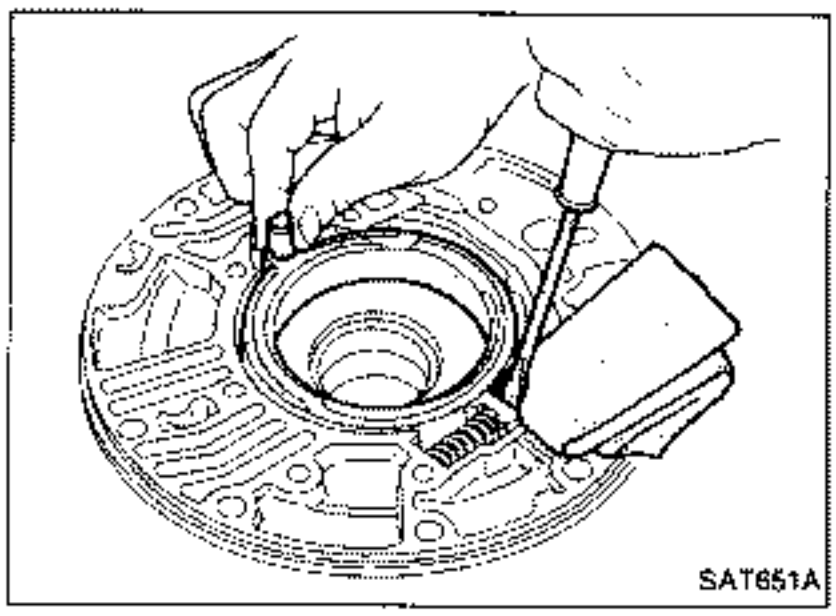

e. While pushing on cam ring install pivot pin.

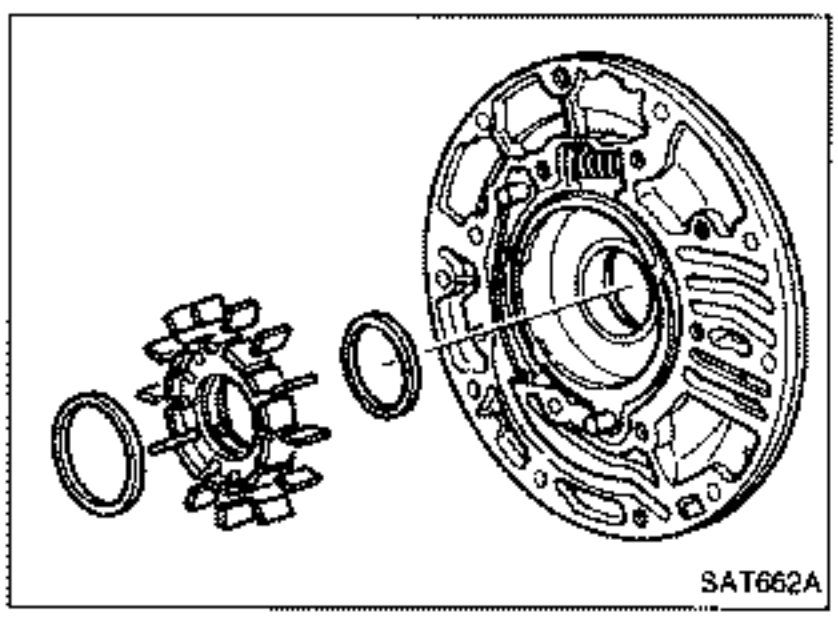

3. Install rotor, vanes and vane rings.

- **Pay attention to direction of rotor.**

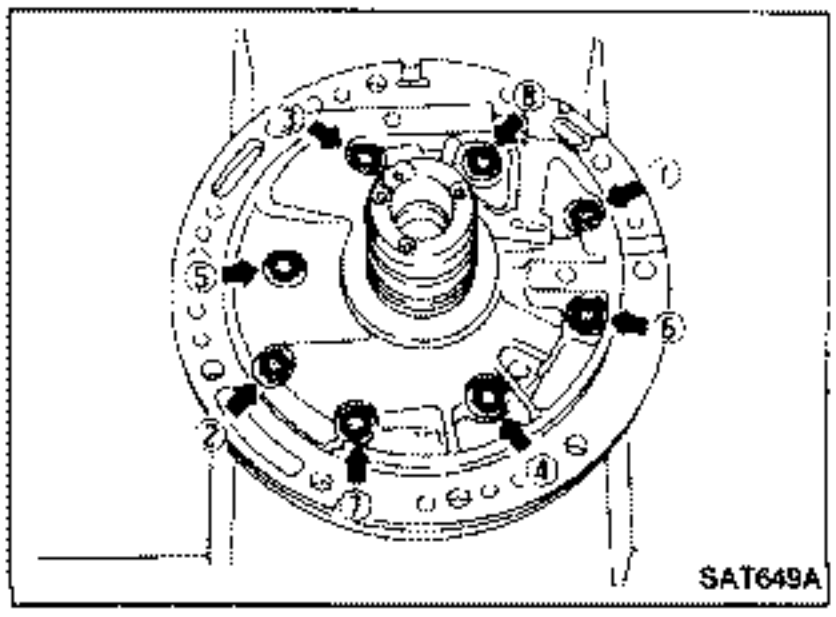

4. Install oil pump housing and oil pump cover.

a. Wrap masking tape around splines of oil pump cover assembly to protect seal. Position oil pump cover assembly in oil pump housing assembly, then remove masking tape.

b. Tighten bolts in a criss-cross pattern.

Oil Pump (Cont'd)

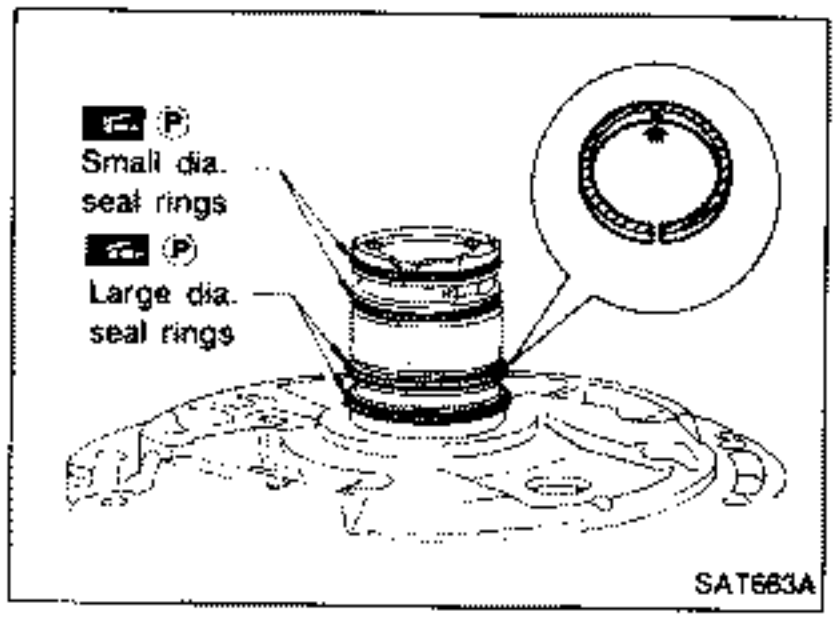

5. Install seal rings carefully after packing ring grooves with petroleum jelly. Press rings down into jelly to a close fit.

- **Seal rings come in two different diameters. Check fit carefully in each groove.**
  Small dia. seal ring:
  No mark
  Large dia. seal ring:
  Yellow mark in area shown by arrow
- **Do not spread gap of seal ring excessively while installing. It may deform ring.**

Control Valve Assembly

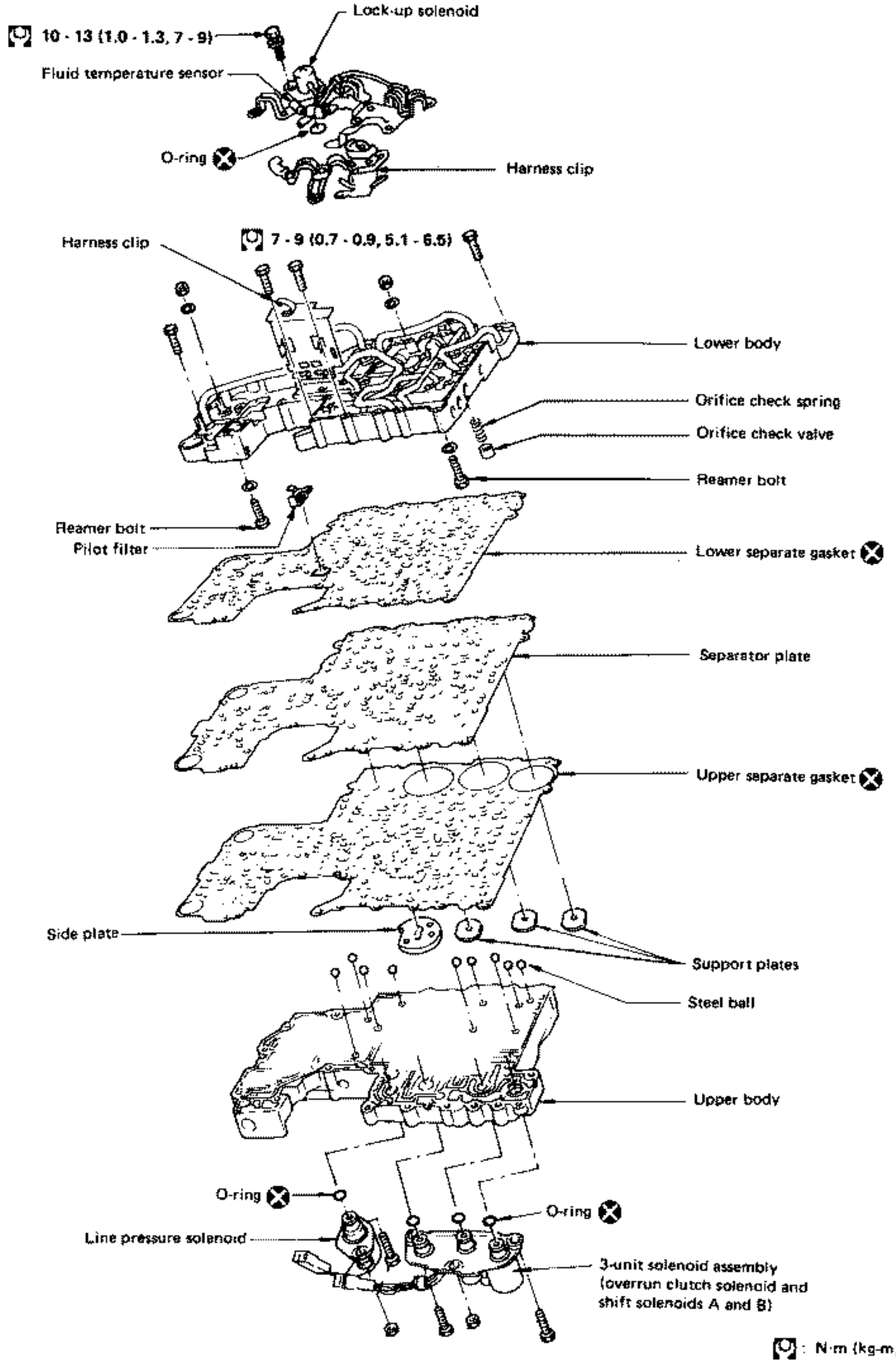

: N·m (kg-m, ft-lb)

SAT638C

Control Valve Assembly (Cont'd)

DISASSEMBLY

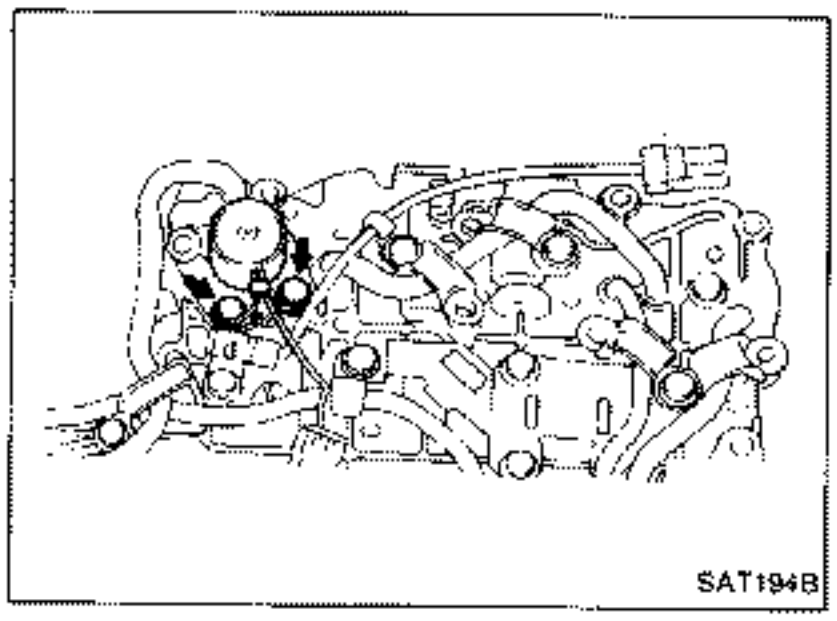
SAT194B

1. Remove solenoids.
a. Remove lock-up solenoid and side plate from lower body.
b. Remove O-ring from solenoid.

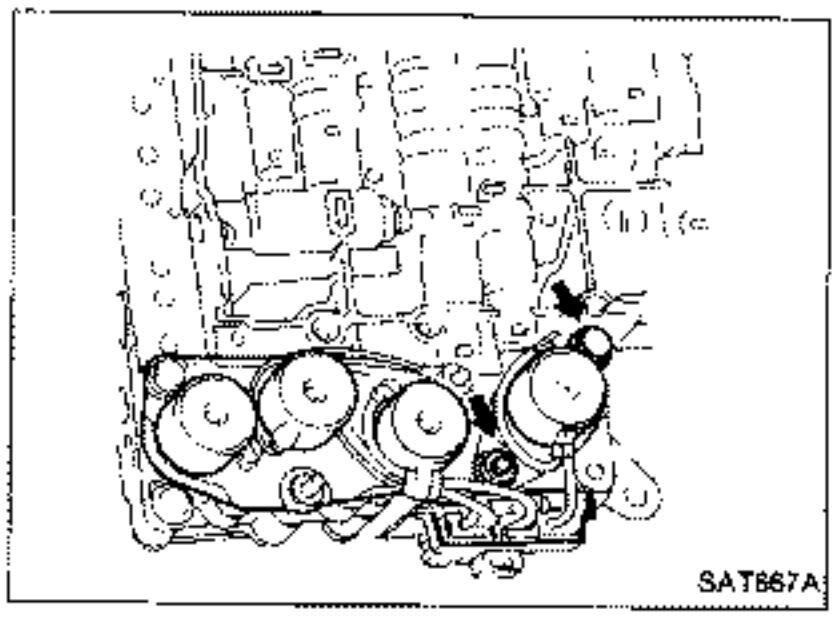
SAT667A

c. Remove line pressure solenoid from upper body.
d. Remove O-ring from solenoid.

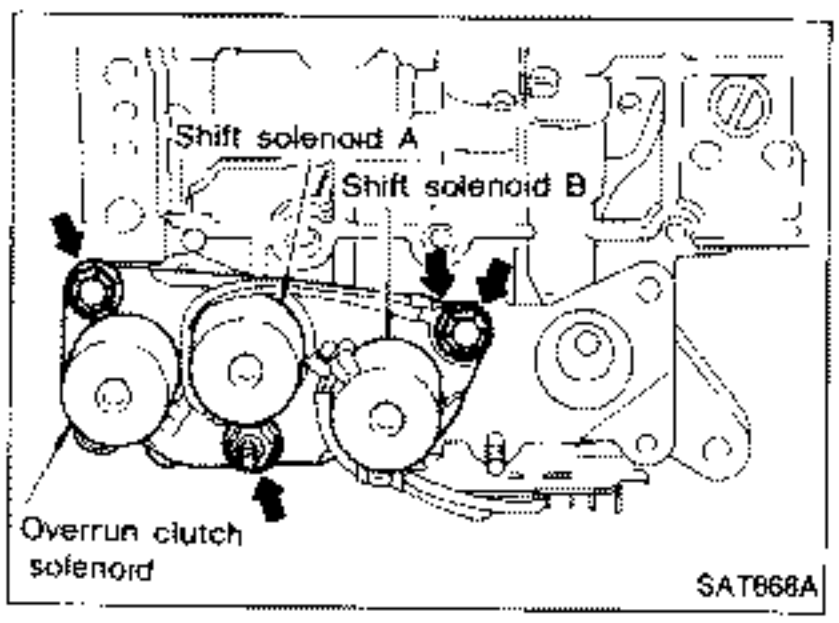

SAT668A

e. Remove 3-unit solenoid assembly from upper body.
f. Remove O-rings from solenoids.

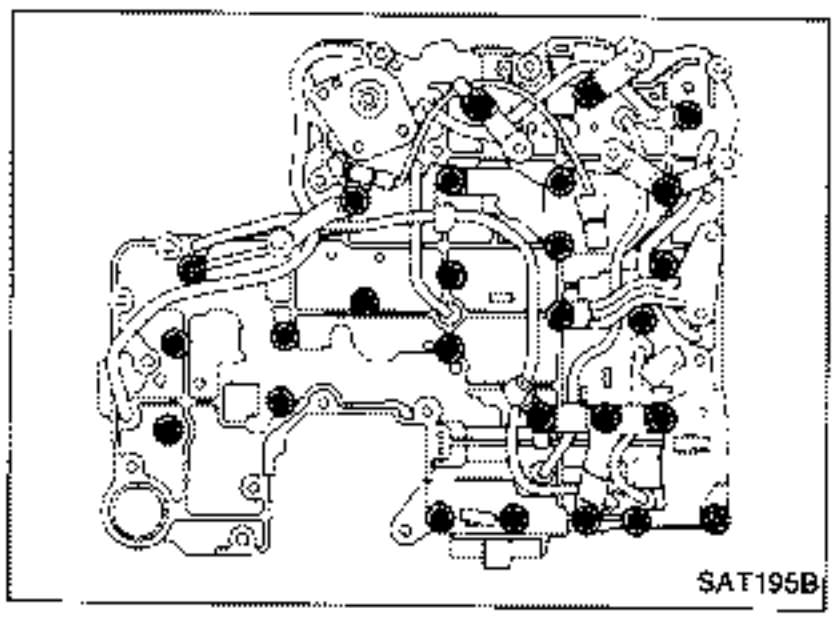
SAT195B

2. Disassemble upper and lower bodies.
a. Place upper body facedown, and remove bolts, reamer bolts and support plates.
b. Remove lower body, separator plate and separate gasket as a unit from upper body.

- **Be careful not to drop pilot filter, orifice check valve, spring and steel balls.**

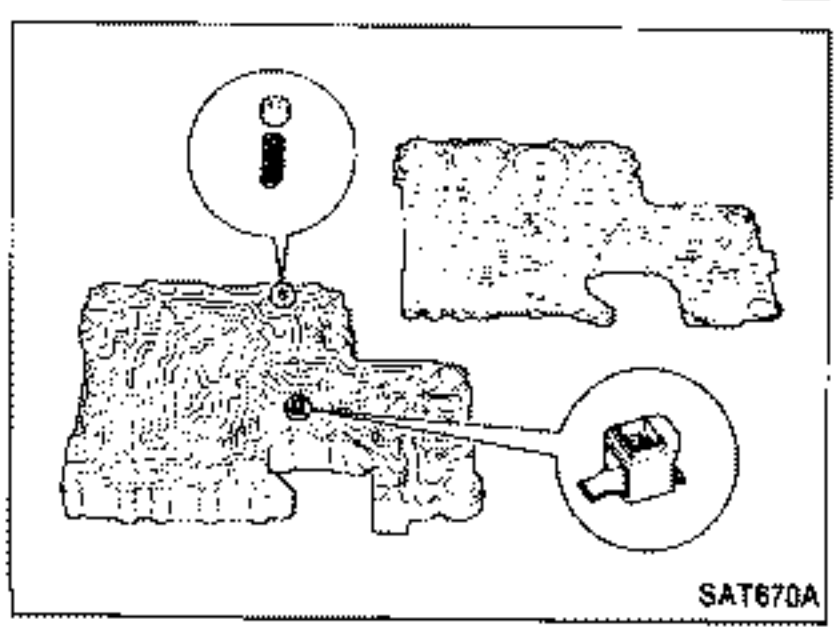
SAT670A

c. Place lower body facedown, and remove separate gasket and separator plate.
d. Remove pilot filter, orifice check valve and orifice check spring.

Control Valve Assembly (Cont'd)

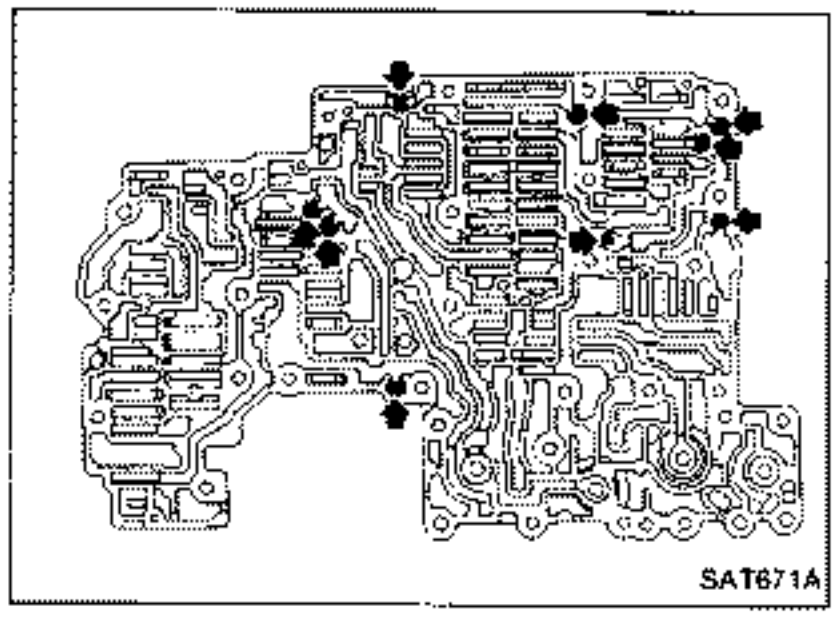
SAT671A

e. Check to see that steel balls are properly positioned in upper body and then remove them from upper body.

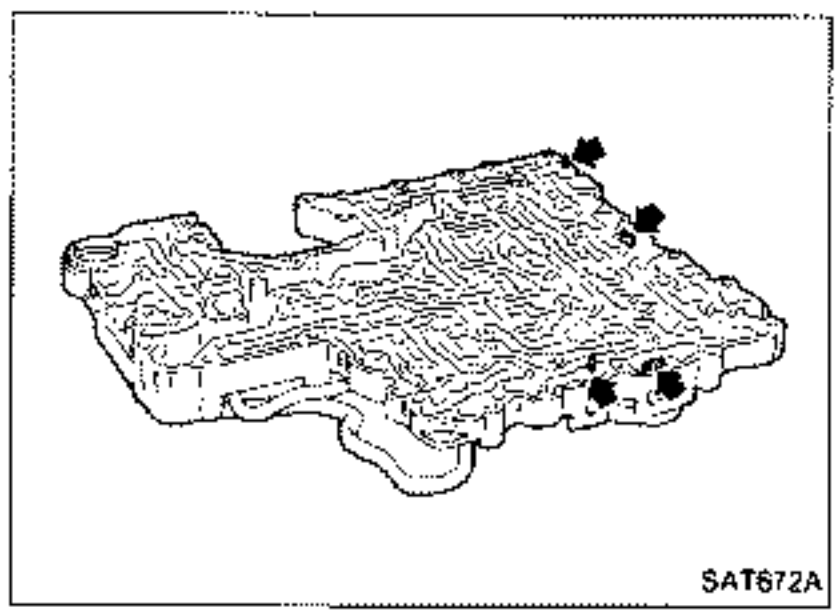
SAT672A

INSPECTION

Lower and upper bodies

- Check to see that there are pins and retainer plates in lower body.

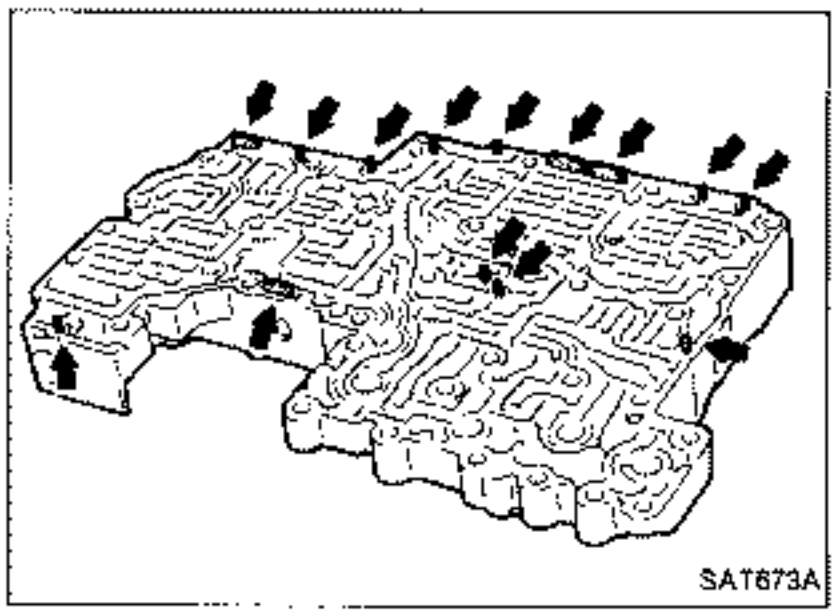
SAT673A

- Check to see that there are pins and retainer plates in upper body.
- **Be careful not to lose these parts.**

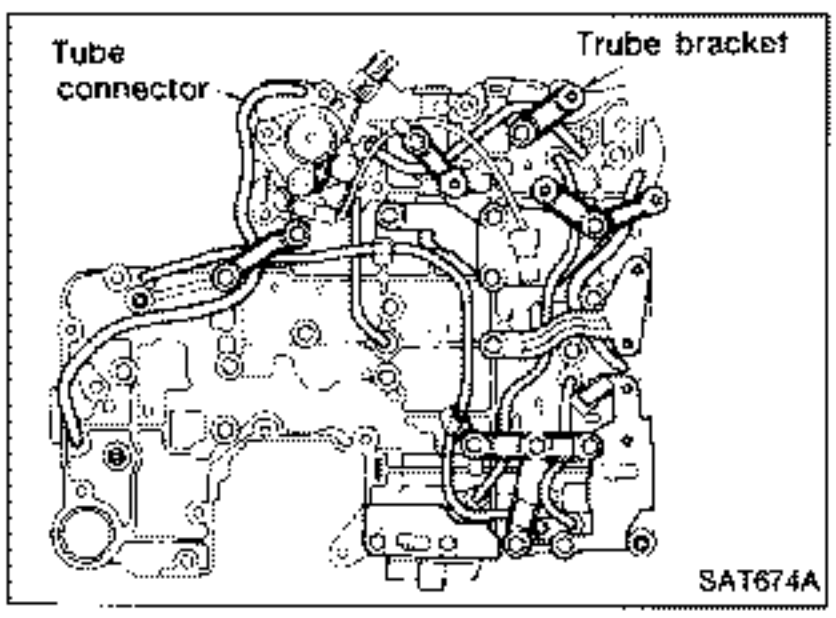

SAT674A

- Check to make sure that oil circuits are clean and free from damage.
- Check tube brackets and tube connectors for damage.

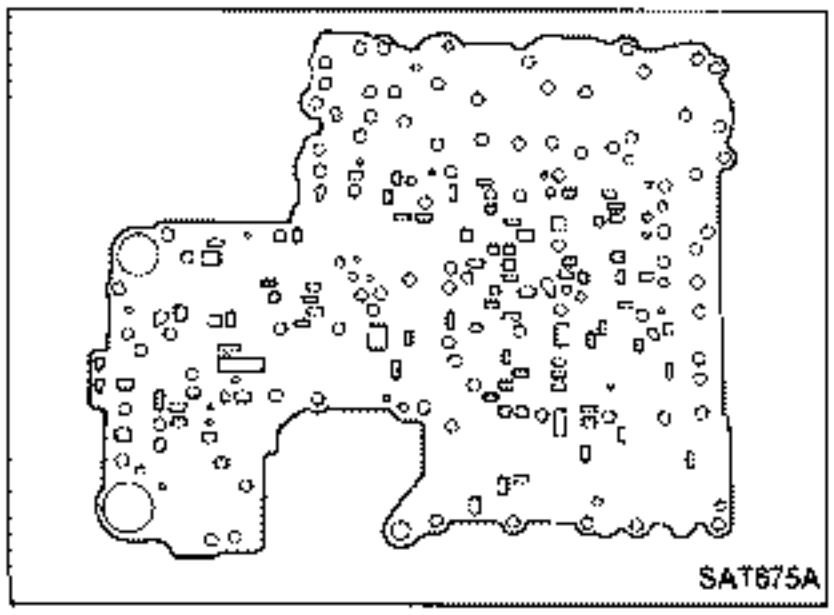
SAT675A

Separator plates

- Check to make sure that separator plate is free of damage and not deformed and oil holes are clean.

Control Valve Assembly (Cont'd)

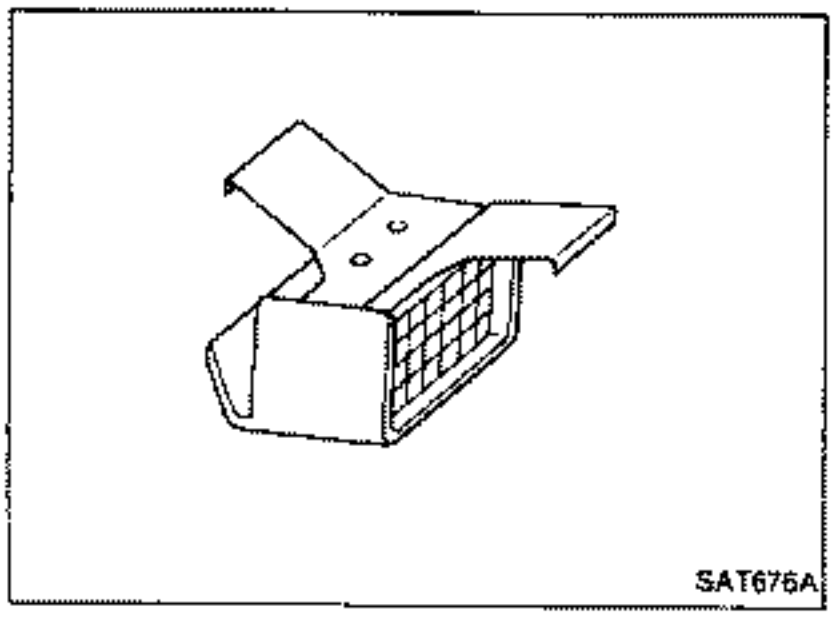

Pilot filter

- Check to make sure that filter is not clogged or damaged.

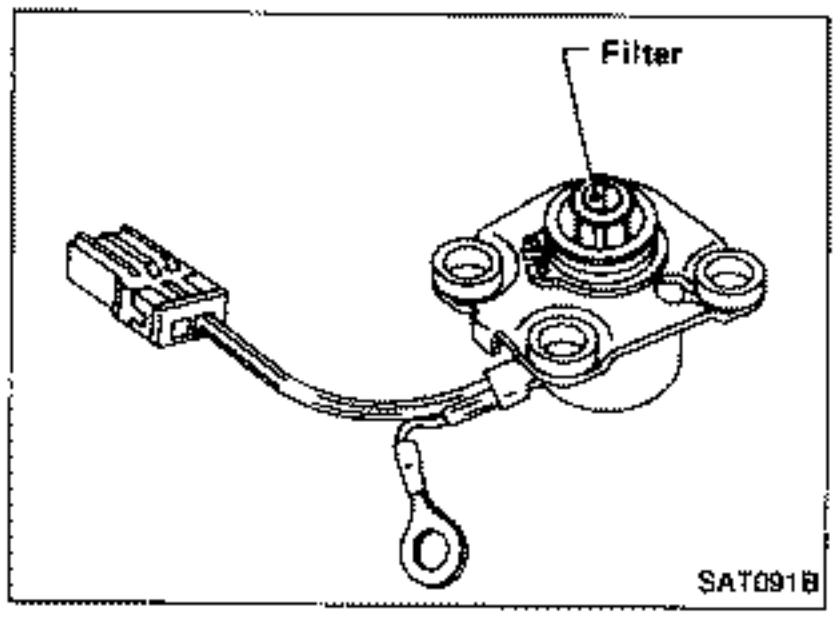

Lock-up solenoid

- Check that filter is not clogged or damaged.
- Measure resistance. — Refer to "Electrical Components Inspection".

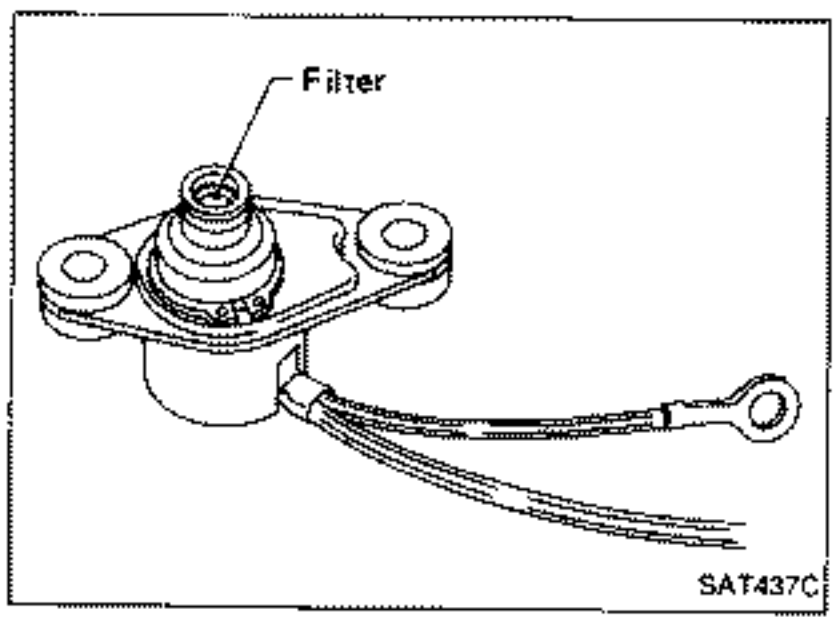

Line pressure solenoid

- Check that filter is not clogged or damaged.
- Measure resistance. — Refer to "Electrical Components Inspection".

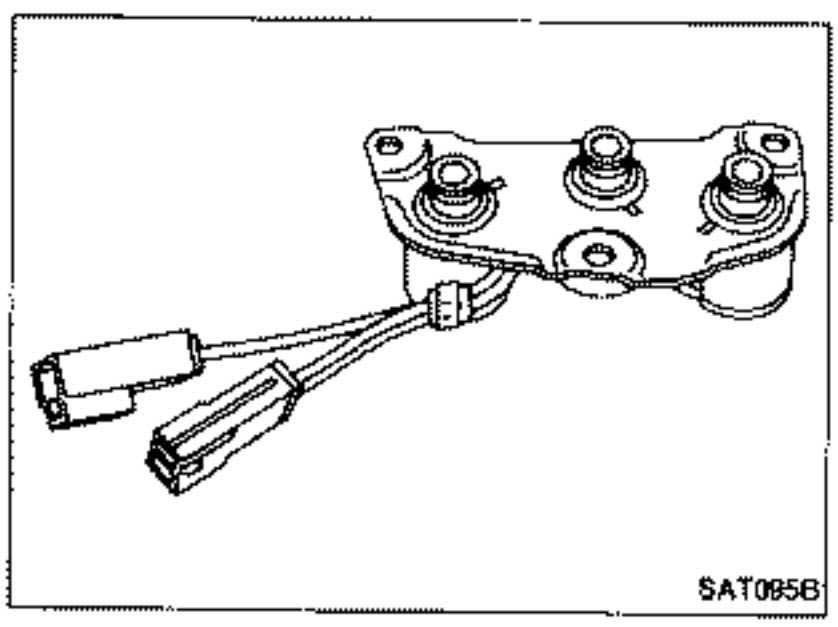

3-unit solenoid assembly (Overrun clutch solenoid and shift solenoids A and B)

- Measure resistance of each solenoid. — Refer to "Electrical Components Inspection".

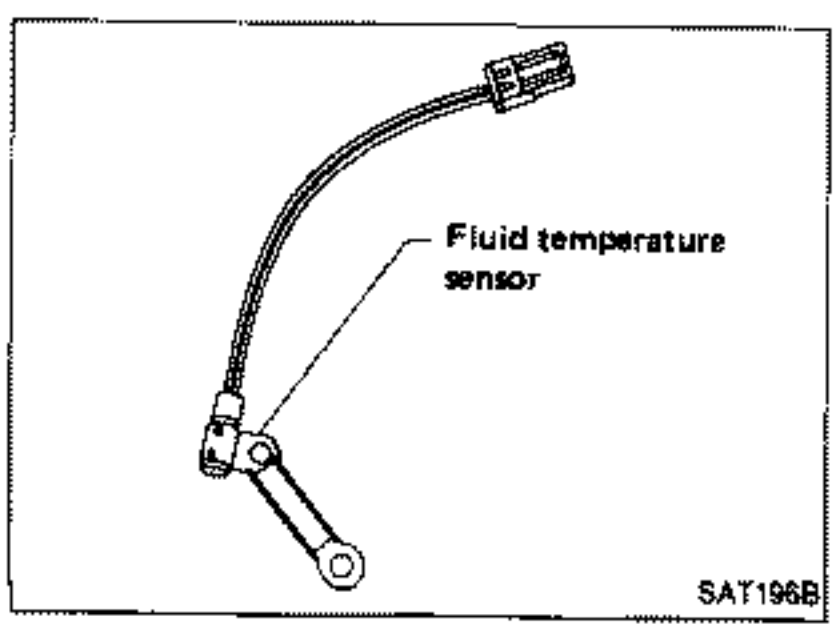

Fluid temperature sensor

- Measure resistance. — Refer to "Electrical Components Inspection".

Control Valve Assembly (Cont'd)

ASSEMBLY

1. Install upper and lower bodies.

a. Place oil circuit of upper body face up. Install steel balls in their proper positions.

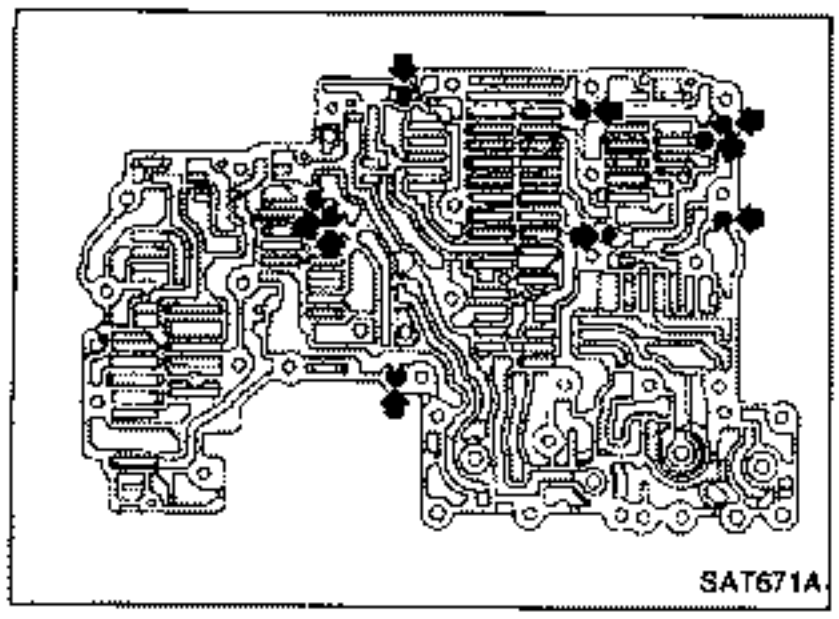

b. Install reamer bolts from bottom of upper body and install separate gaskets.

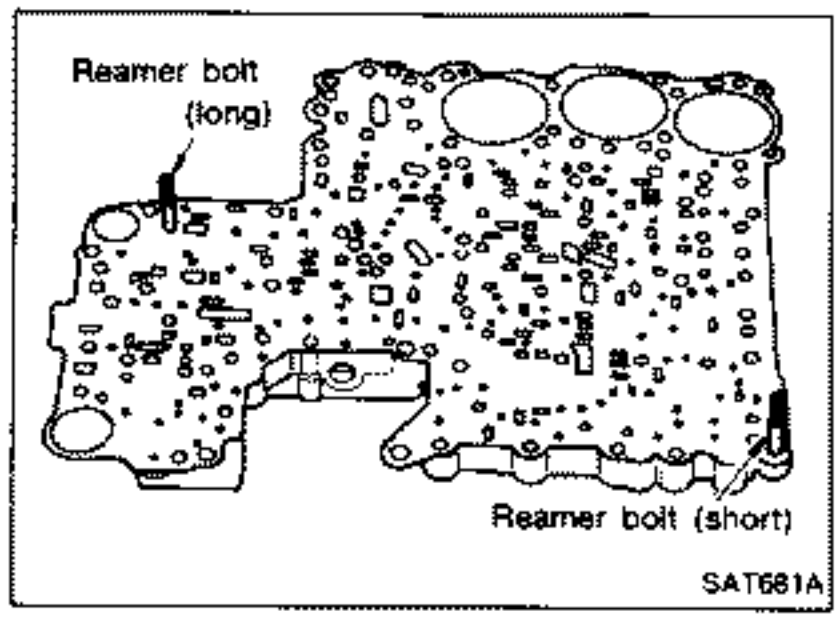

c. Place oil circuit of lower body face up. Install orifice check spring, orifice check valve and pilot filter.

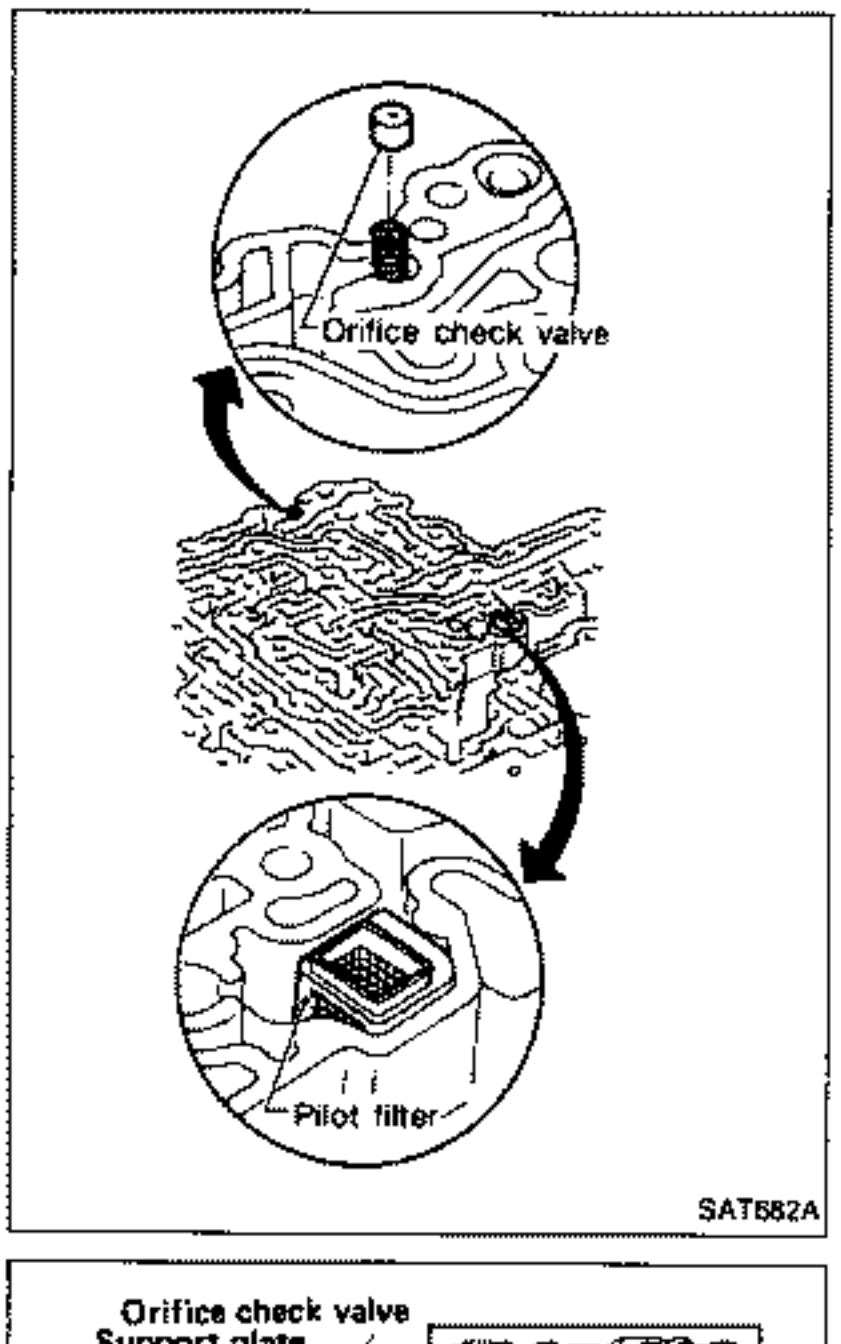

d. Install lower separate gaskets and separator plates on lower body.

e. Install and temporarily tighten support plates, fluid temperature sensor and tube brackets.

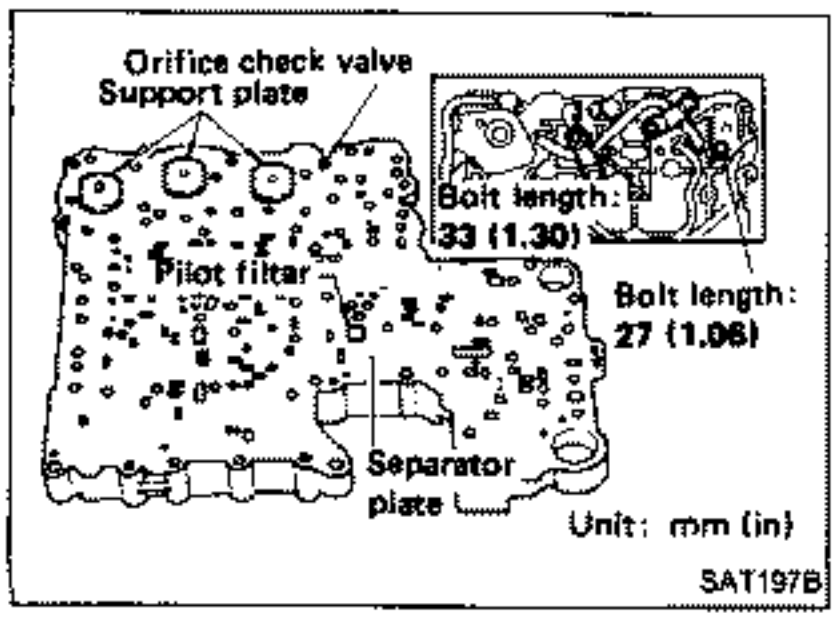

Control Valve Assembly (Cont'd)

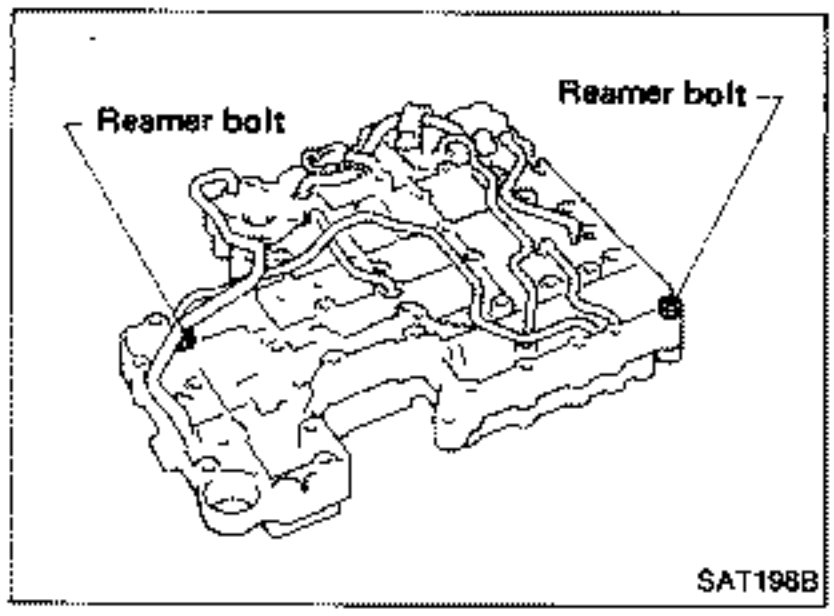

f. Temporarily assemble lower and upper bodies, using reamer bolt as a guide.

- **Be careful not to dislocate or drop steel balls, orifice check spring, orifice check valve and pilot filter.**

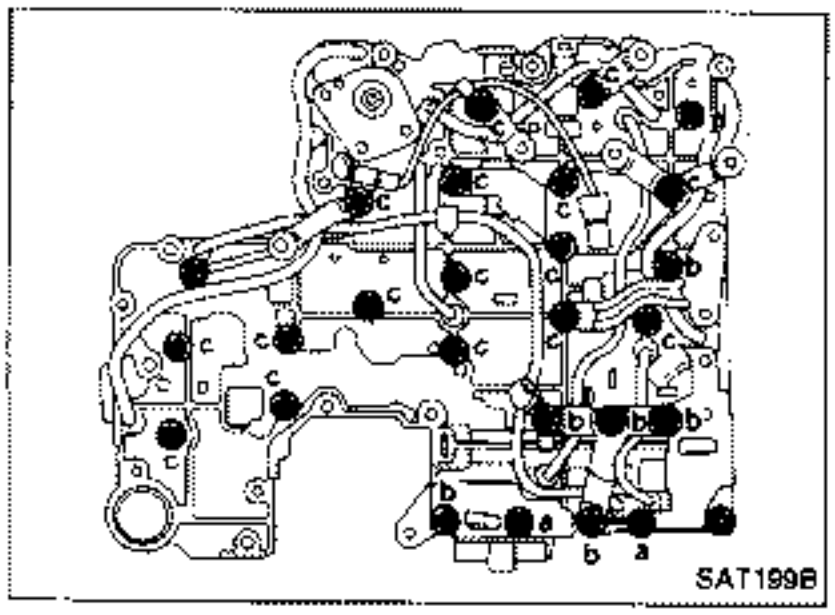

g. Install and temporarily tighten bolts and tube brackets in their proper locations.

Bolt length and location:

Item \ Bolt symbol		a	b	c	d
Bolt length	mm (in)	70 (2.76)	50 (1.97)	33 (1.30)	27 (1.06)

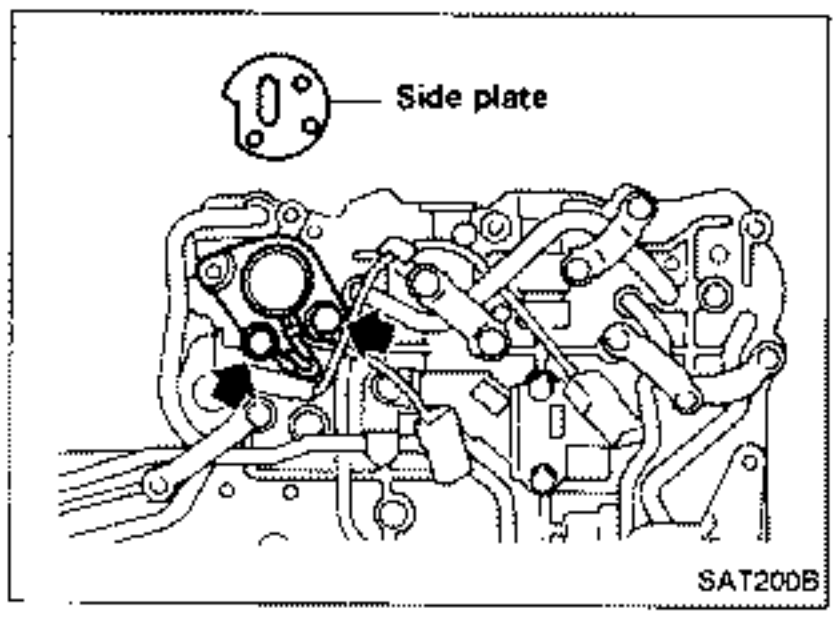

2. Install solenoids.

a. Attach O-ring and install lock-up solenoid and side plates onto lower body.

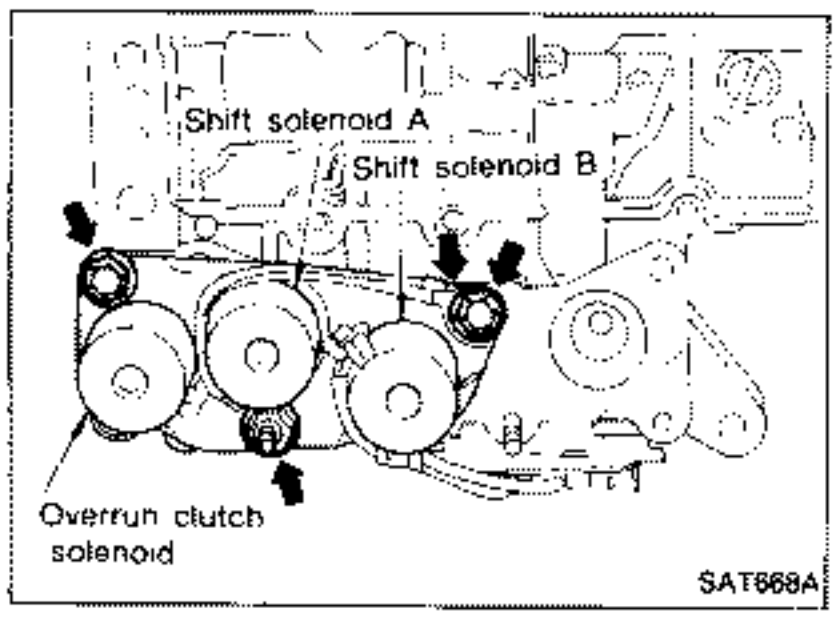

b. Attach O-rings and install 3-unit solenoids assembly onto upper body.

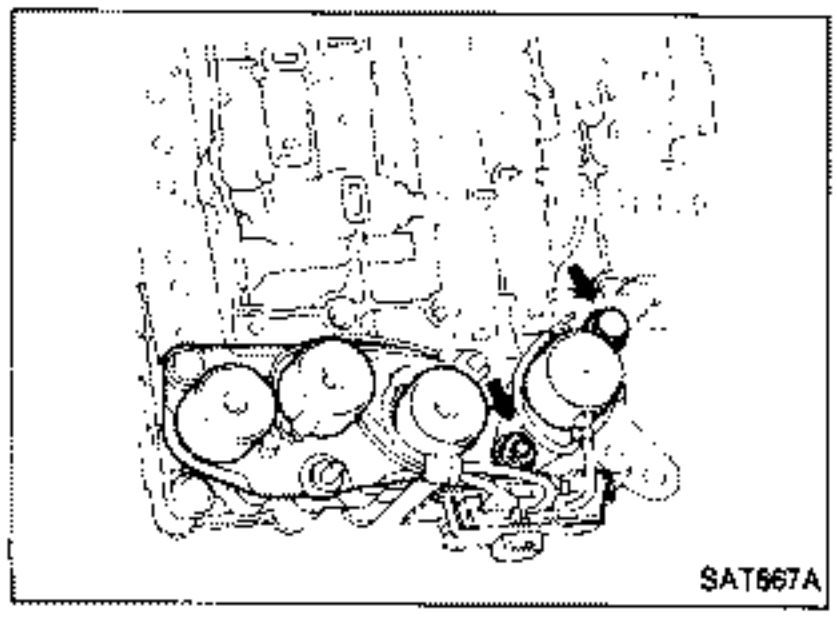

c. Attach O-ring and install line pressure solenoid onto upper body.

3. Tighten all bolts.

Control Valve Upper Body

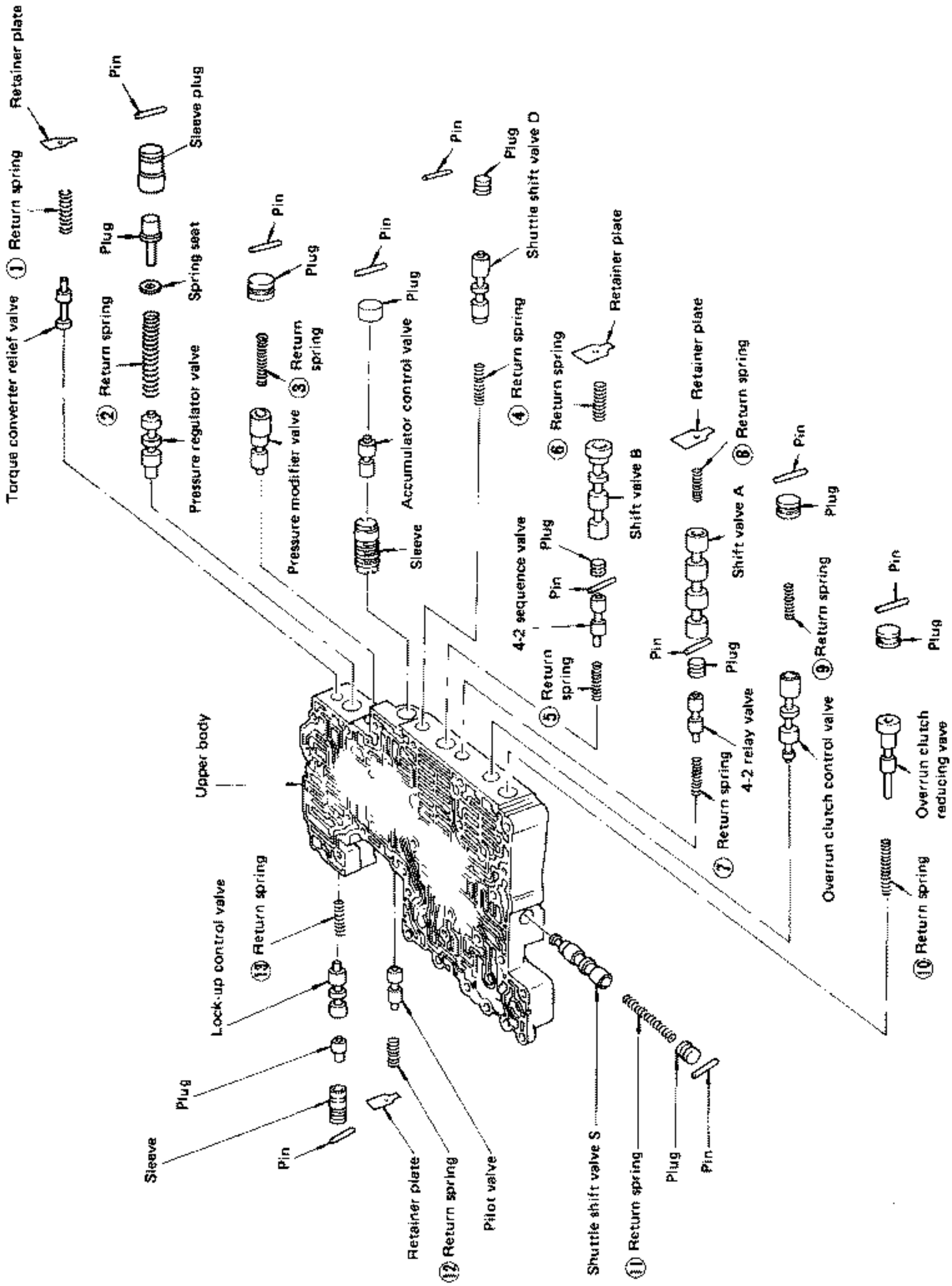

Numbers preceding valve springs correspond with those shown in Spring Chart on page AT-132.

Apply A.T.F. to all components before their installation.

5AT639C

Control Valve Upper Body (Cont'd)

DISASSEMBLY

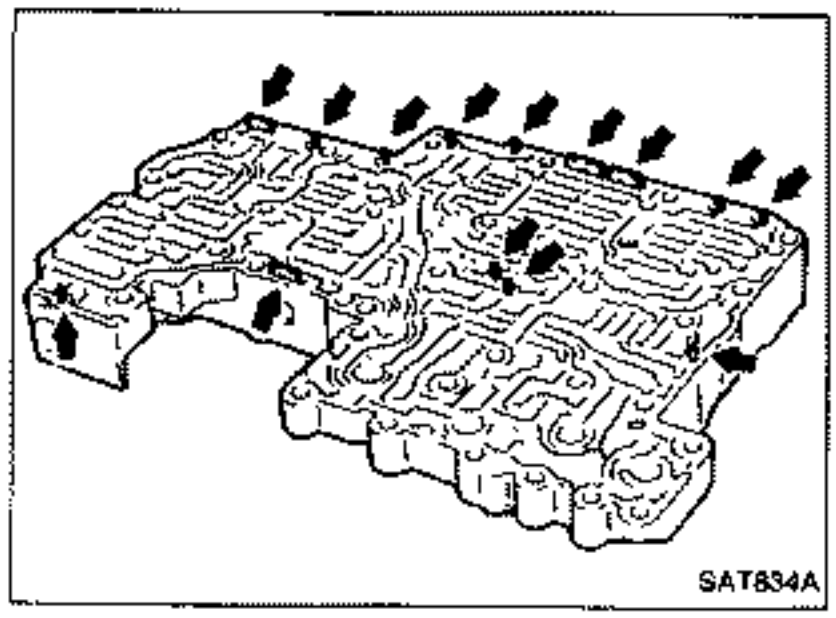

1. Remove valves at parallel pins.

- **Do not use a magnetic hand.**

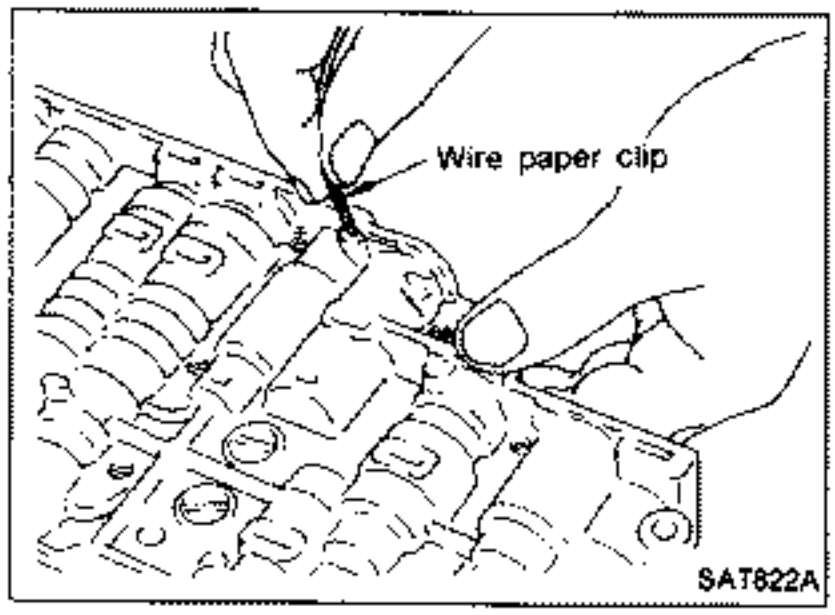

a. Use a wire paper clip to push out parallel pins.

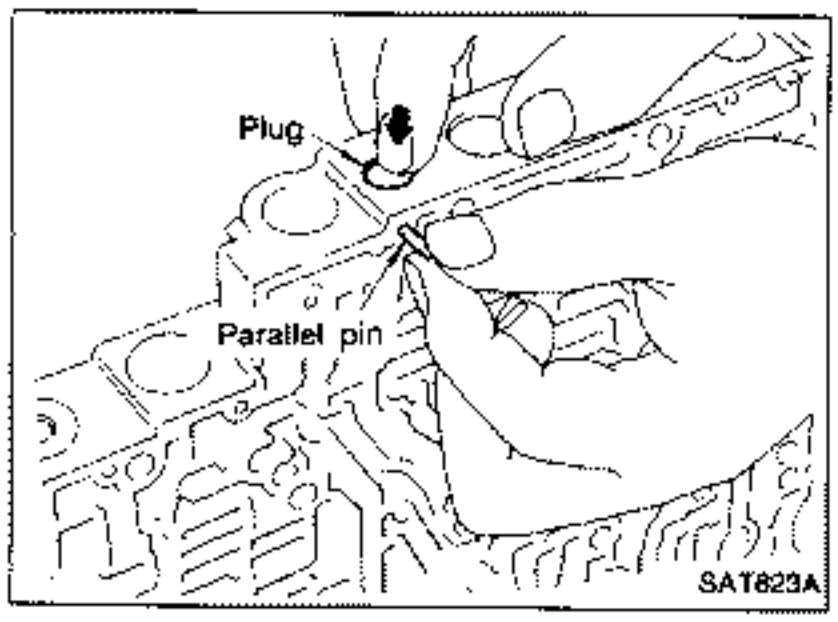

b. Remove parallel pins while pressing their corresponding plugs and sleeves.

- **Remove plug slowly to prevent internal parts from jumping out.**

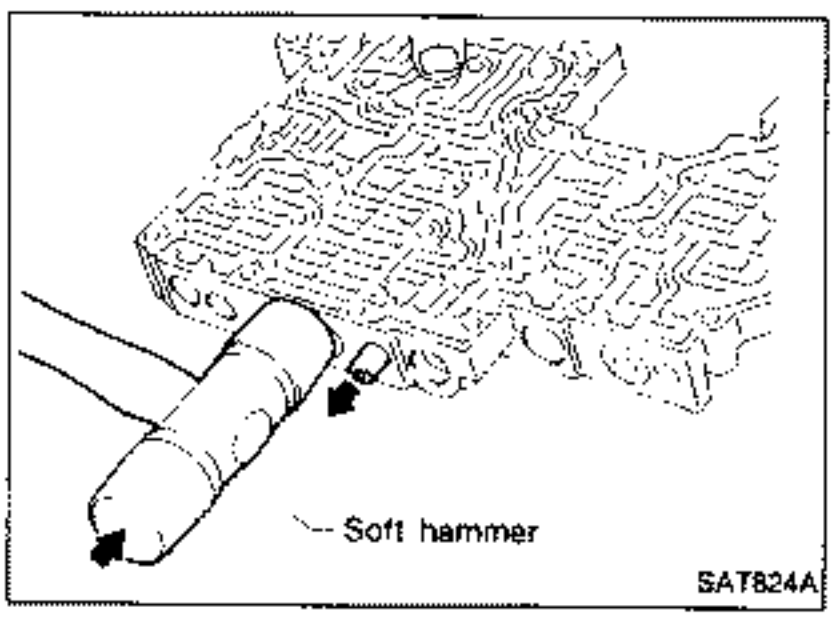

c. Place mating surface of valve facedown, and remove internal parts.

- **If a valve is hard to remove, place valve body facedown and lightly tap it with a soft hammer.**
- **Be careful not to drop or damage valves and sleeves.**

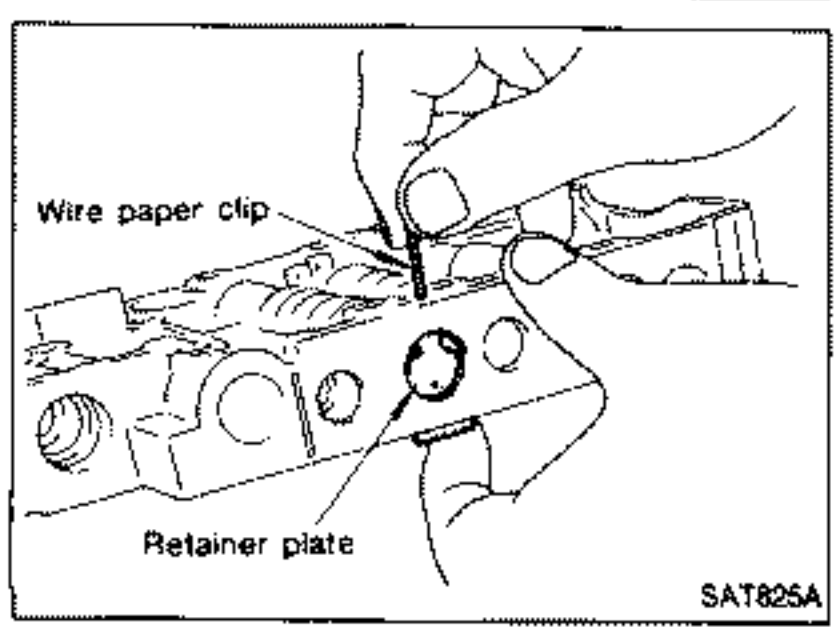

2. Remove valves at retainer plates.

a. Pry out retainer plate with wire paper clip.

Control Valve Upper Body (Cont'd)

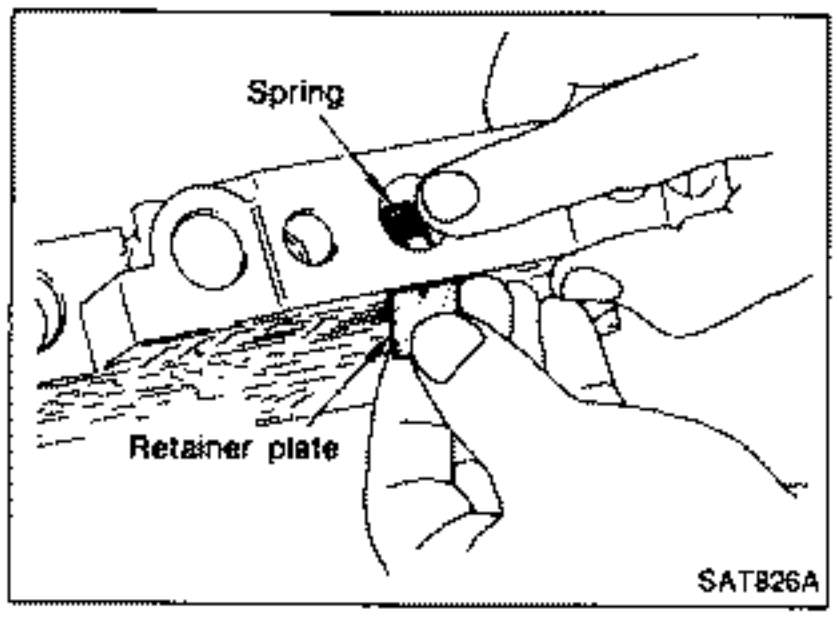

b. Remove retainer plates while holding spring.

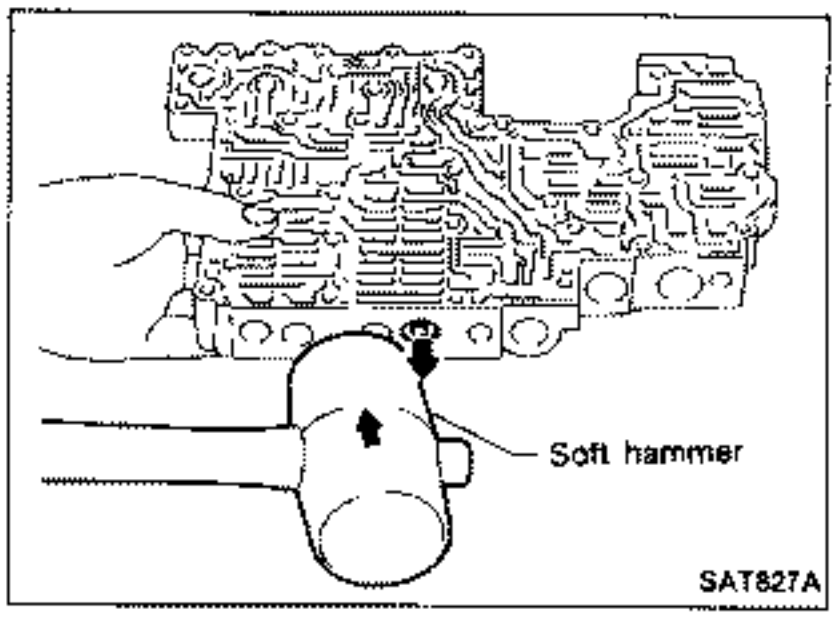

c. Place mating surface of valve facedown, and remove internal parts.

- **If a valve is hard to remove, lightly tap valve body with a soft hammer.**
- **Be careful not to drop or damage valves, sleeves, etc.**

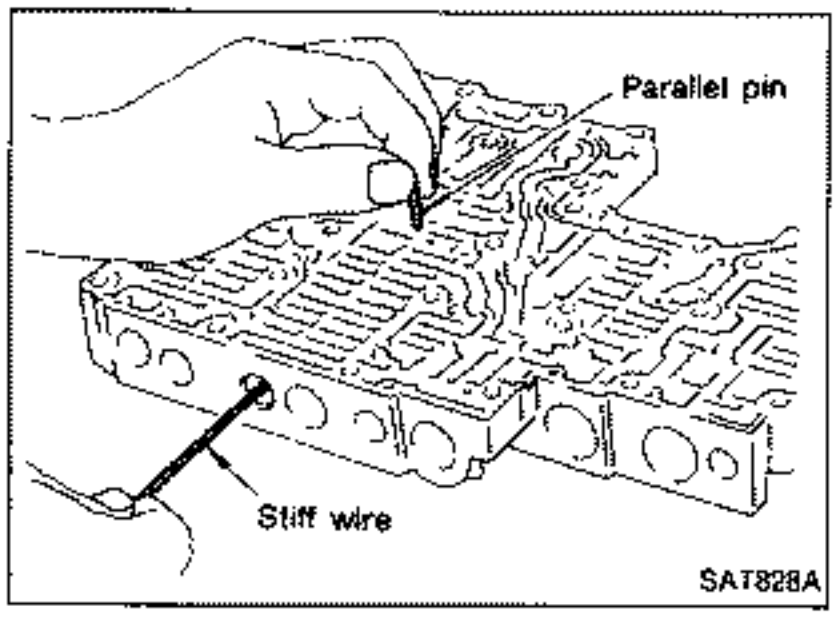

- 4-2 sequence valve and relay valve are located far back in upper body. If they are hard to remove, carefully push them out using stiff wire.
- **Be careful not to scratch sliding surface of valve with wire.**

Control Valve Upper Body (Cont'd)

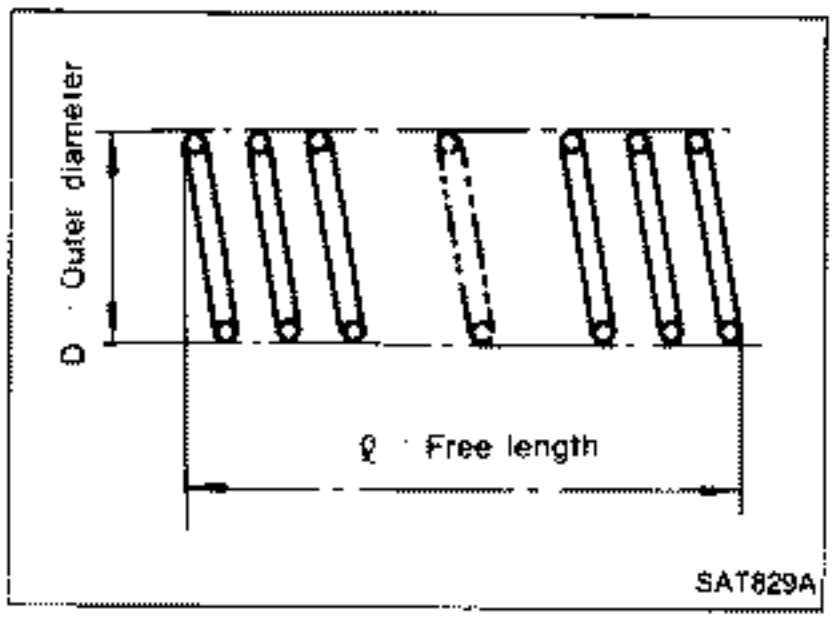

INSPECTION

Valve springs

- Measure free length and outer diameter of each valve spring. Also check for damage or deformation.
- Numbers of each valve spring listed in table below are the same as those in the figure on AT-129.

Inspection standard

Unit: mm (in)

Parts \ Item		Part No.	ℓ	D
①	Torque converter relief valve spring	31742-41X23	38.0 (1.496)	9.0 (0.354)
②	Pressure regulator valve spring	31742-41X24	44.02 (1.7331)	14.0 (0.551)
③	Pressure modifier valve spring	31742-41X19	31.95 (1.2579)	6.8 (0.268)
④	Shuttle shift valve D spring	31762-41X00	26.5 (1.043)	6.0 (0.236)
⑤	4-2 sequence valve spring	31756-41X00	29.1 (1.146)	6.95 (0.2736)
⑥	Shift valve B spring	31762-41X01	25.0 (0.984)	7.0 (0.276)
⑦	4-2 relay valve spring	31756-41X00	29.1 (1.146)	6.95 (0.2736)
⑧	Shift valve A spring	31762-41X01	25.0 (0.984)	7.0 (0.276)
⑨	Overrun clutch control valve spring	31762-41X03	23.6 (0.929)	7.0 (0.276)
⑩	Overrun clutch reducing valve spring	31742-41x20	32.5 (1.280)	7.0 (0.276)
⑪	Shuttle shift valve S spring	31762-41X04	51.0 (2.008)	5.65 (0.2224)
⑫	Pilot valve spring	31742-41X13	25.7 (1.012)	9.1 (0.358)
⑬	Lock-up control valve spring	31742-41X22	18.5 (0.728)	13.0 (0.512)

- Replace valve springs if deformed or fatigued.

Control valves

- Check sliding surfaces of valves, sleeves and plugs.

Control Valve Upper Body (Cont'd)

ASSEMBLY

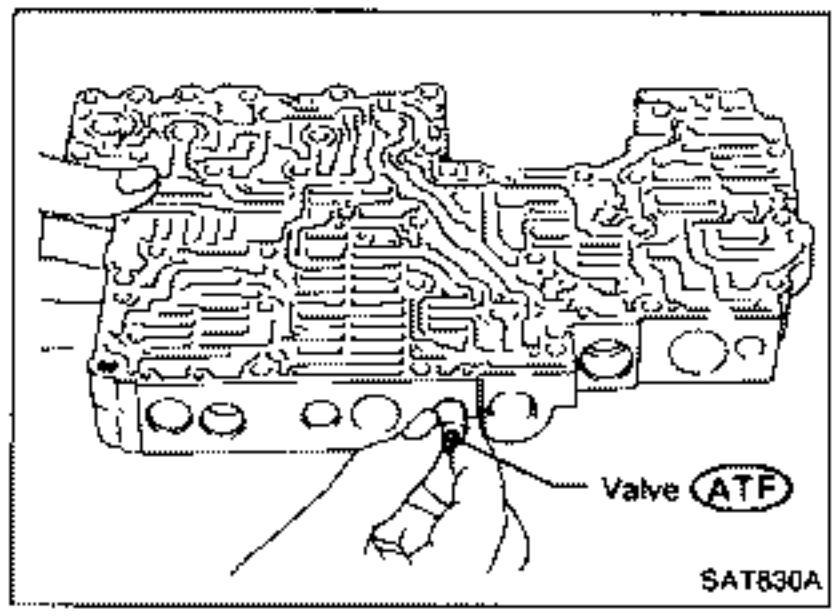

1. Lubricate the control valve body and all valves with A.T.F. Install control valves by sliding them carefully into their bores.

- **Be careful not to scratch or damage valve body.**

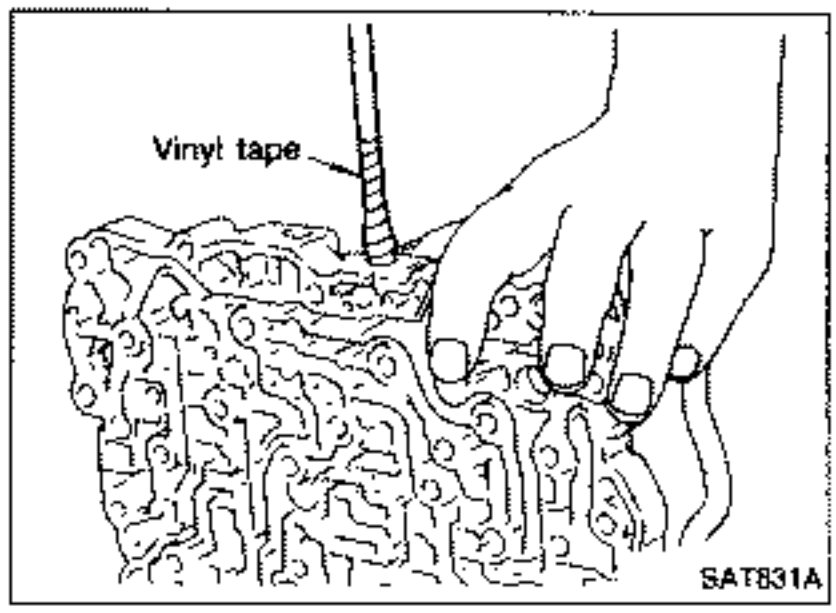

- Wrap a small screwdriver with vinyl tape and use it to insert the valves into proper position.

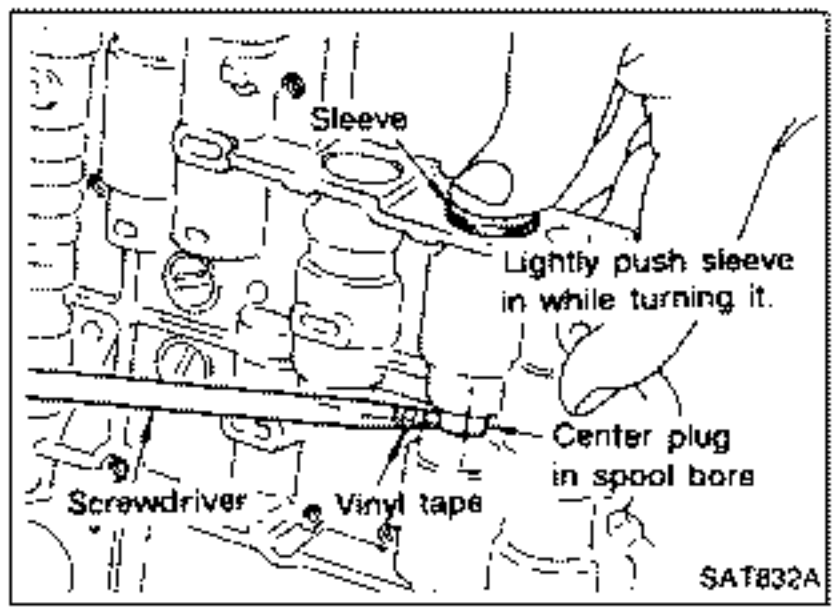

Pressure regulator valve

- If pressure regulator plug is not centered properly, sleeve cannot be inserted into bore in upper body.
  If this happens, use vinyl tape wrapped screwdriver to center sleeve until it can be inserted.
- Turn sleeve slightly while installing.

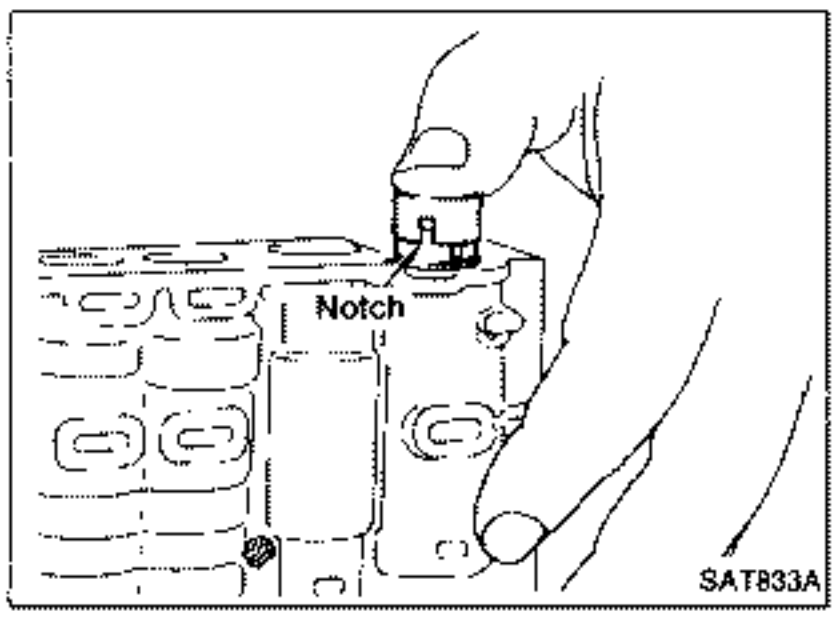

Accumulator control plug

- Align protrusion of accumulator control sleeve with notch in plug.
- Align parallel pin groove in plug with parallel pin, and install accumulator control valve.

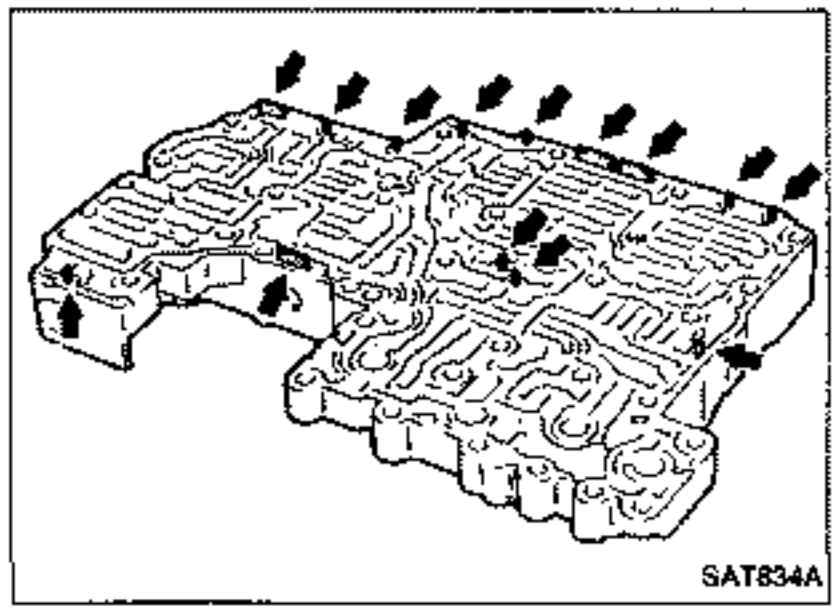

2. Install parallel pins and retainer plates.

Control Valve Upper Body (Cont'd)

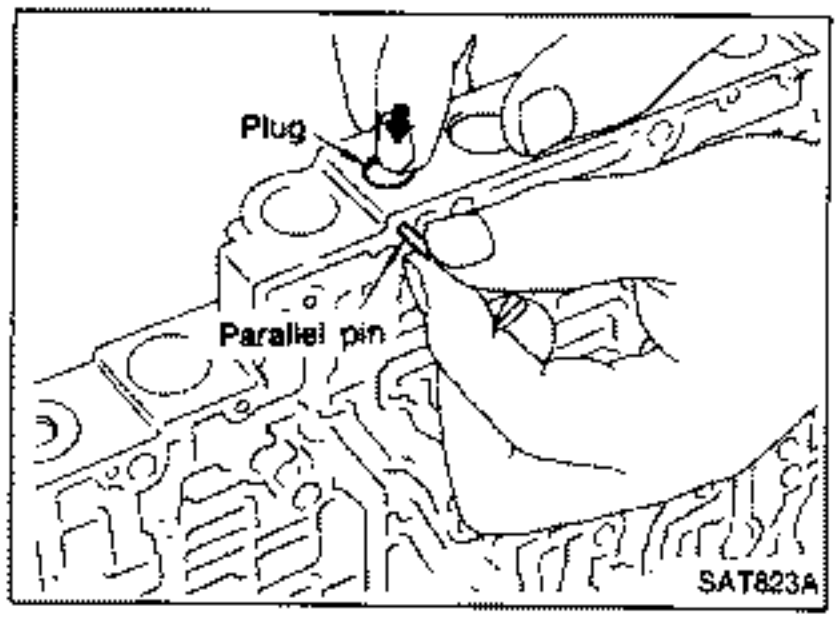

- While pushing plug, install parallel pin.

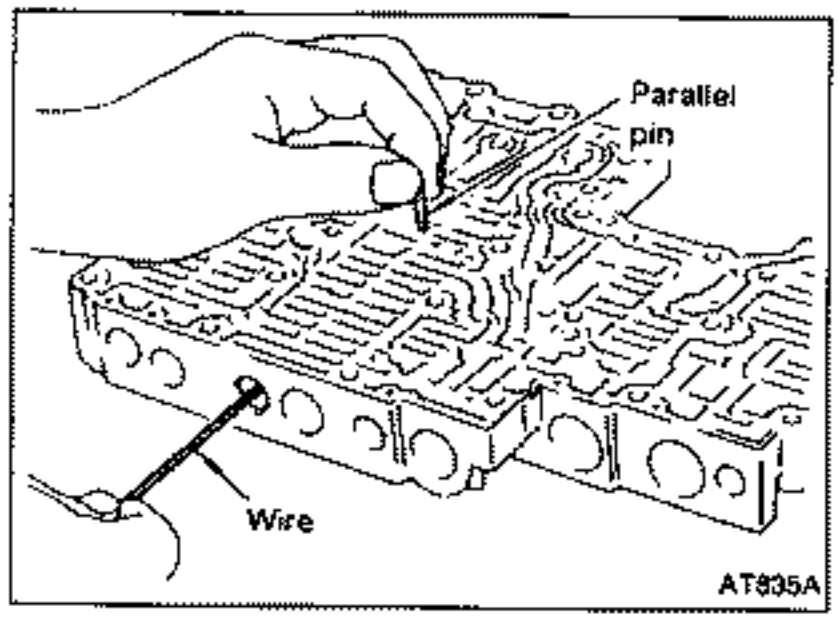

4-2 sequence valve and relay valve

- Push 4-2 sequence valve and relay valve with wire wrapped in vinyl tape to prevent scratching valve body. Install parallel pins.

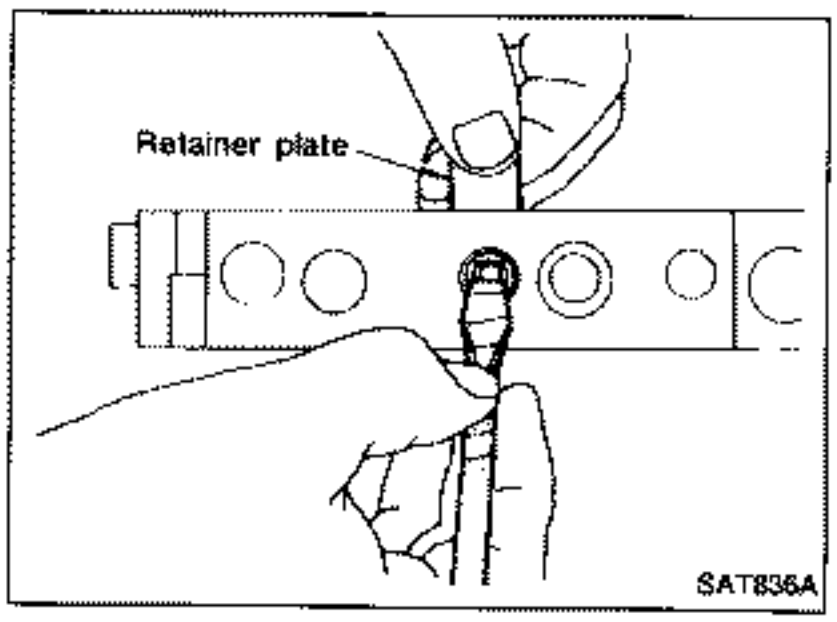

- Insert retainer plate while pushing spring.

Control Valve Lower Body

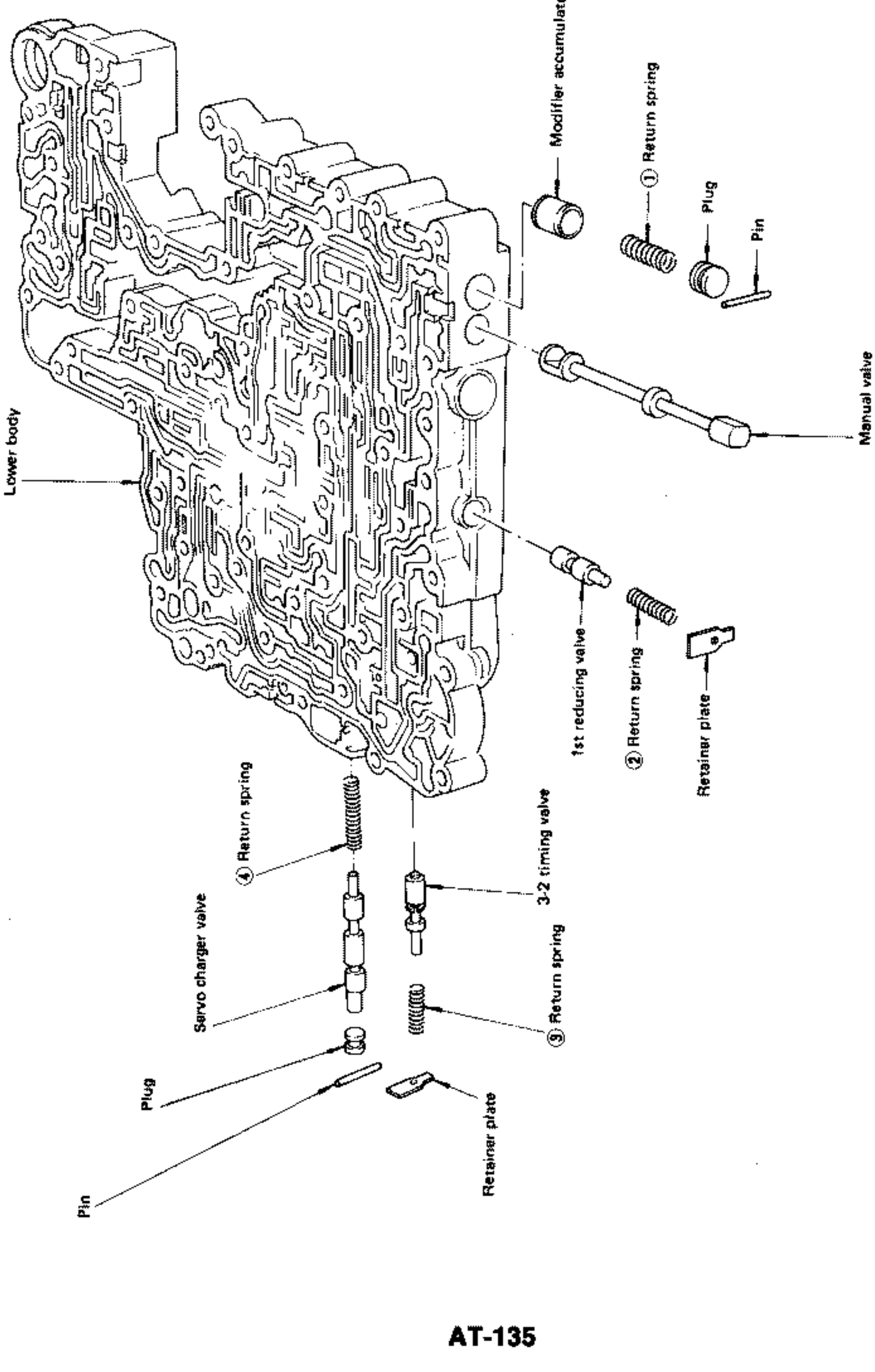

Numbers preceding valve springs correspond with those shown in Spring Chart on page AT-136.

Apply A.T.F. to all component parts before their installation.

SAT640C

Control Valve Lower Body (Cont'd)

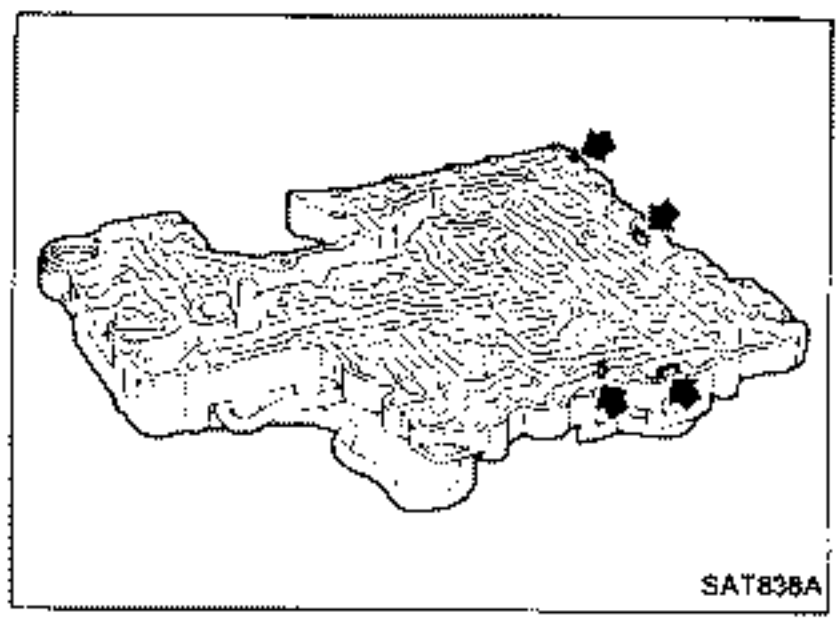

DISASSEMBLY

1. Remove valves at parallel pins.
2. Remove valves at retainer plates.
   For removal procedures, refer to "DISASSEMBLY" of Control Valve Upper Body.

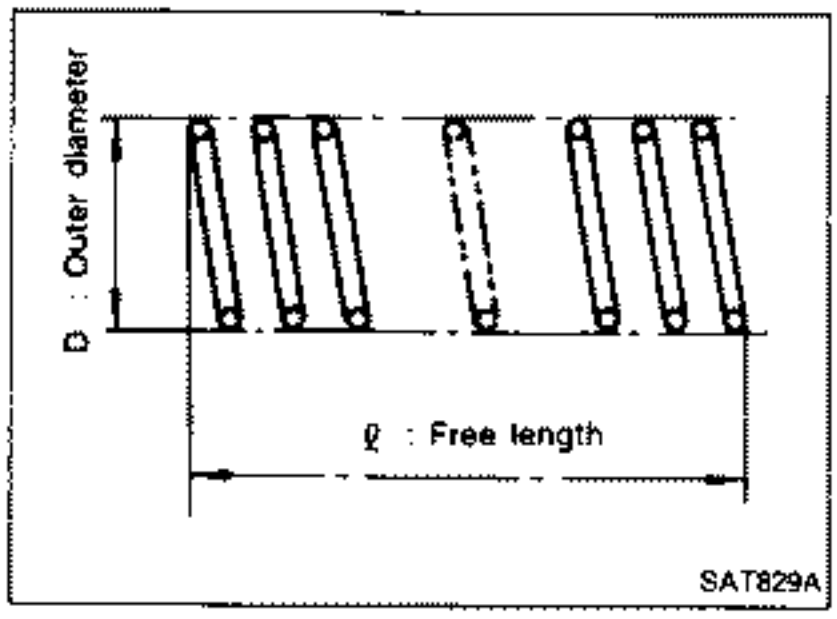

INSPECTION

Valve springs

- Check each valve spring for damage or deformation. Also measure free length and outer diameter.
- Numbers of each valve spring listed in table below are the same as those in the figure on AT-135.

Inspection standard:

Unit: mm (in)

Parts / Item		Part No.	ℓ	D
①	Modifier accumulator piston spring	31742-41X15	30.5 (1.201)	9.8 (0.386)
②	1st reducing valve spring	31756-41X05	25.4 (1.000)	6.75 (0.2657)
③	3-2 timing valve spring	31742-41X08	20.55 (0.8091)	6.75 (0.2657)
④	Servo charger valve spring	31742-41X06	23.0 (0.906)	6.7 (0.264)

- Replace valve springs if deformed or fatigued.

Control valves

- Check sliding surfaces of control valves, sleeves and plugs for damage.

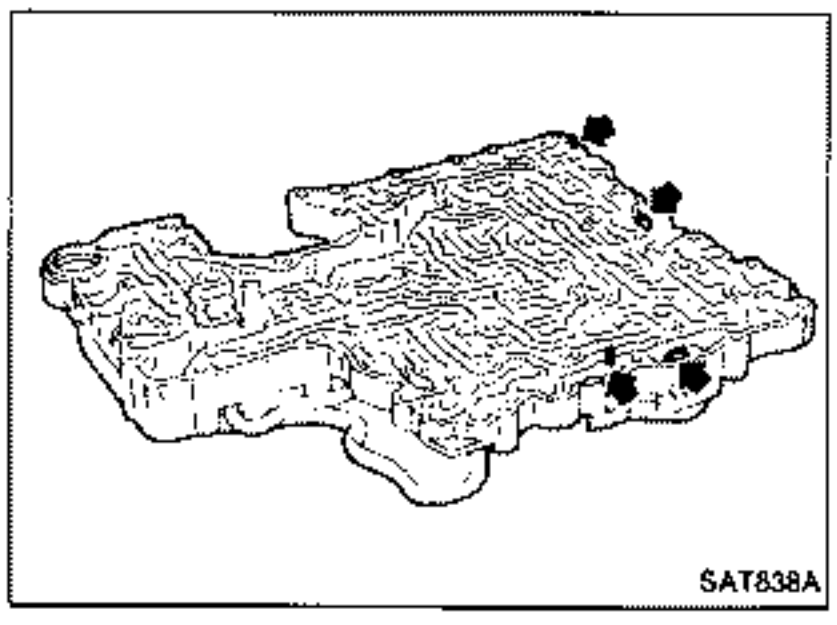

ASSEMBLY

- Install control valves.
  For installation procedures, refer to "ASSEMBLY" of Control Valve Upper Body.

Reverse Clutch

For the number of clutch sheets (drive plate and driven plate), refer to the below cross-section.

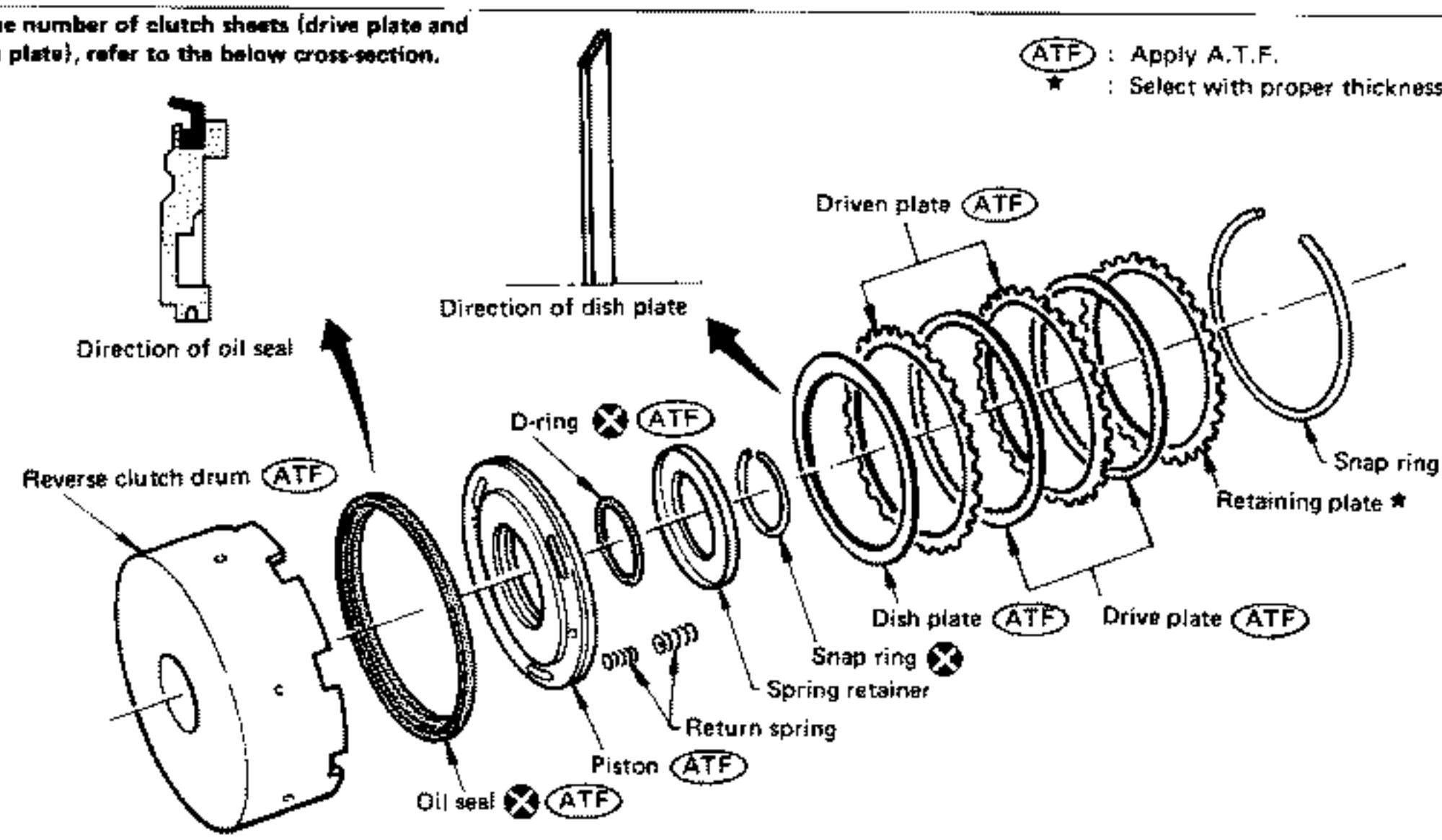

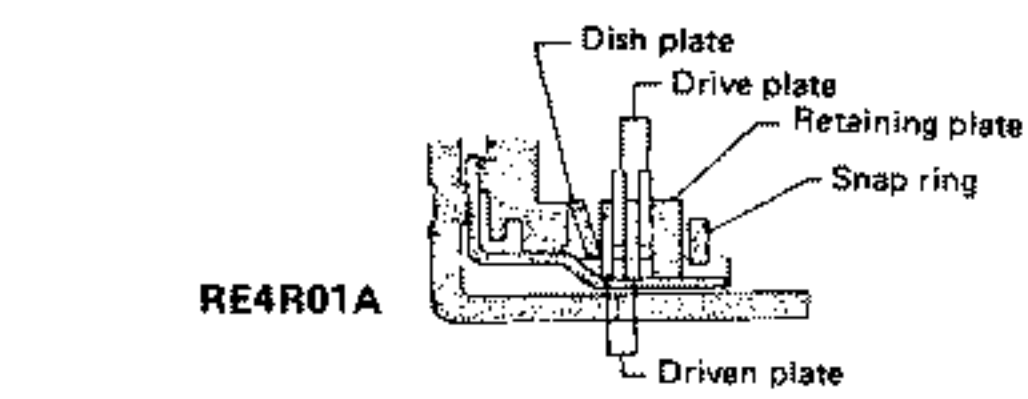

RE4R01A

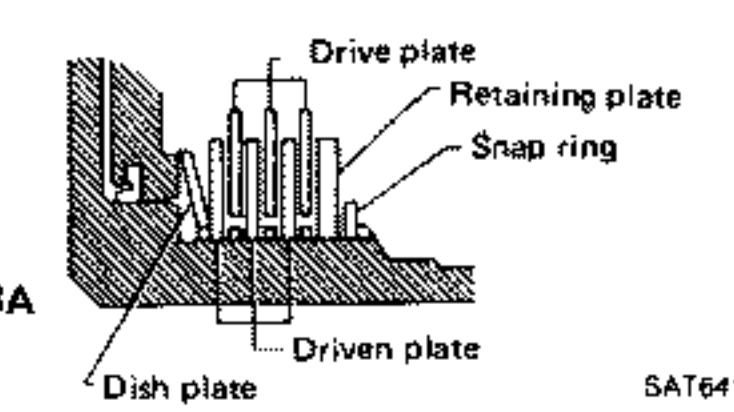

RE4R03A

SAT641C

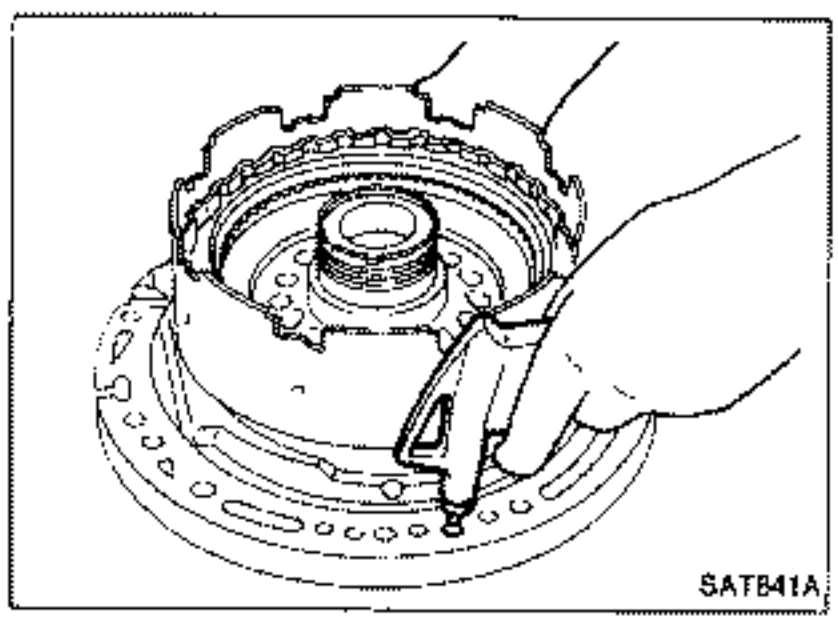

DISASSEMBLY

1. Check operation of reverse clutch.
   a. Install seal ring onto oil pump cover and install reverse clutch. Apply compressed air to oil hole.
   b. Check to see that retaining plate moves to snap ring.
   c. If retaining plate does not move to snap ring, D-ring or oil seal may be damaged or fluid may be leaking at piston check ball.

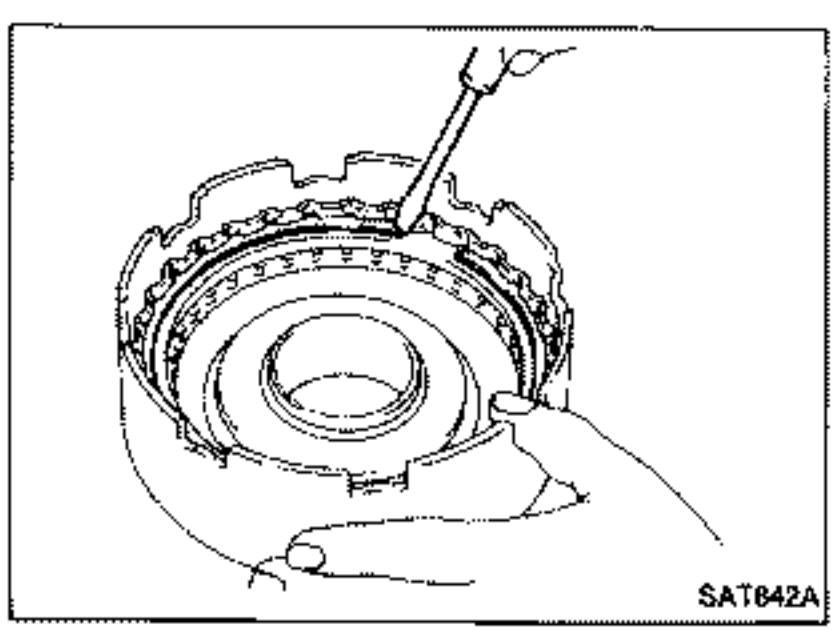

2. Remove drive plates, driven plates, retaining plate, dish plate and snap ring.

Reverse Clutch (Cont'd)

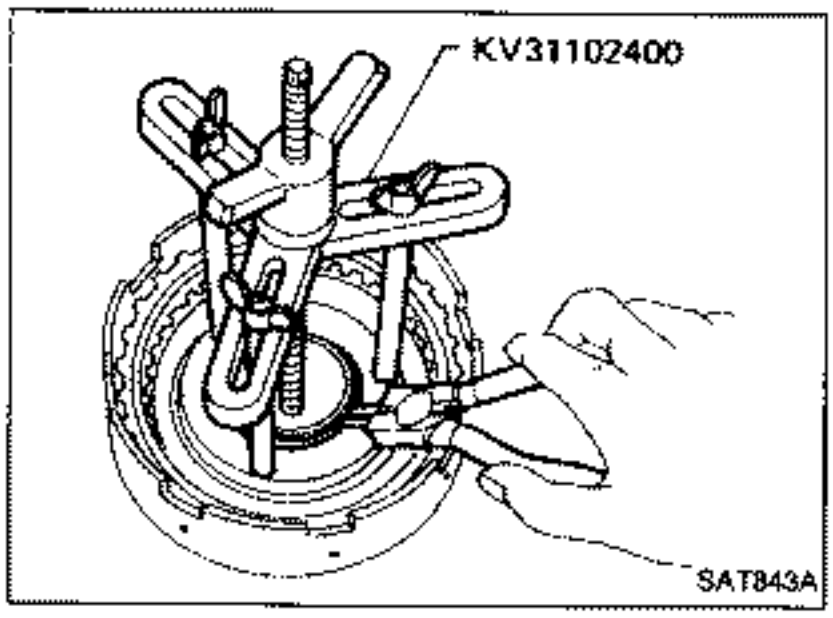

3. Remove snap ring from clutch drum while compressing clutch springs.
- **Do not expand snap ring excessively.**
4. Remove spring retainer and return spring.

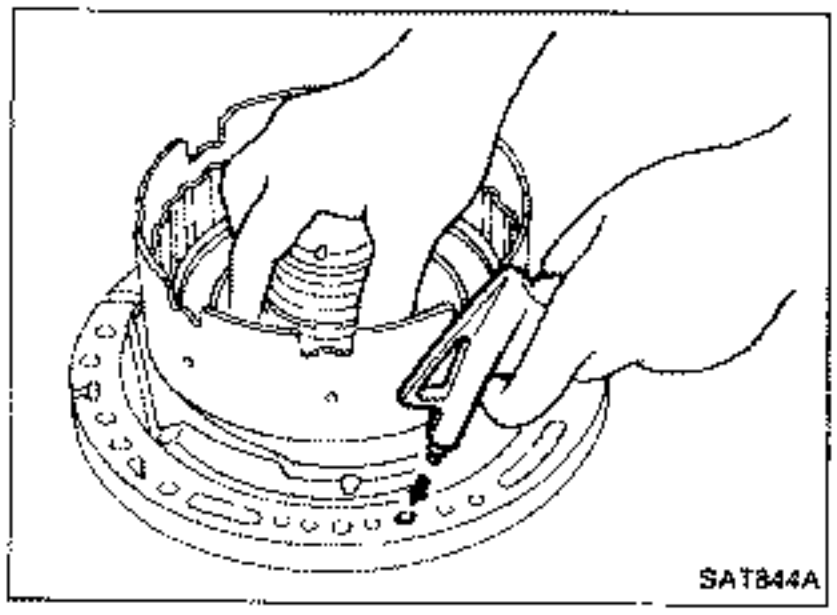

5. Install seal ring onto oil pump cover and install reverse clutch drum. While holding piston, gradually apply compressed air to oil hole until piston is removed.
- **Do not apply compressed air abruptly.**
6. Remove D-ring and oil seal from piston.

INSPECTION

Reverse clutch snap ring and spring retainer

- Check for deformation, fatigue or damage.

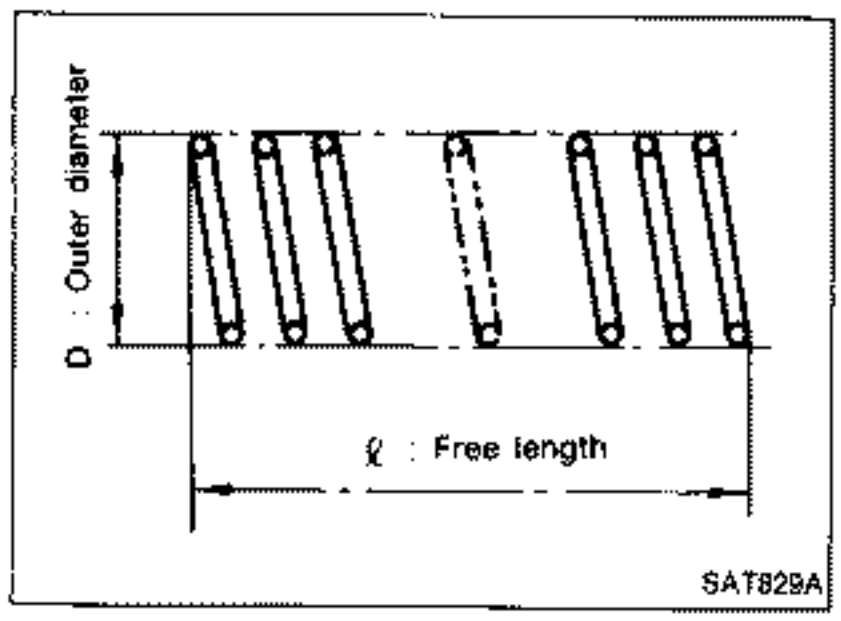

Reverse clutch return springs

- Check for deformation or damage. Also measure free length and outside diameter.

Inspection standard:

Unit: mm (in)

Model	Part No.	ℓ	D
RE4R01A	31505-41X02	19.69 (0.7752)	11.6 (0.457)
RE4R03A	31505-51X00	37.8 (1.488)	14.8 (0.583)

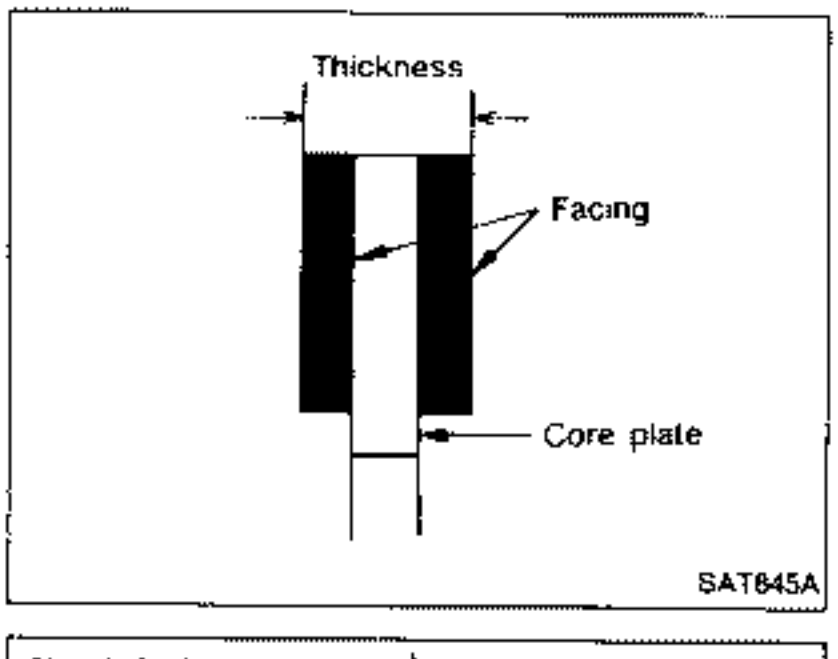

Reverse clutch drive plates

- Check facing for burns, cracks or damage.
- Measure thickness of facing.
  Thickness of drive plate:
  Standard value: 2.0 mm (0.079 in)
  Wear limit: 1.8 mm (0.071 in)
- If not within wear limit, replace.

Reverse clutch dish plate

- Check for deformation or damage.

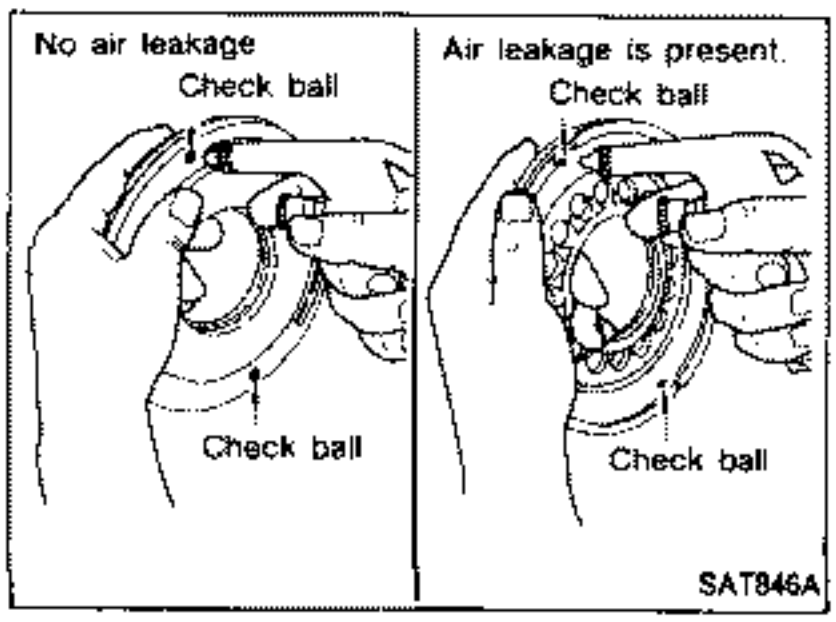

Reverse clutch piston

- Shake piston to assure that balls are not seized.
- Apply compressed air to check ball oil hole opposite the return spring to assure that there is no air leakage.
- Also apply compressed air to oil hole on return spring side to assure that air leaks past ball.

Reverse Clutch (Cont'd)

ASSEMBLY

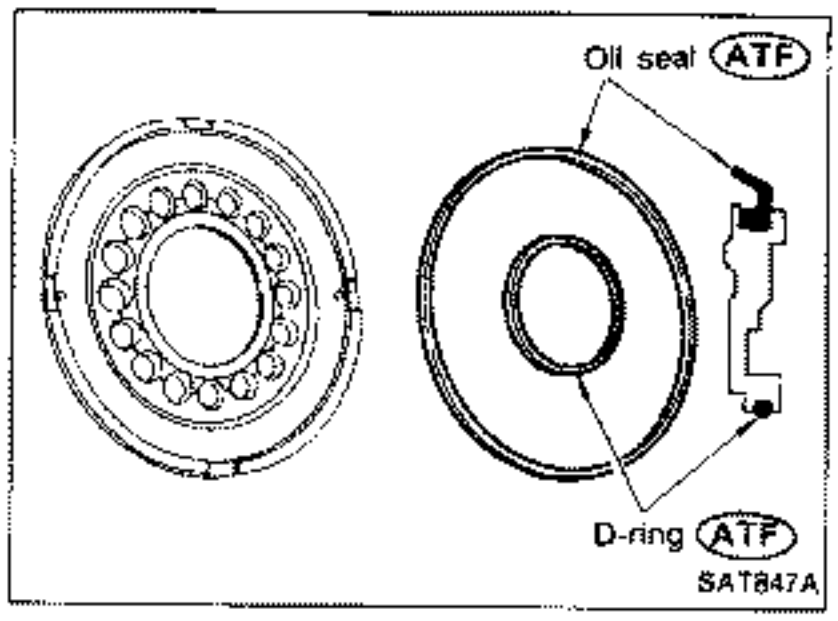

1. Install D-ring and oil seal on piston.

- **Apply A.T.F. to both parts.**

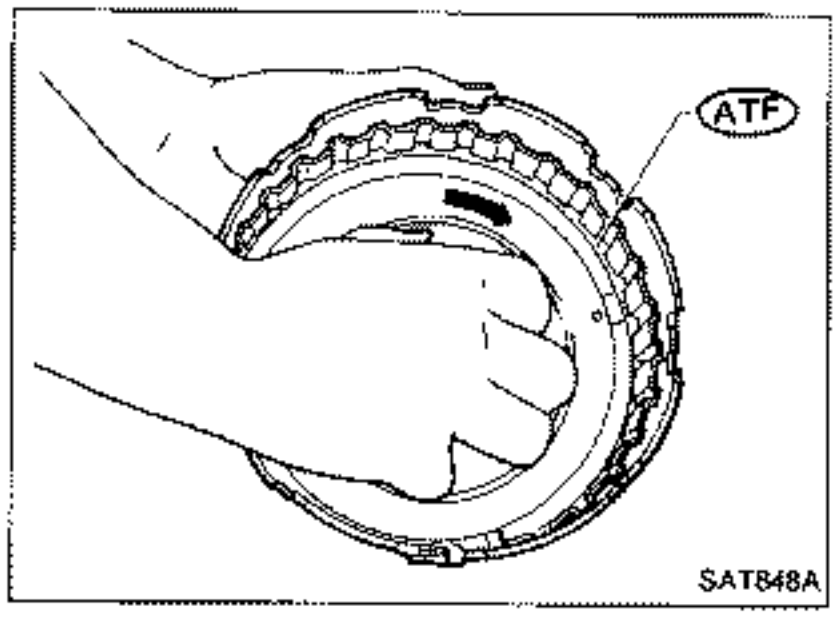

2. Install piston assembly by turning it slowly and evenly.

- **Apply A.T.F. to Inner surface of drum.**

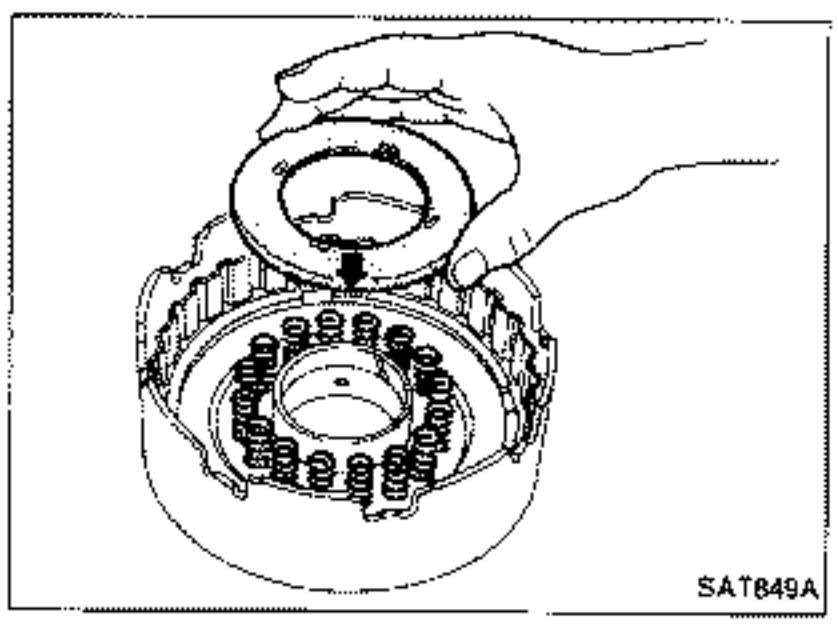

3. Install return springs and spring retainer.

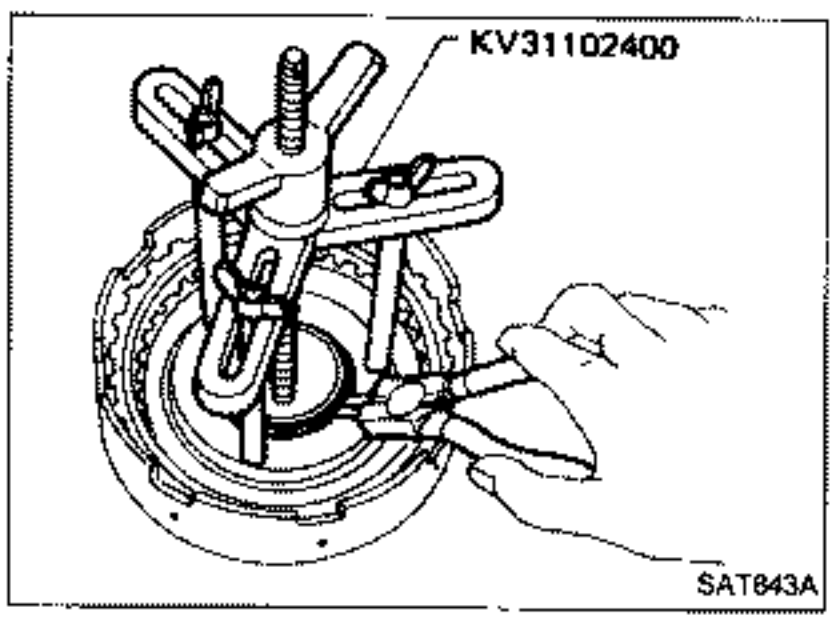

4. Install snap ring while compressing clutch springs.

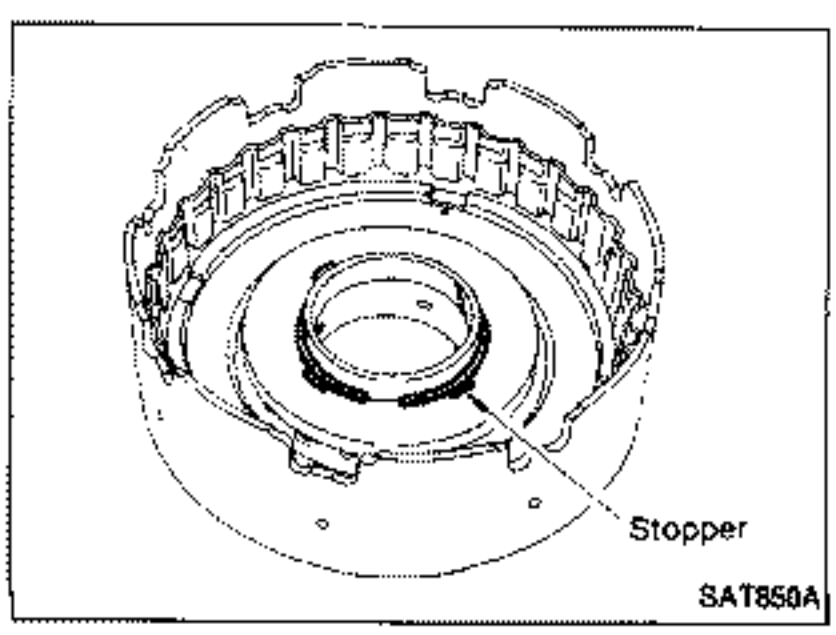

- **Do not align snap ring gap with spring retainer stopper.**

Reverse Clutch (Cont'd)

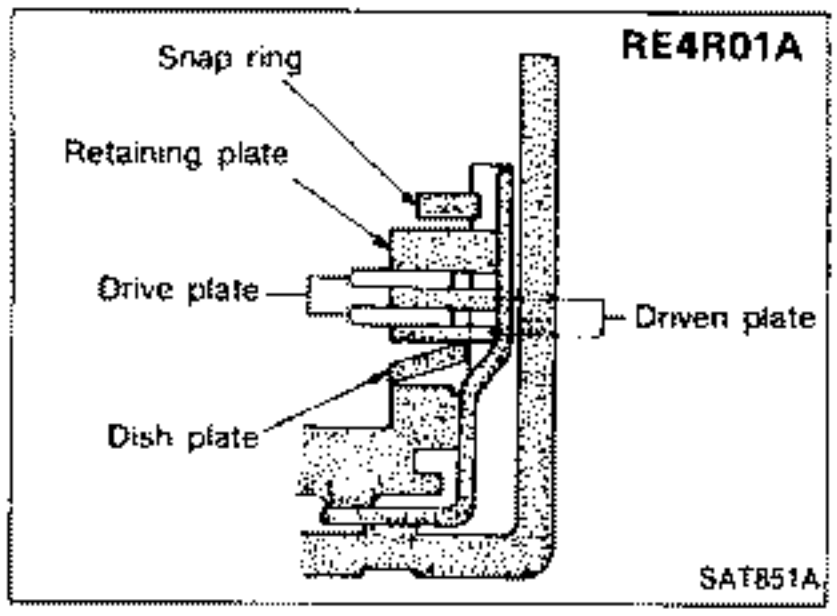

5. Install drive plates, driven plates, retaining plate and dish plate.

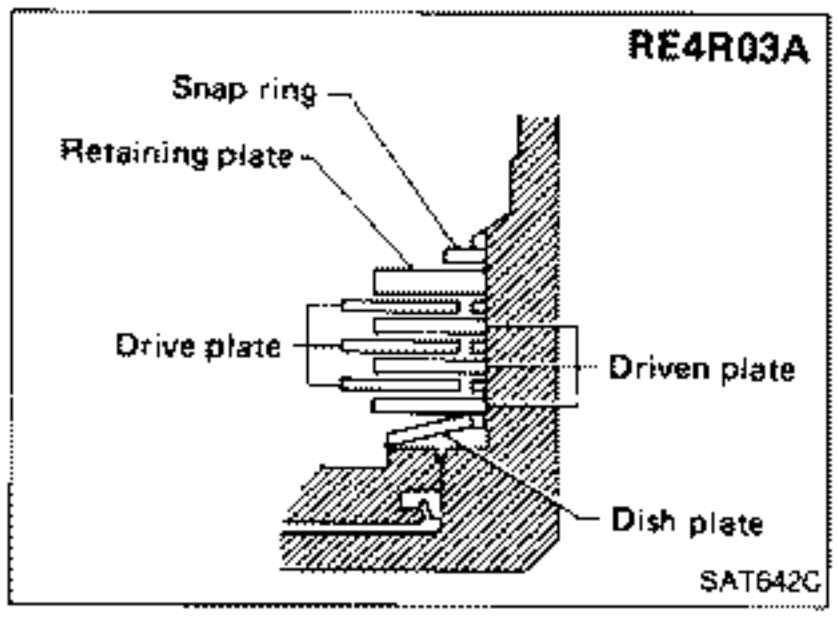

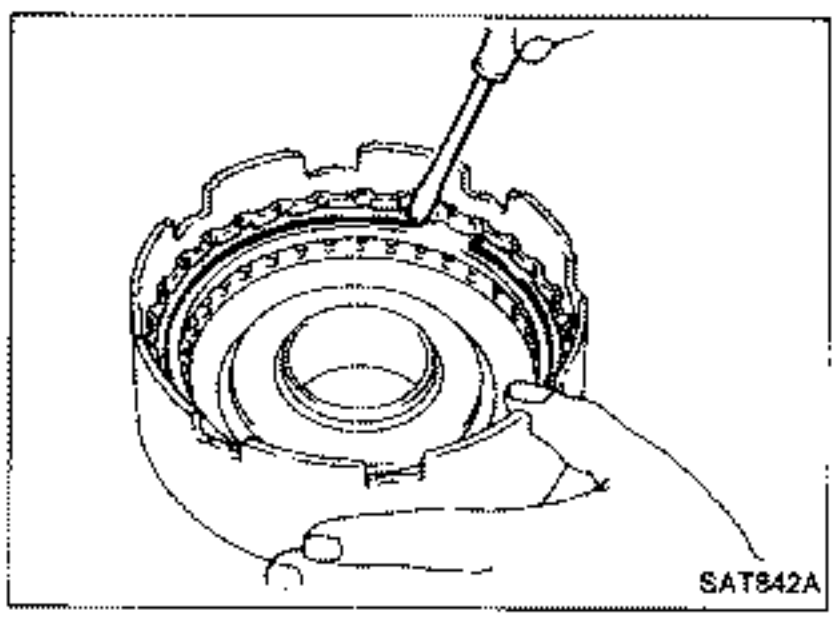

6. Install snap ring.

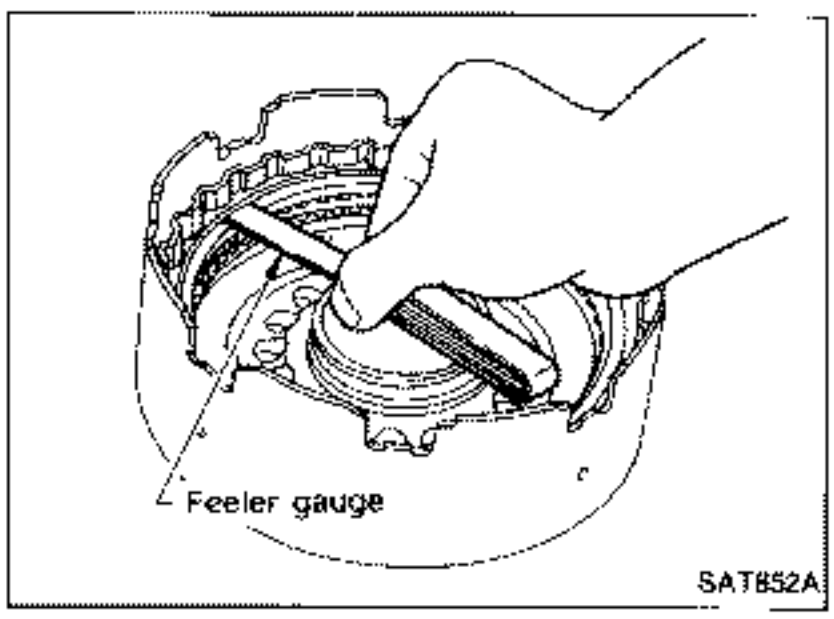

7. Measure clearance between retaining plate and snap ring. If not within allowable limit, select proper retaining plate.

Specified clearance:

Standard

0.5 - 0.8 mm (0.020 - 0.031 in)

Allowable limit

1.2 mm (0.047 in)

Retaining plate:

Refer to S.D.S.

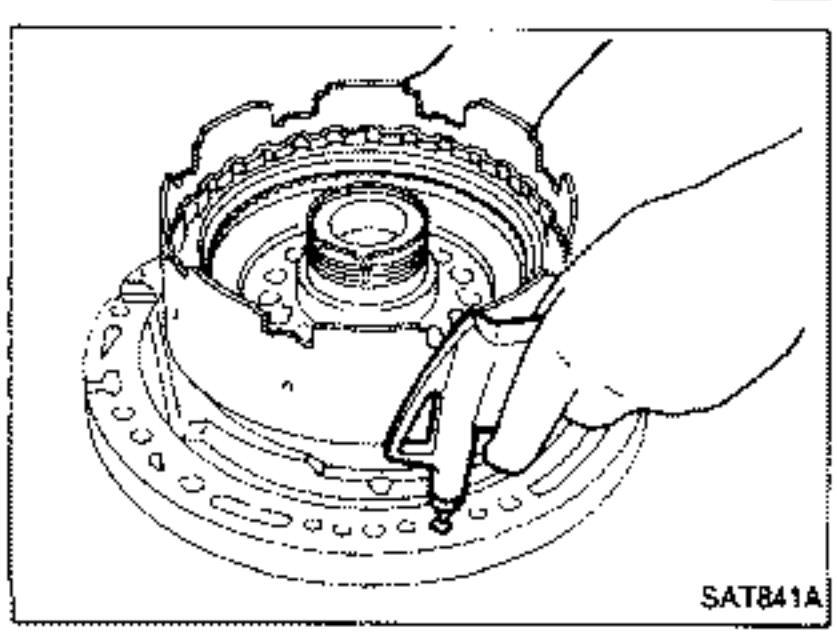

8. Check operation of reverse clutch.
Refer to "DISASSEMBLY" of Reverse Clutch.

High Clutch

RE4R01A

For the number of clutch sheets (drive plate and driven plate), refer to the below cross-section.

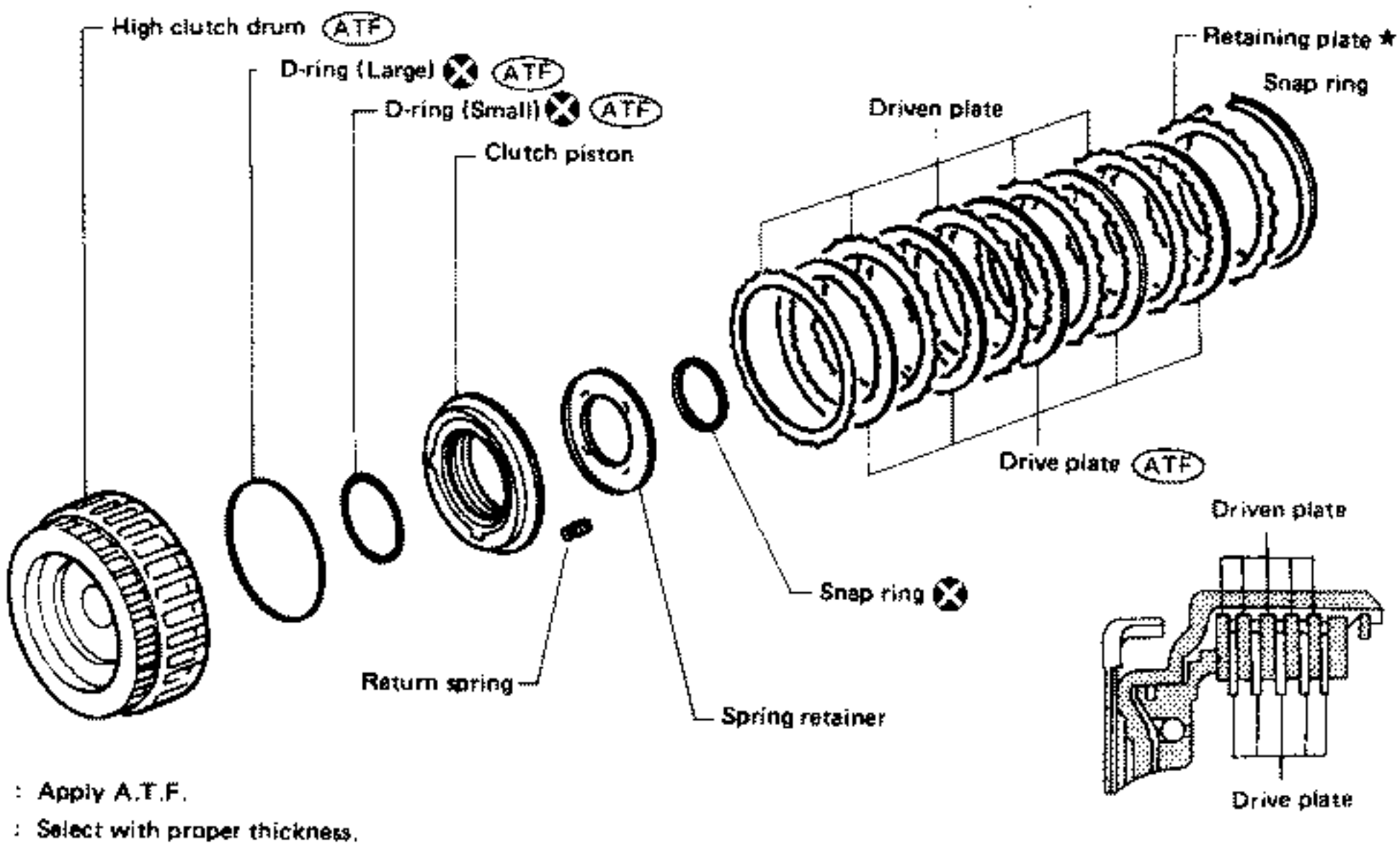

SAT365C

RE4R03A

For the number of clutch sheets (drive plate and driven plate), refer to the below cross-section.

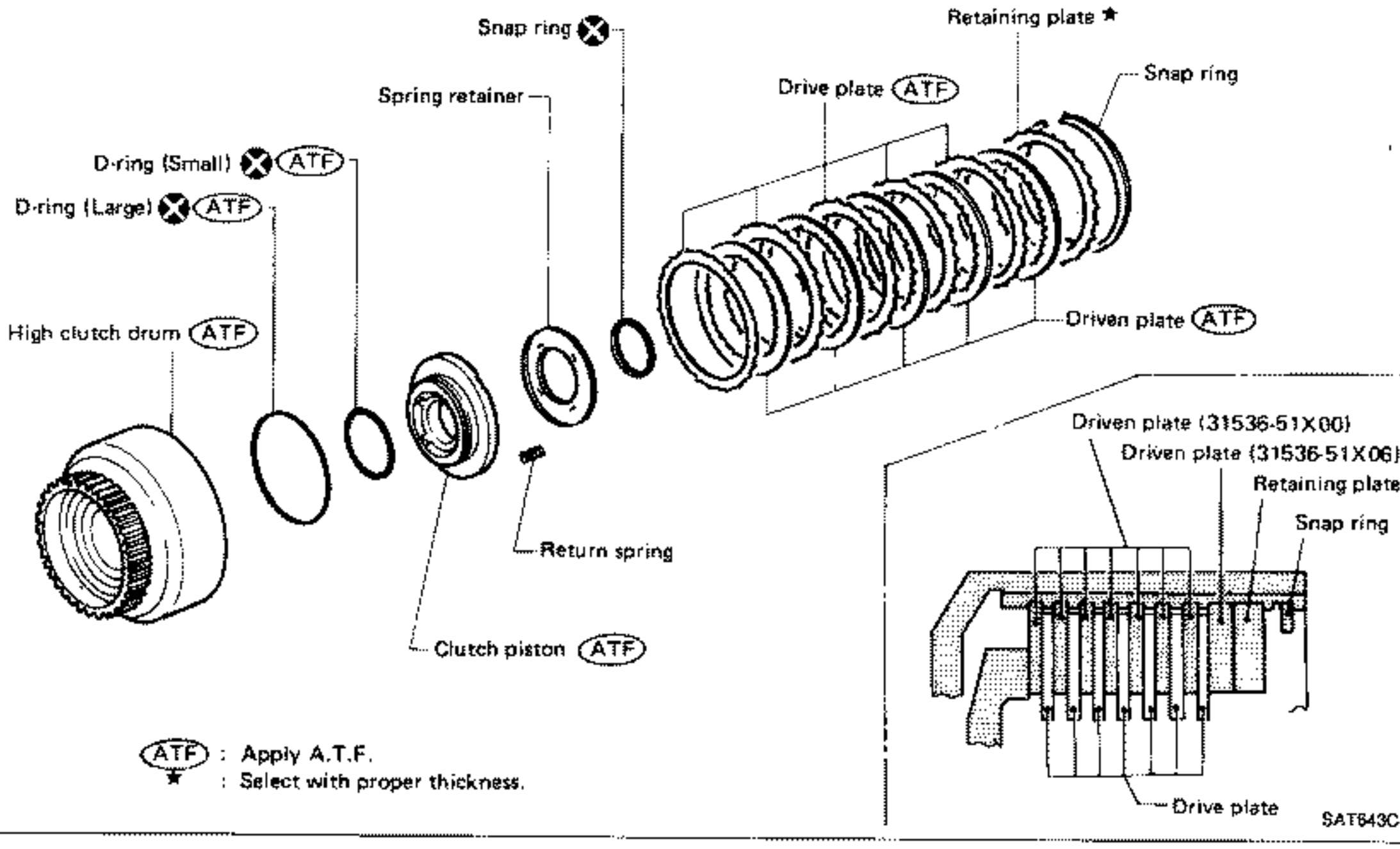

SAT643C

High Clutch (Cont'd)

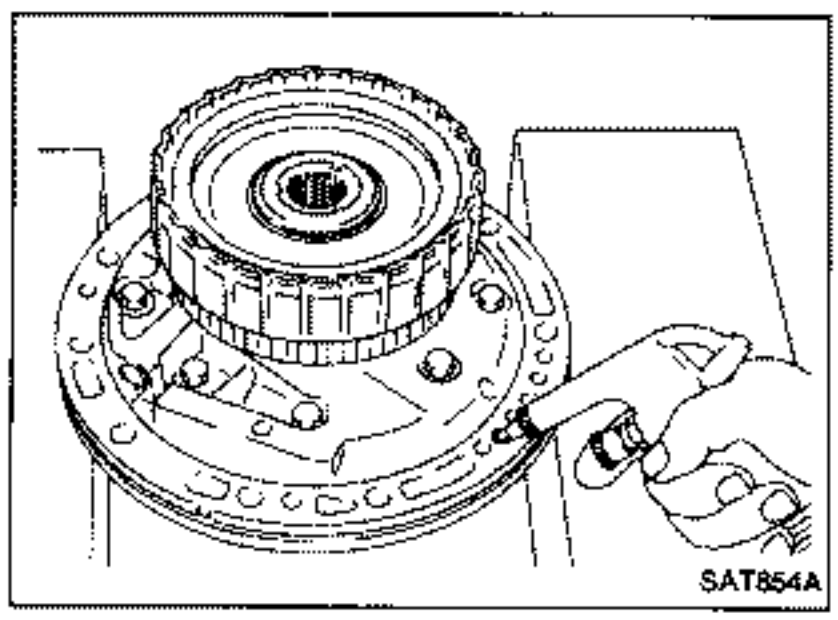

Service procedures for high clutch are essentially the same as those for reverse clutch, with the following exception:

- Check of high clutch operation

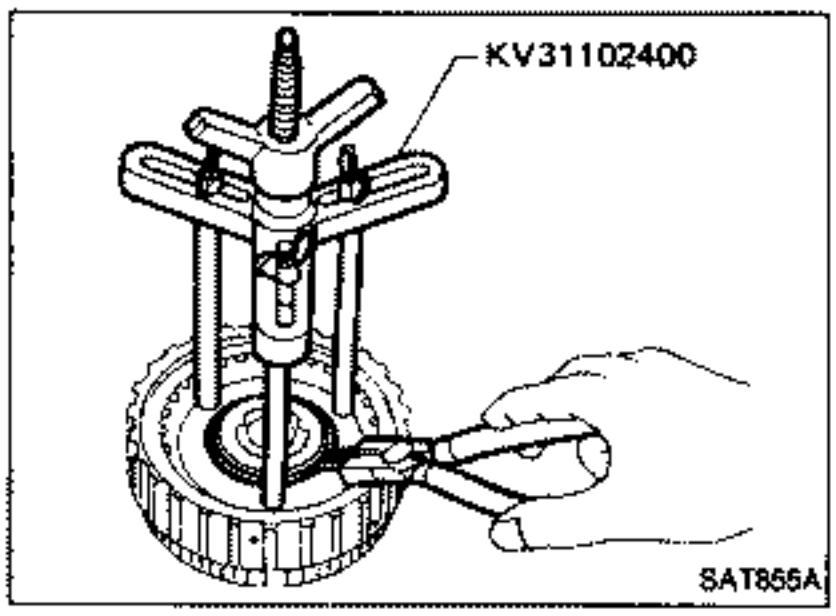

- Removal and installation of return spring

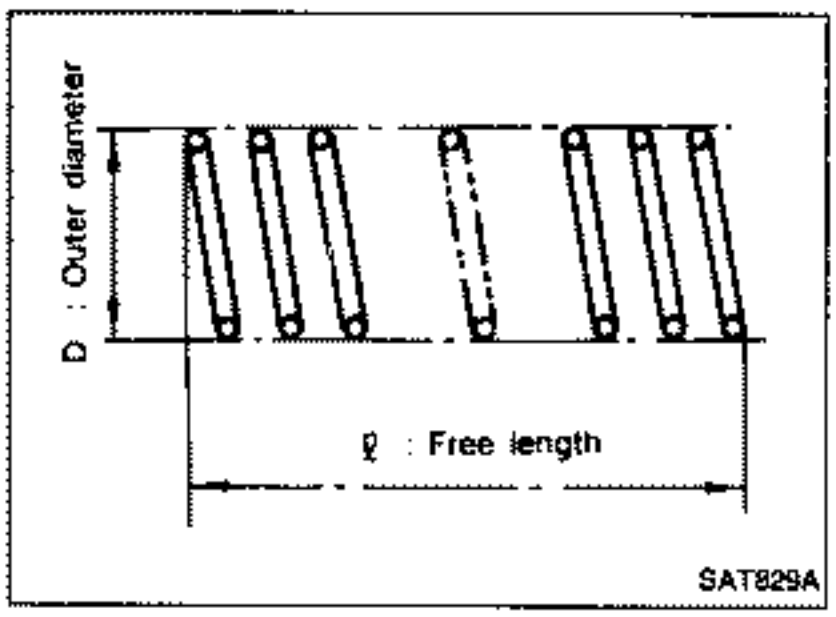

- Inspection of high clutch return springs

Inspection standard:

Unit: mm (in)

Part No.	ℓ	D
31505-21X03	22.06 (0.8685)	11.6 (0.457)

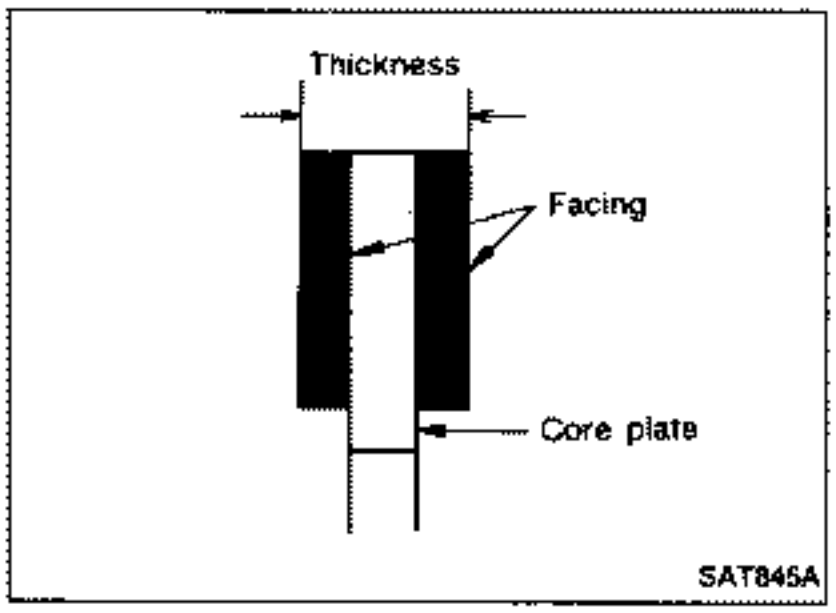

- inspection of high clutch drive plate

Thickness of drive plate:

Standard

1.6 mm (0.063 in)

Wear limit

1.4 mm (0.055 in)

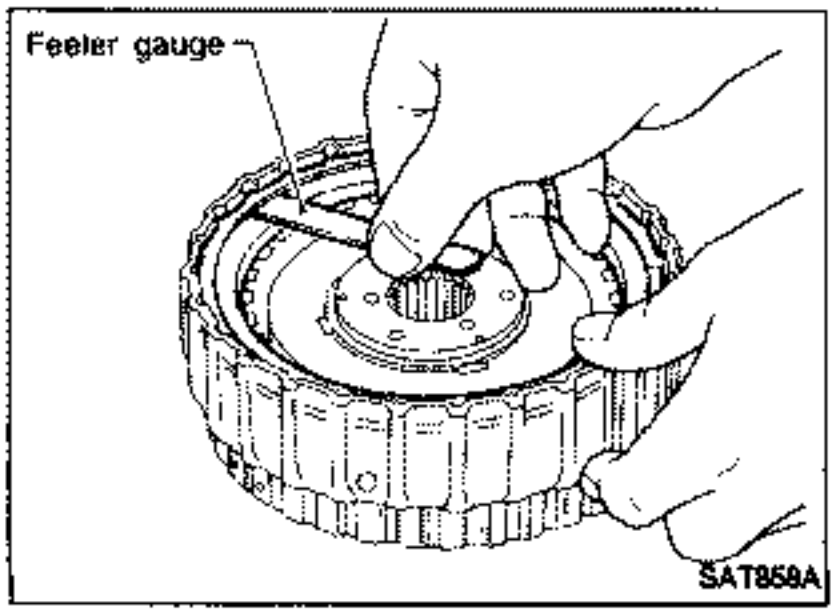

- Measurement of clearance between retaining plate and snap ring

Specified clearance:

Standard

1.8 - 2.2 mm (0.071 - 0.087 in)

Allowable limit

3.2 mm (0.126 in)

Retaining plate:

Refer to S.D.S.

Forward and Overrun Clutches

For the number of clutch sheets (drive plate and driven plate), refer to the below cross-section.

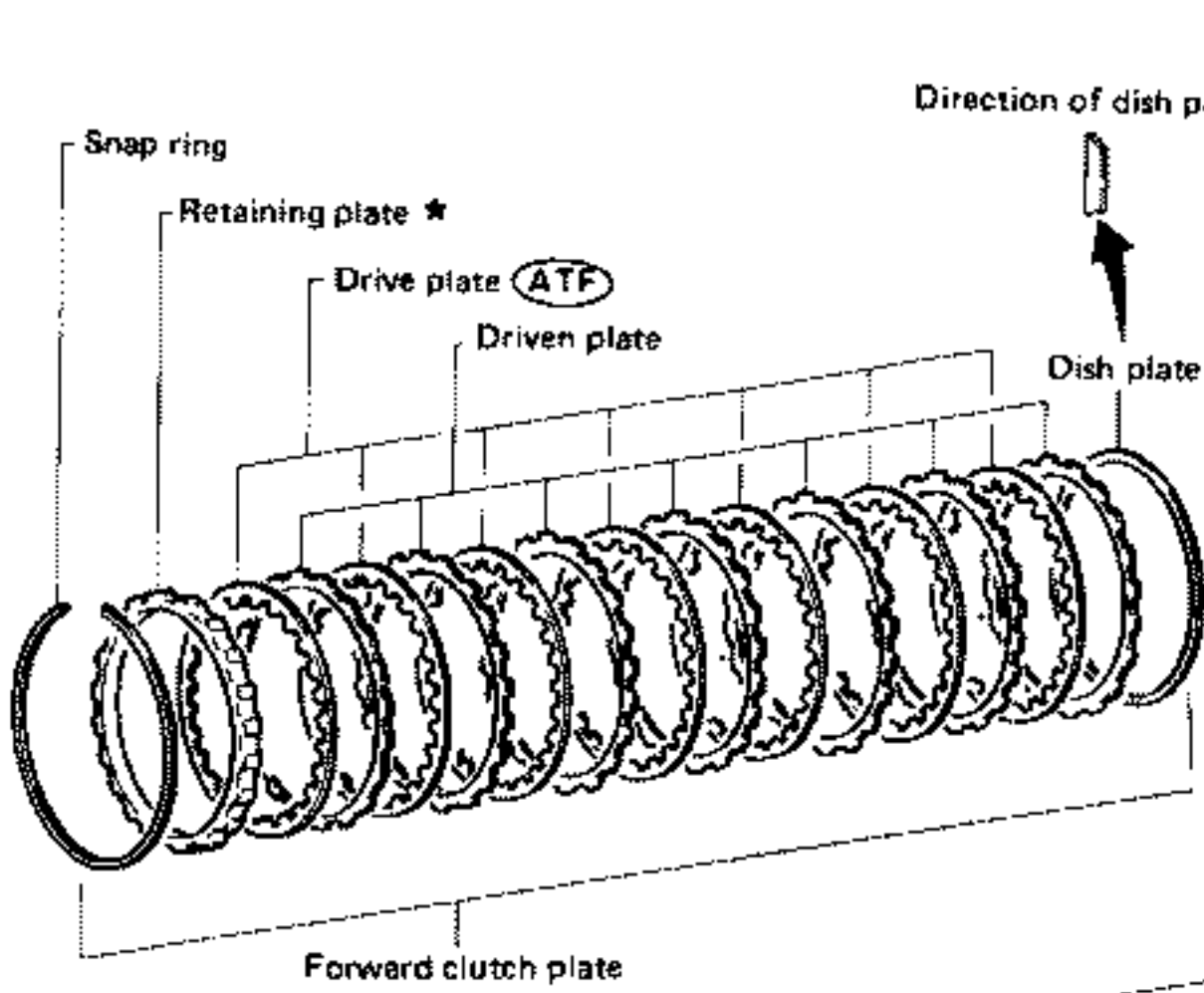

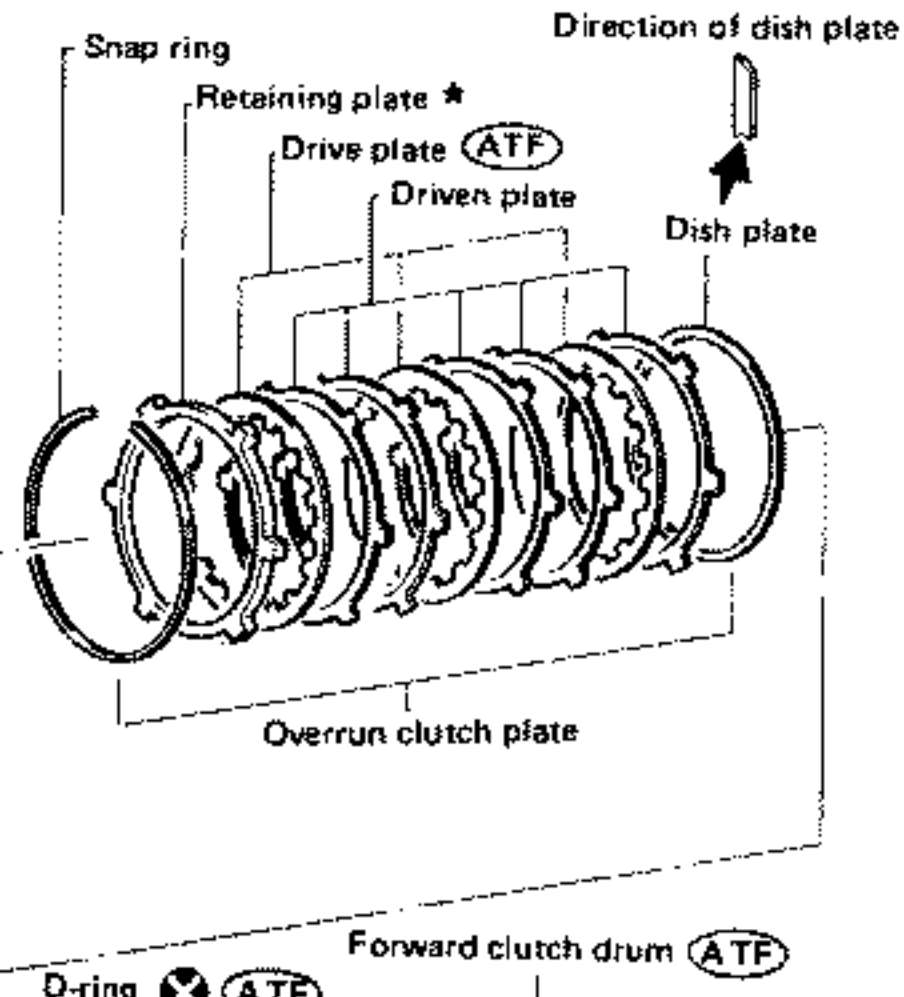

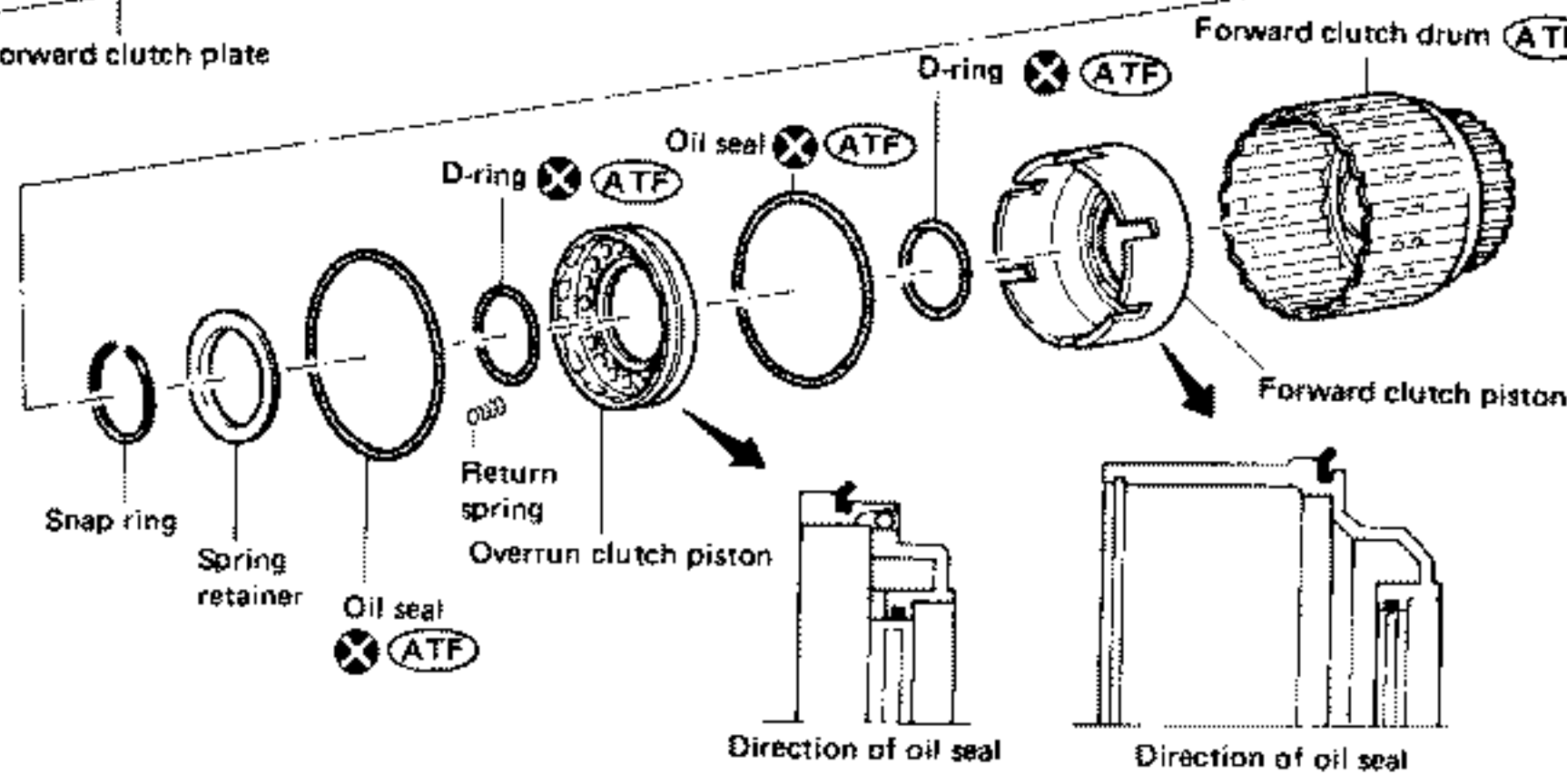

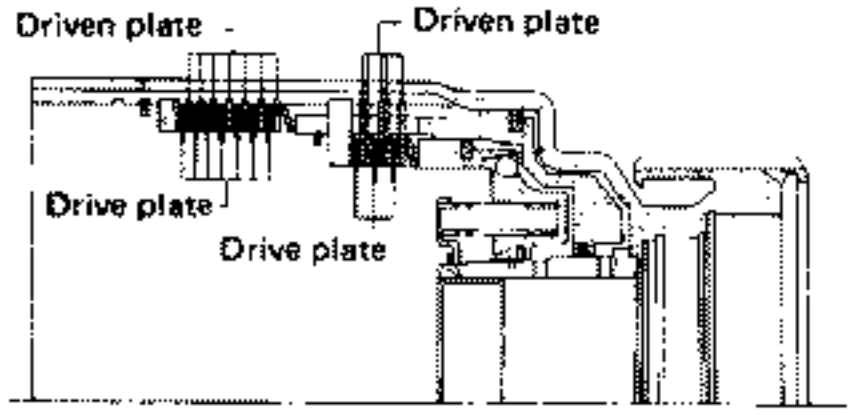

RE4R01A

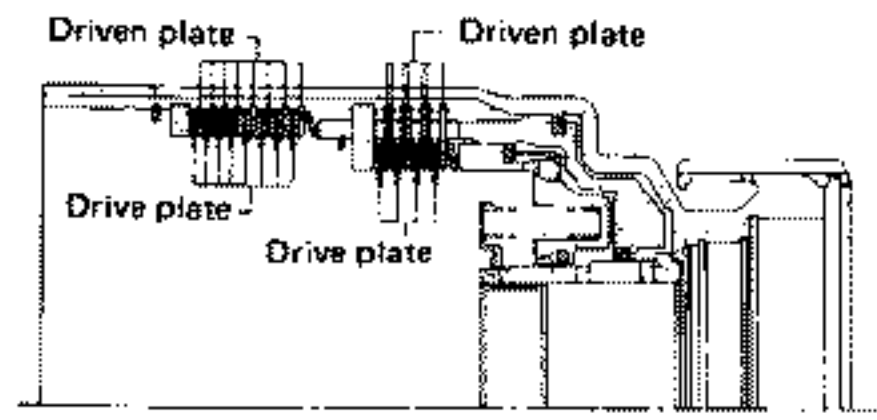

RE4R03A

(ATF): Apply A.T.F.
★ : Select with proper thickness.

SAT644C

Forward and Overrun Clutches (Cont'd)

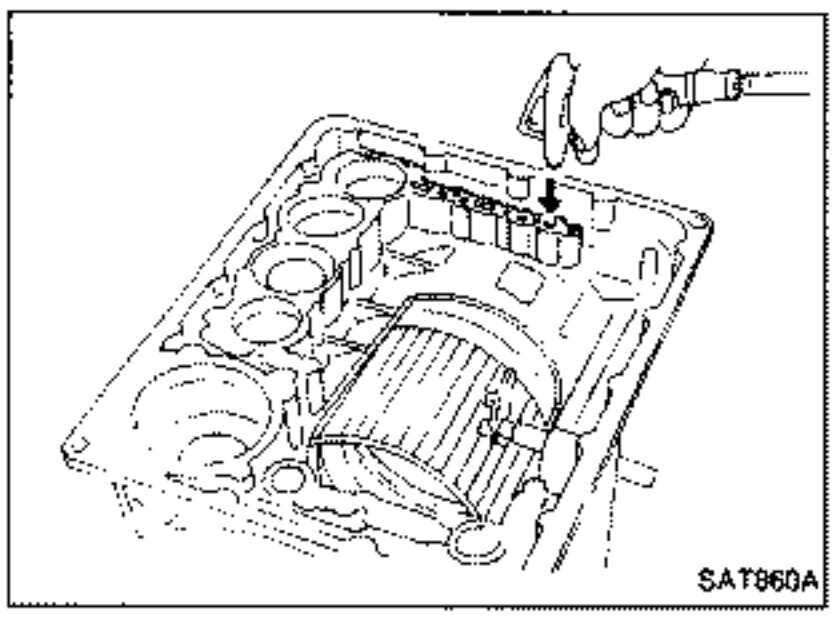

Service procedures for forward and overrun clutches are essentially the same as those for reverse clutch, with the following exception:

- Check of forward clutch operation.

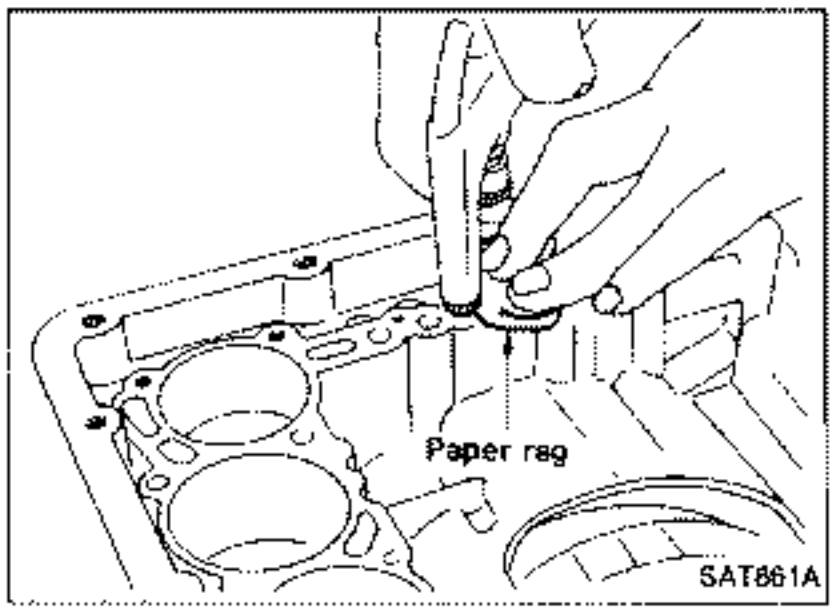

- Check of overrun clutch operation.

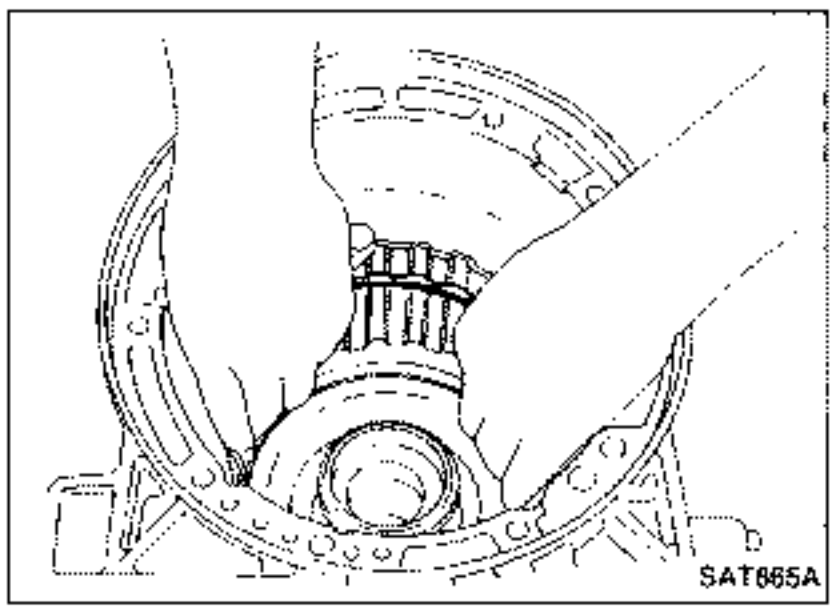

- Removal of forward clutch drum
  Remove forward clutch drum from transmission case by holding snap ring.

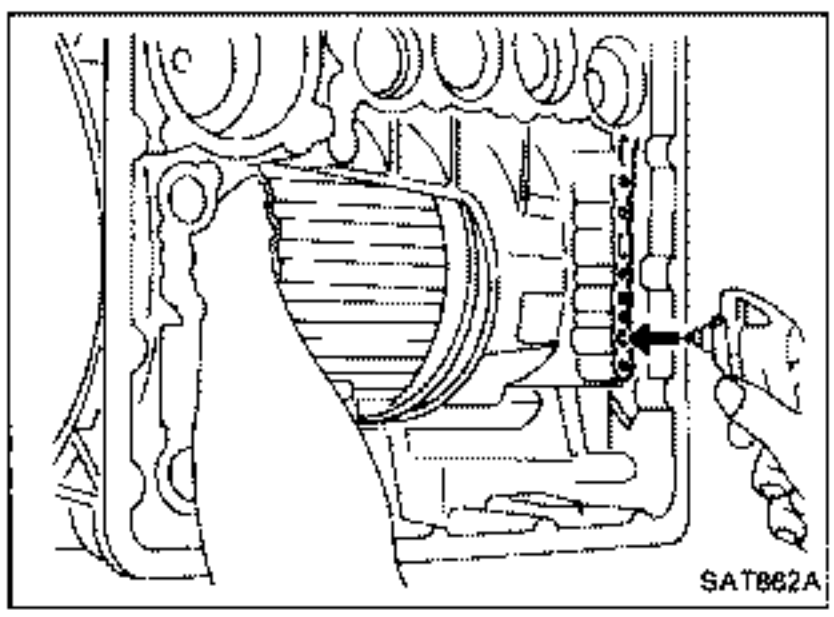

- Removal of forward clutch and overrun clutch pistons

1. While holding overrun clutch piston, gradually apply compressed air to oil hole.

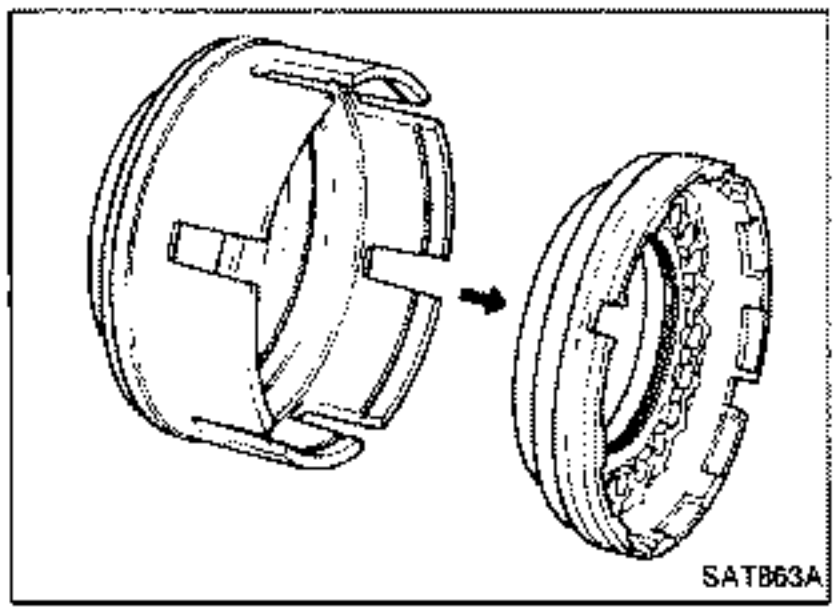

2. Remove overrun clutch from forward clutch.

Forward and Overrun Clutches (Cont'd)

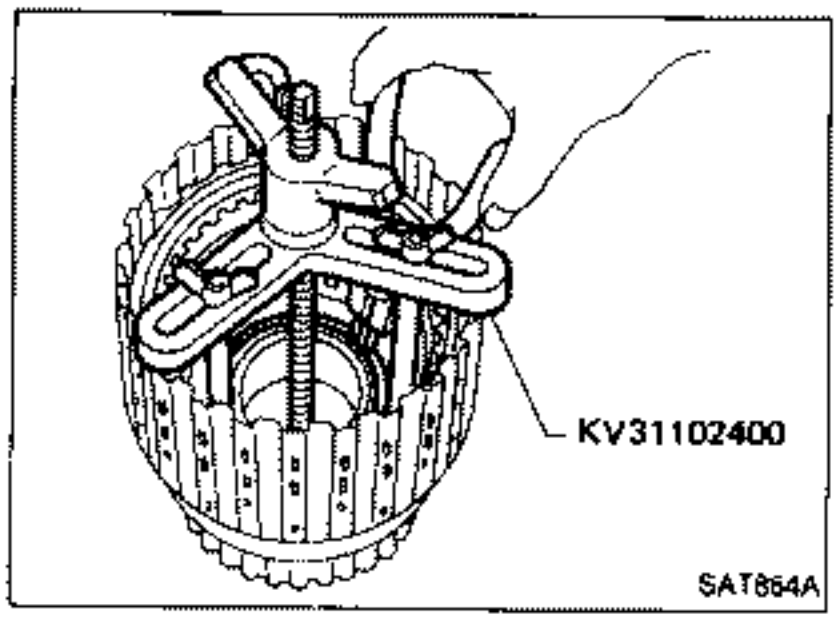

- Removal and installation of return springs

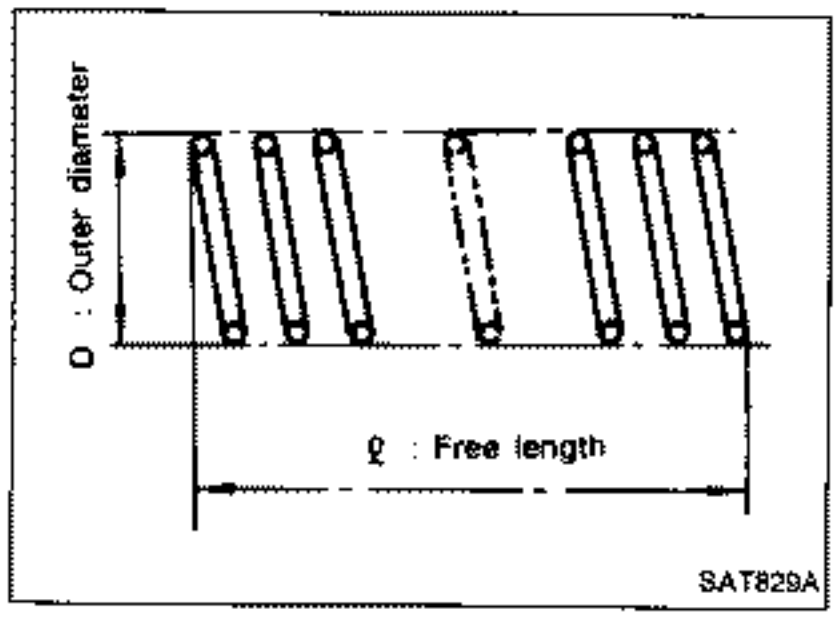

- Inspection of forward clutch and overrun clutch return springs

Inspection standard:

Unit: mm (in)

Model	Part No.	ℓ	D
RE4R01A	31505-41X01	35.77 (1.4083)	9.7 (0.382)
RE4R03A	31505-51X04	36.8 (1.449)	9.8 (0.386)

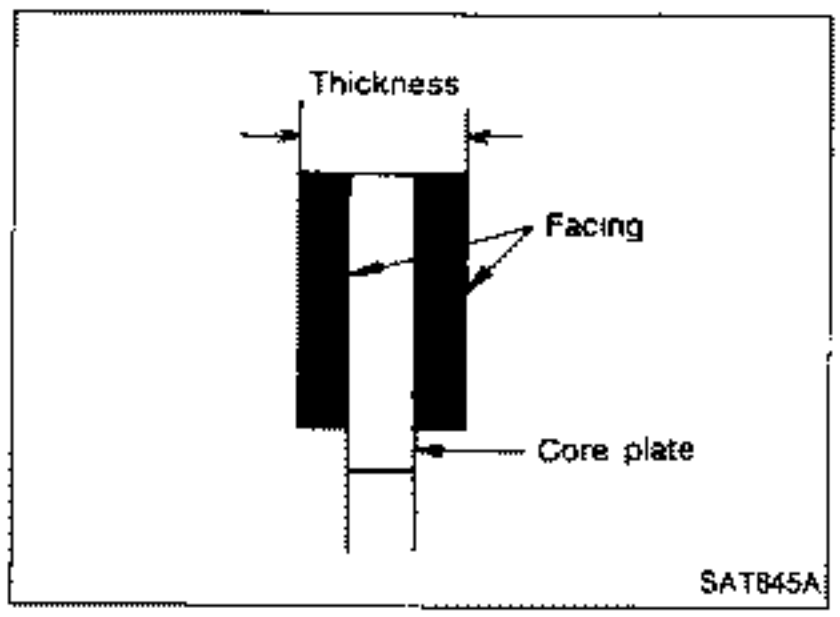

- Inspection of forward clutch drive plates
  Thickness of drive plate:
  Standard
  1.6 mm (0.063 in) (RE4R01A)
  2.0 mm (0.079 in) (RE4R03A)
  Wear limit
  1.4 mm (0.055 in) (RE4R01A)
  1.6 mm (0.063 in) (RE4R03A)

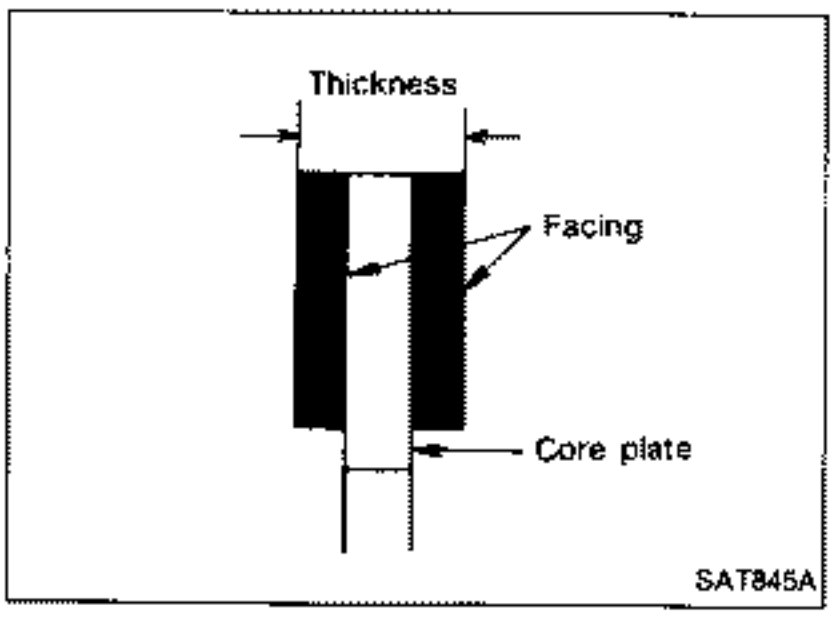

- Inspection of overrun clutch drive plates
  Thickness of drive plate:
  Standard
  2.0 mm (0.079 in) (RE4R01A)
  1.6 mm (0.063 in) (RE4R03A)
  Wear limit
  1.8 mm (0.071 in) (RE4R01A)
  1.4 mm (0.055 in) (RE4R03A)

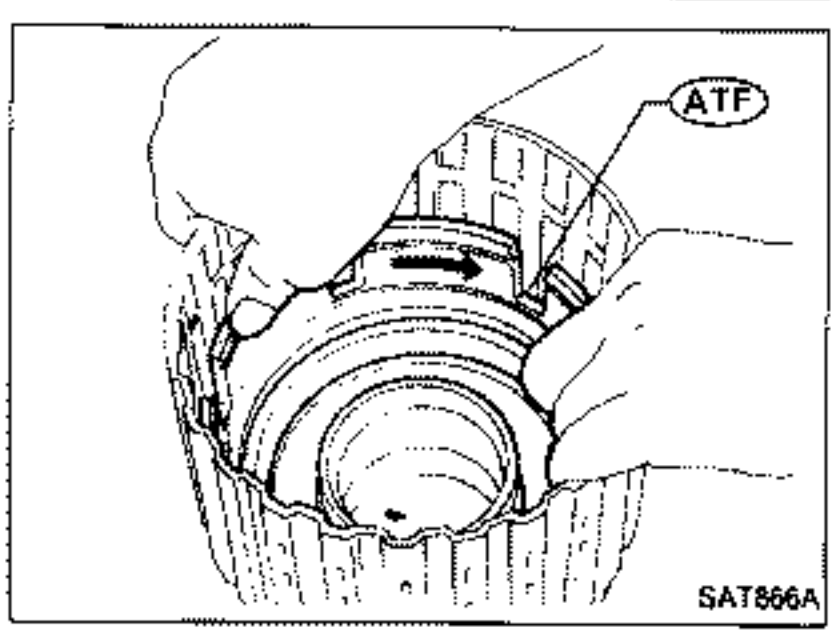

- Installation of forward clutch piston and overrun clutch piston

1. Install forward clutch piston by turning it slowly and evenly.

- **Apply A.T.F. to inner surface of clutch drum.**

Forward and Overrun Clutches (Cont'd)

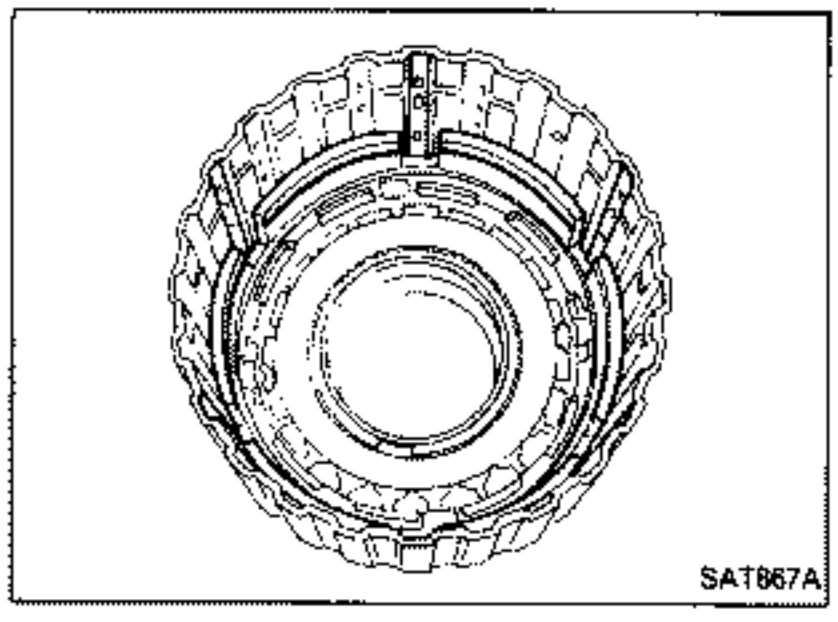

- **Align notch in forward clutch piston with groove in forward clutch drum.**

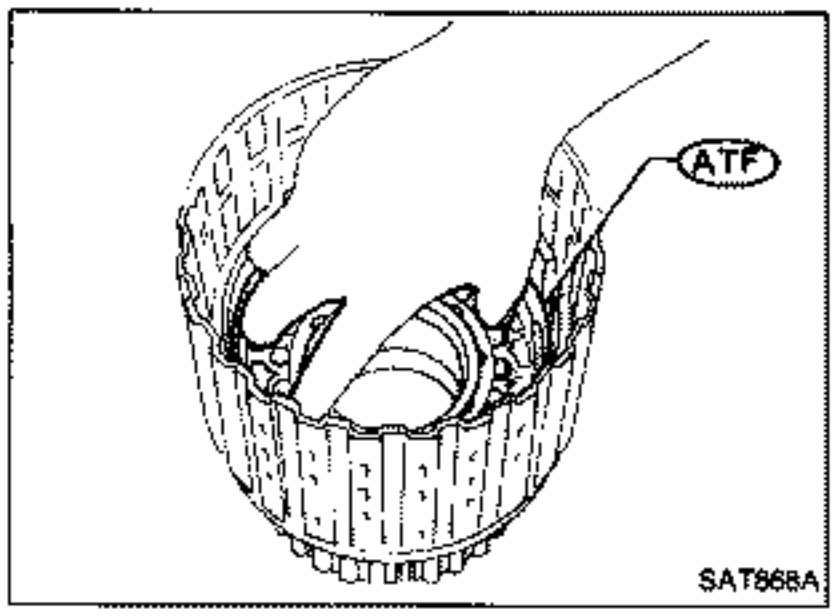

2. Install overrun clutch by turning it slowly and evenly.
- **Apply A.T.F. to inner surface of forward clutch piston.**

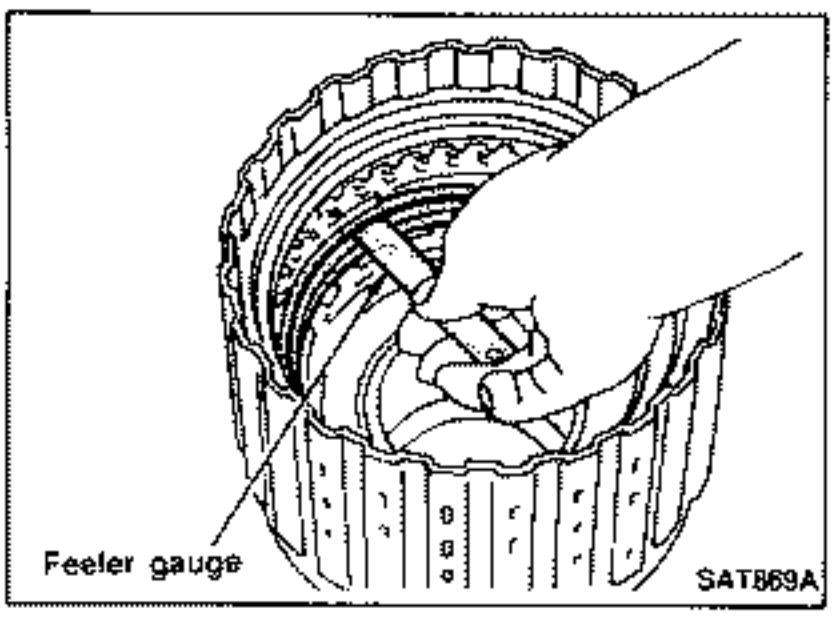

- Measurement of clearance between retaining plate and snap ring of overrun clutch
  Specified clearance:
  Standard
  1.0 - 1.4 mm (0.039 - 0.055 in)
  Allowable limit
  2.0 mm (0.079 in) (RE4R01A)
  2.2 mm (0.087 in) (RE4R03A)
  Retaining plate:
  Refer to S.D.S.

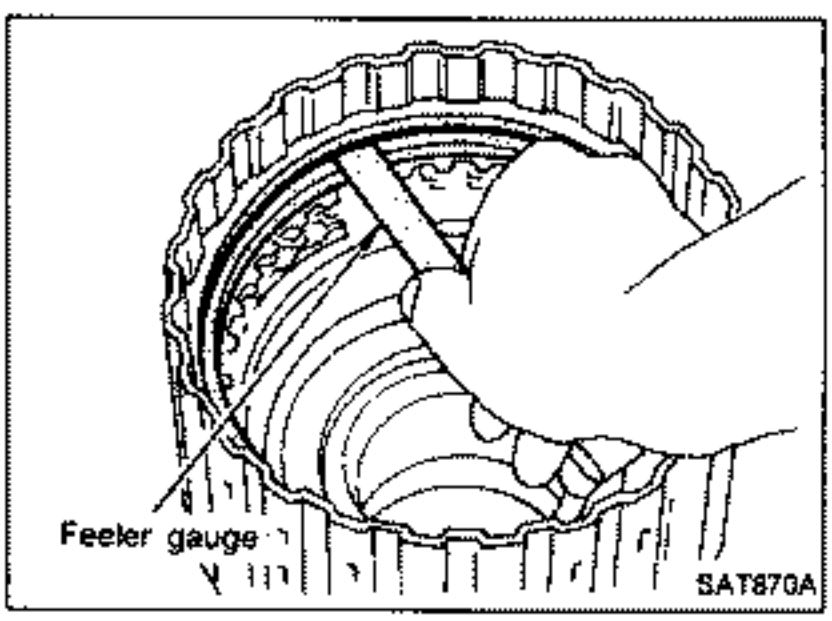

- Measurement of clearance between retaining plate and snap ring of forward clutch
  Specified clearance:
  Standard
  0.45 - 0.85 mm (0.0177 - 0.0335 in)
  Allowable limit
  2.25 mm (0.0886 in) (RE4R01A)
  2.45 mm (0.0965 in) (RE4R03A)
  Retaining plate:
  Refer to S.D.S.

Low & Reverse Brake

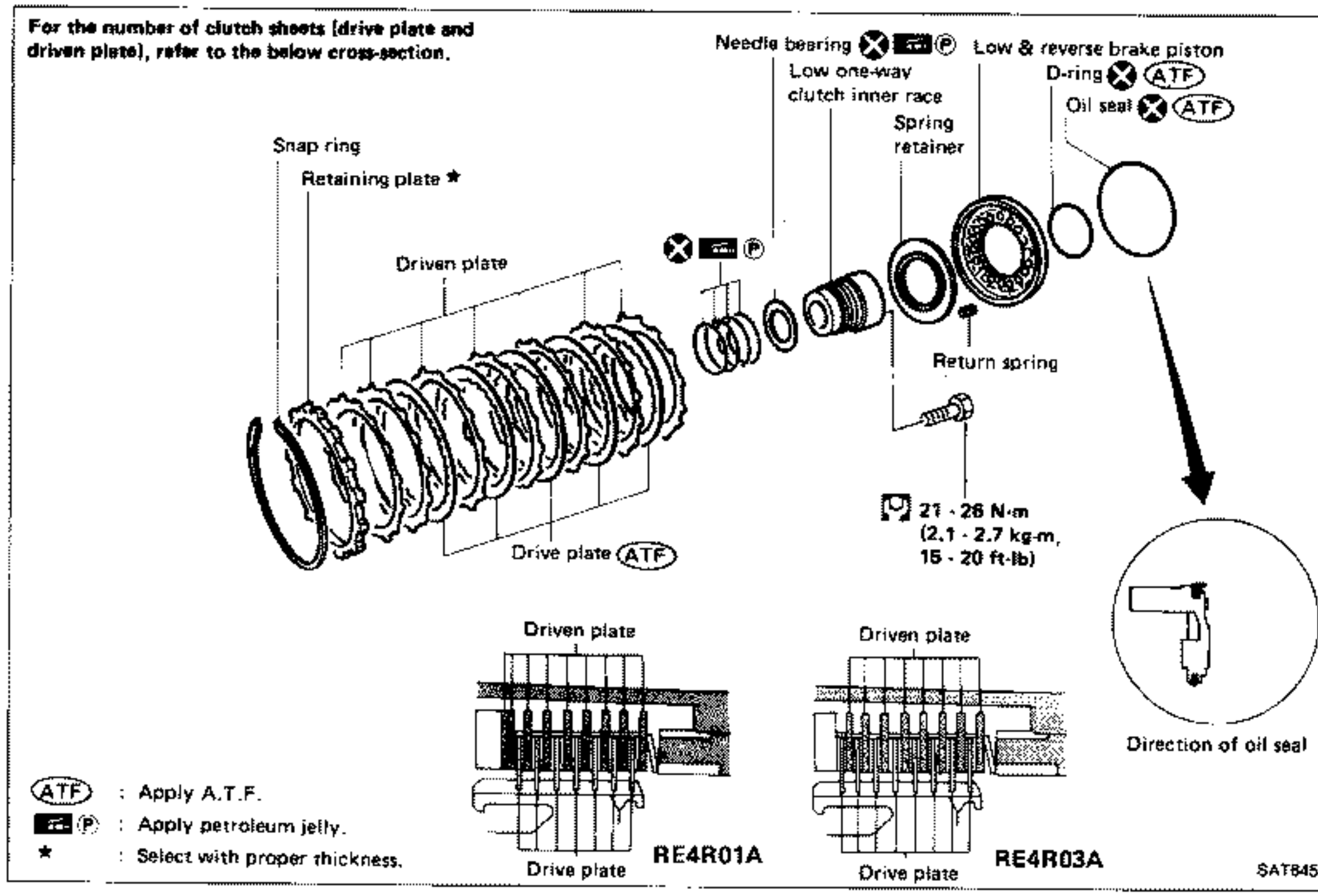

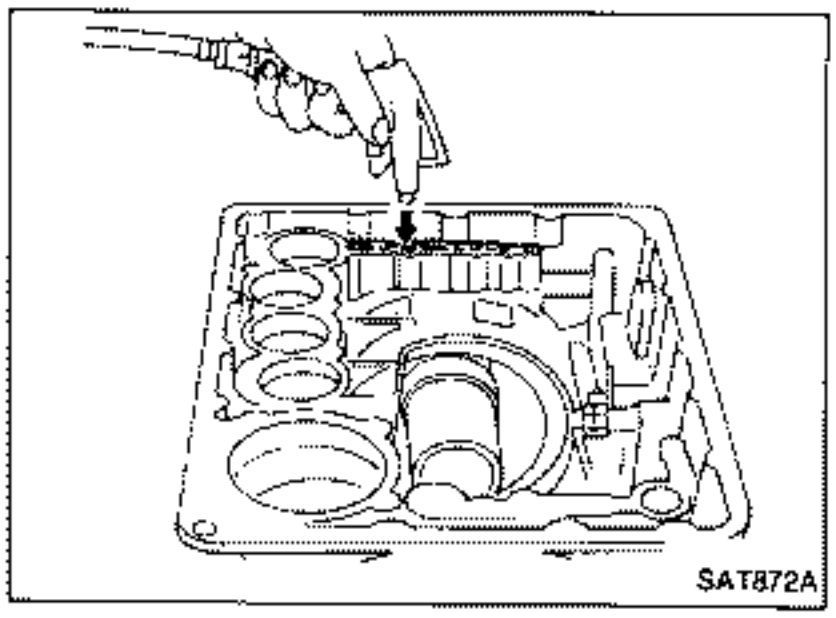

DISASSEMBLY

1. Check operation of low and reverse brake.
a. Install seal ring onto oil pump cover and install reverse clutch. Apply compressed air to oil hole.
b. Check to see that retaining plate moves to snap ring.
c. If retaining plate does not move to snap ring, D-ring or oil seal may be damaged or fluid may be leaking at piston check ball.

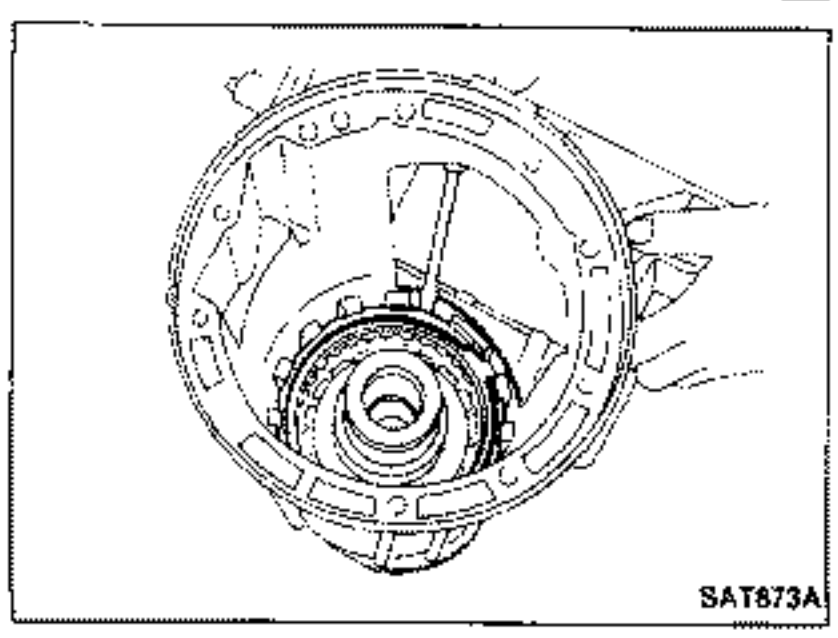

2. Remove snap ring, low and reverse brake drive plates, driven plates and dish plate.

Low & Reverse Brake (Cont'd)

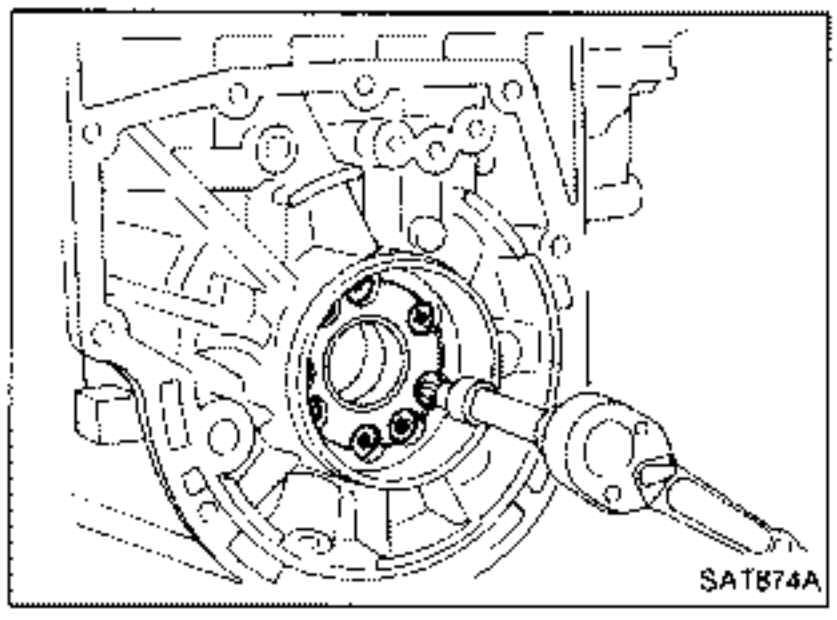
SAT874A

3. Remove low one-way clutch inner race, spring retainer and return spring from transmission case.

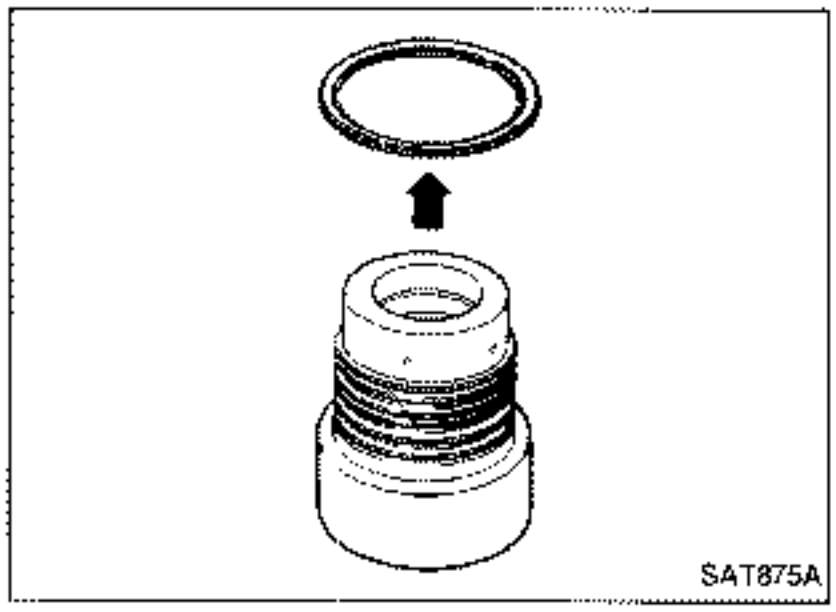
SAT875A

4. Remove seal rings from low one-way clutch inner race.
5. Remove needle bearing from low one-way clutch inner race.

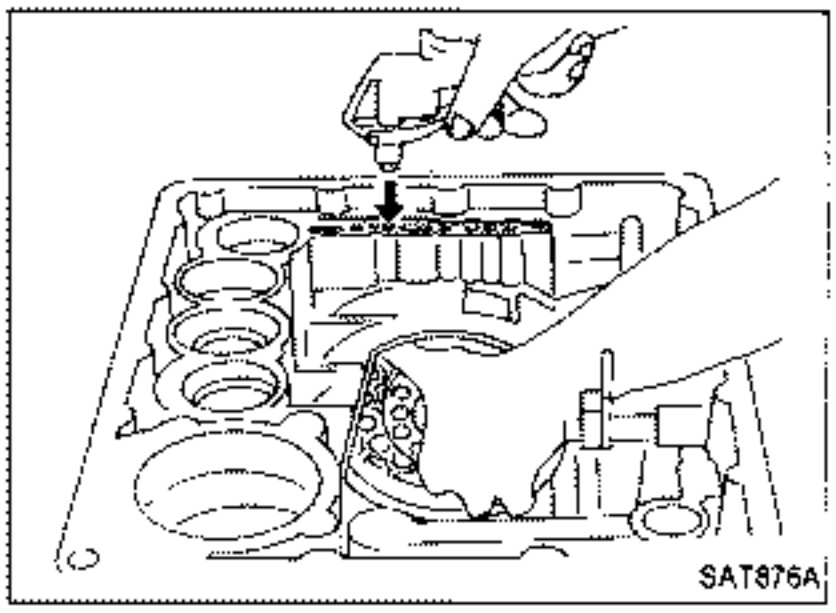
SAT876A

6. Remove low and reverse brake piston using compressed air.
7. Remove oil seal and D-ring from piston.

INSPECTION

Low and reverse brake snap ring and spring retainer

- Check for deformation, or damage.

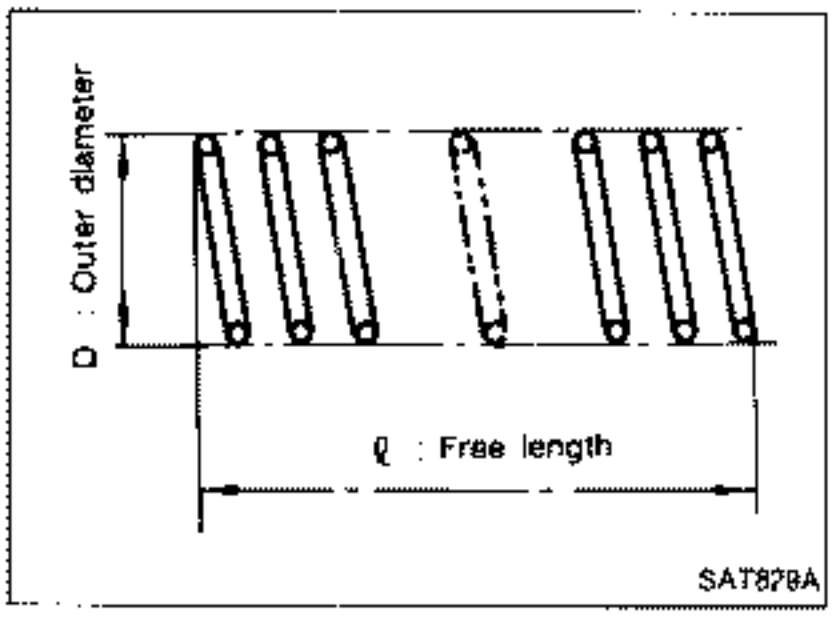

SAT878A

Low and reverse brake return springs

- Check for deformation or damage. Also measure free length and outside diameter.

Inspection standard:

Unit: mm (in)

Model	Part No.	ℓ	D
RE4R01A	31521-21X00	23.7 (0.933)	11.6 (0.457)
RE4R03A	31505-51X00 (Inner)	20.43 (0.8043)	9.4 (0.370)
	31505-51X05 (Outer)	20.35 (0.8012)	11.9 (0.469)

Low & Reverse Brake (Cont'd)

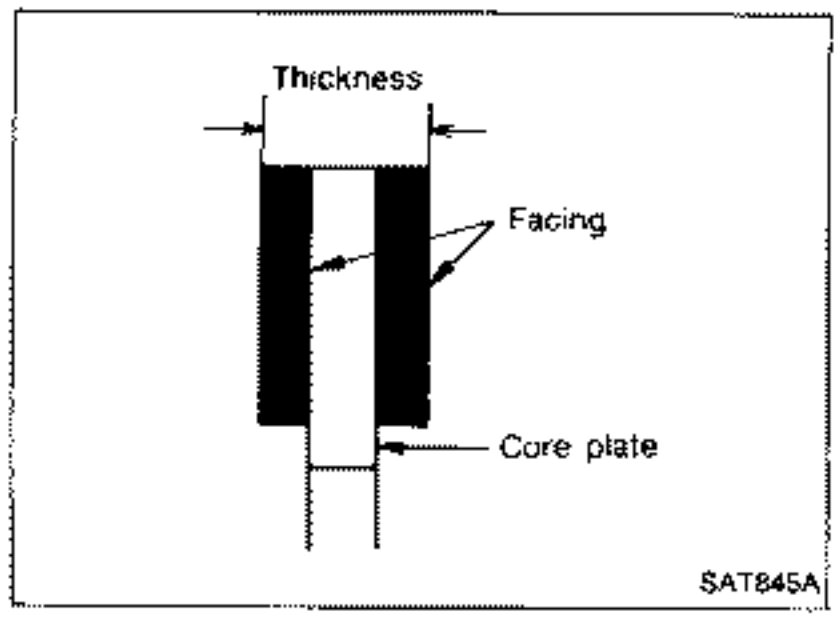

Low and reverse brake drive plates

- Check facing for burns, cracks or damage.
- Measure thickness of facing.

Thickness of drive plate:

Standard value

2.0 mm (0.079 in) (RE4R01A)

1.6 mm (0.063 in) (RE4R03A)

Wear limit

1.8 mm (0.071 in) (RE4R01A)

1.4 mm (0.055 in) (RE4R03A)

- If not within wear limit, replace.

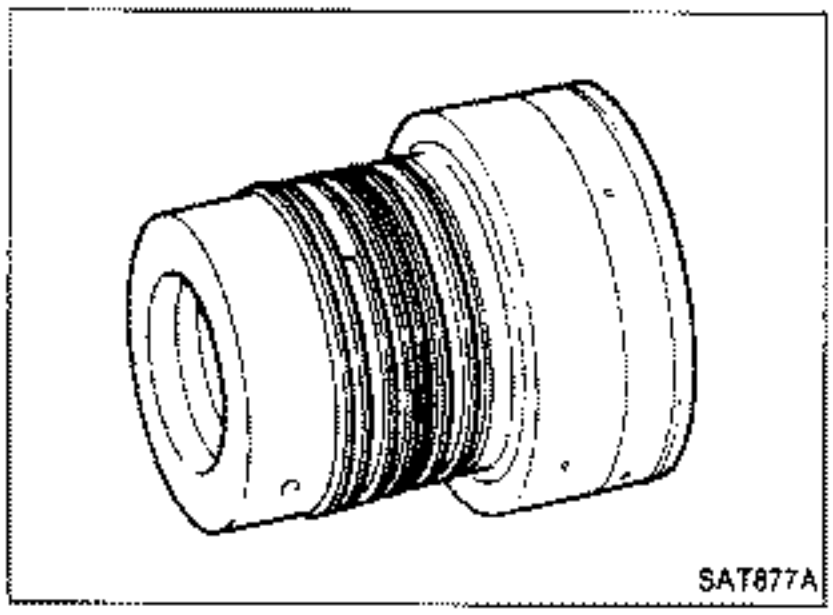

Low one-way clutch inner race

- Check frictional surface of inner race for wear or damage.

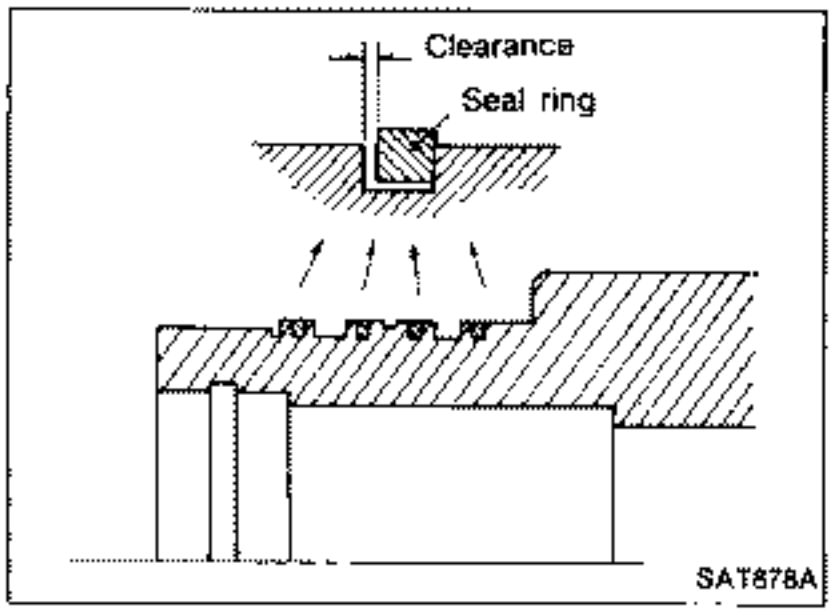

- Install a new seal rings onto low one-way clutch inner race.
- **Be careful not to expand seal ring gap excessively.**
- Measure seal ring-to-groove clearance.

Inspection standard:

Standard value: 0.10 - 0.25 mm (0.0039 - 0.0098 in)

Allowable limit: 0.25 mm (0.0098 in)

- If not within allowable limit, replace low one-way clutch inner race.

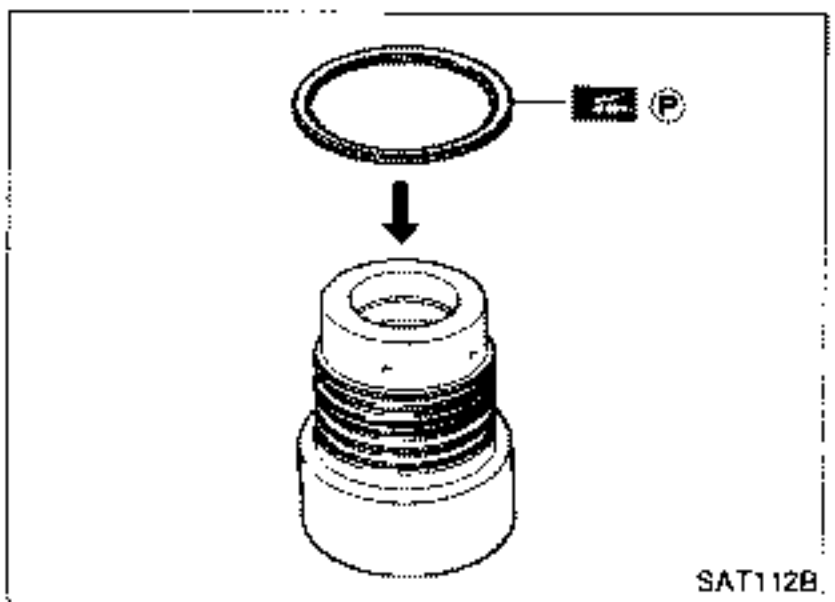

ASSEMBLY

1. Install bearing onto one-way clutch inner race.

- **Pay attention to its direction — Black surface goes to rear side.**
- **Apply petroleum jelly to needle bearing.**

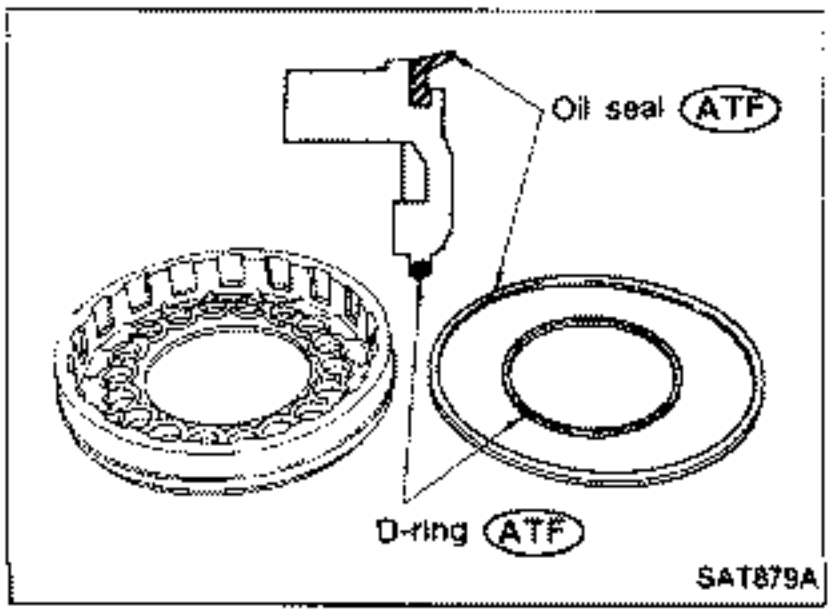

2. Install oil seal and D-ring onto piston.

- **Apply A.T.F. to oil seal and D-ring.**

Low & Reverse Brake (Cont'd)

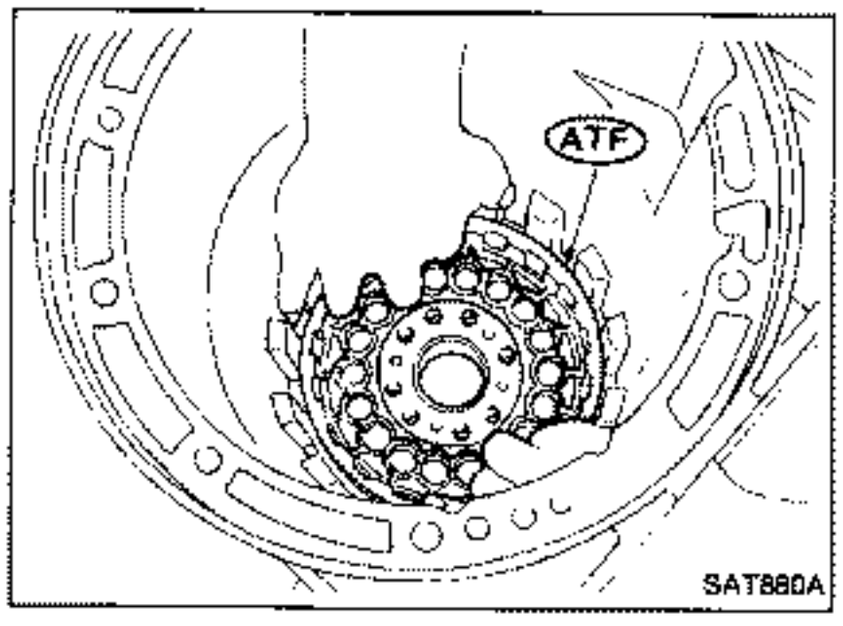

3. Install piston by rotating it slowly and evenly.

- **Apply A.T.F. to inner surface of transmission case.**

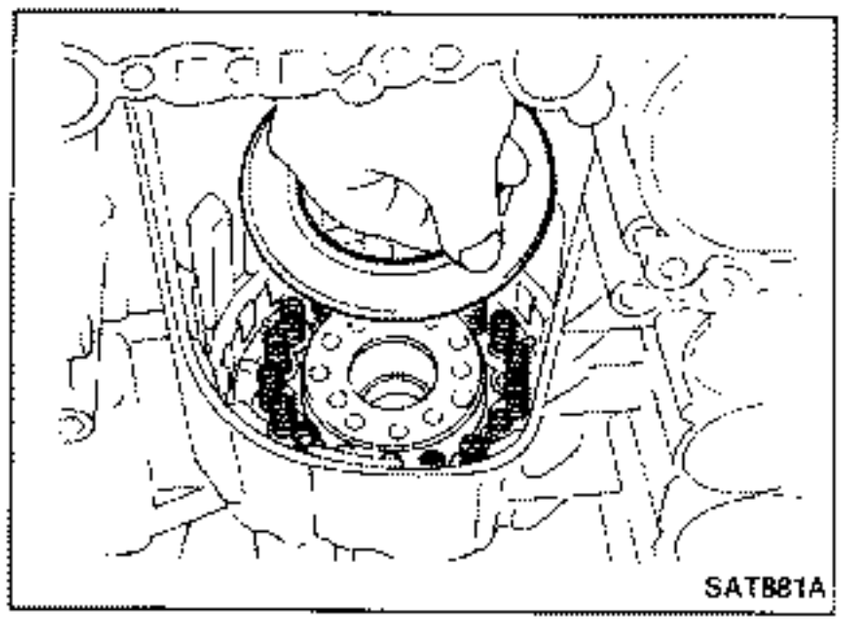

4. Install return springs, spring retainer and low one-way clutch inner race onto transmission case.

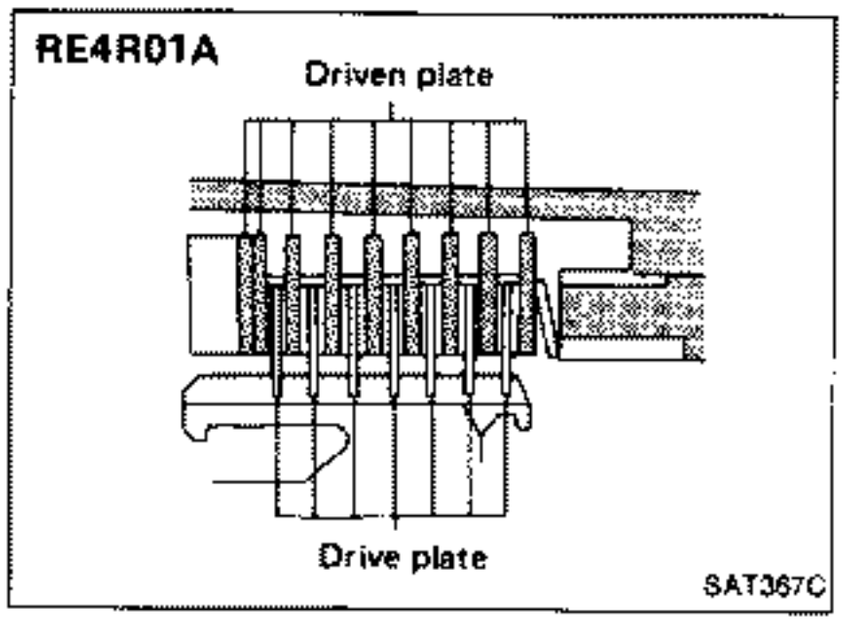

5. Install dish plate, low and reverse brake drive plates, driven plates and retaining plate.

- **Two types of drive plates are used on the RE4R03A transmission. One type uses a "waving" design and the other type uses a "flat" design. Either one can be installed first since they are interchangeable.**

6. Install snap ring on transmission case.

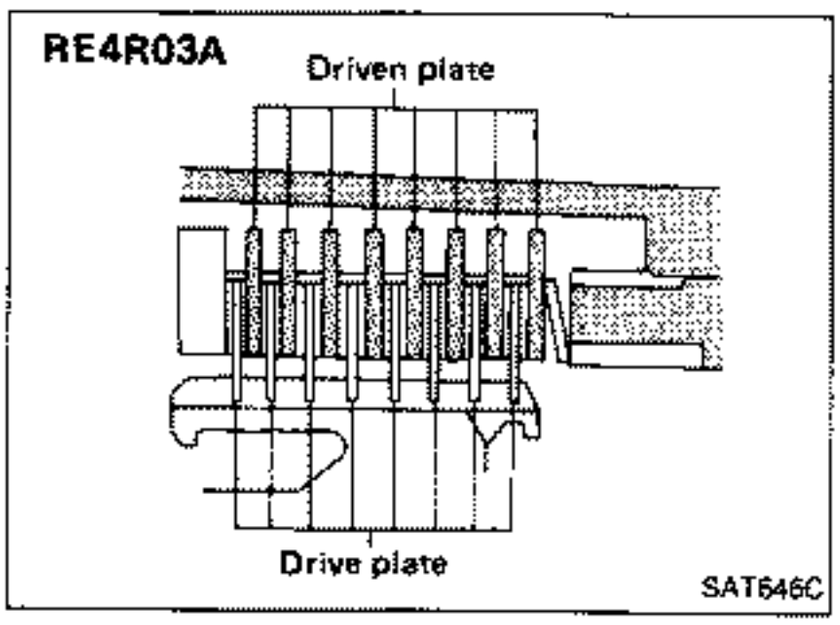

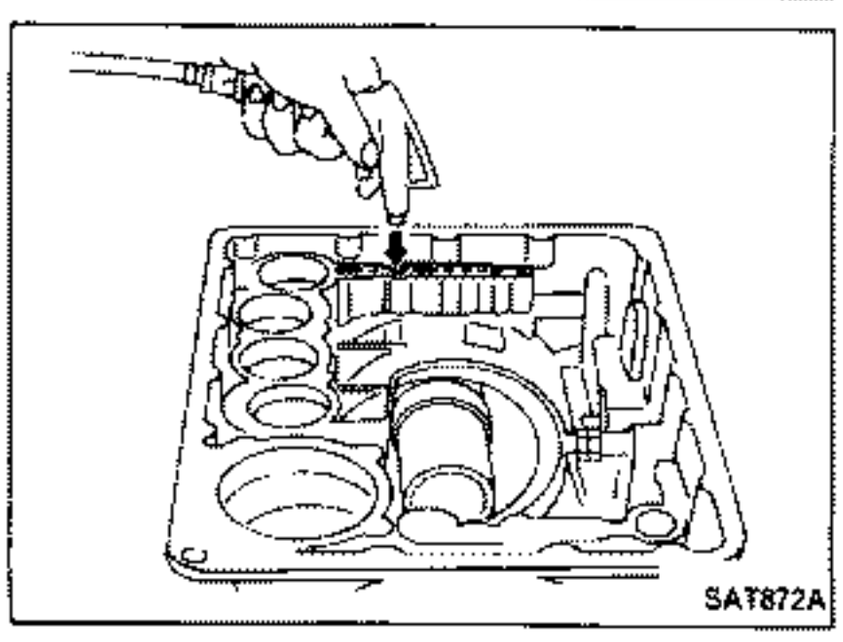

7. Check operation of low and reverse brake clutch piston. Refer to "DISASSEMBLY".

Low & Reverse Brake (Cont'd)

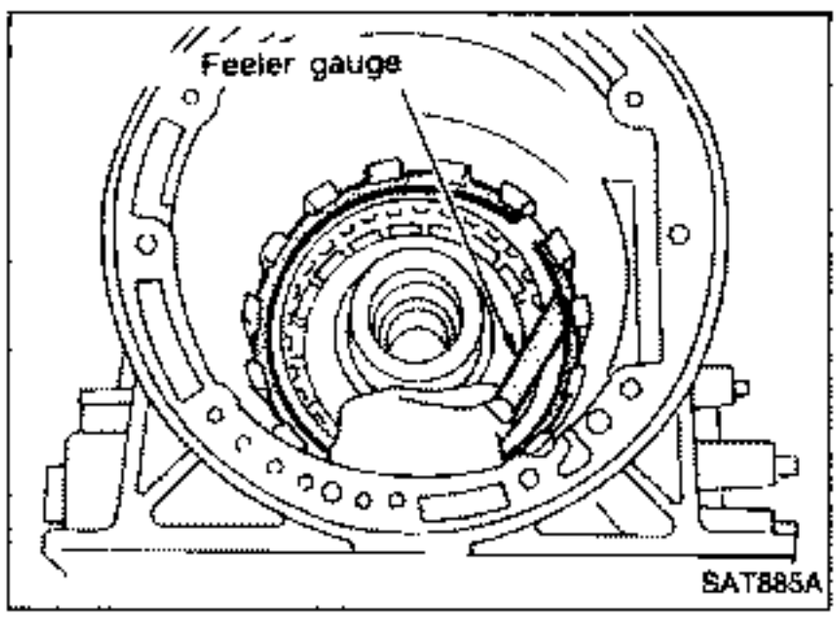

8. Measure clearance between retaining plate and snap ring. If not within allowable limit, select proper retaining plate.

Specified clearance:

Standard

1.1 - 1.5 mm (0.043 - 0.059 in)

Allowable limit

2.9 mm (0.114 in)

Retaining plate:

Refer to S.D.S.

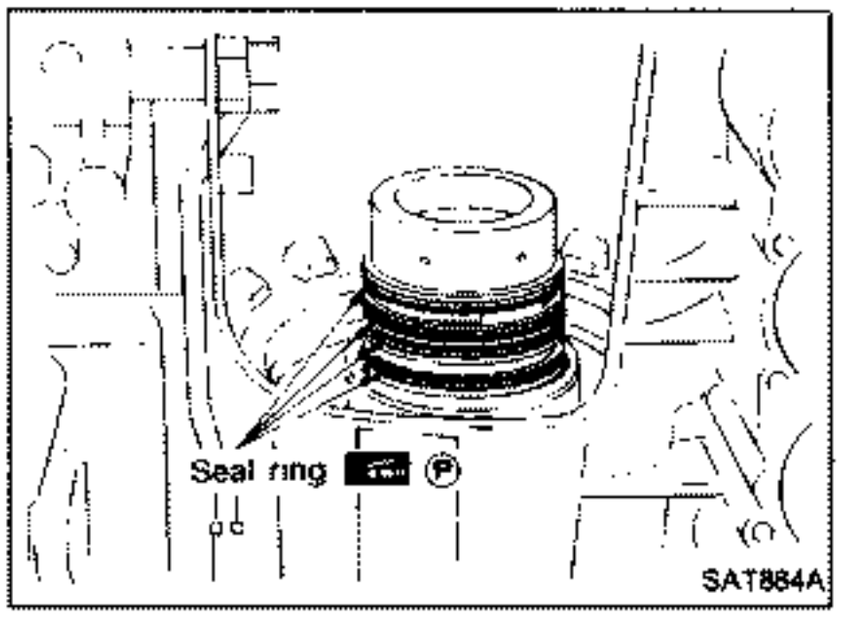

9. Install low one-way clutch inner race seal ring.

- **Apply petroleum jelly to seal ring.**
- **Make sure seal rings are pressed firmly into place and held by petroleum jelly.**

Forward Clutch Drum Assembly — RE4R01A

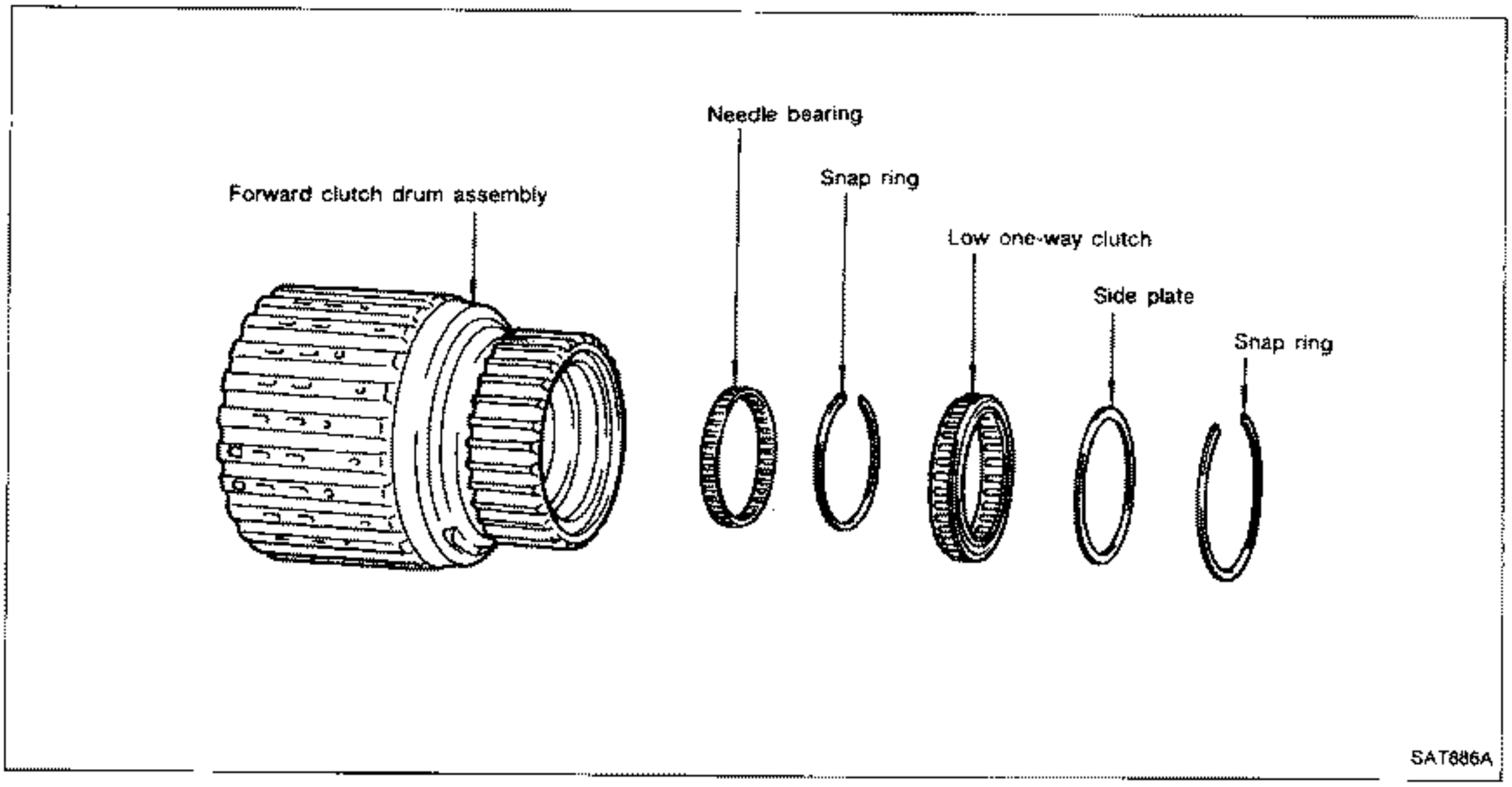

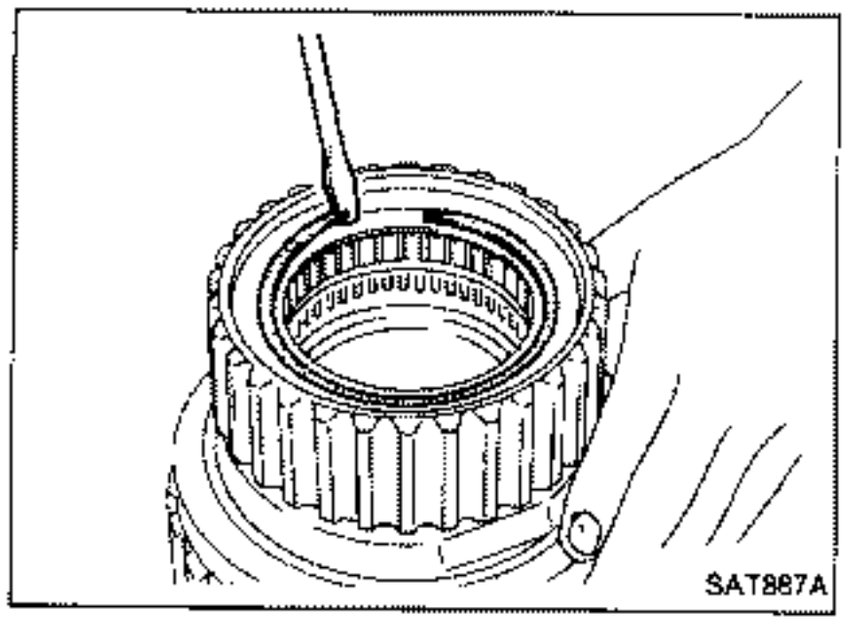

DISASSEMBLY

1. Remove snap ring from forward clutch drum.

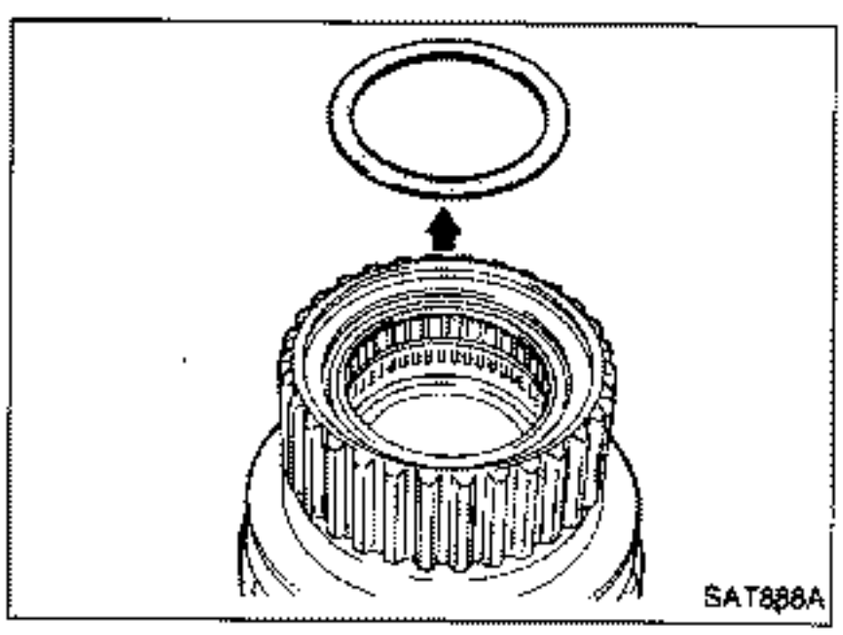

2. Remove side plate from forward clutch drum.

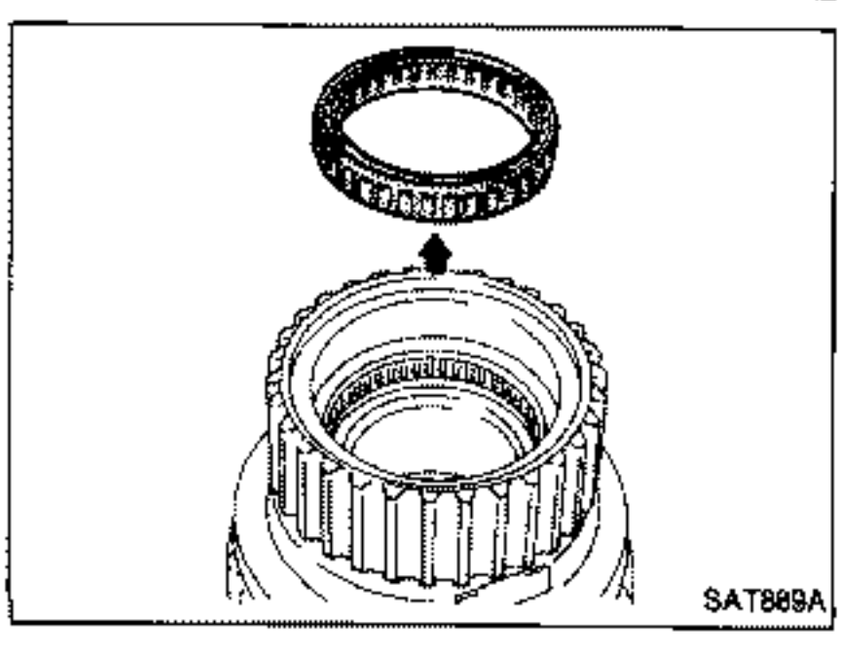

3. Remove low one-way clutch from forward clutch drum.

Forward Clutch Drum Assembly — RE4R01A (Cont'd)

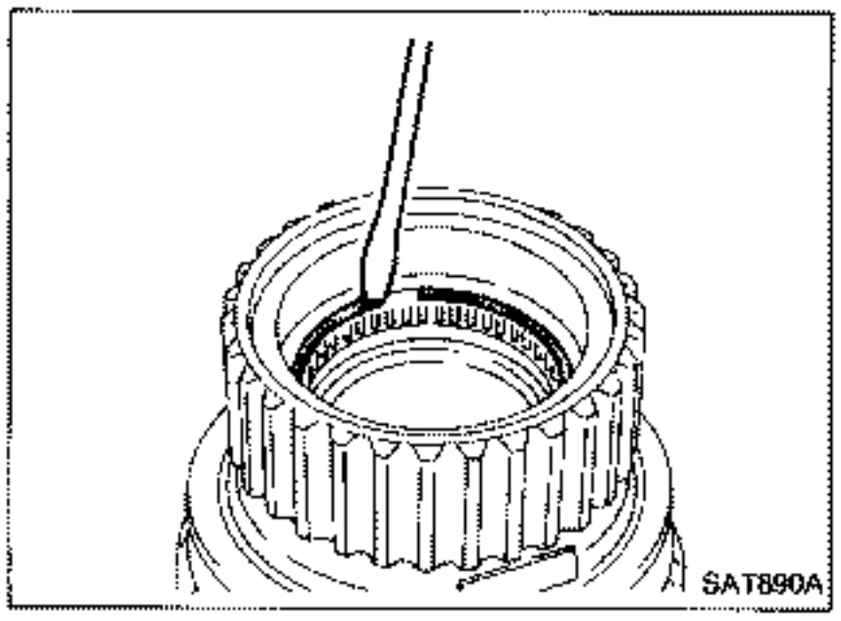

4. Remove snap ring from forward clutch drum.

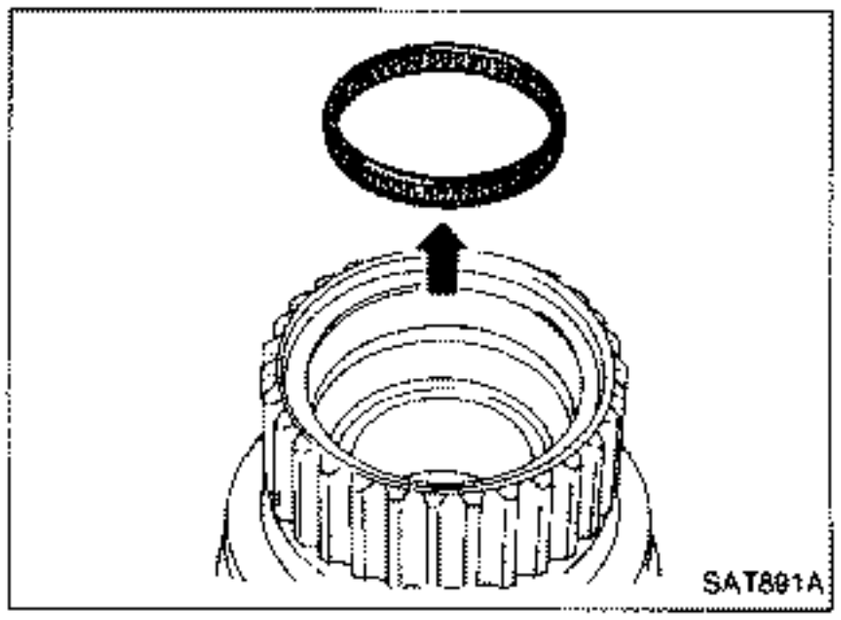

5. Remove needle bearing from forward clutch drum.

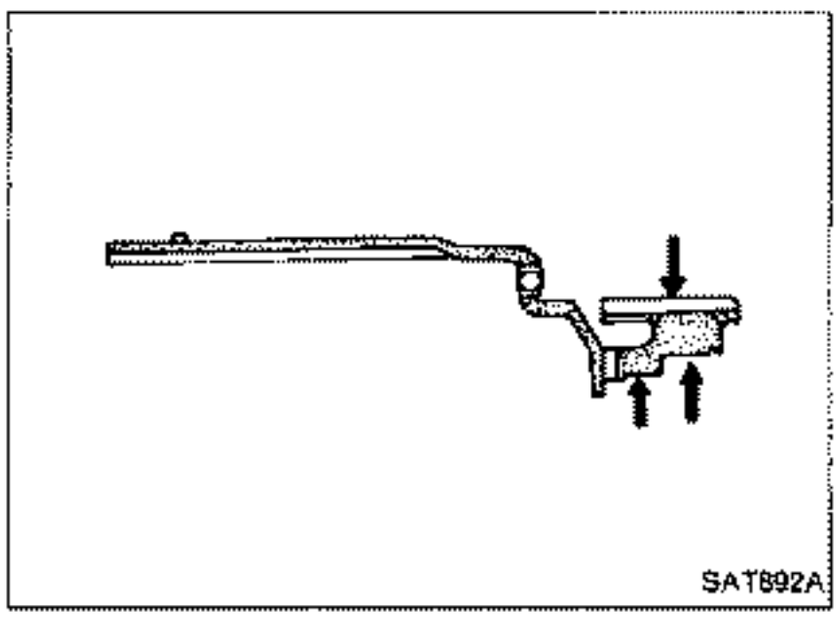

INSPECTION

Forward clutch drum

- Check spline portion for wear or damage.
- Check frictional surfaces of low one-way clutch and needle bearing for wear or damage.

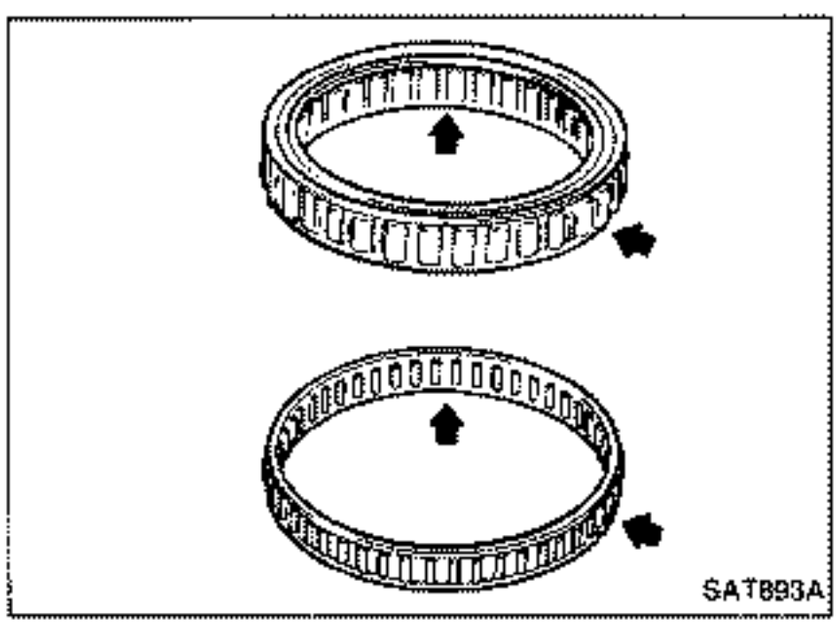

Needle bearing and low one-way clutch

- Check frictional surface for wear or damage.

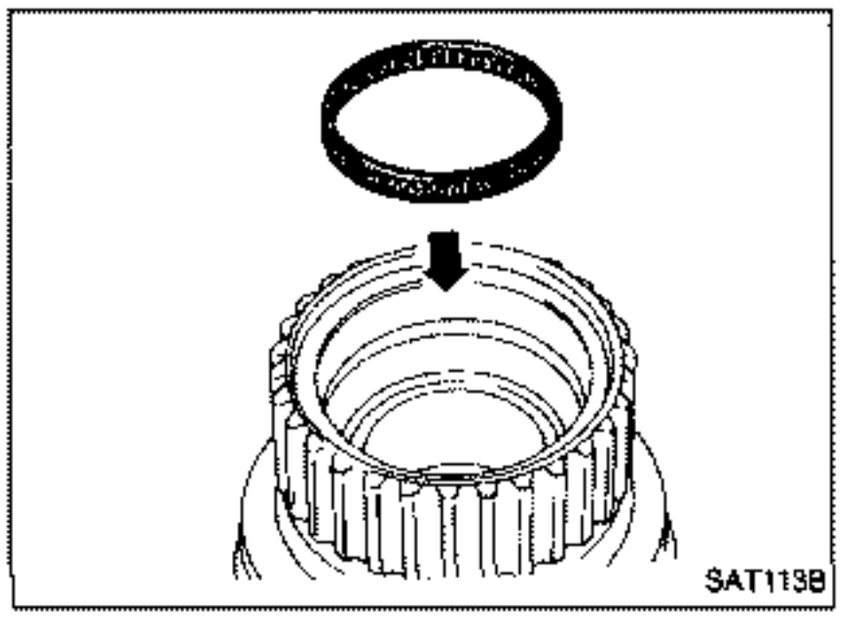

ASSEMBLY

1. Install needle bearing in forward clutch drum.

Forward Clutch Drum Assembly — RE4R01A (Cont'd)

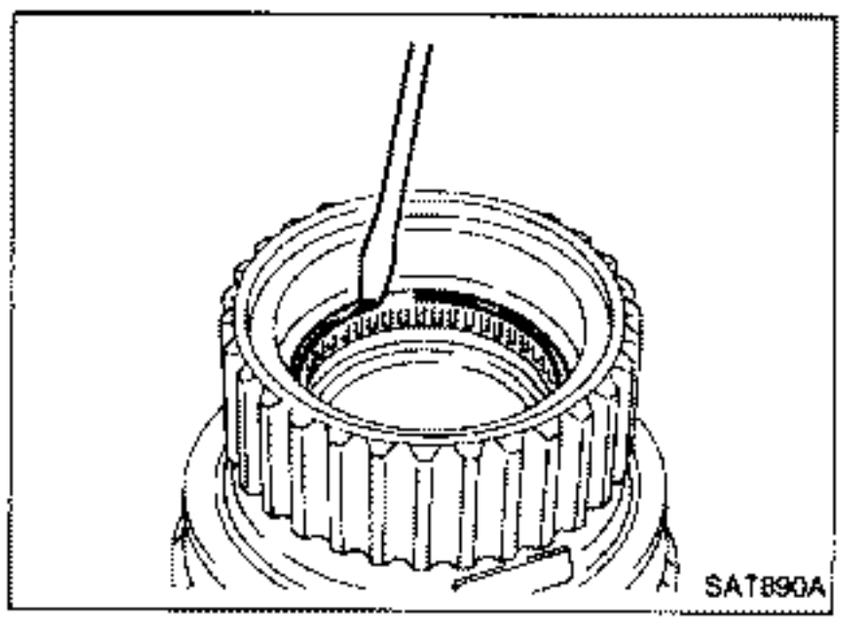

2. Install snap ring onto forward clutch drum.

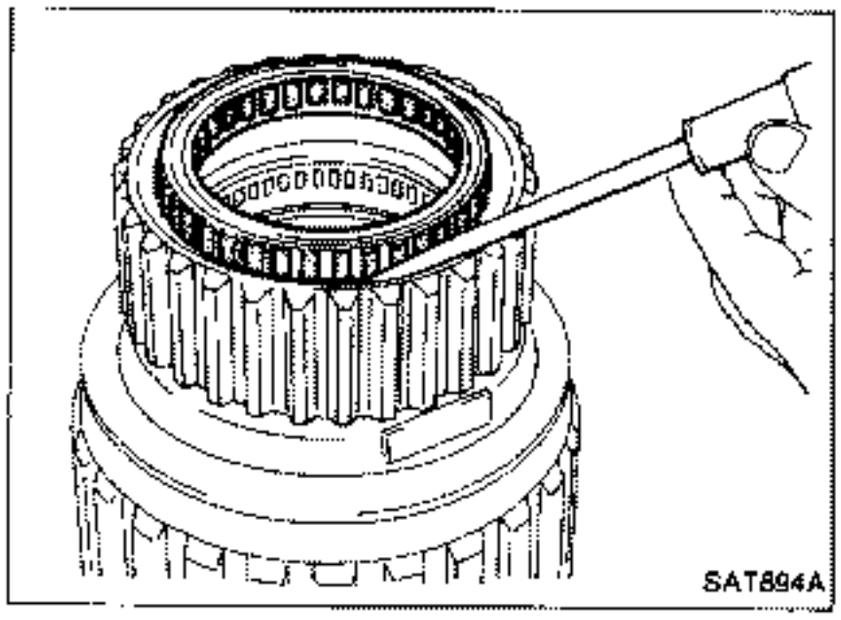

3. Install low one-way clutch onto forward clutch drum by pushing the roller in evenly.

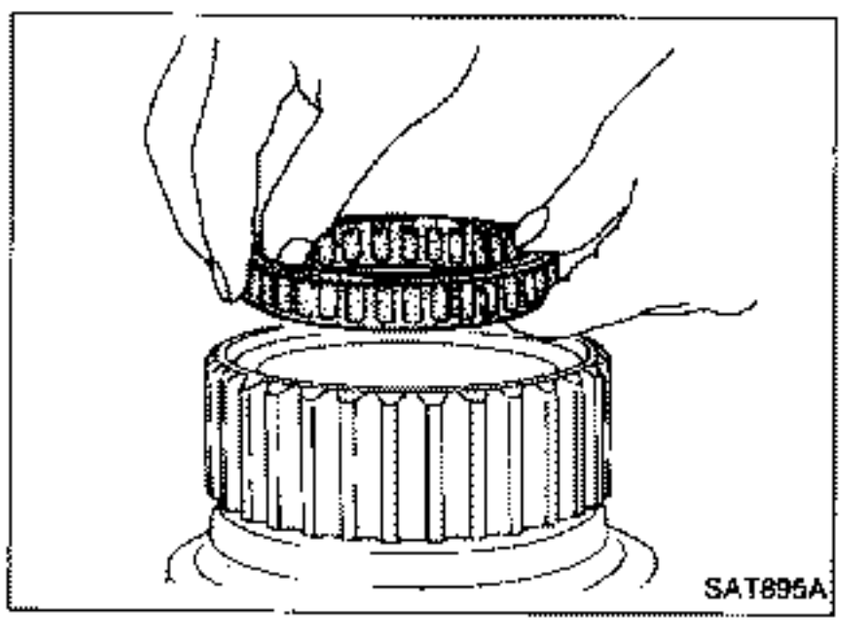

- **Install low one-way clutch with flange facing rearward.**

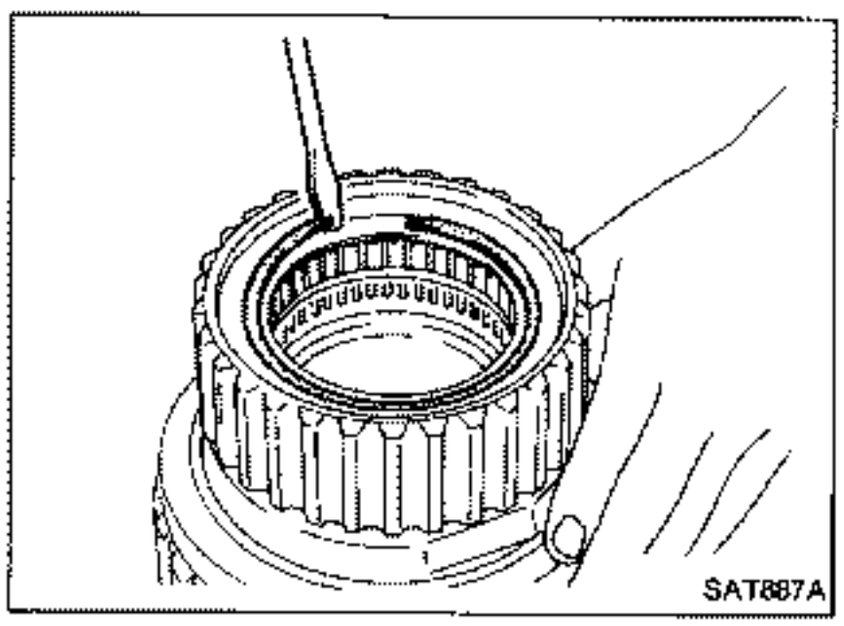

4. Install side plate onto forward clutch drum.
5. Install snap ring onto forward clutch drum.

Forward Clutch Drum Assembly — RE4R03A

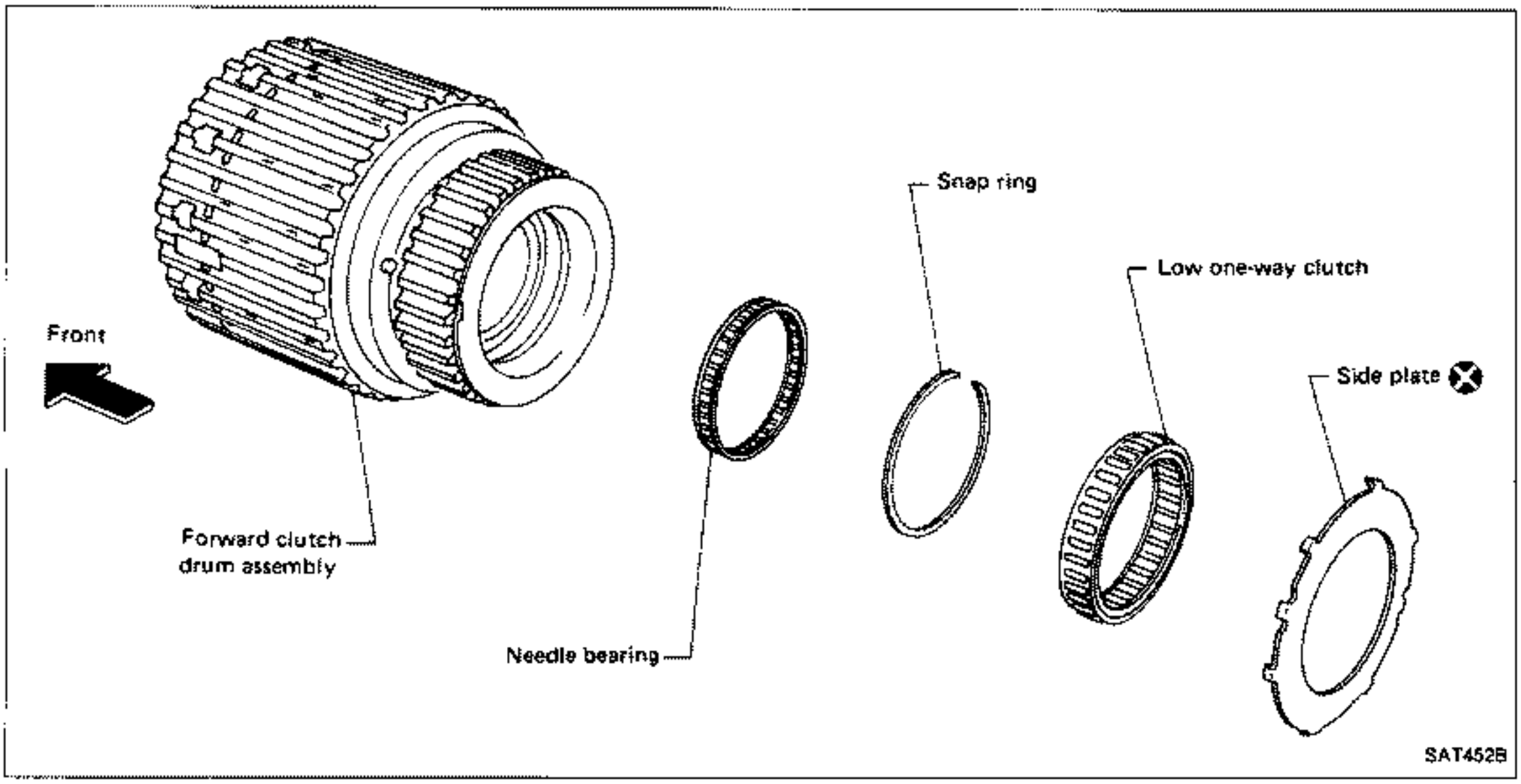

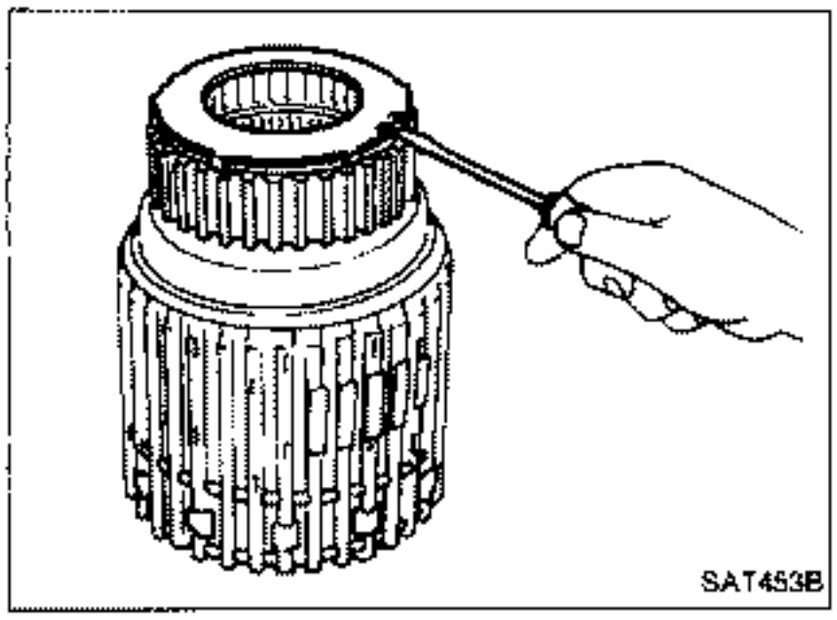

DISASSEMBLY

1. Remove side plate from forward clutch drum.

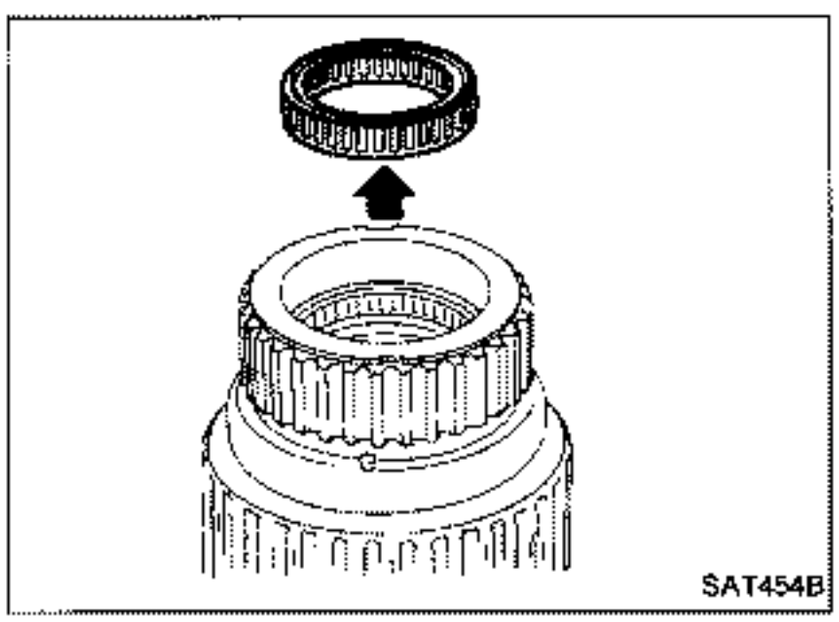

2. Remove low one-way clutch from forward clutch drum.

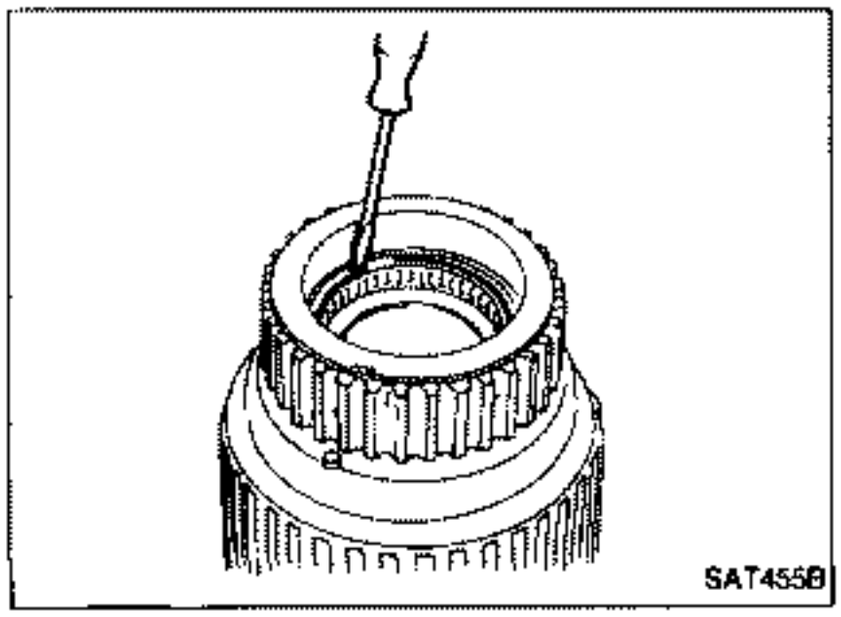

3. Remove snap ring from forward clutch drum.

Forward Clutch Drum Assembly — RE4R03A (Cont'd)

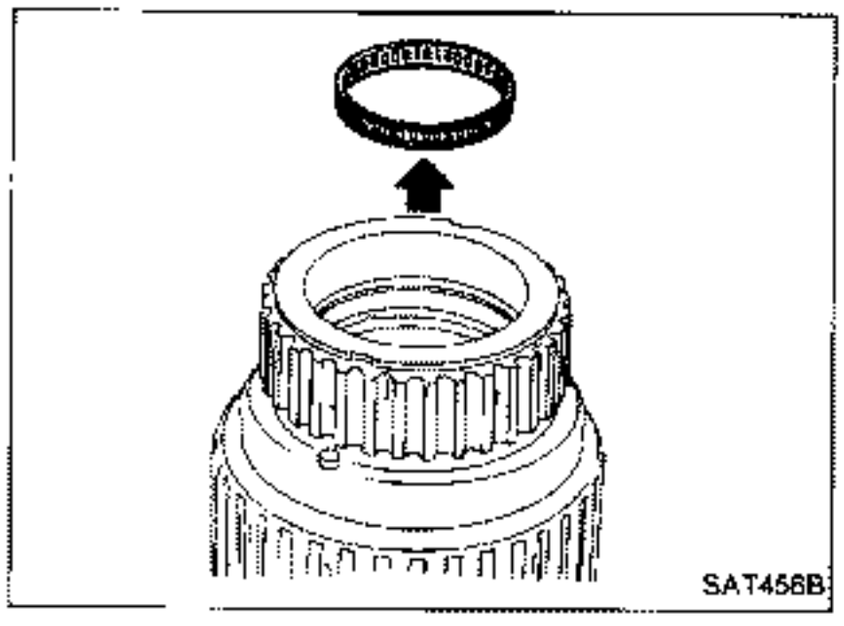

4. Remove needle bearing from forward clutch drum.

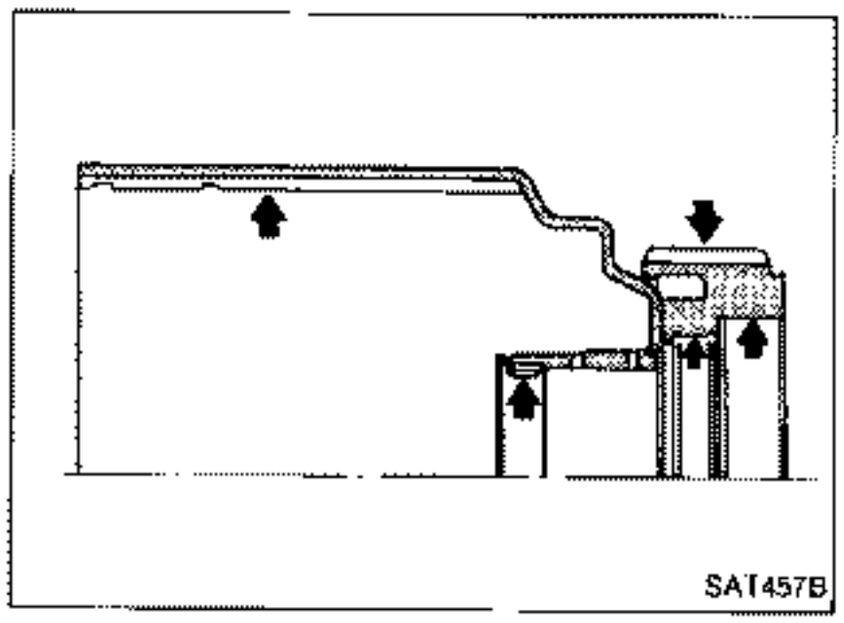

INSPECTION

Forward clutch drum

- Check spline portion for wear or damage.
- Check frictional surfaces of low one-way clutch and needle bearing for wear or damage.

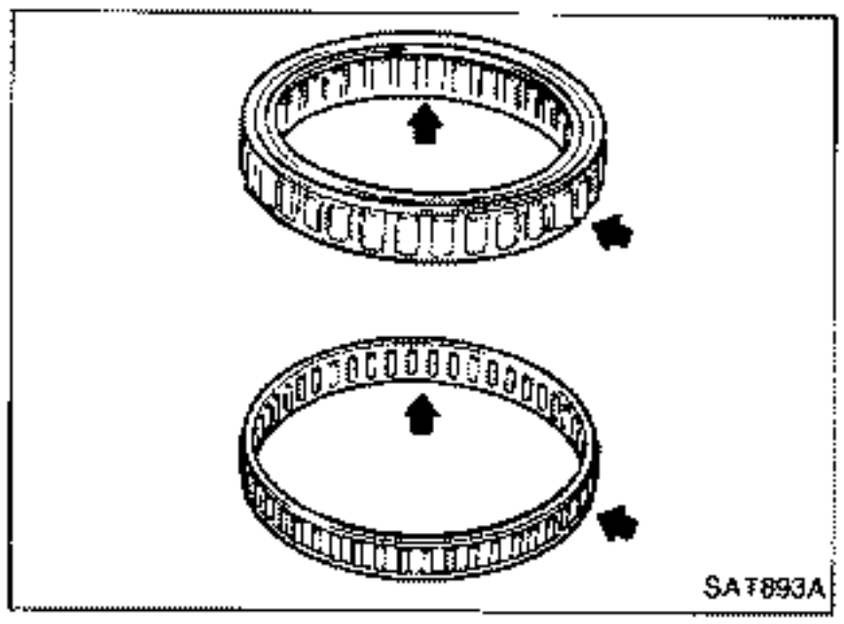

Needle bearing and low one-way clutch

- Check frictional surface for wear or damage.

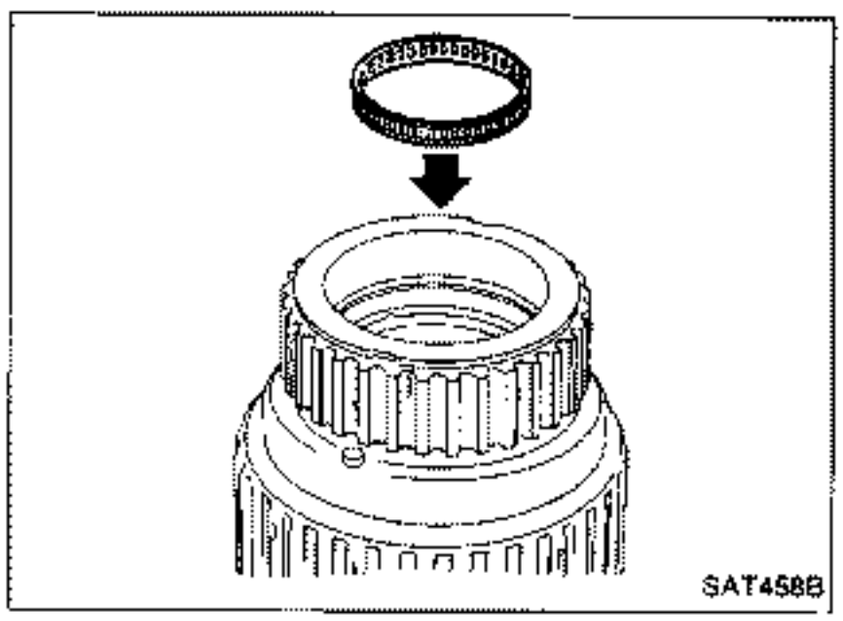

ASSEMBLY

1. Install needle bearing in forward clutch drum.

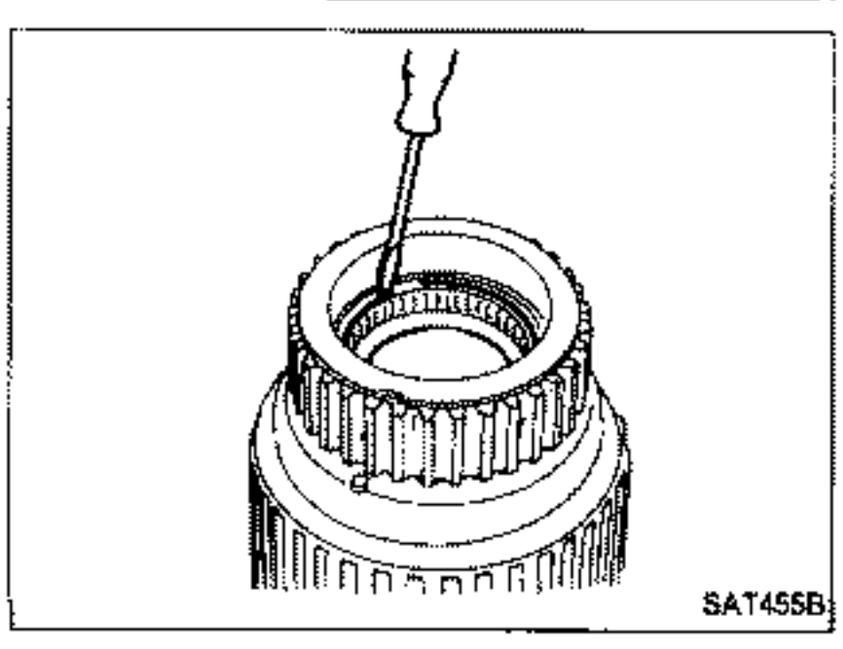

2. Install snap ring onto forward clutch drum.

Forward Clutch Drum Assembly — RE4R03A (Cont'd)

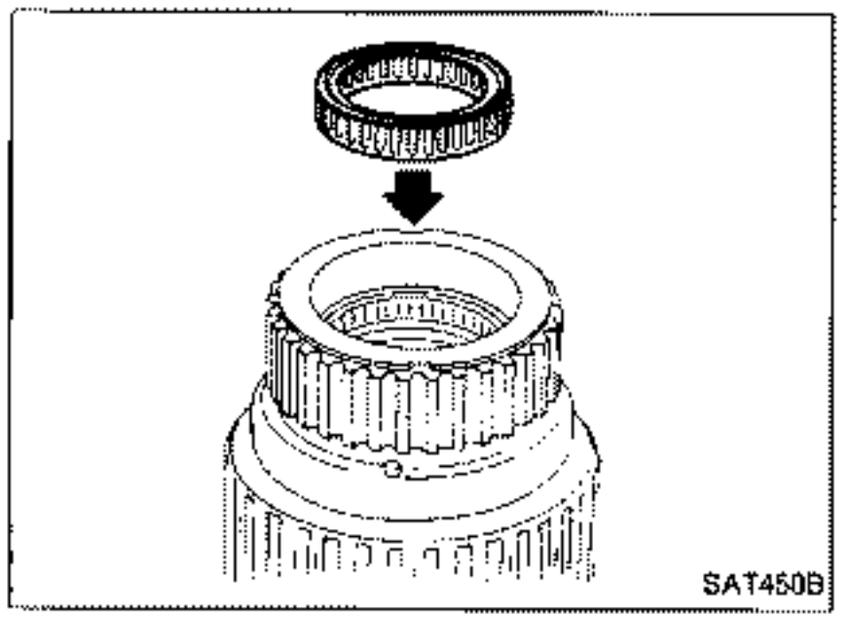
SAT450B

3. Install low one-way clutch onto forward clutch drum by pushing the roller in evenly.

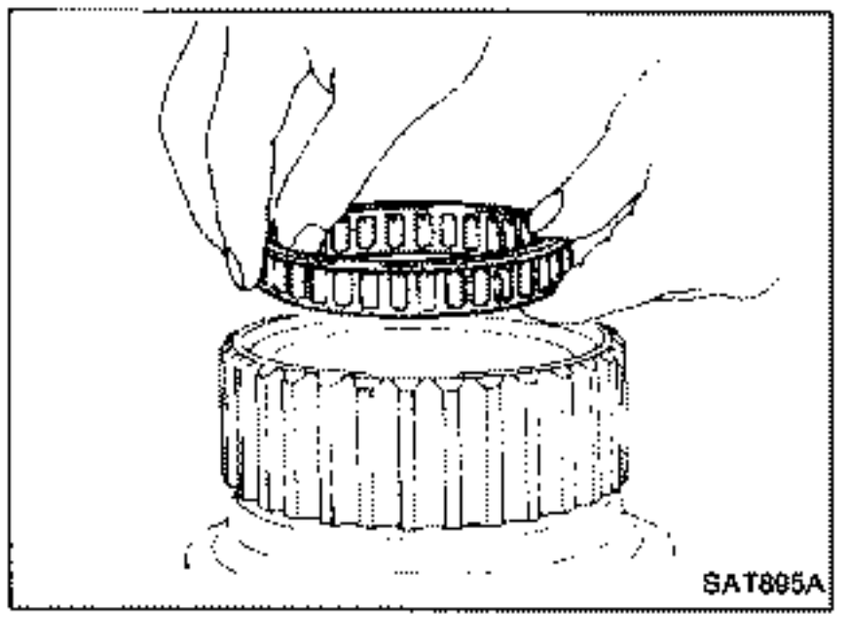
SAT895A

- **Install low one-way clutch with flange facing rearward.**

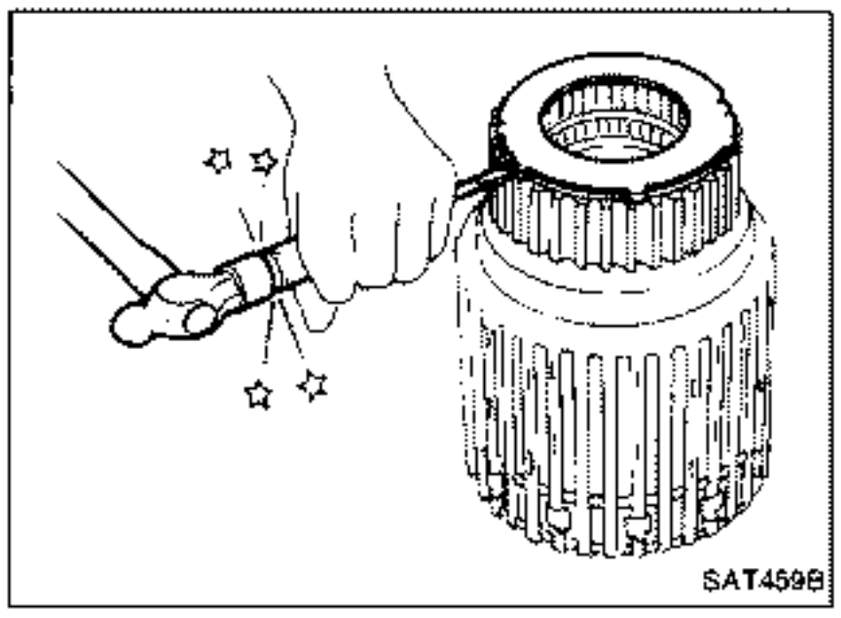
SAT459B

4. Install side plate onto forward clutch drum.

Rear Internal Gear and Forward Clutch Hub

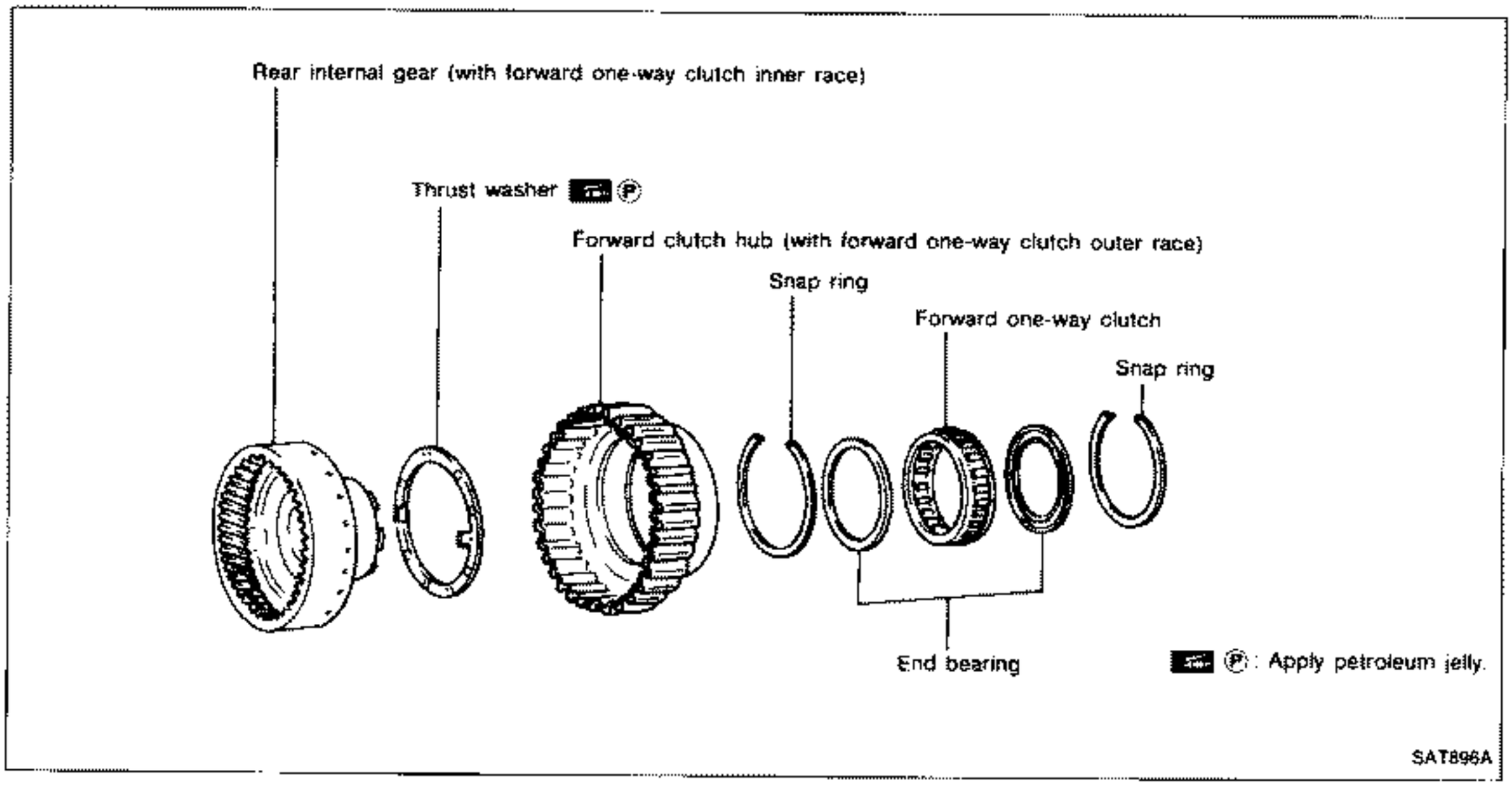

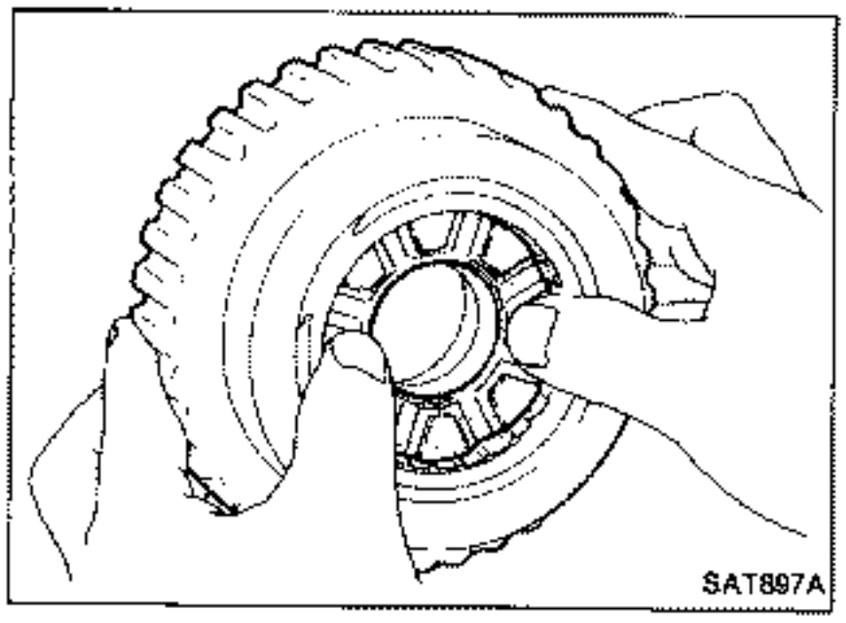
SAT897A

DISASSEMBLY

1. Remove rear internal gear by pushing forward clutch hub forward.

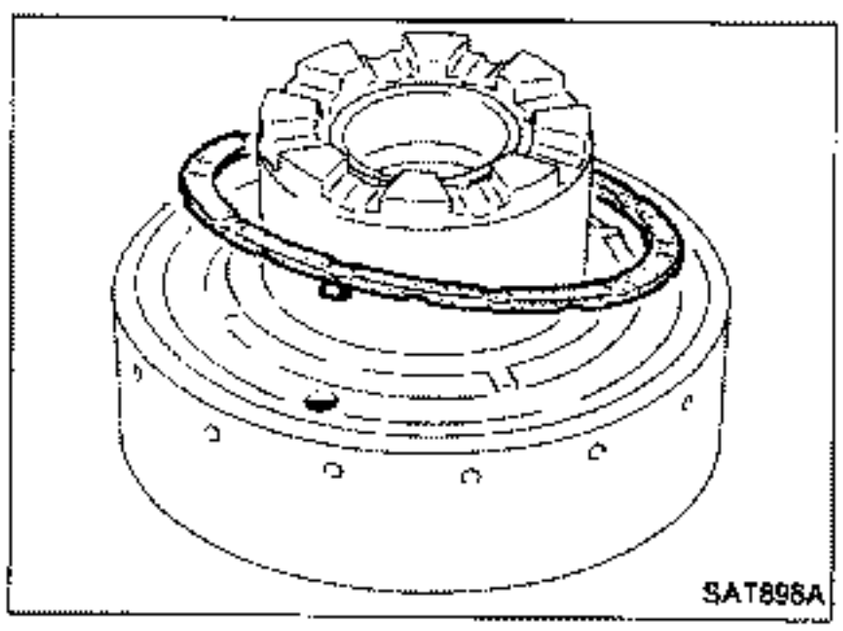
SAT898A

2. Remove thrust washer from rear internal gear.

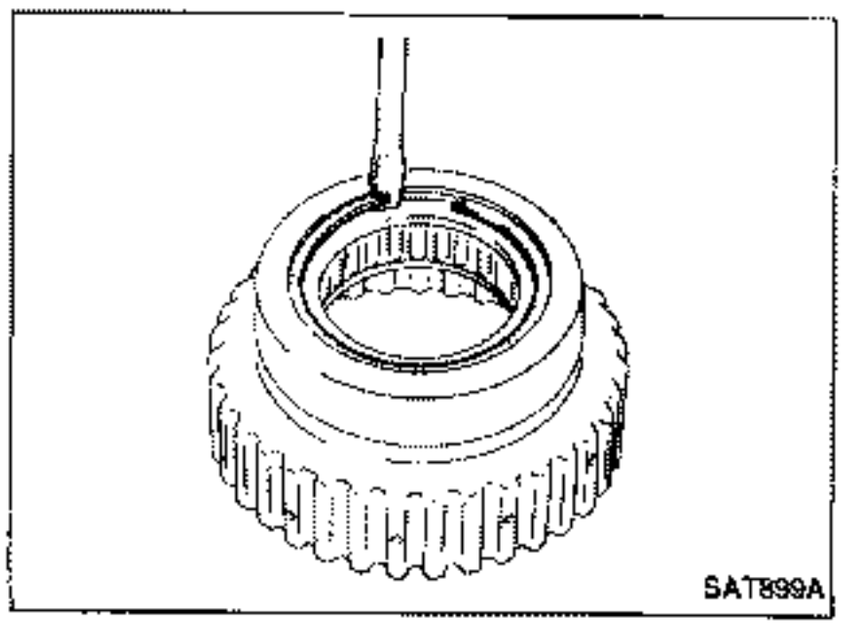
SAT899A

3. Remove snap ring from forward clutch hub.

Rear Internal Gear and Forward Clutch Hub (Cont'd)

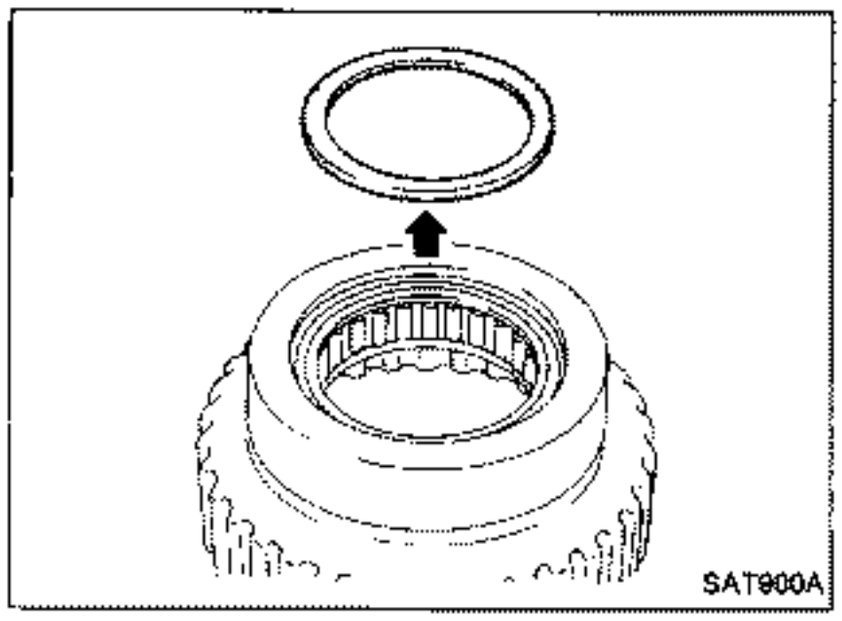

4. Remove end bearing.

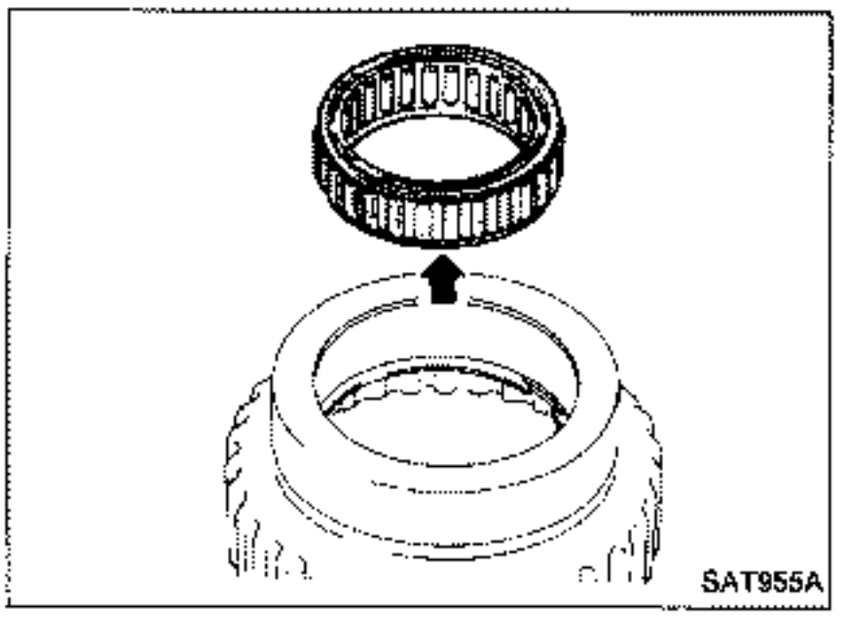

5. Remove forward one-way clutch and end bearing as a unit from forward clutch hub.

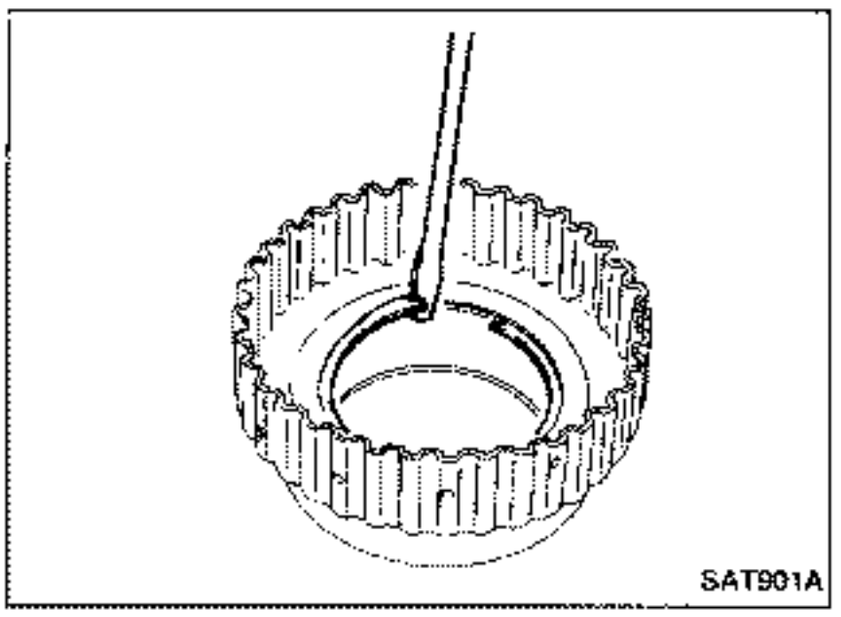

6. Remove snap ring from forward clutch hub.

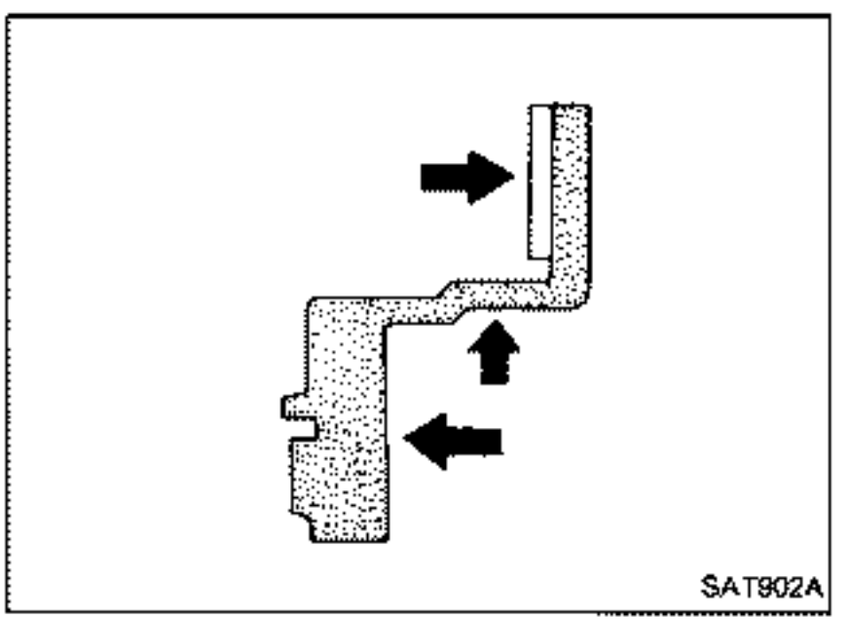

INSPECTION

Rear internal gear and forward clutch hub

- Check gear for excessive wear, chips or cracks.
- Check frictional surfaces of forward one-way clutch and thrust washer for wear or damage.
- Check spline for wear or damage.

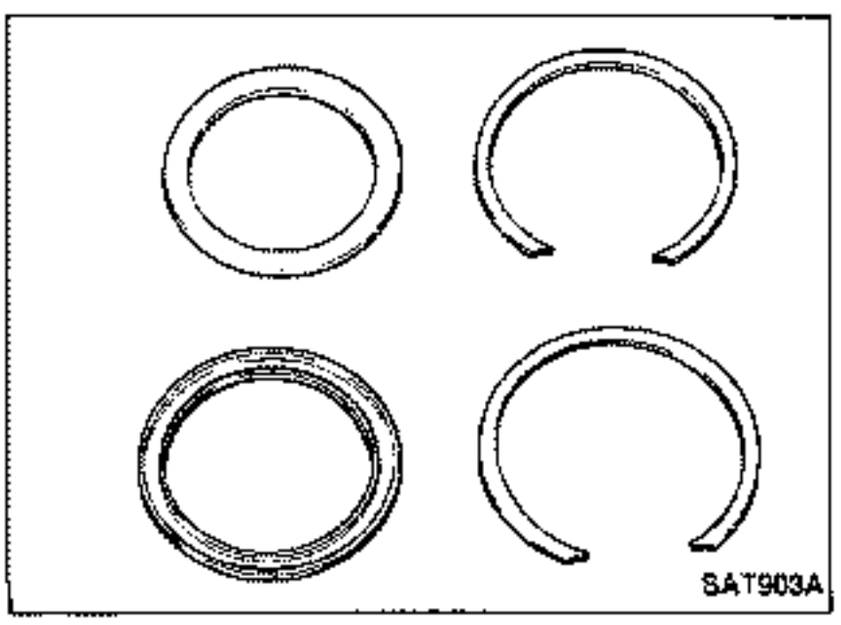

Snap ring and end bearing

- Check for deformation or damage.

Rear Internal Gear and Forward Clutch Hub (Cont'd)

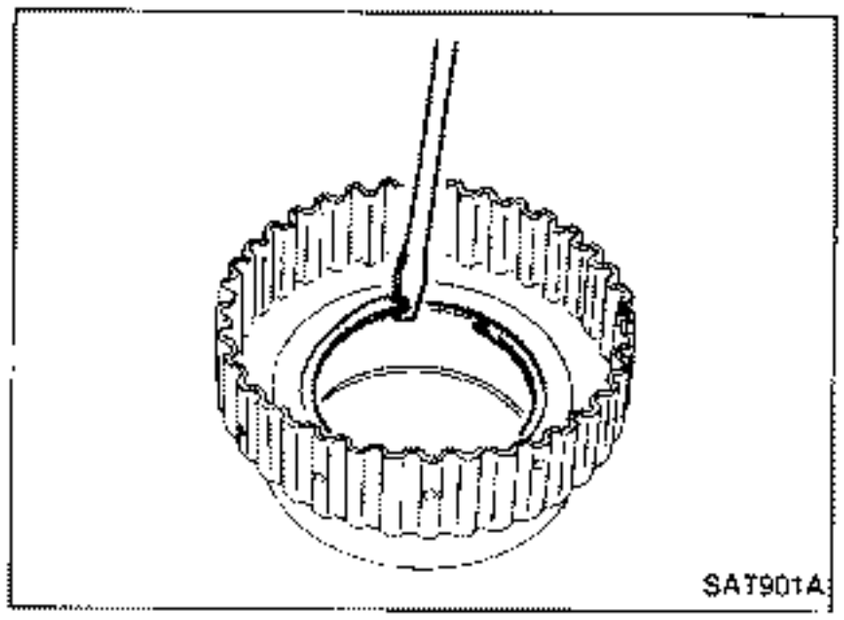

ASSEMBLY

1. Install snap ring onto forward clutch hub.
2. Install end bearing.

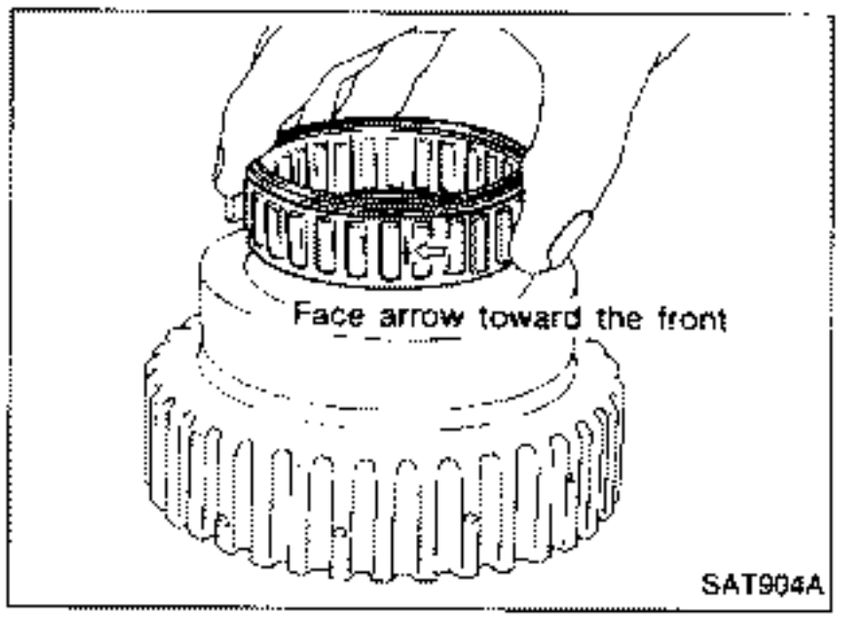

3. Install forward one-way clutch onto clutch hub.

- **Install forward one-way clutch with flange facing rearward.**

4. Install end bearing.
5. Install snap ring onto forward clutch hub.

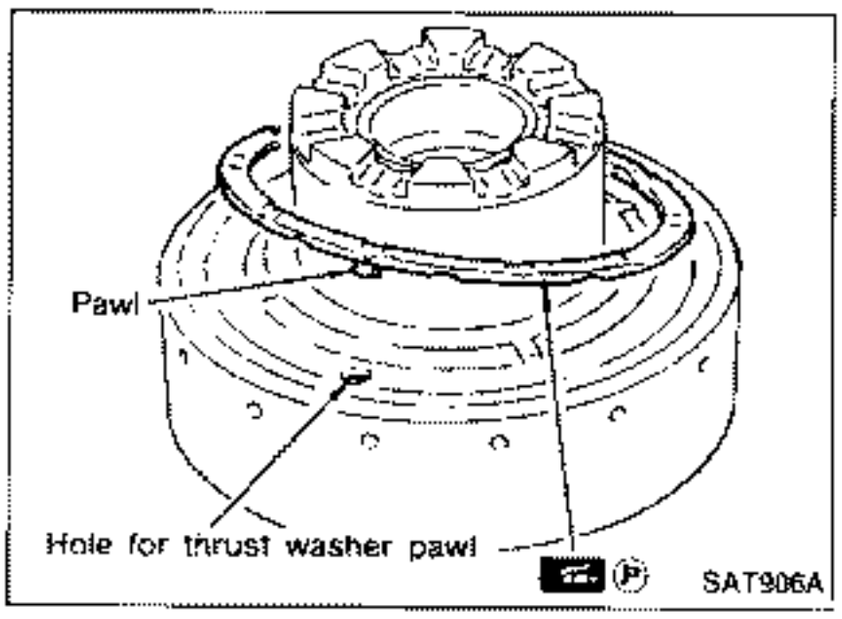

6. Install thrust washer onto rear internal gear.

- **Apply petroleum jelly to thrust washer.**
- **Securely insert pawls of thrust washer into holes in rear internal gear.**

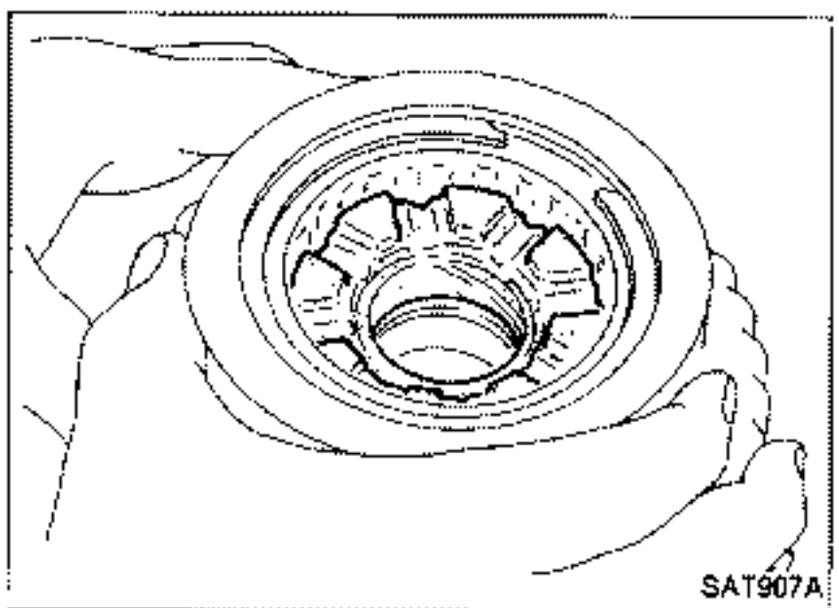

7. Position forward clutch hub in rear internal gear.

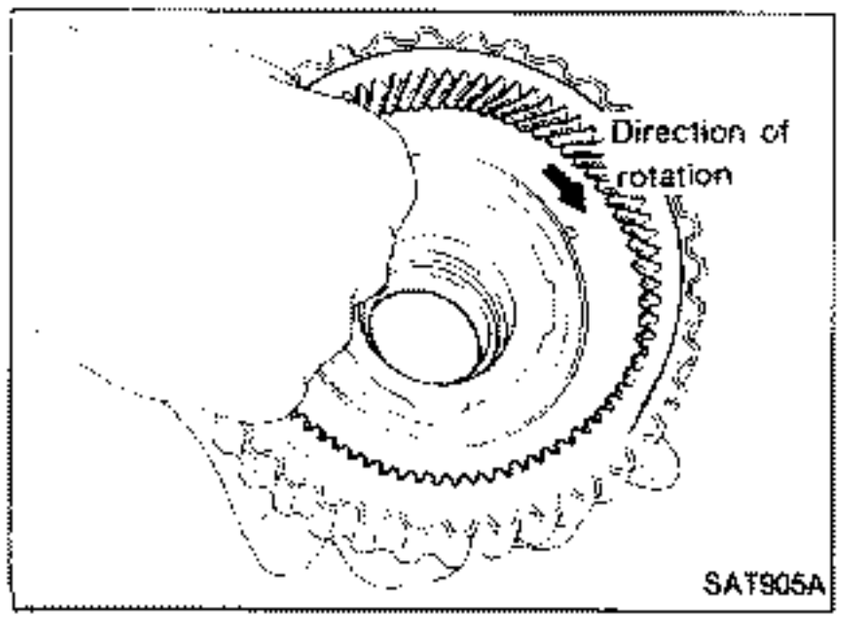

8. After installing, check to assure that forward clutch hub rotates clockwise.

Band Servo Piston Assembly

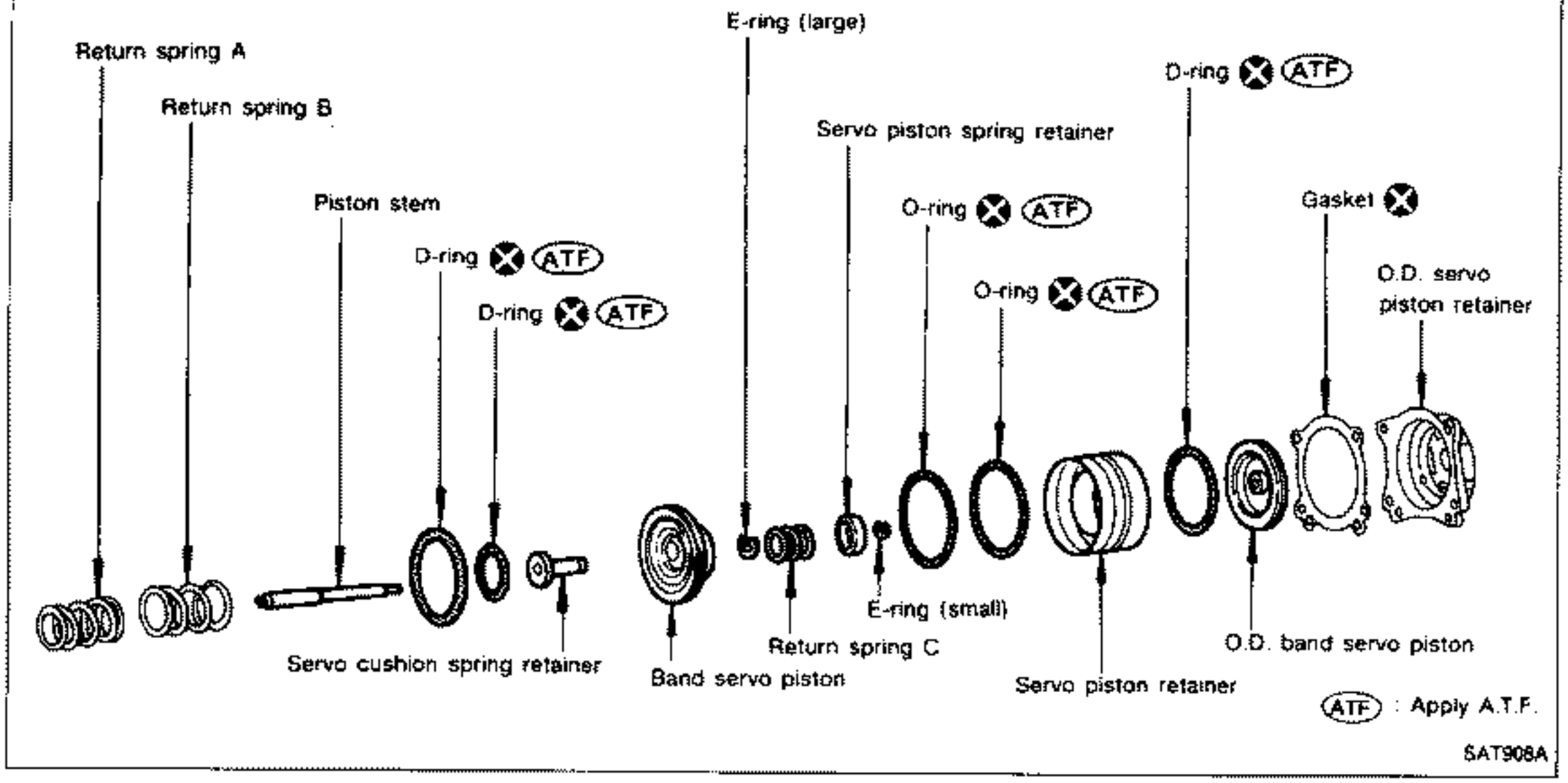

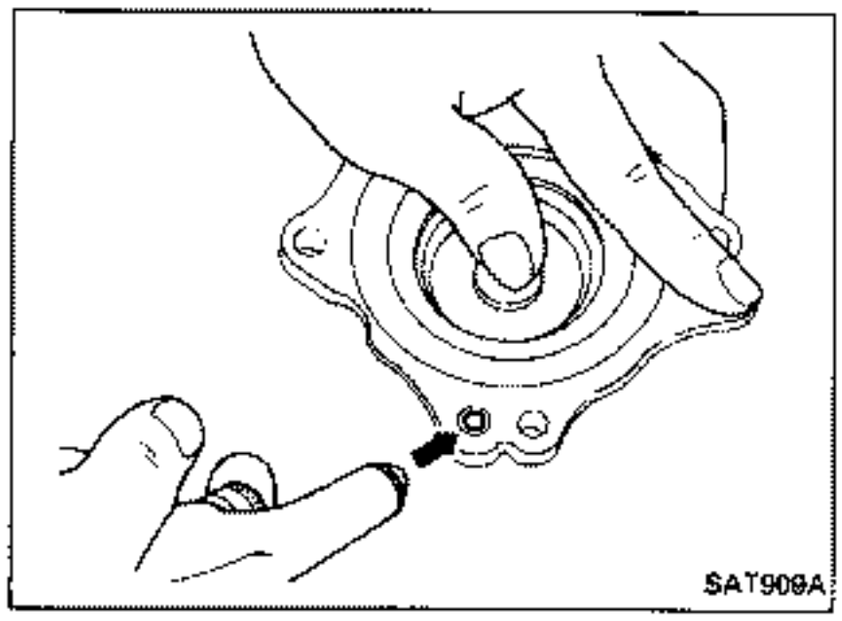

DISASSEMBLY

1. Block one oil hole in O.D. servo piston retainer and the center hole in O.D. band servo piston.
2. Apply compressed air to the other oil hole in piston retainer to remove O.D. band servo piston from retainer.
3. Remove D-ring from O.D. band servo piston.

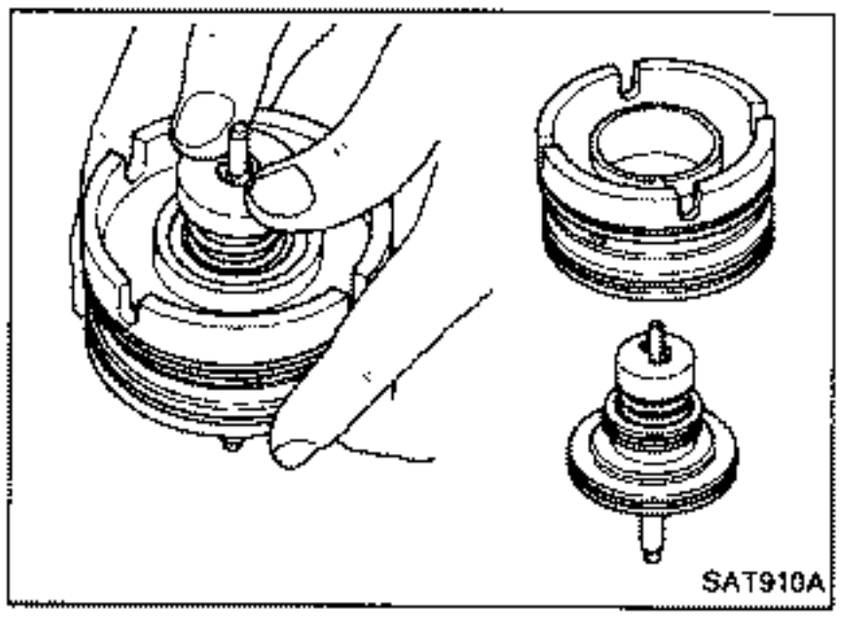

4. Remove band servo piston assembly from servo piston retainer by pushing it forward.

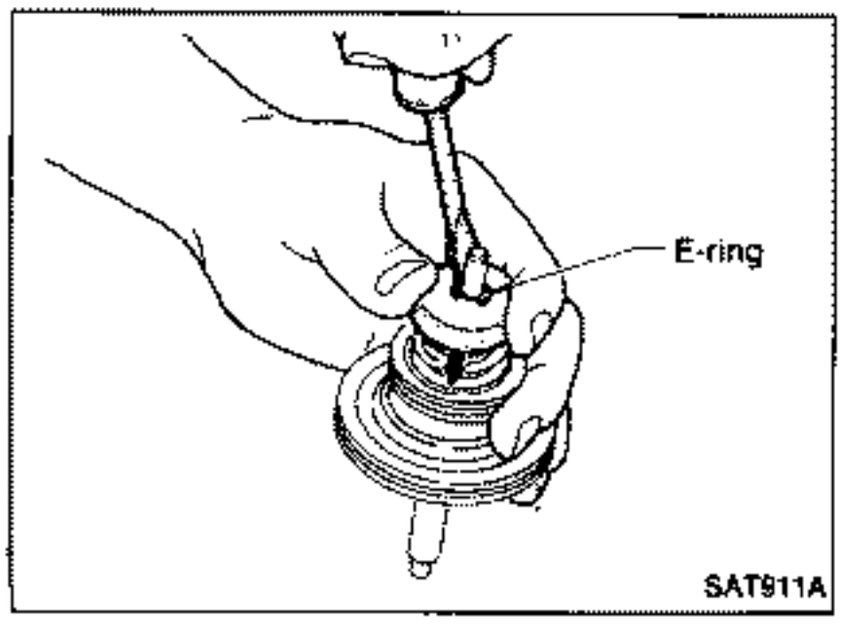

5. Place piston stem end on a wooden block. While pushing servo piston spring retainer down, remove E-ring.

Band Servo Piston Assembly (Cont'd)

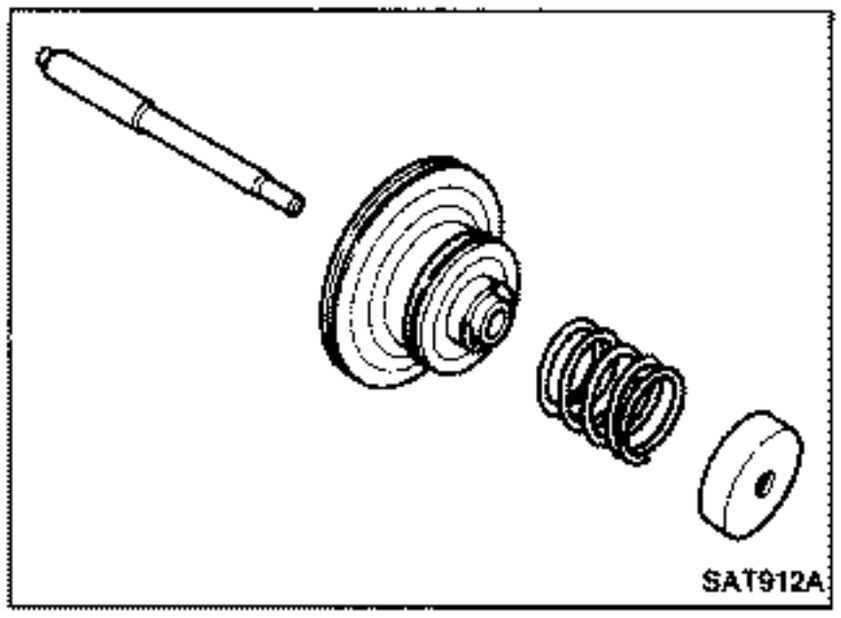
SAT912A

6. Remove servo piston spring retainer, return spring C and piston stem from band servo piston.

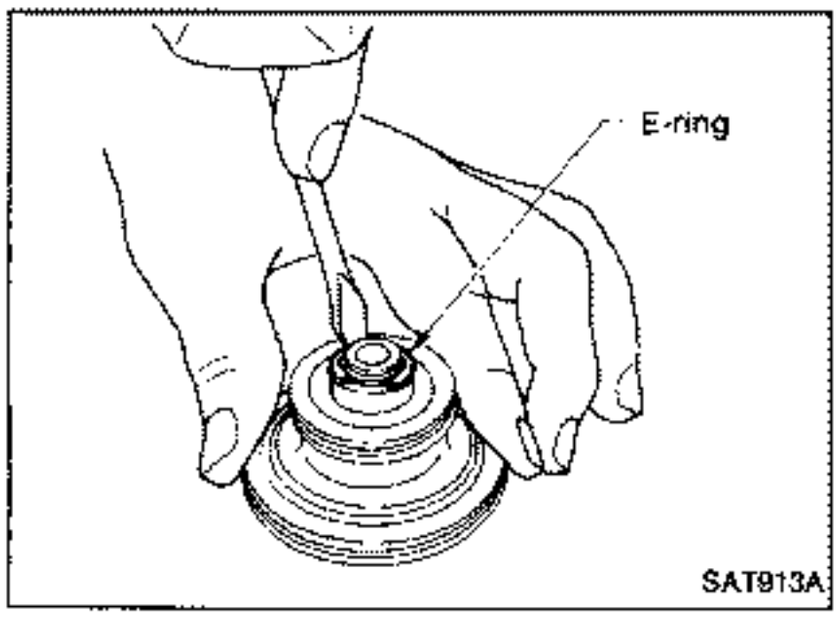

SAT913A

7. Remove E-ring from band servo piston.

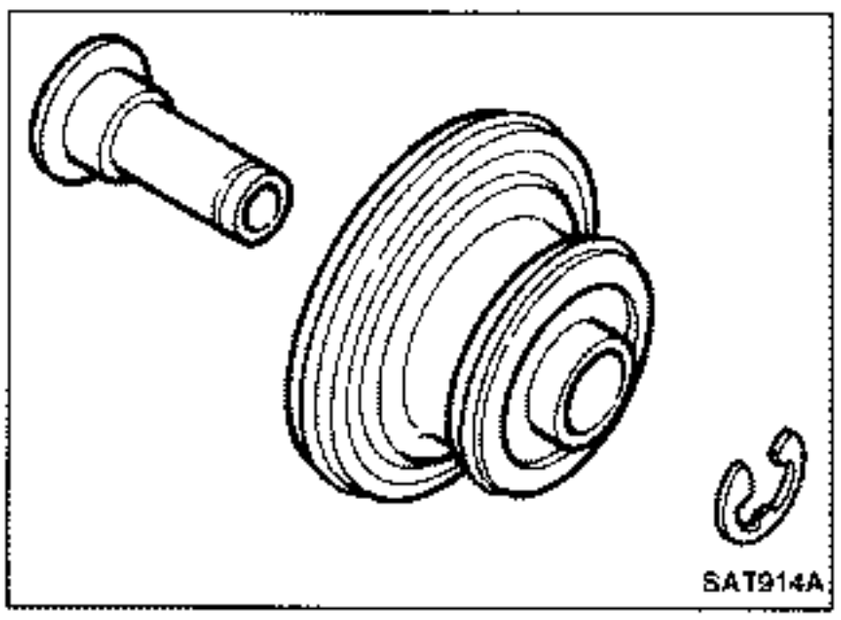
SAT914A

8. Remove servo cushion spring retainer from band servo piston.
9. Remove D-rings from band servo piston.
10. Remove O-rings from servo piston retainer.

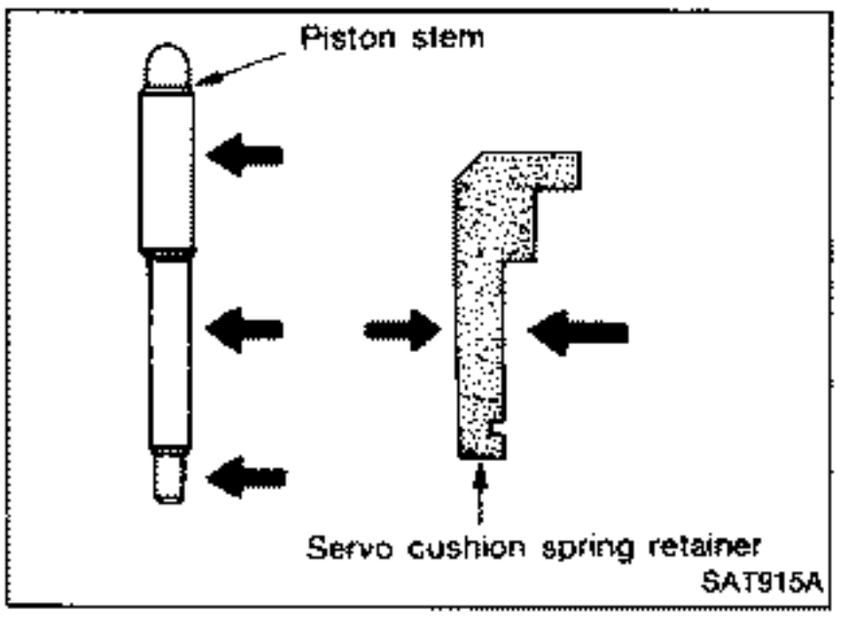

SAT915A

INSPECTION

Pistons, retainers and piston stem

- Check frictional surfaces for abnormal wear or damage.

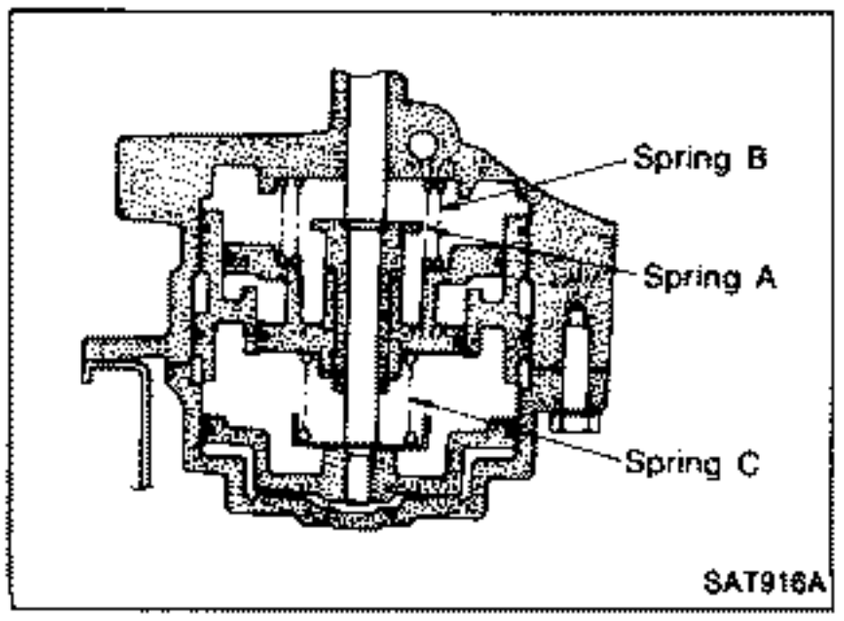

SAT916A

Return springs

- Check for deformation or damage. Measure free length and outer diameter.

Inspection standard: Unit: mm (in)

Parts	Free length	Outer diameter
Spring A	45.6 (1.795)	34.3 (1.350)
Spring B	53.8 (2.118)	40.3 (1.587)
Spring C	29.7 (1.169)	27.6 (1.087)

Band Servo Piston Assembly (Cont'd)

ASSEMBLY

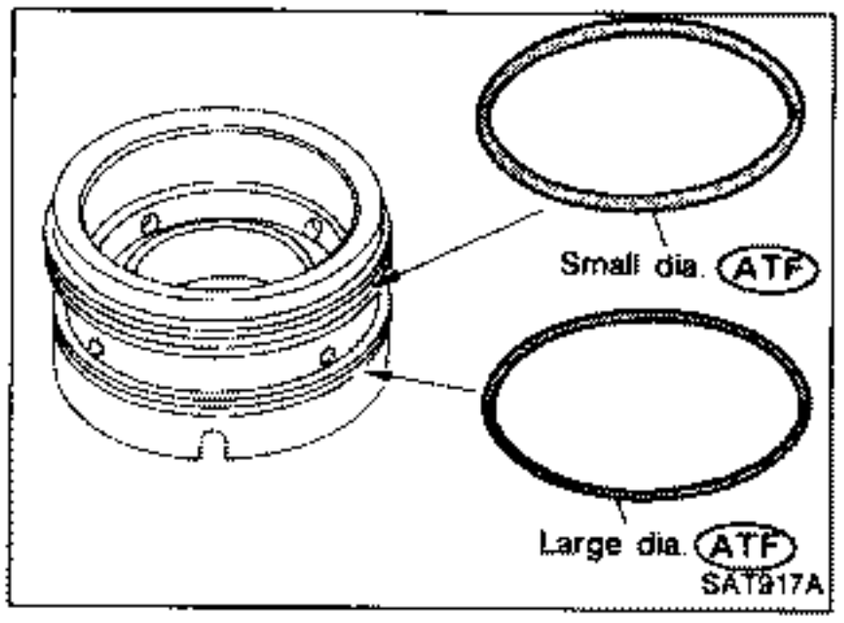

1. Install O-rings onto servo piston retainer.

- **Apply A.T.F. to O-rings.**
- **Pay attention to position of each O-ring.**

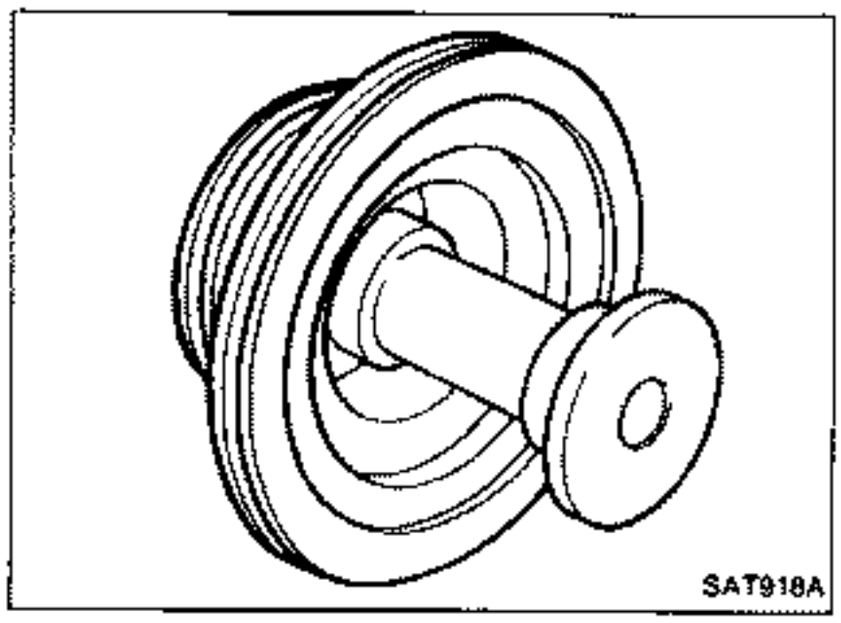

2. Install servo cushion spring retainer onto band servo piston.

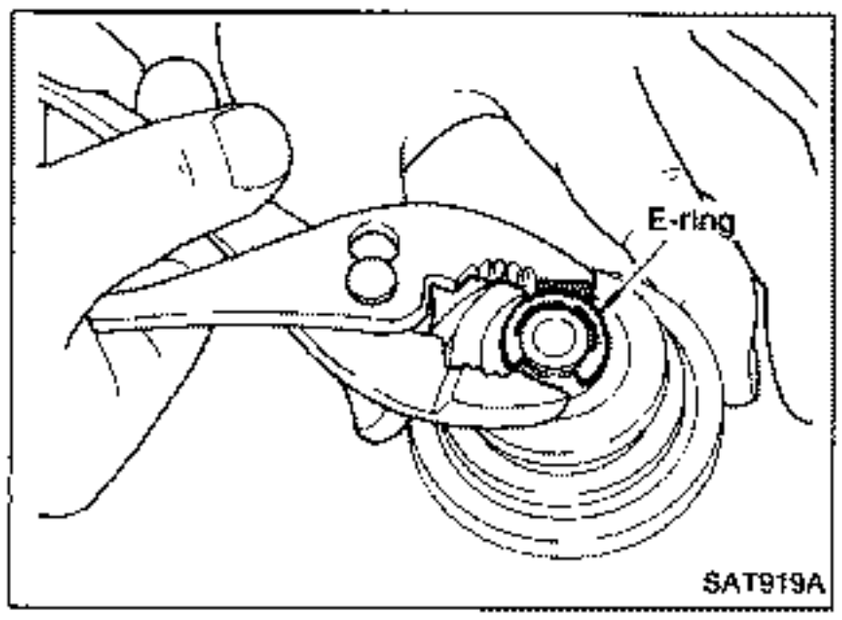

3. Install E-ring onto servo cushion spring retainer.

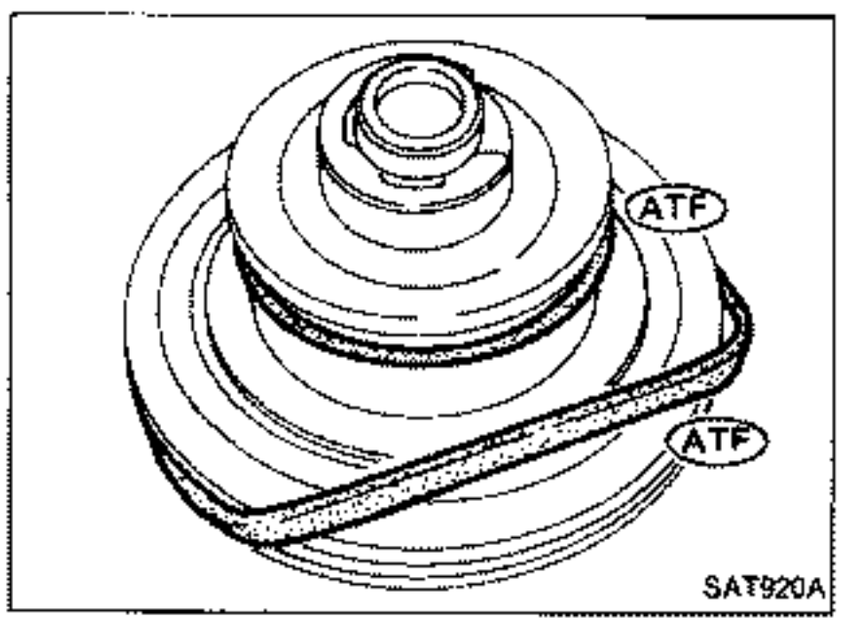

4. Install D-rings onto band servo piston.

- **Apply A.T.F. to D-rings.**

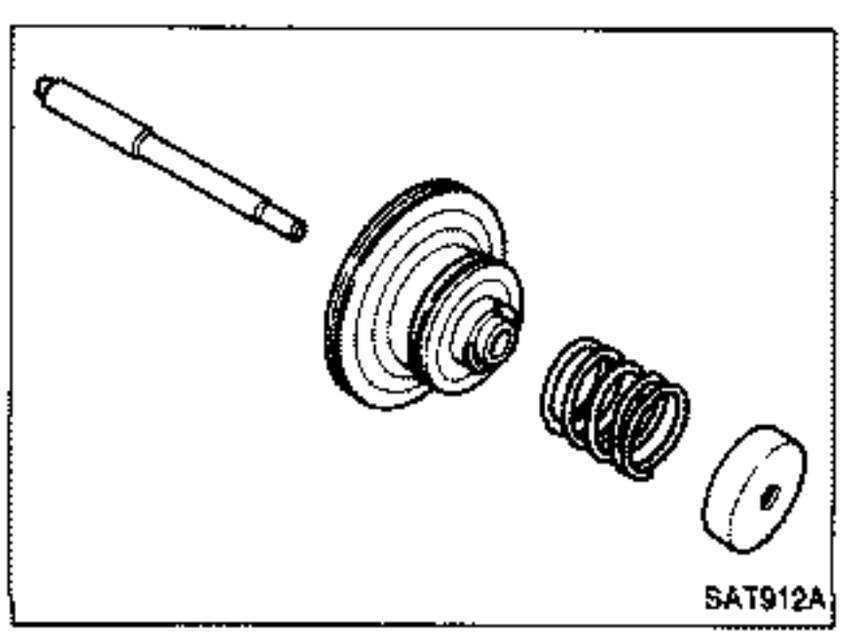

5. Install servo piston spring retainer, return spring C and piston stem onto band servo piston.

Band Servo Piston Assembly (Cont'd)

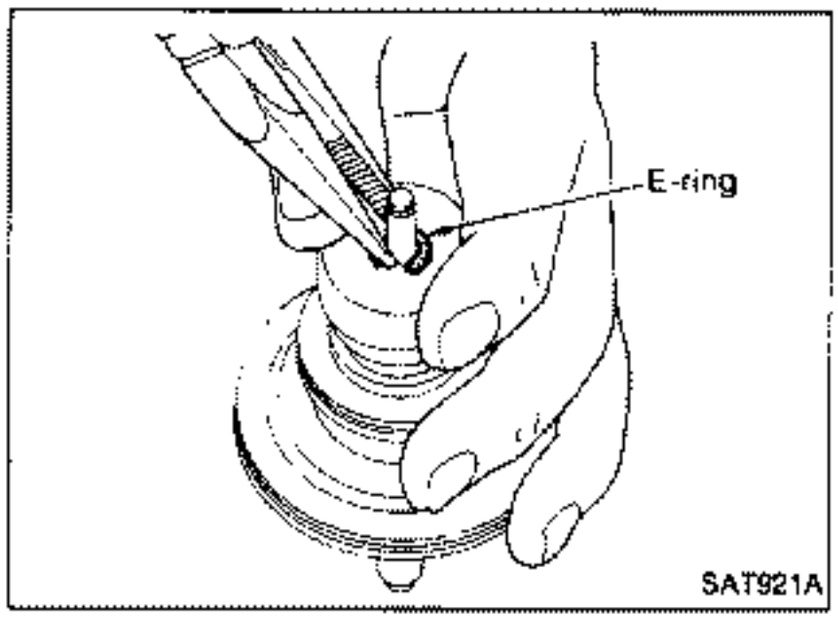

6. Place piston stem end on a wooden block. While pushing servo piston spring retainer down, install E-ring.

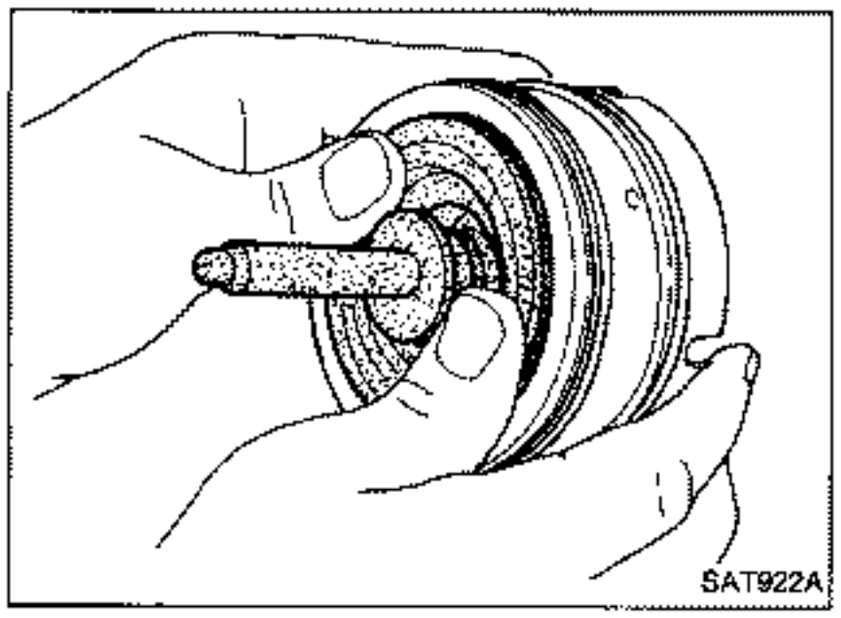

7. Install band servo piston assembly onto servo piston retainer by pushing it inward.

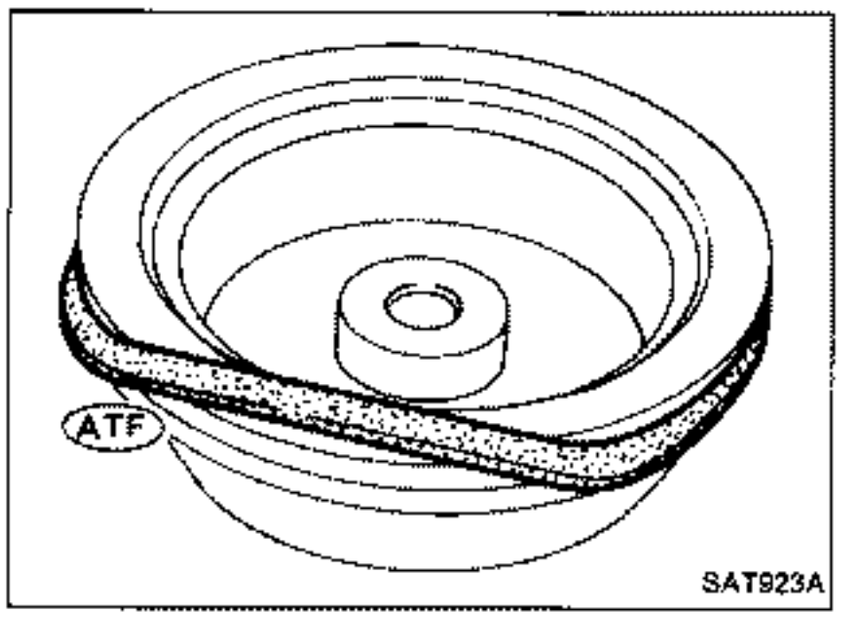

8. Install D-ring on O.D. band servo piston.
- **Apply A.T.F. to D-ring.**

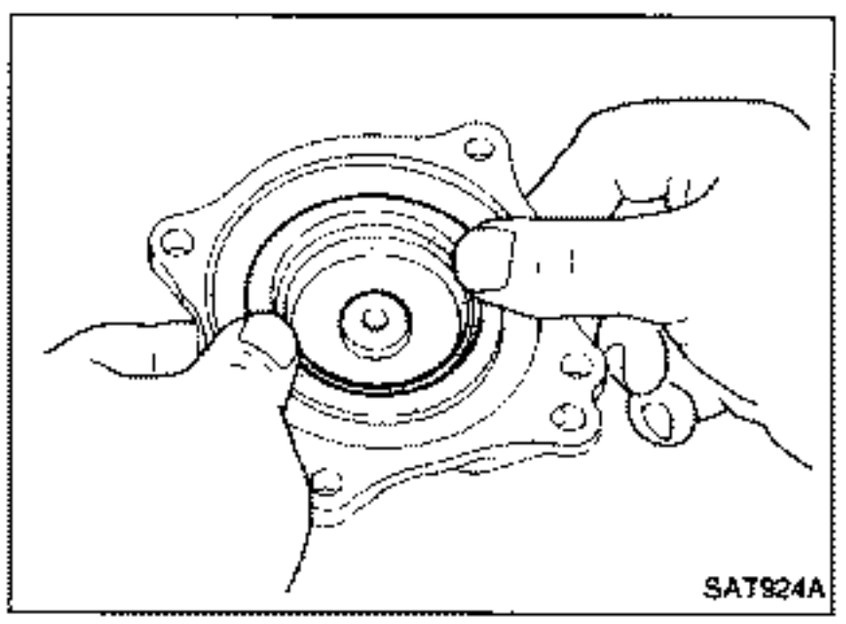

9. Install O.D. band servo piston onto servo piston retainer by pushing it inward.

Parking Pawl Components

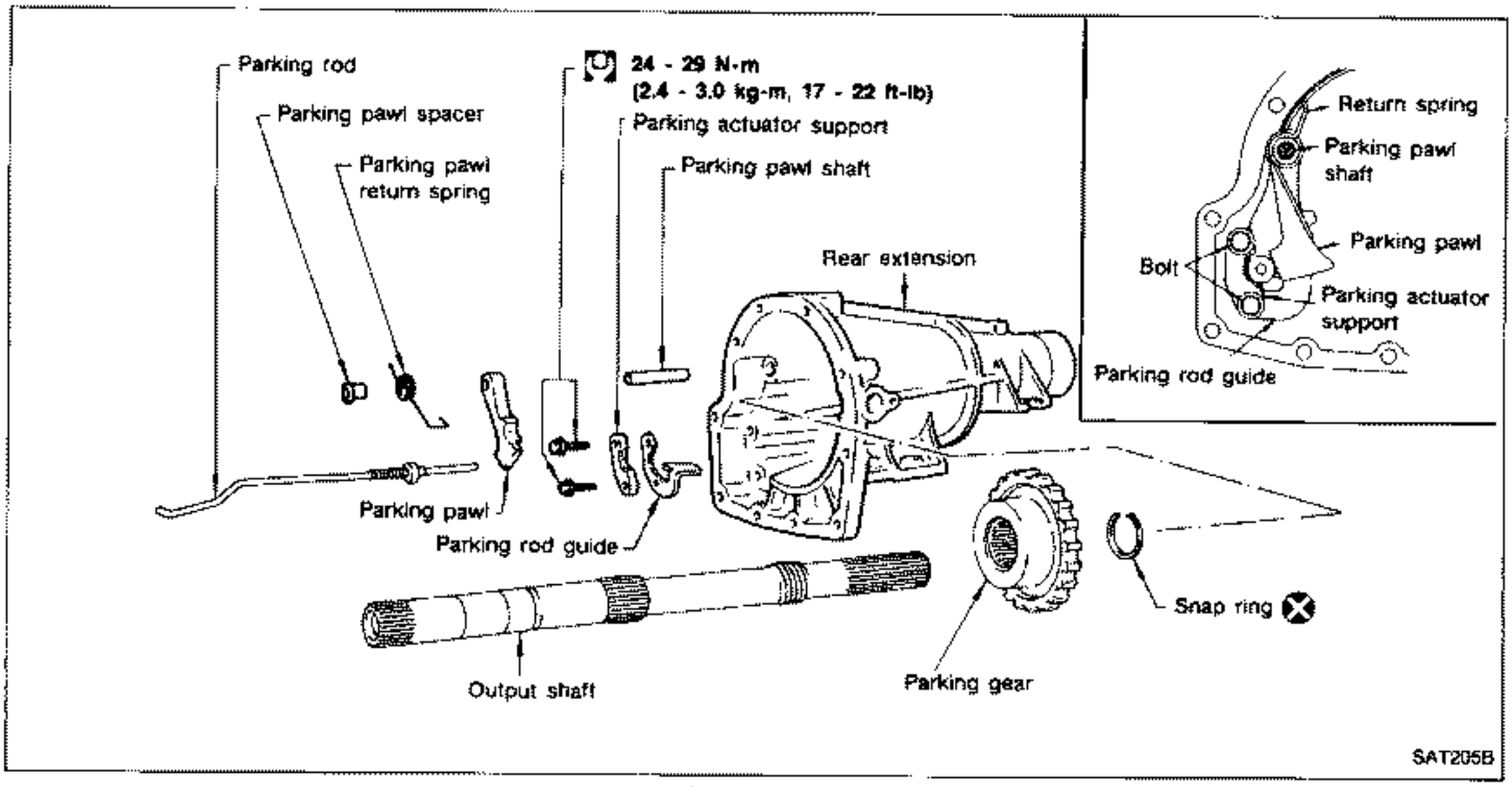

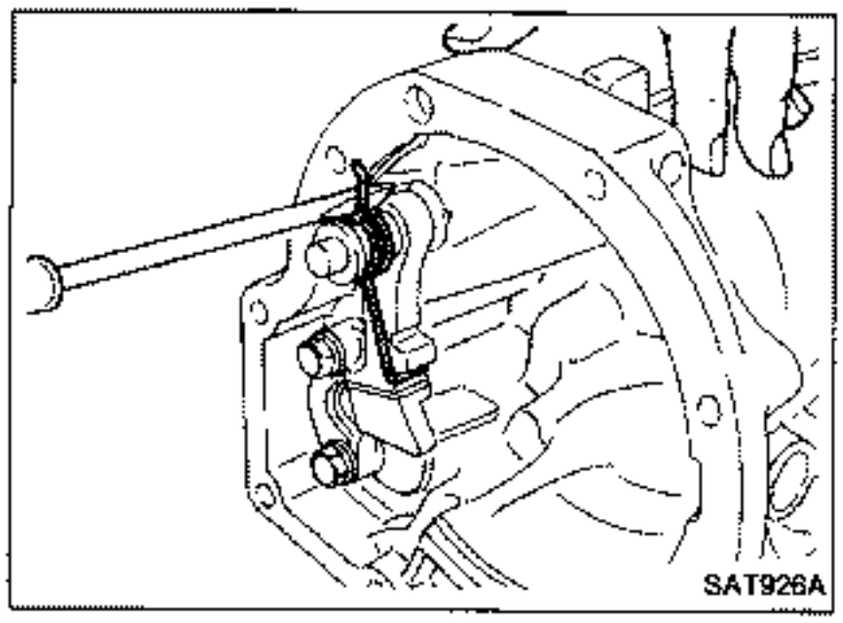

DISASSEMBLY

1. Slide return spring to the front of rear extension flange.

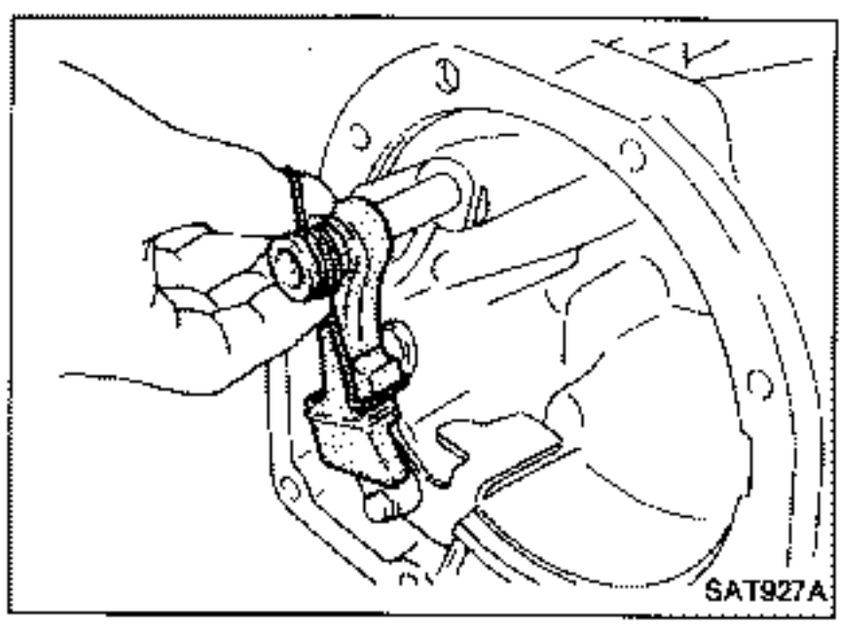

2. Remove return spring, pawl spacer and parking pawl from rear extension.
3. Remove parking pawl shaft from rear extension.

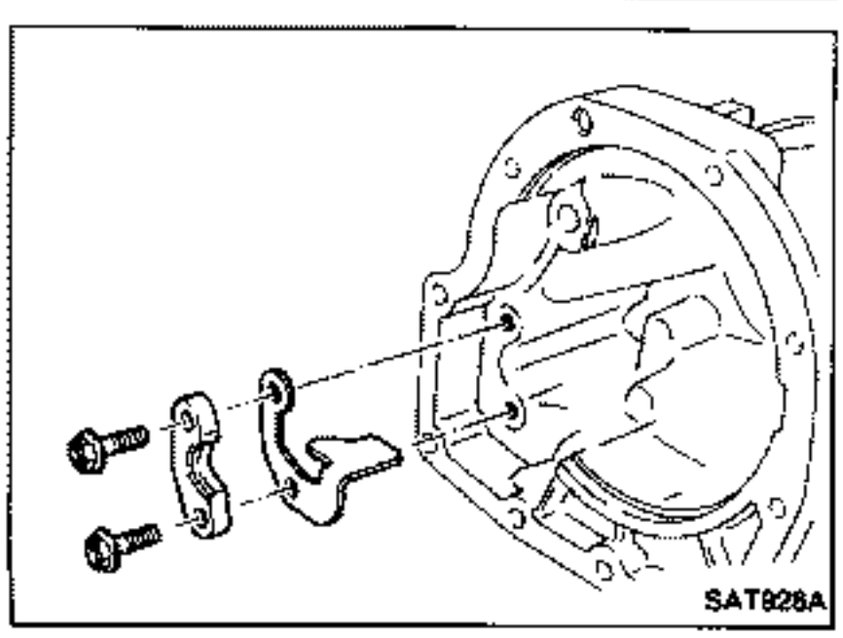

4. Remove parking actuator support and rod guide from rear extension.

Parking Pawl Components (Cont'd)

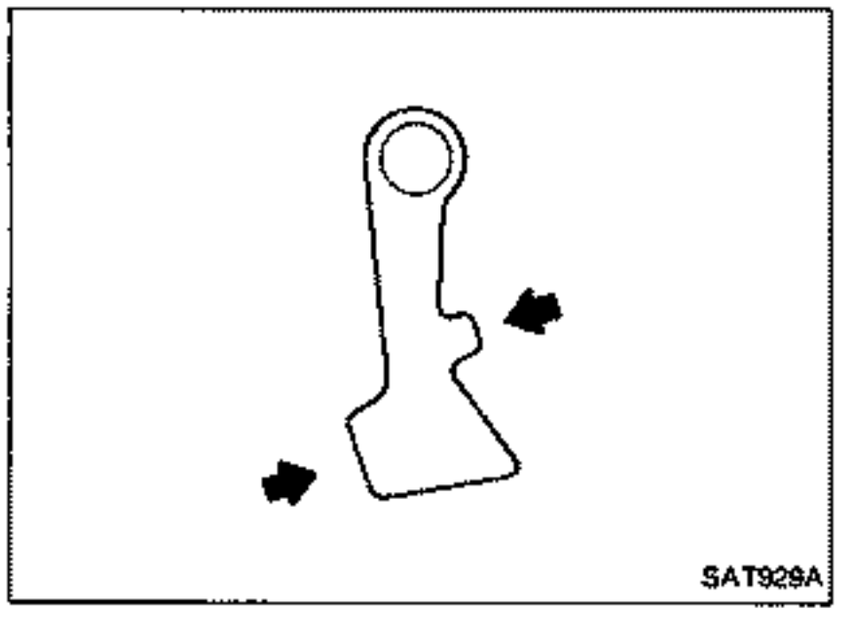
SAT929A

INSPECTION

Parking pawl and parking actuator support

- Check contact surface of parking rod for wear.

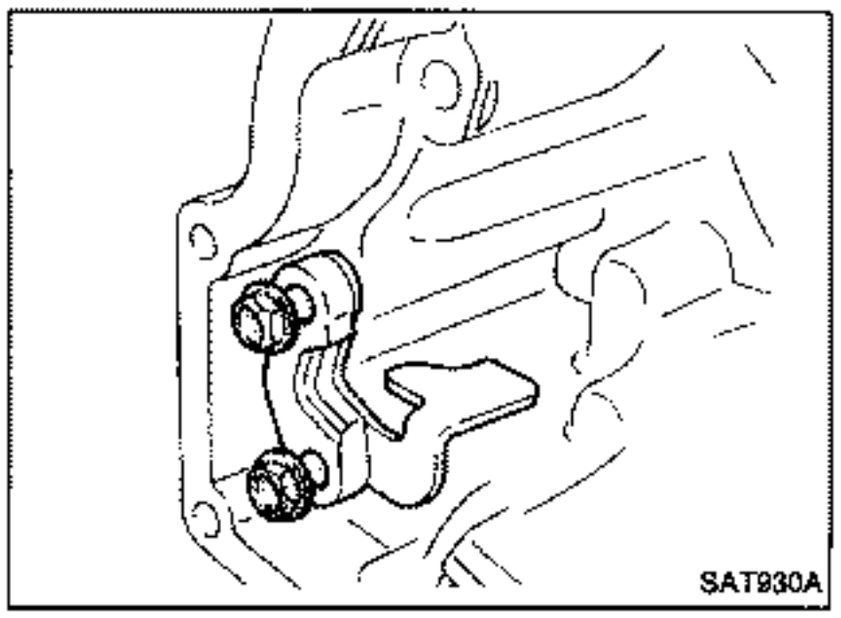
SAT930A

ASSEMBLY

1. Install rod guide and parking actuator support onto rear extension.
2. Insert parking pawl shaft into rear extension.

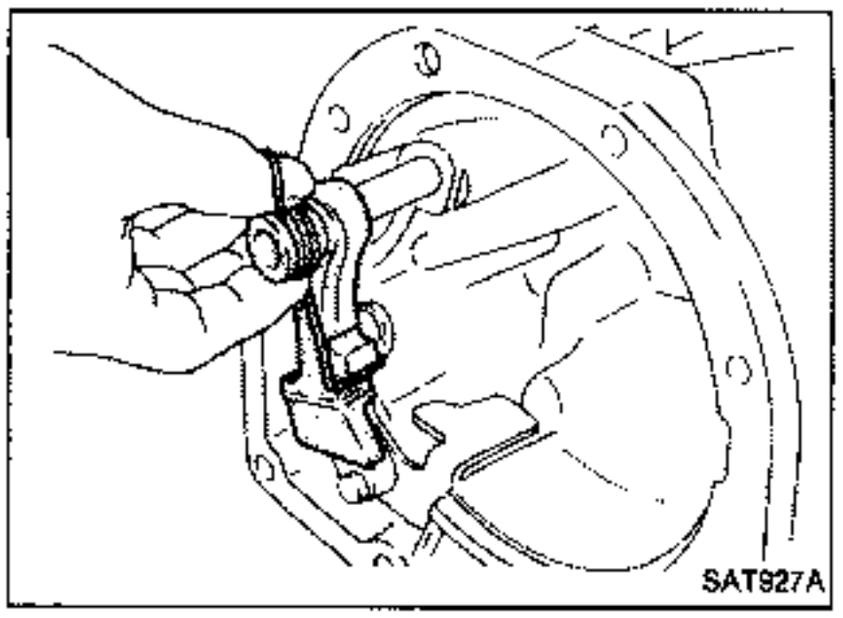
SAT927A

3. Install return spring, pawl spacer and parking pawl onto parking pawl shaft.

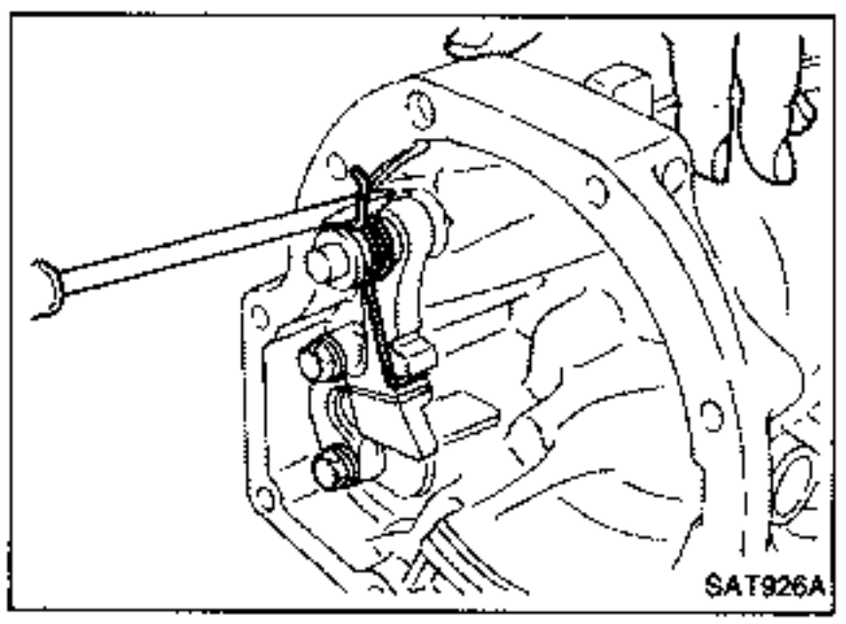
SAT926A

4. Bend return spring upward and install it onto rear extension.

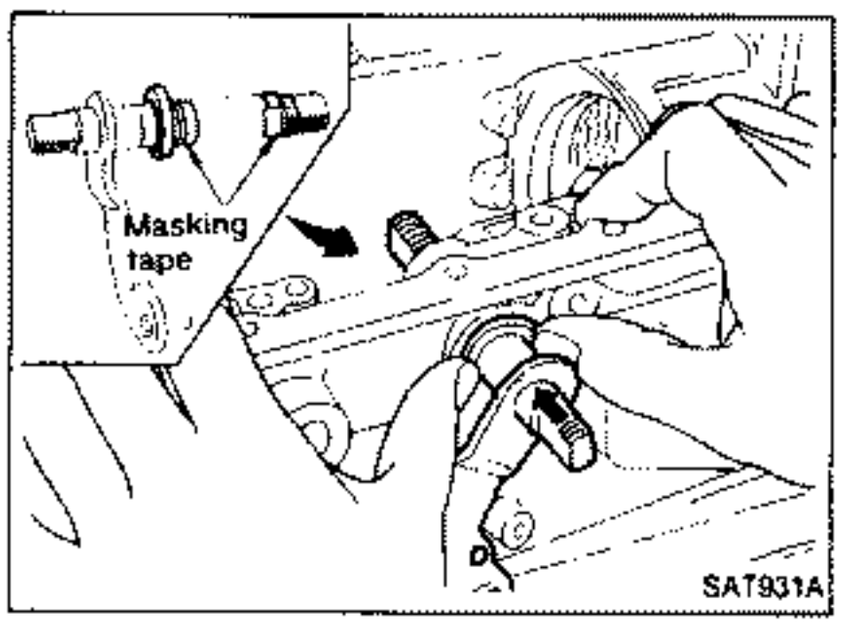

Assembly

1. Install manual shaft components.

a. Install oil seal onto manual shaft.

- **Apply A.T.F. to oil seal.**
- **Wrap threads of manual shaft with masking tape.**

b. Insert manual shaft and oil seal as a unit into transmission case.

c. Remove masking tape.

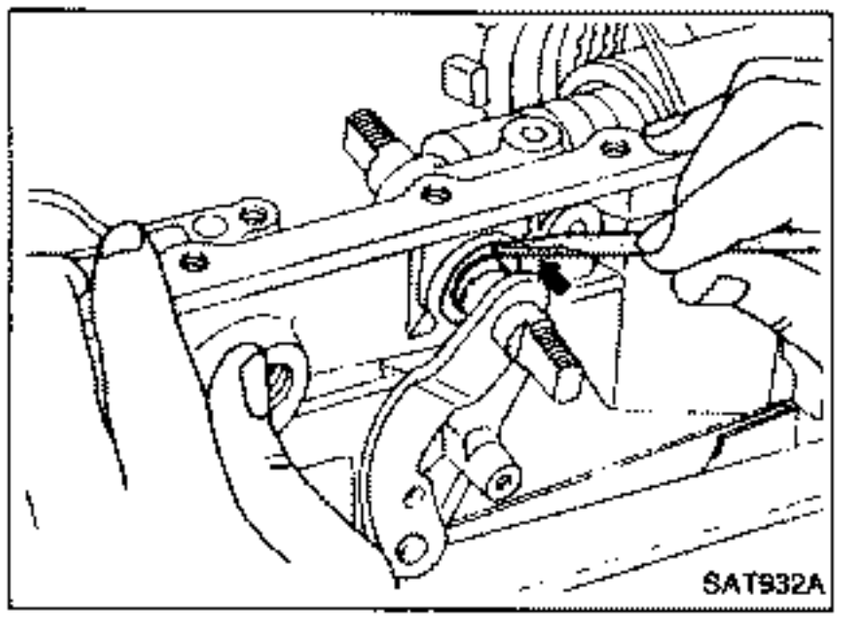

d. Push oil seal evenly and install it onto transmission case.

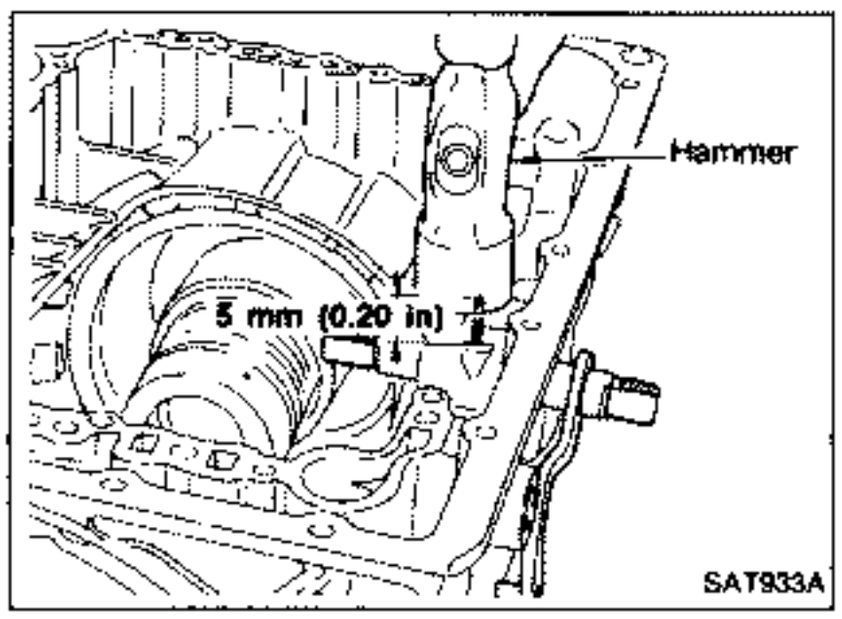

e. Align groove in shaft with drive pin hole, then drive pin into position as shown in figure at left.

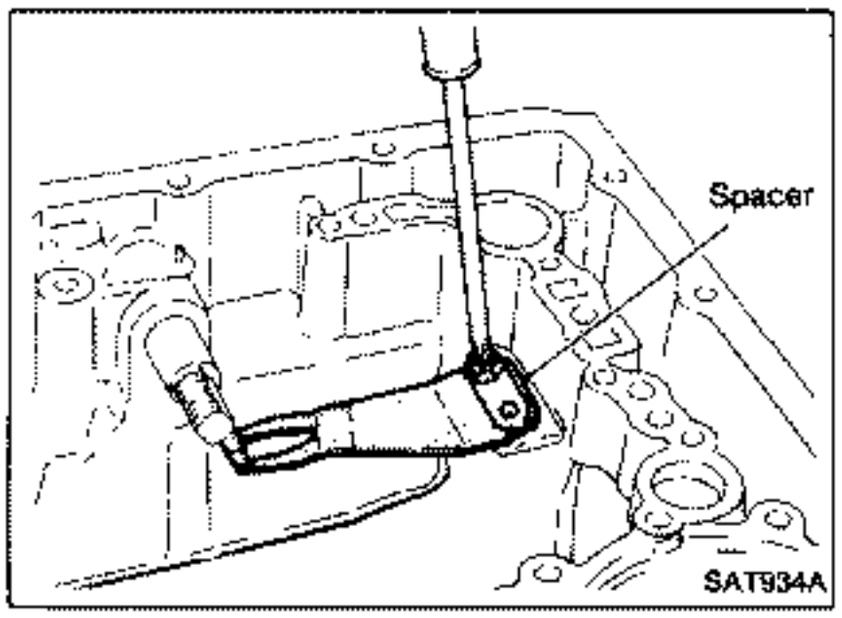

f. Install detent spring and spacer.

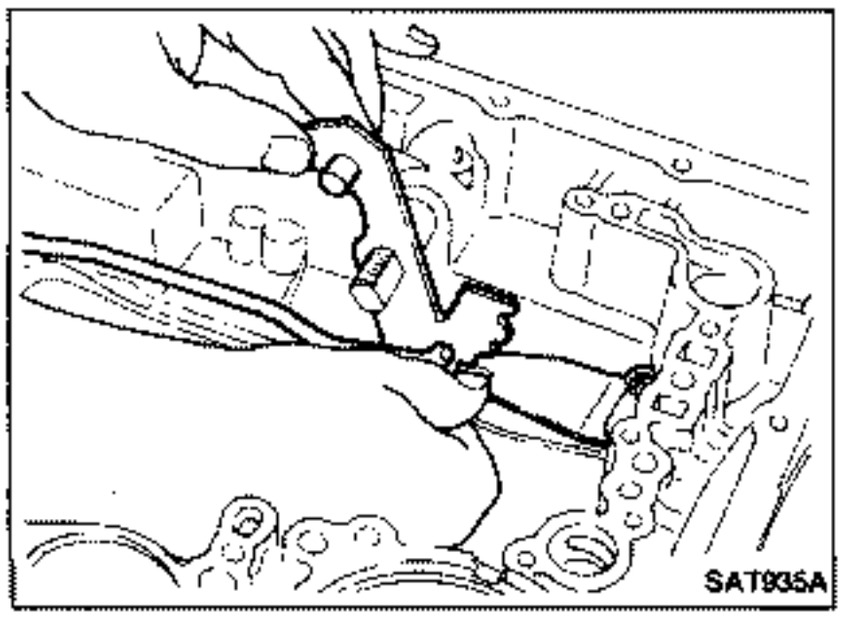

g. While pushing detent spring down, install manual plate onto manual shaft.

Assembly (Cont'd)

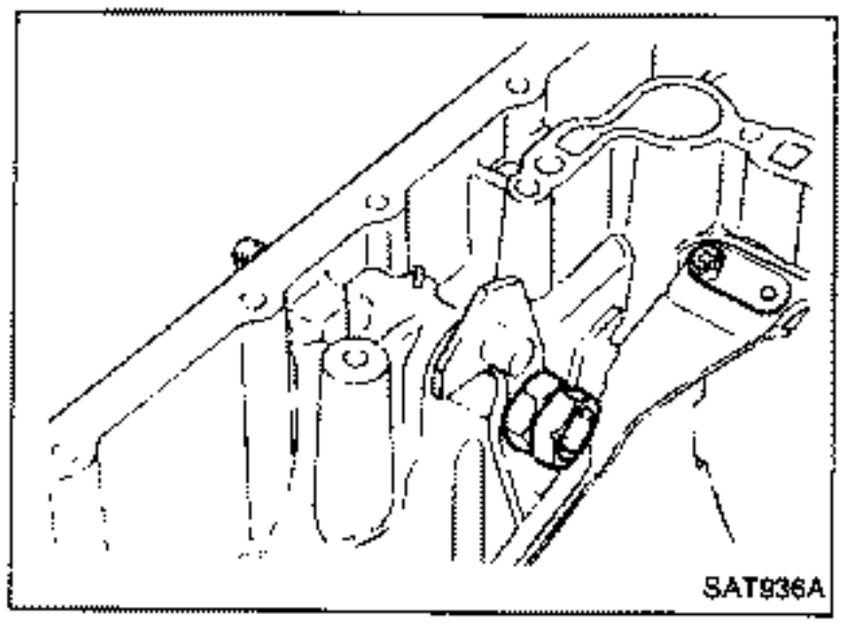

h. Install lock nuts onto manual shaft.

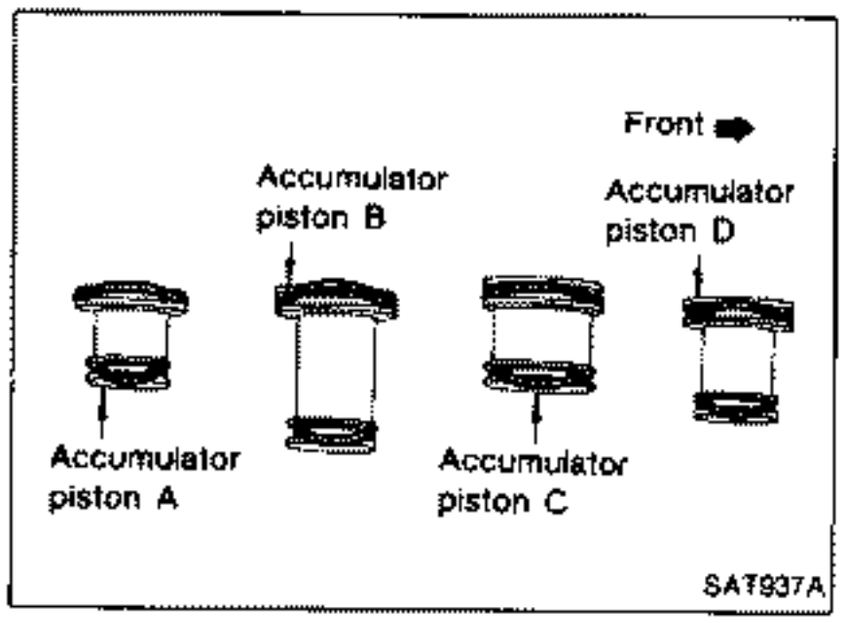

2. Install accumulator piston.
a. Install O-rings onto accumulator piston.

- **Apply A.T.F. to O-rings.**

Accumulator piston O-rings: Unit: mm (in)

Accumulator	A	B	C	D
Small diameter end	29 (1.14)	32 (1.26)	45 (1.77)	29 (1.14)
Large diameter end	45 (1.77)	50 (1.97)	50 (1.97)	45 (1.77)

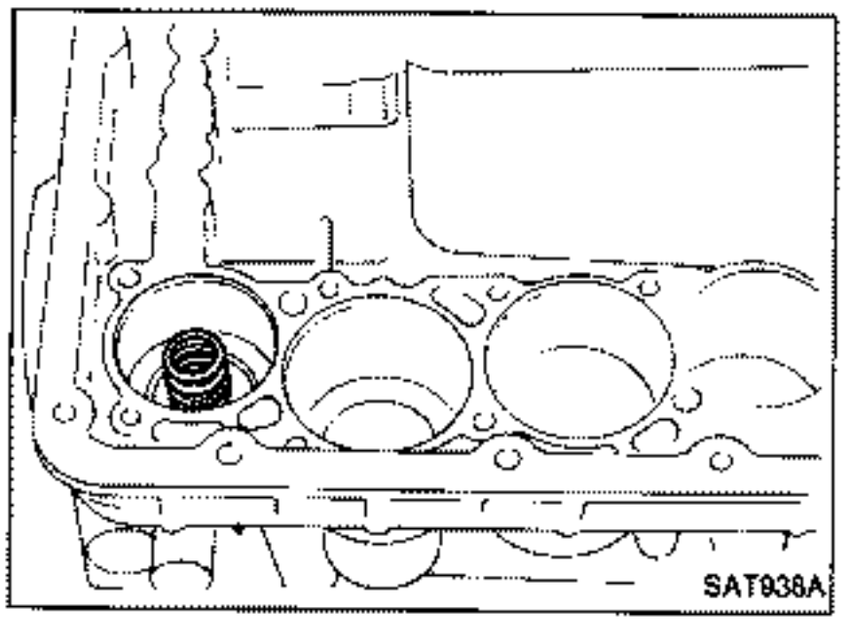

b. Install return spring for accumulator A onto transmission case.

Free length of return spring: Unit: mm (in)

Accumulator	A
Free length	43 (1.69)

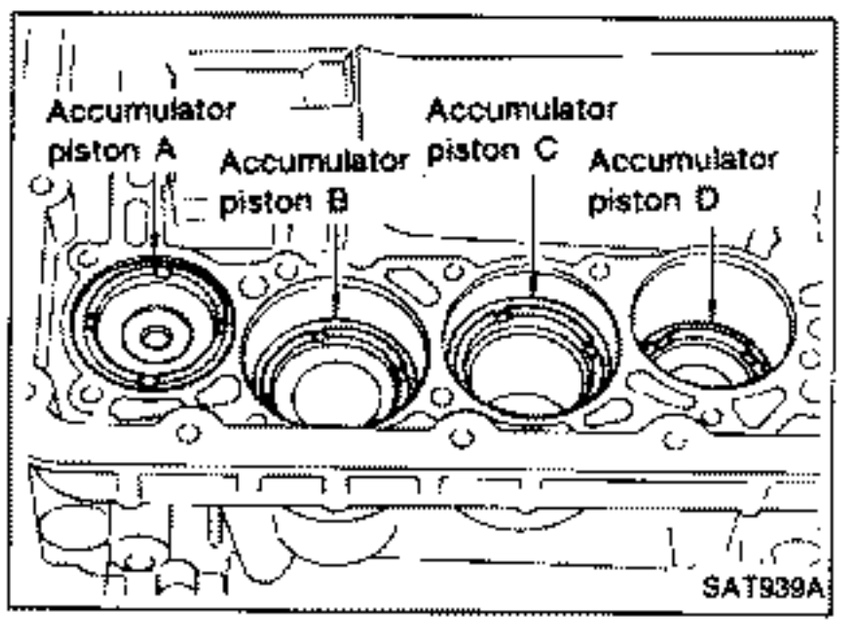

c. Install accumulator pistons A, B, C and D.

- **Apply A.T.F. to transmission case.**

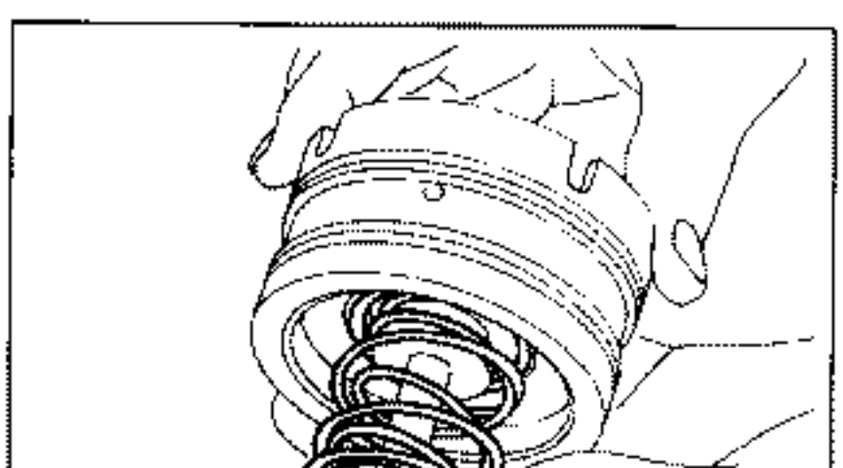

3. Install band servo piston.
a. Install return springs onto servo piston.

Assembly (Cont'd)

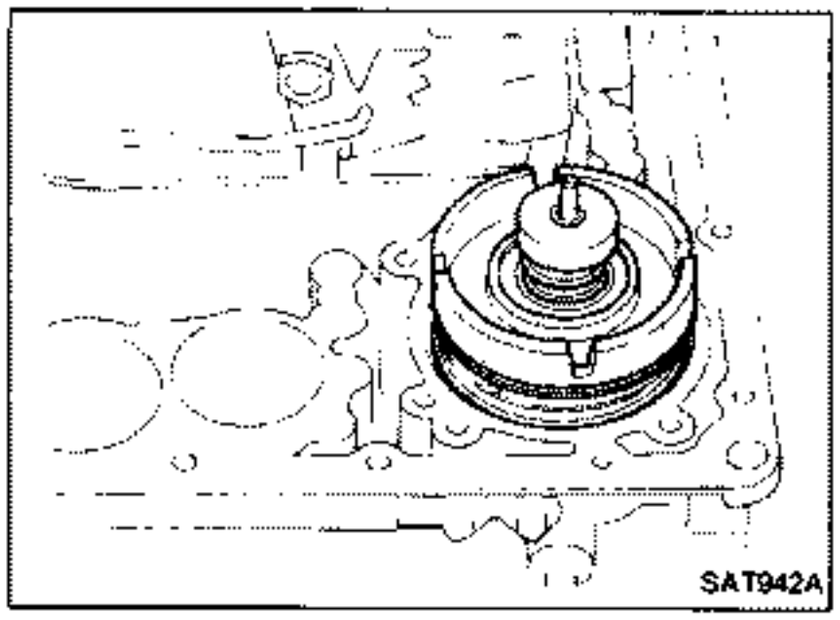

b. Install band servo piston onto transmission case.

- **Apply A.T.F. to O-ring of band servo piston and transmission case.**

c. Install gasket for band servo onto transmission case.

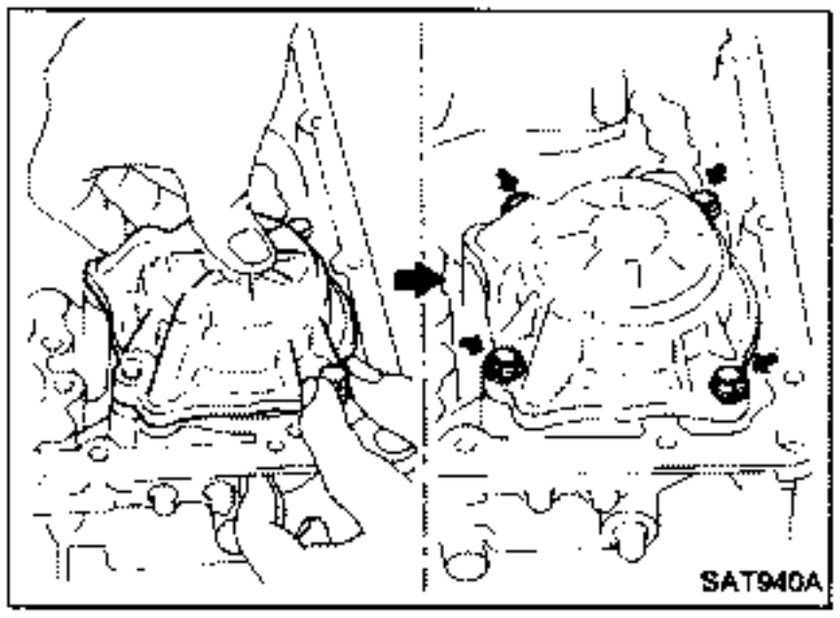

d. Install band servo retainer onto transmission case.

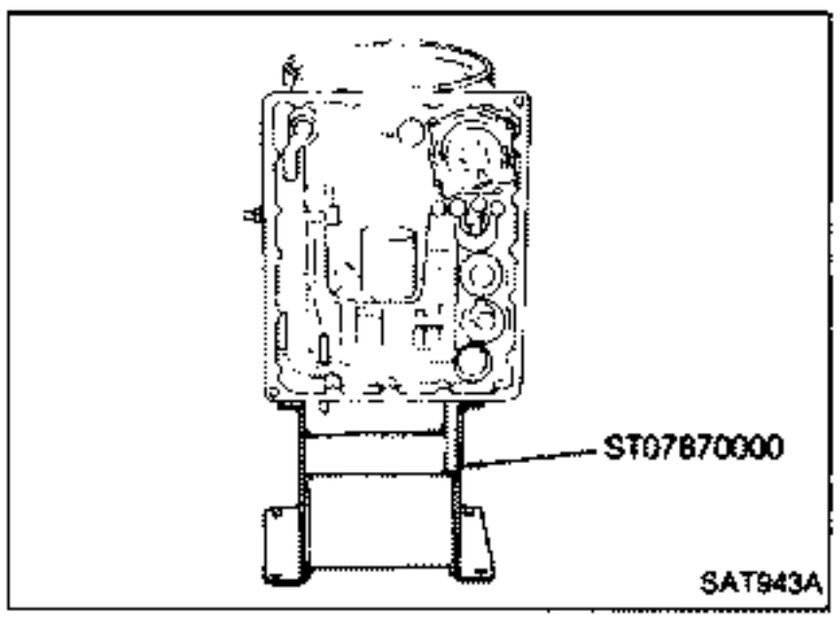

4. Install rear side clutch and gear components.

a. Place transmission case in vertical position.

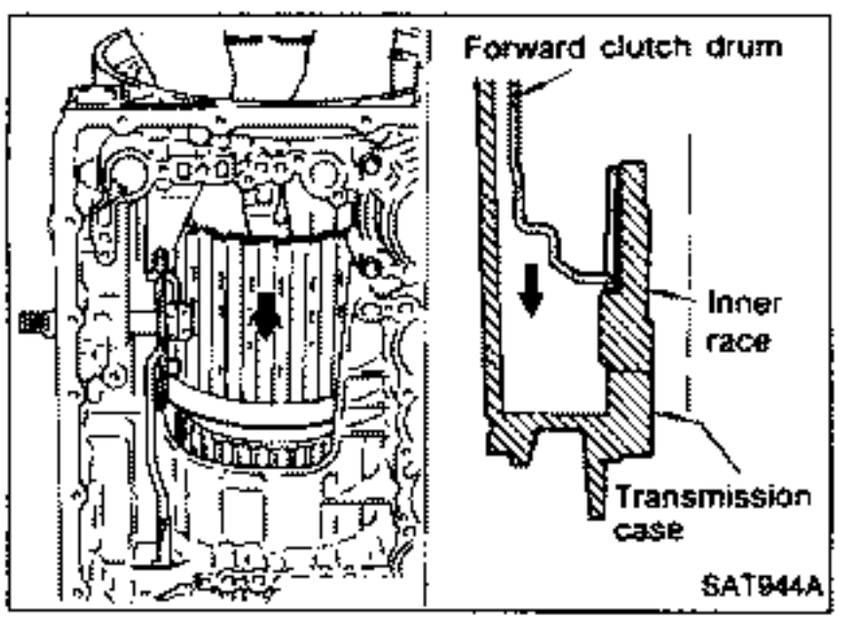

b. Slightly lift forward clutch drum assembly and slowly rotate it clockwise until its hub passes fully over the clutch inner race inside transmission case.

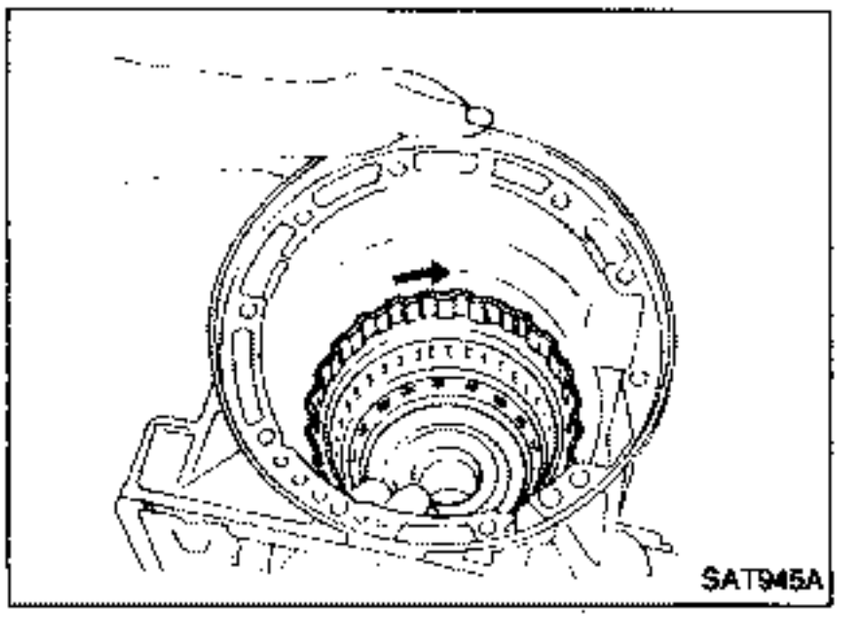

c. Check to be sure that rotation direction of forward clutch assembly is correct.

Assembly (Cont'd)

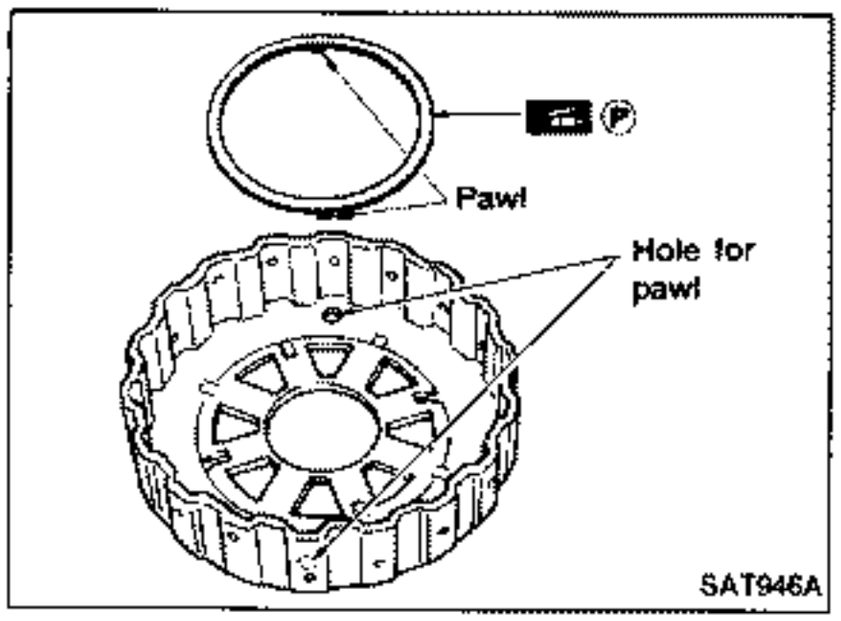

d. Install thrust washer onto front of overrun clutch hub.

- **Apply petroleum jelly to the thrust washer.**
- **Insert pawls of thrust washer securely into holes in overrun clutch hub.**

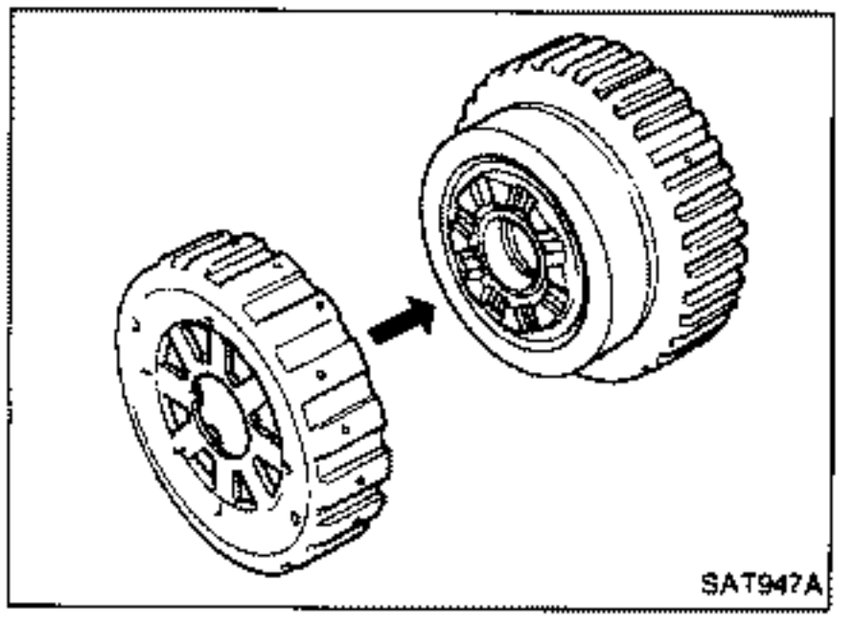

e. **Install** overrun clutch hub onto rear internal gear assembly.

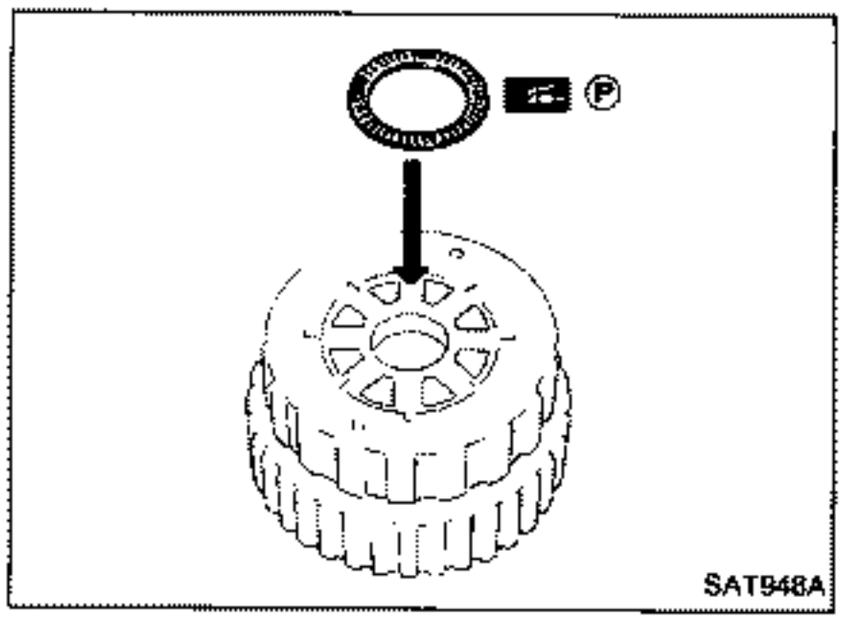

f. Install needle bearing onto rear of overrun clutch hub.

- **Apply petroleum jelly to needle bearing.**

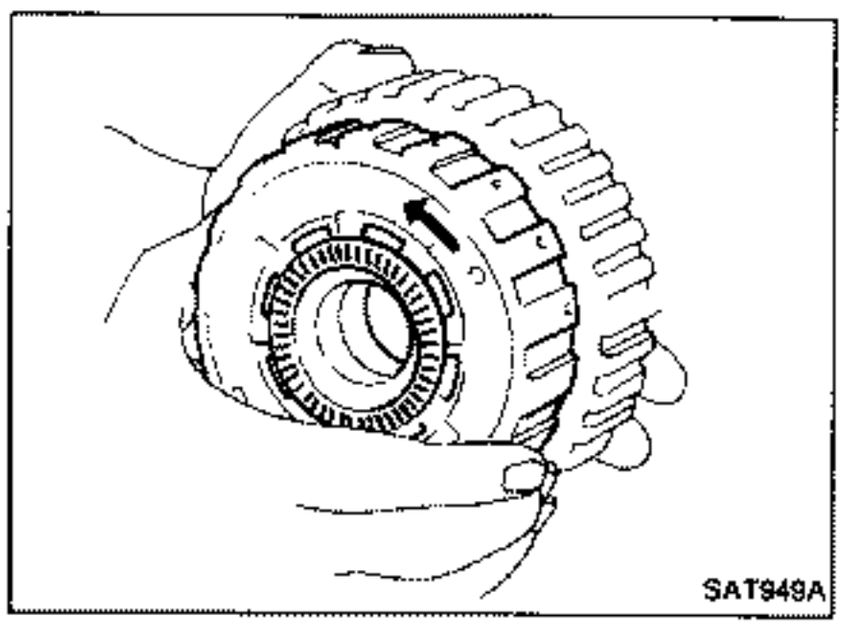

g. Check that overrun clutch hub rotates as shown while holding forward clutch hub.

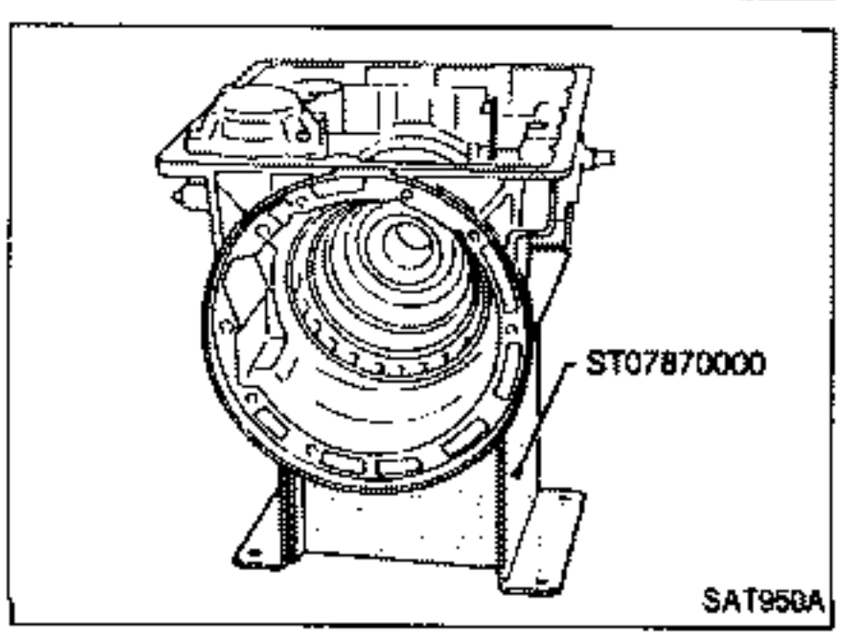

h. Place transmission case into horizontal position.

Assembly (Cont'd)

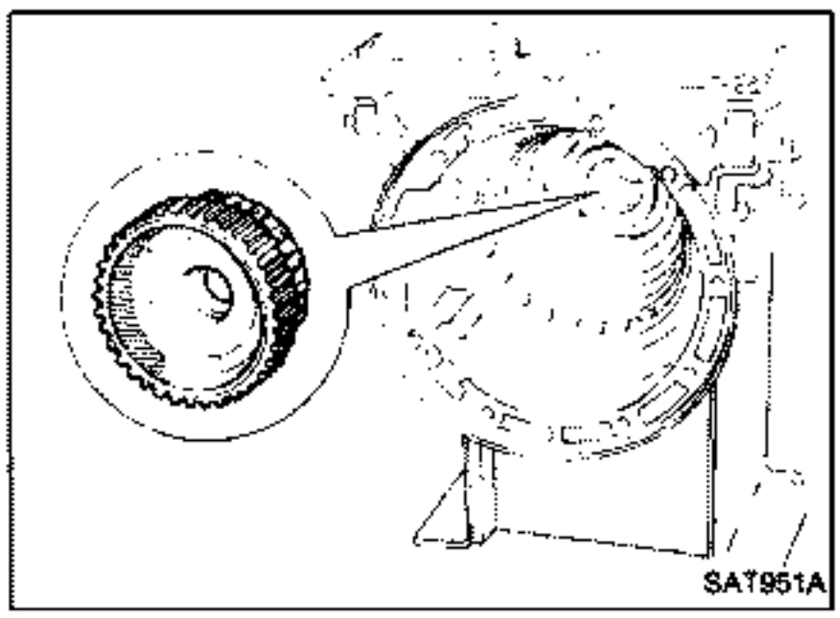

i. Install rear internal gear, forward clutch hub and overrun clutch hub as a unit onto transmission case.

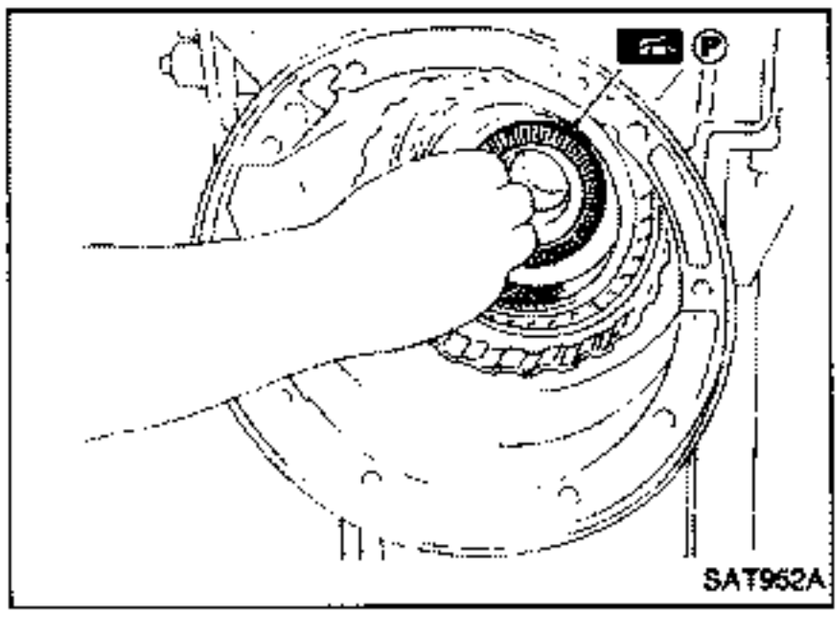

j. Install needle bearing onto rear internal gear.

- **Apply petroleum jelly to needle bearing.**

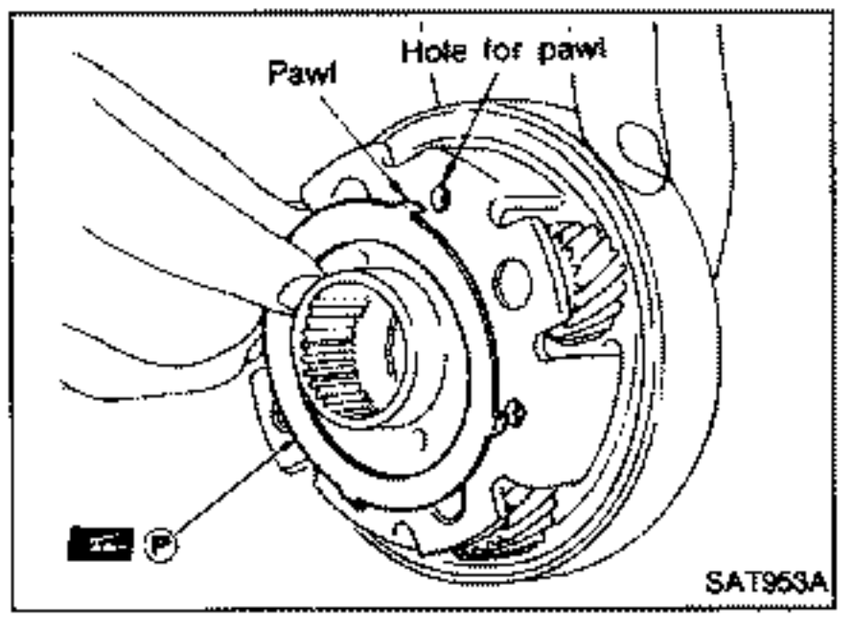

k. Install bearing race onto rear of front internal gear.

- **Apply petroleum jelly to bearing race.**
- **Securely engage pawls of bearing race with holes in front internal gear.**

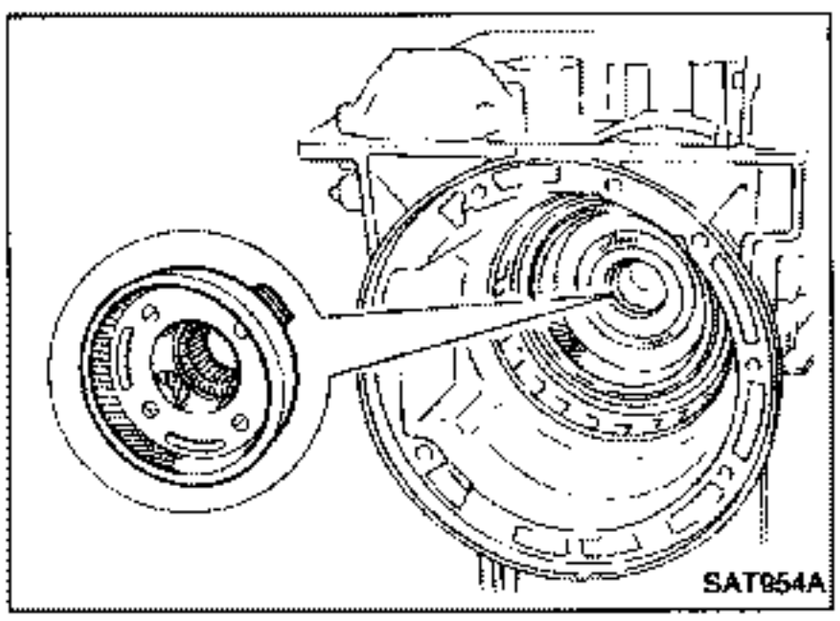

l. **Install front internal gear on transmission case.**

Adjustment

When any parts listed in the following table are replaced, total end play or reverse clutch end play must be adjusted.

Item / Part name	Total end play	Reverse clutch end play
Transmission case	●	●
Low one-way clutch inner race	●	●
Overrun clutch hub	●	●
Rear internal gear	●	●
Rear planetary carrier	●	●
Rear sun gear	●	●
Front planetary carrier	●	●
Front sun gear	●	●
High clutch hub	●	●
High clutch drum	●	●
Oil pump cover	●	●
Reverse clutch drum	—	●

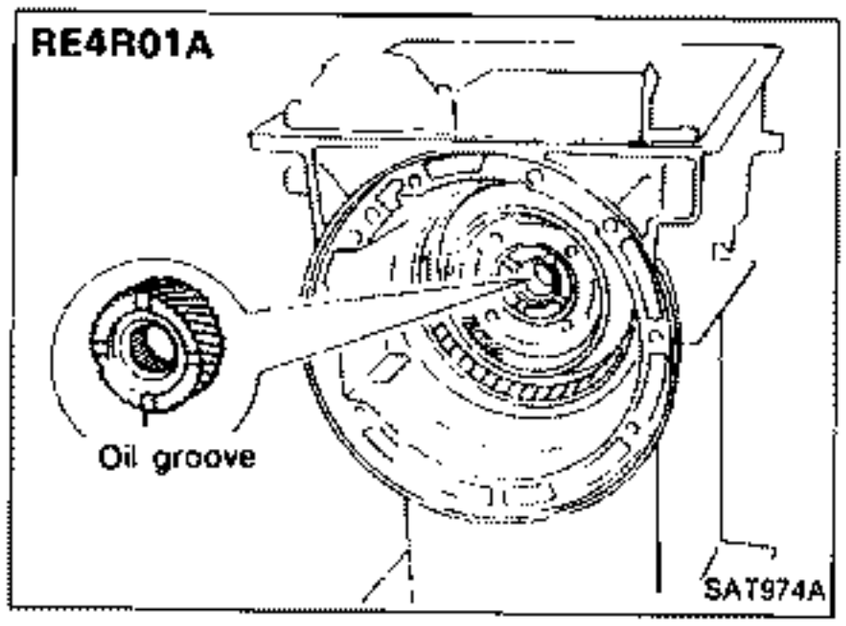

1. Install front side clutch and gear components.
a. Install rear sun gear on transmission case.
- **Pay attention to its direction.**

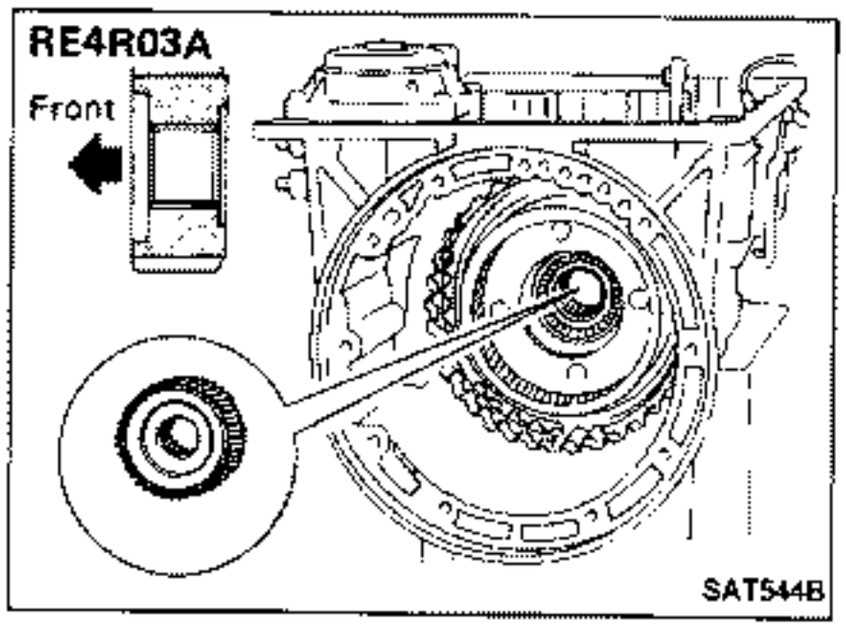

Adjustment (Cont'd)

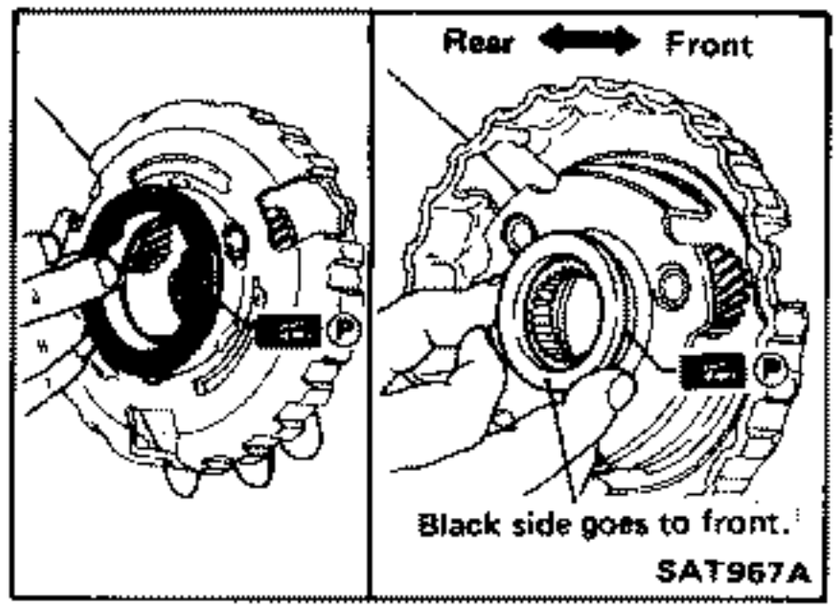

b. Install needle bearing on front of front planetary carrier.
- **Apply petroleum jelly to needle bearing.**

c. Install needle bearing on rear of front planetary carrier.
- **Apply petroleum jelly to bearing.**
- **Pay attention to its direction — Black side goes to front.**

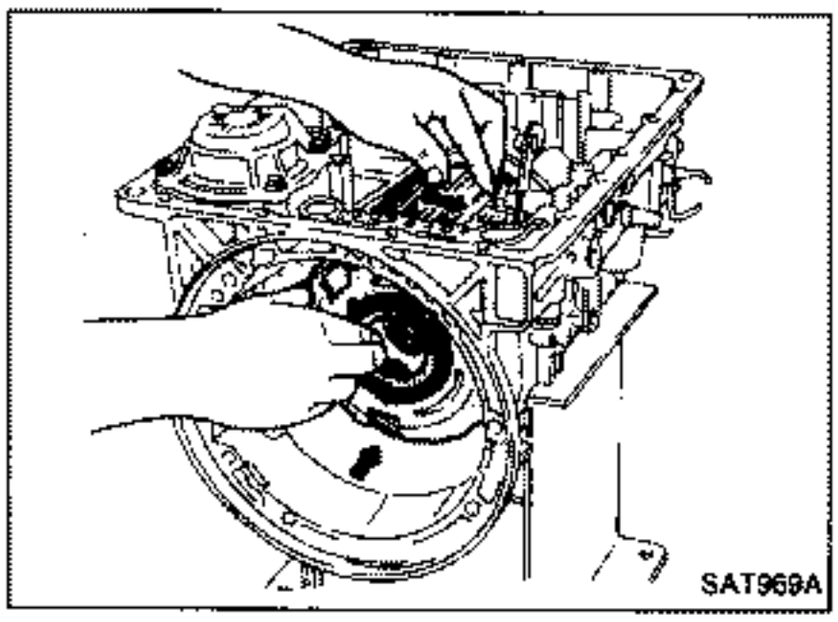

d. While rotating forward clutch drum clockwise, install front planetary carrier on forward clutch drum.

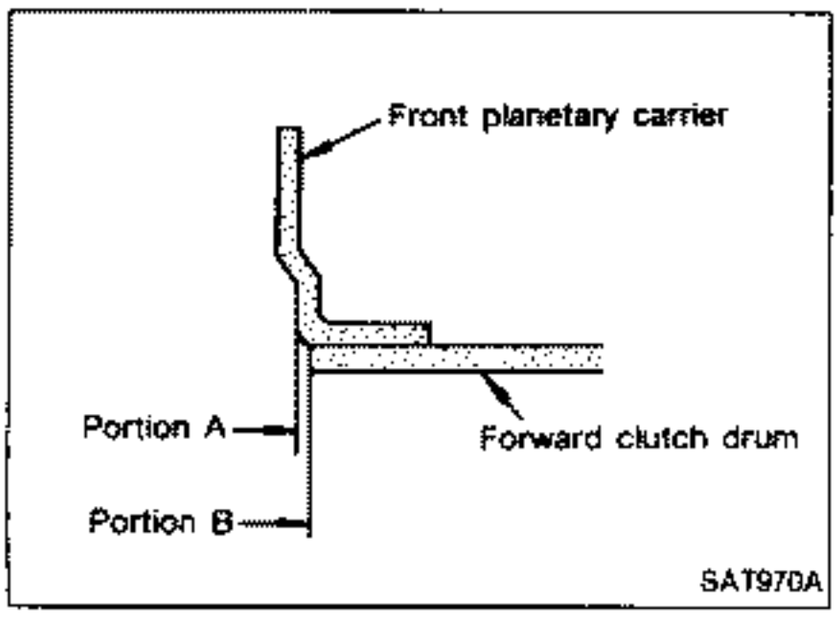

- **Check that portion A of front planetary carrier protrudes approximately 2 mm (0.08 in) beyond portion B of forward clutch assembly. (RE4R01A only)**

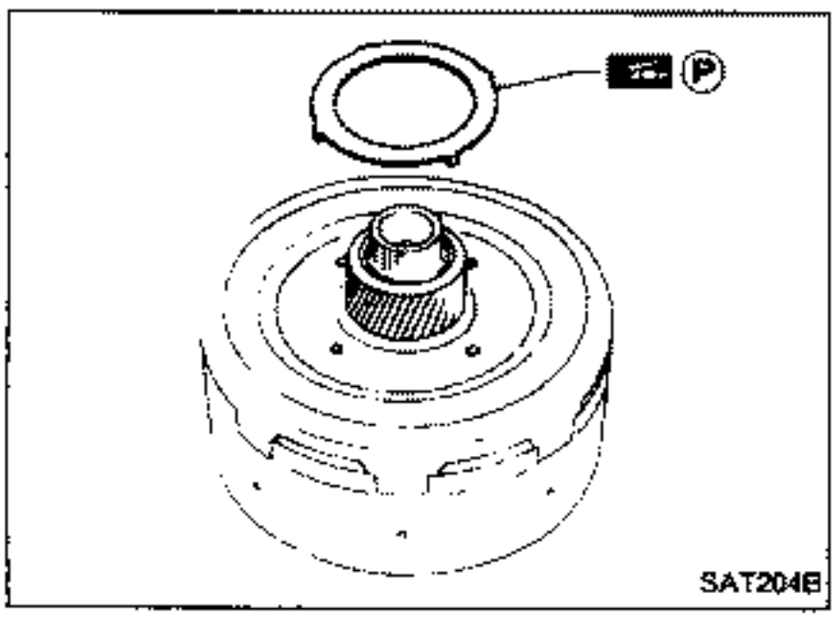

e. Install bearing race (RE4R01A) or needle bearing (RE4R03A) on rear of clutch pack.
- **Apply petroleum jelly to bearing races.**
- **Securely engage pawls of bearing race with hole in clutch pack.**

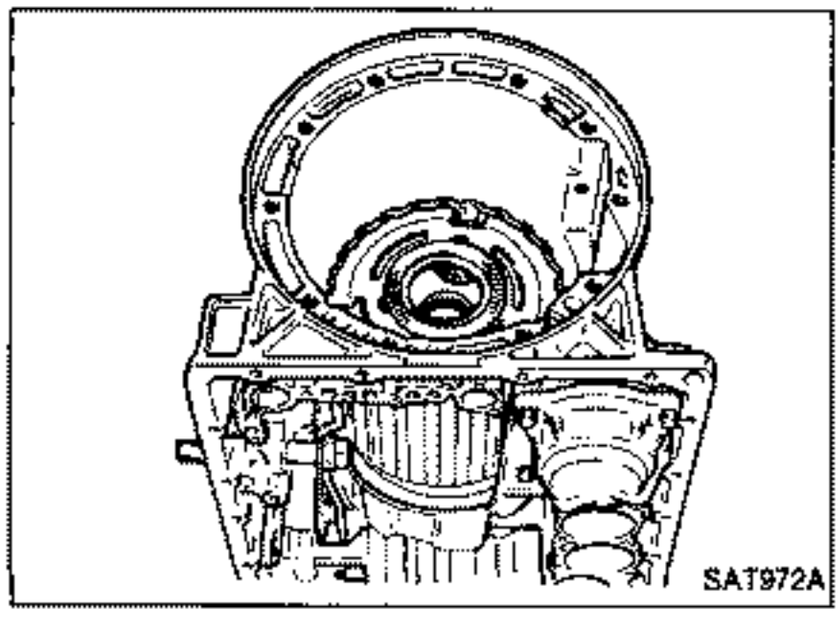

f. Place transmission case in vertical position.

Adjustment (Cont'd)

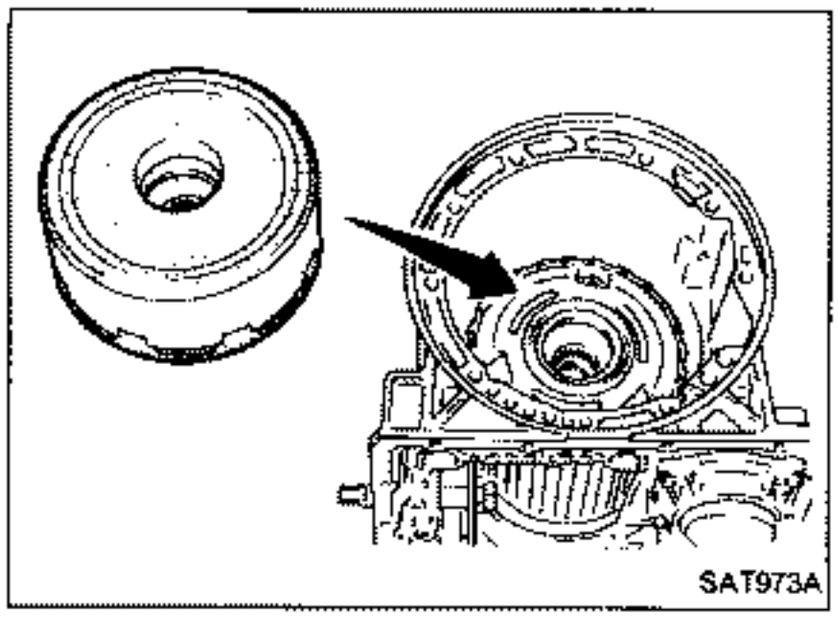

g. Install clutch pack into transmission case.

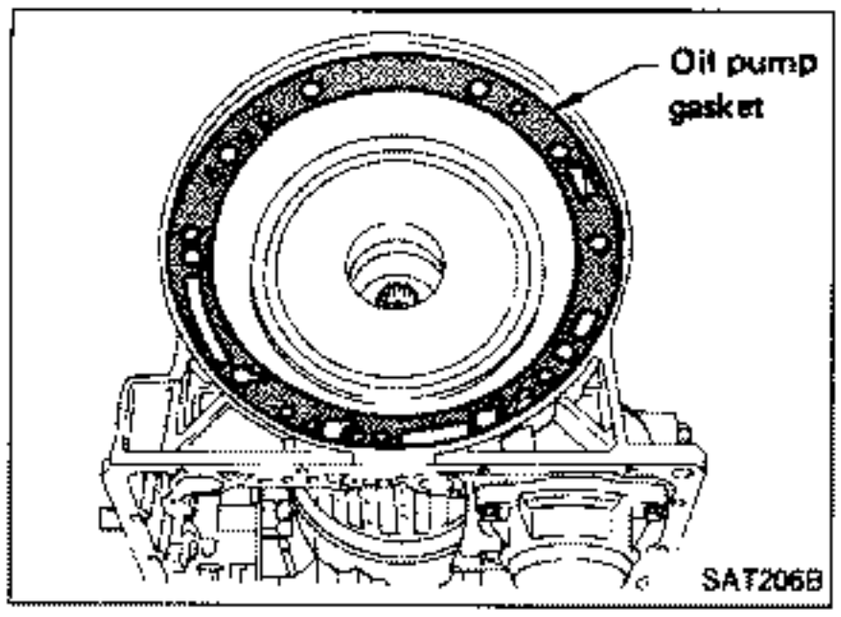

2. Adjust total end play.
a. Install new oil pump gasket on transmission case.

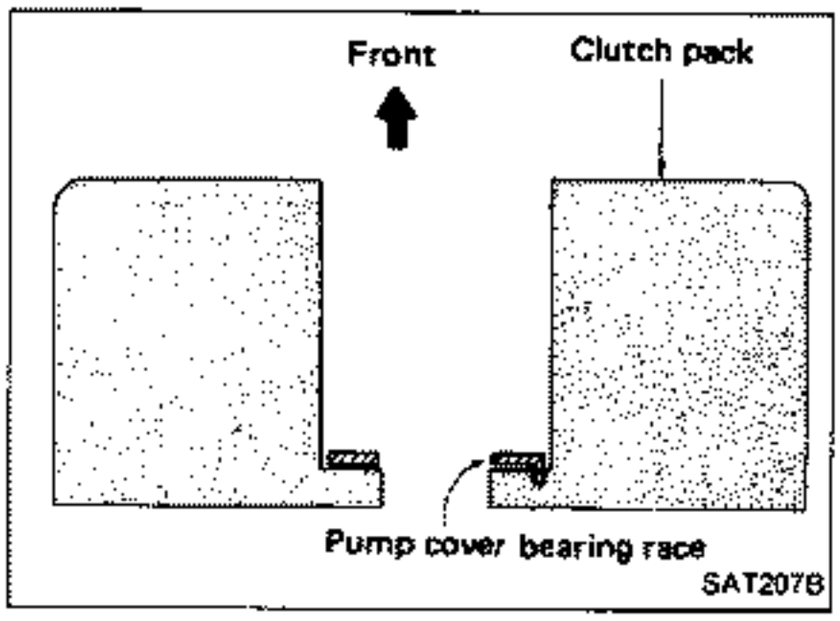

b. Install pump cover bearing race on clutch pack.

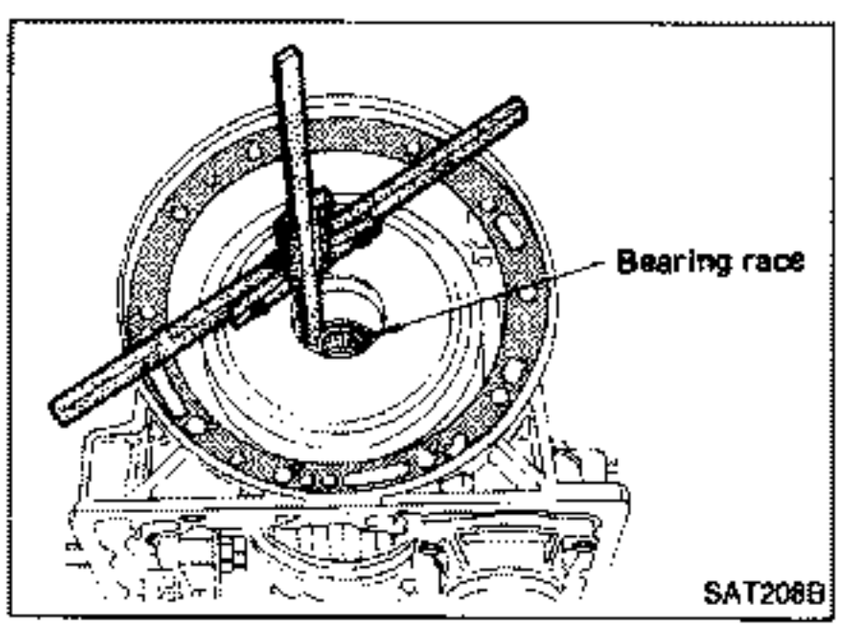

c. Measure distance "B" between front end of transmission case and oil pump cover bearing race.

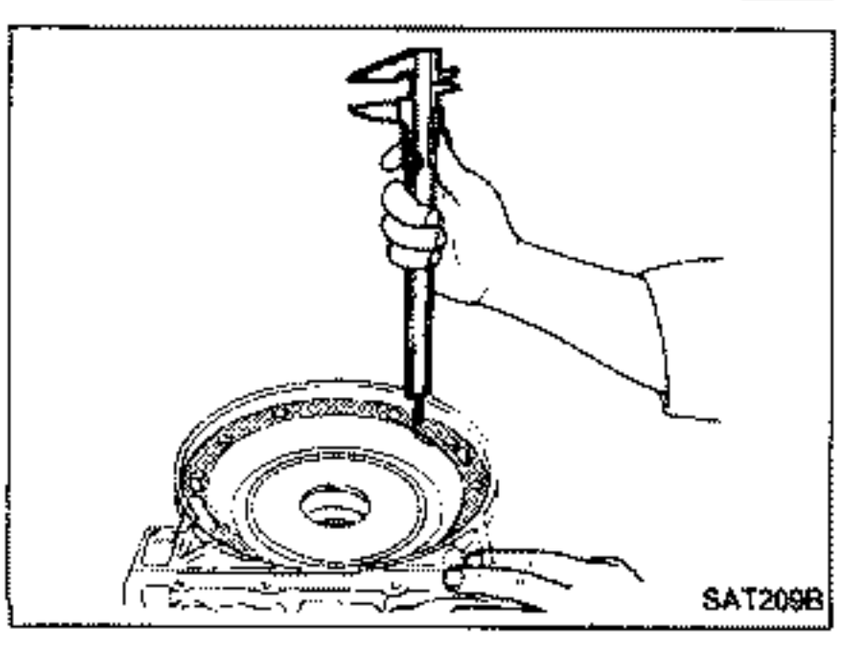

d. Measure distance "C" between front end of transmission case and oil pump gasket.

Adjustment (Cont'd)

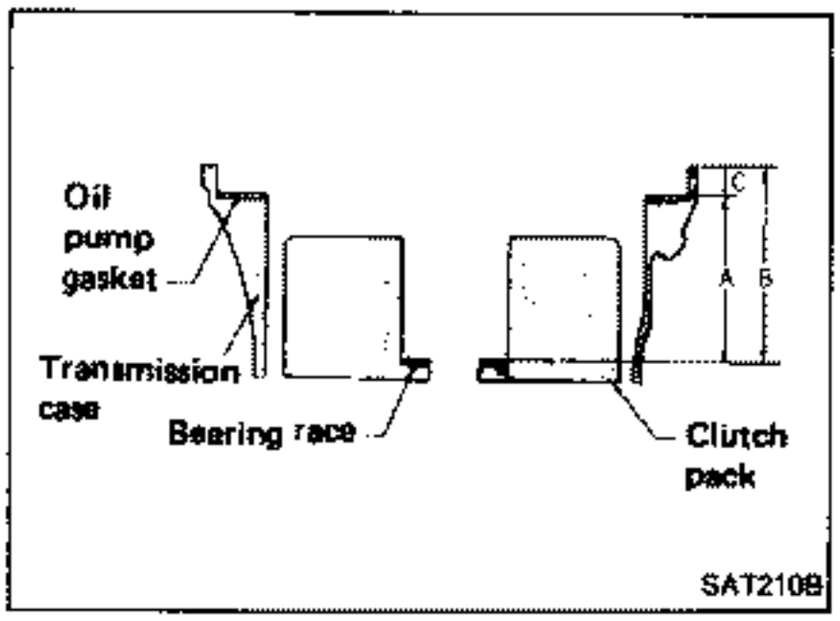

e. Determine dimension "A" by using the following equation.
A = B – C

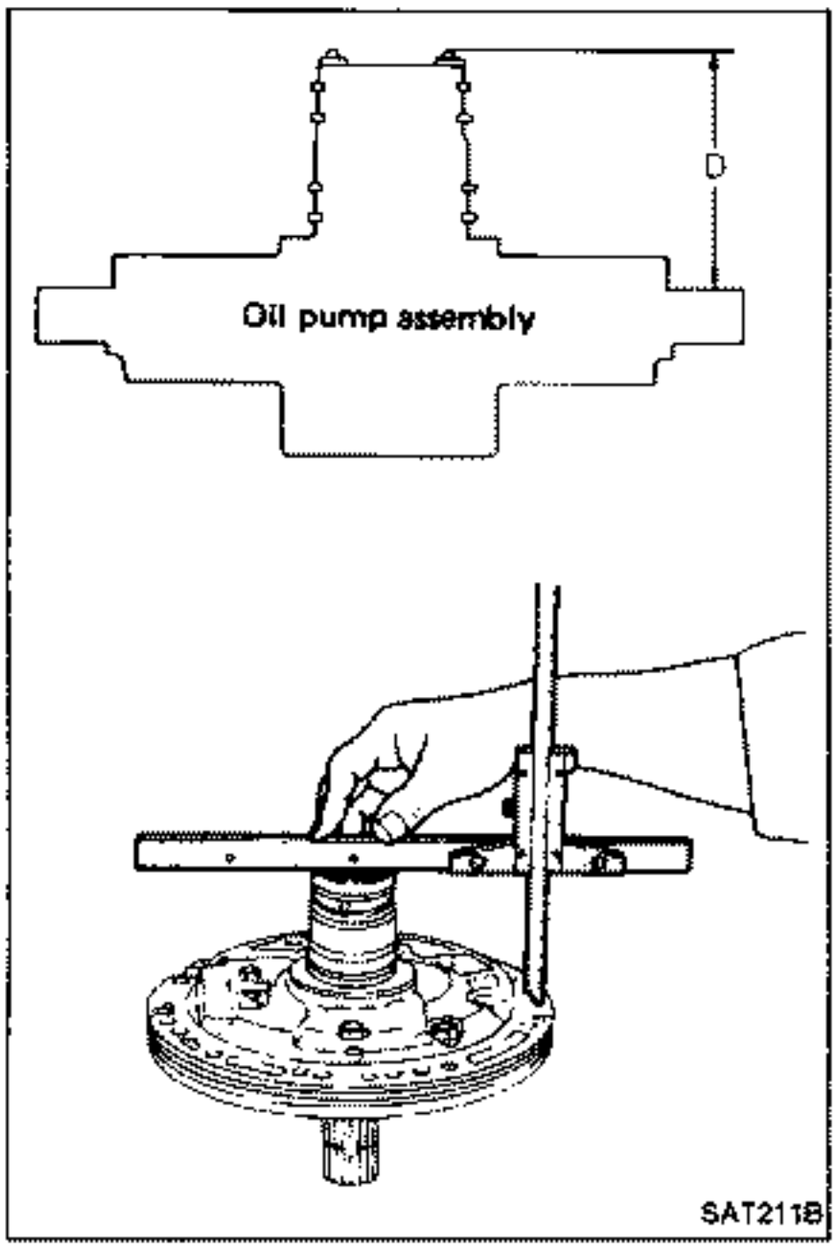

f. Install needle bearing on oil pump assembly.
g. Measure distance "D" between needle bearing and machined surface of oil pump cover assembly.

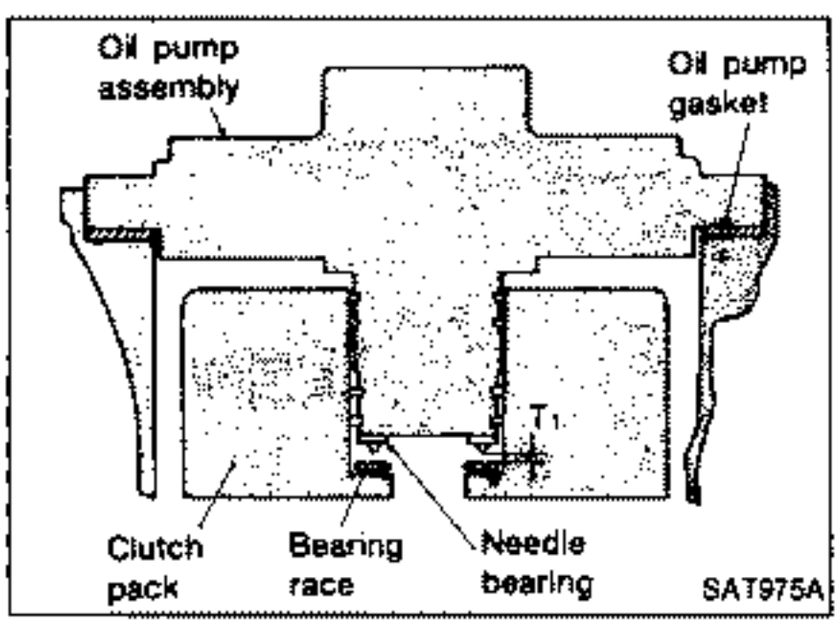

h. Determine total end play "T_1" by using the following equation.
T_1 = A – D – 0.1
Total end play "T_1":
0.25 - 0.55 mm (0.0098 - 0.0217 in)

- If end play is out of specification, decrease or increase thickness of oil pump cover bearing race as necessary.
Available oil pump cover bearing race:
Refer to S.D.S.

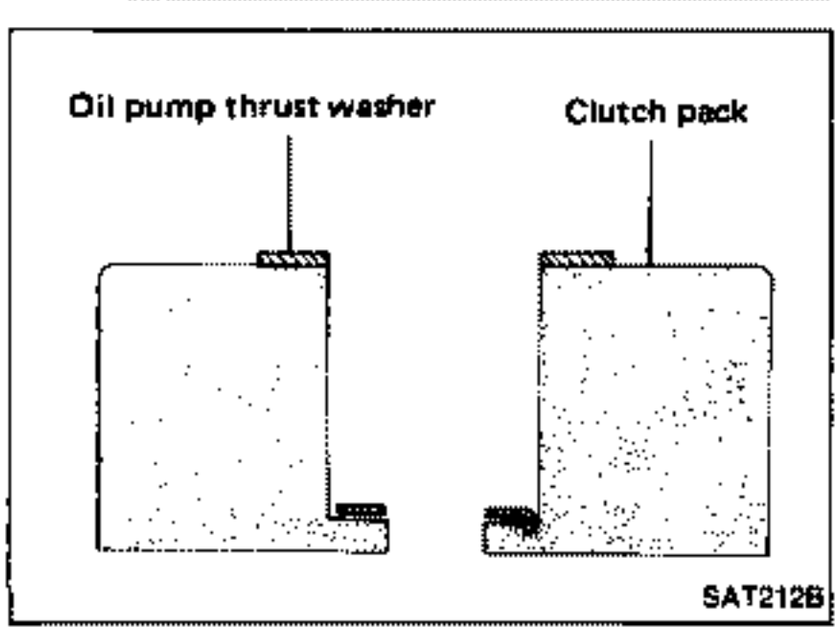

3. Adjust reverse clutch drum end play.
a. Install oil pump thrust washer on clutch pack.

Adjustment (Cont'd)

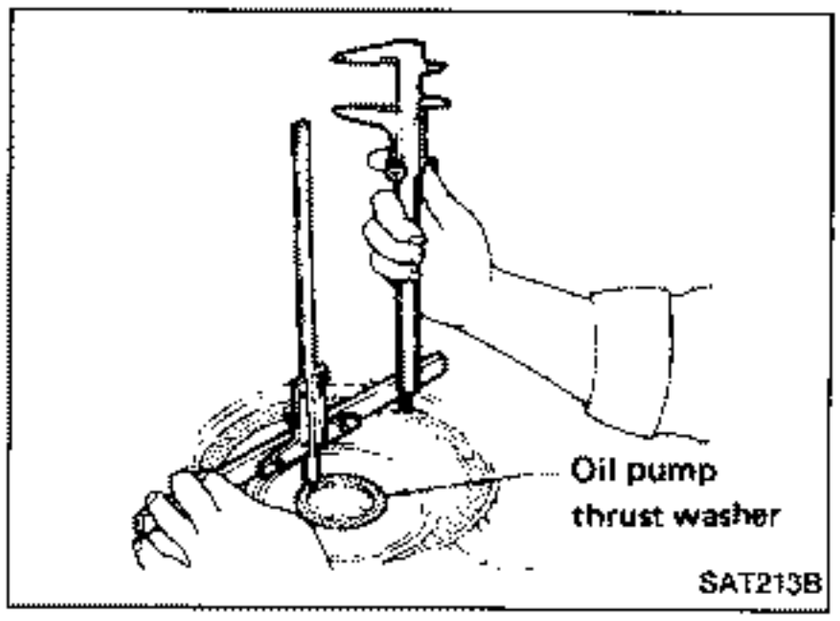

b. Measure distance "F" between front end of transmission case and oil pump thrust washer.
c. Measure distance "G" between front end of transmission case and gasket.

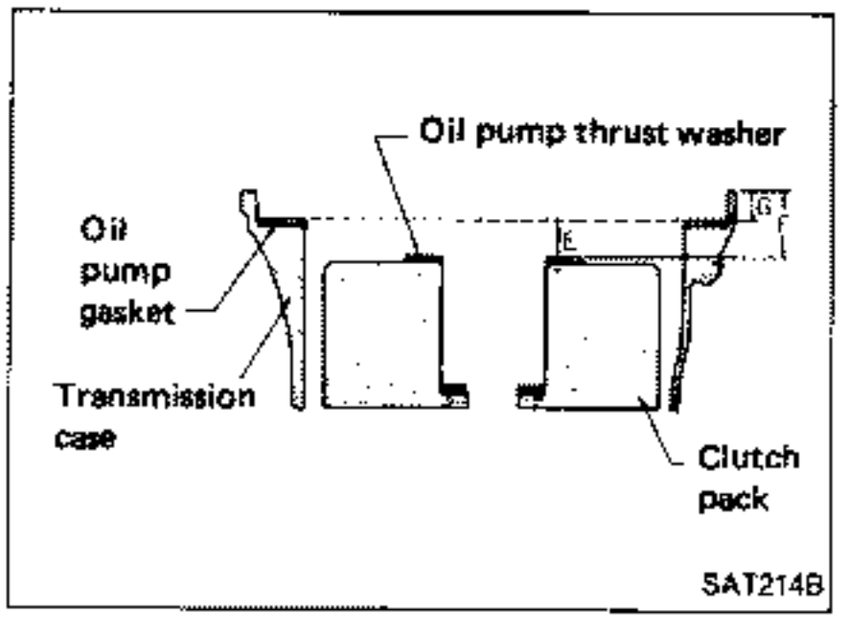

d. Determine dimension "E" by using the following equation.
E = F – G

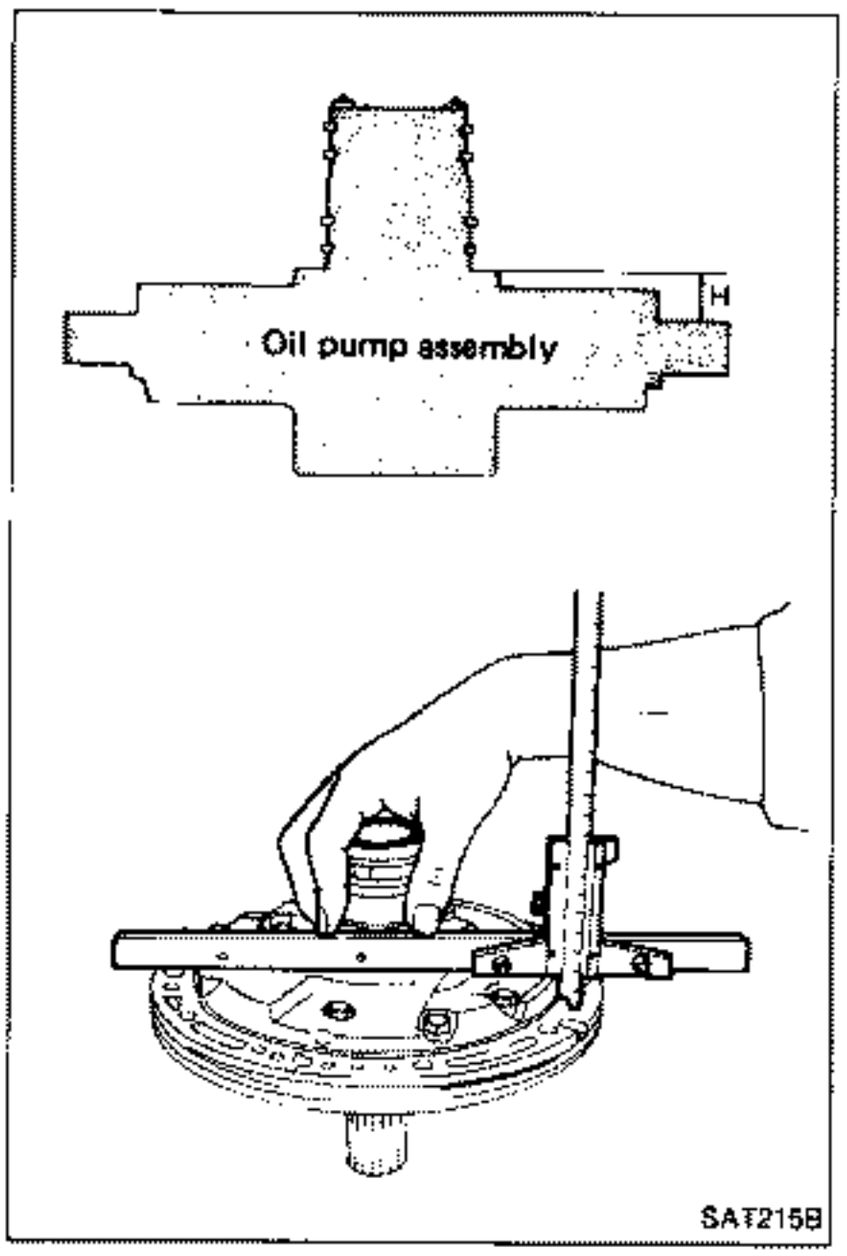

e. Measure distance "H".

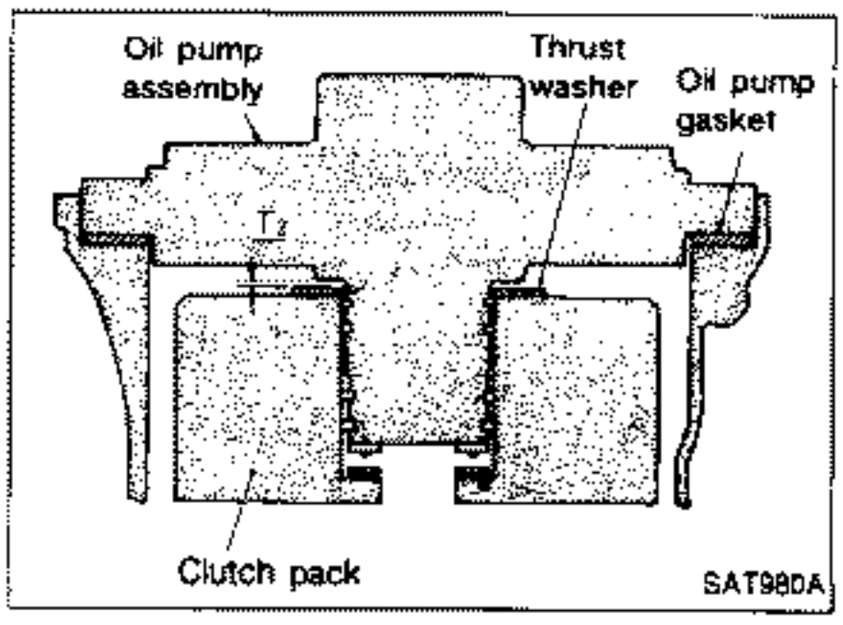

f. Determine reverse clutch drum end play "T_2" by using the following equation.
T_2 = E – H – 0.1
Reverse clutch drum end play "T_2":
0.55 - 0.90 mm (0.0217 - 0.0354 in)

- If end play is out of specification, decrease or increase thickness of oil pump thrust washer as necessary.
Available oil pump thrust washer:
Refer to S.D.S.

4. Remove any part installed to adjust end plays.

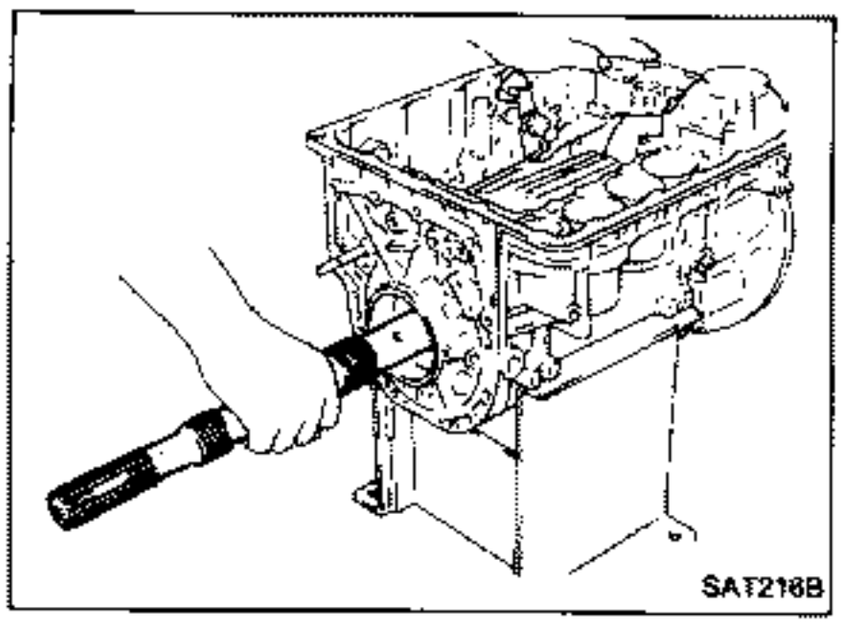

Assembly

1. Install output shaft and parking gear.

a. Insert output shaft from rear of transmission case while slightly lifting front internal gear.

- **Do not force output shaft against front of transmission case.**

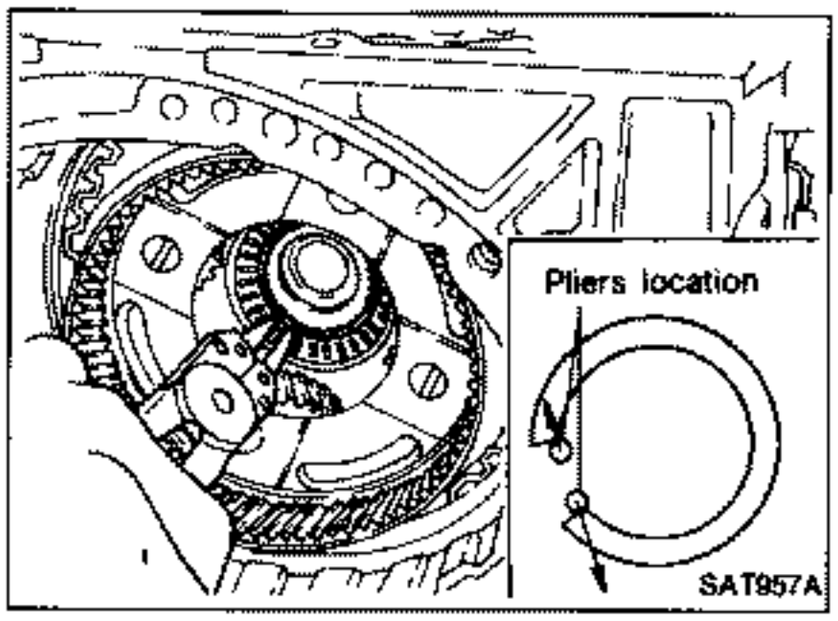

b. Carefully push output shaft against front of transmission case. Install snap ring on front of output shaft.

- **Check to be sure output shaft cannot be removed in rear direction.**

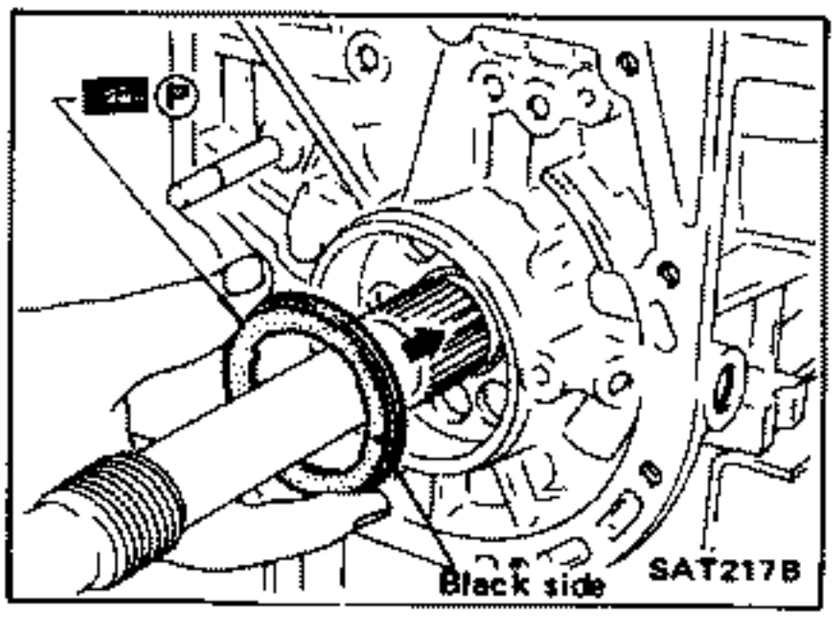

c. Install needle bearing on transmission case.

- **Pay attention to its direction — Black side goes to rear.**
- **Apply petroleum jelly to needle bearing.**

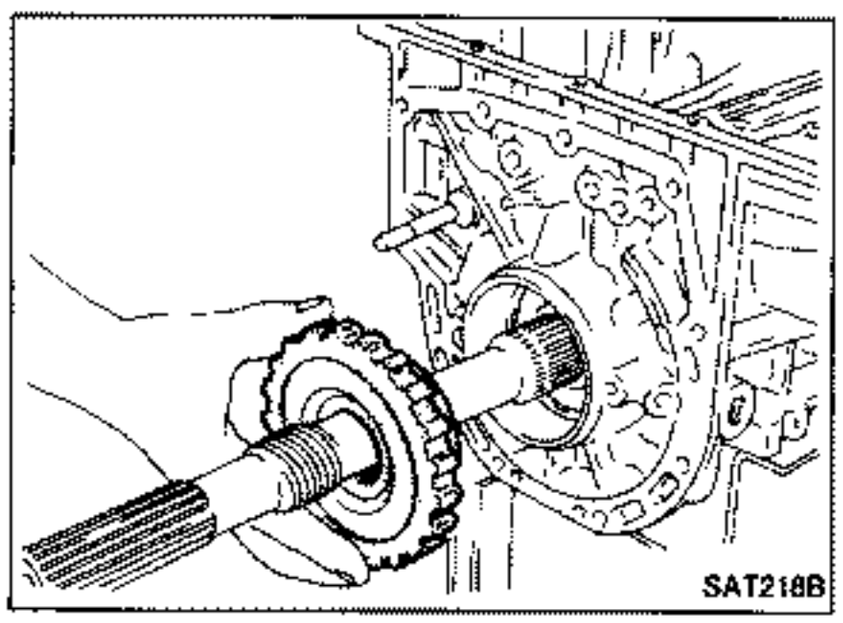

d. Install parking gear on transmission case.

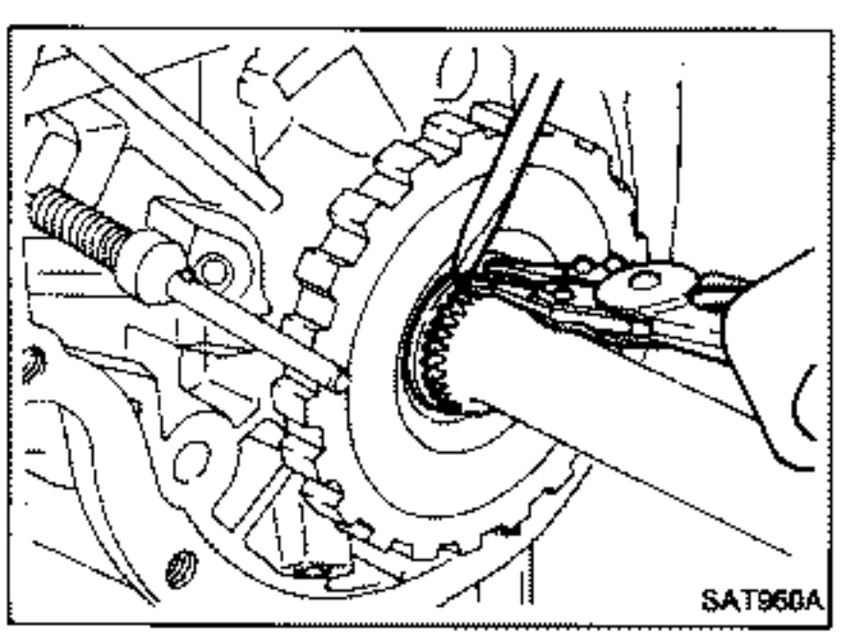

e. Install snap ring on rear of output shaft.

- **Check to be sure output shaft cannot be removed in forward direction.**

Assembly (Cont'd)

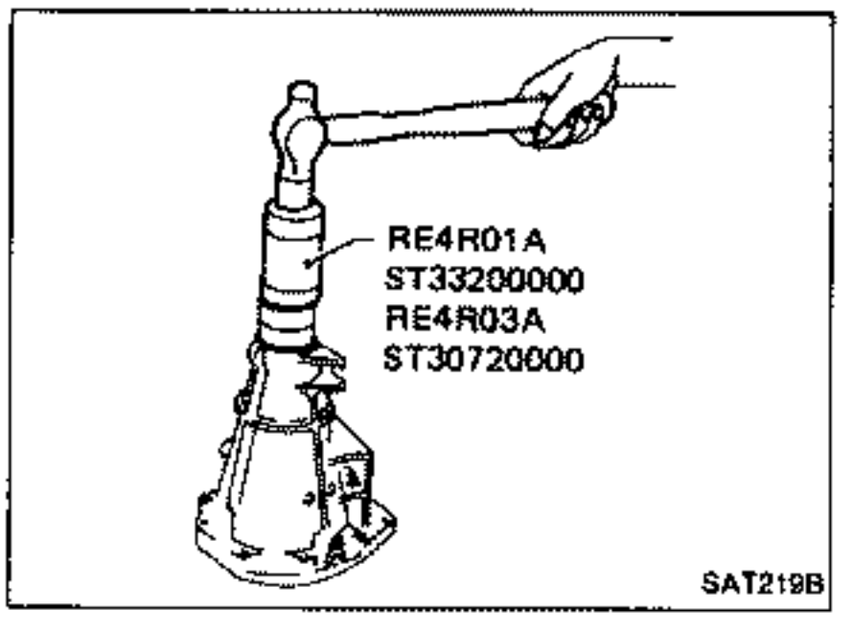

2. Install rear extension.
a. Install oil seal on rear extension.
- **Apply A.T.F. to oil seal.**

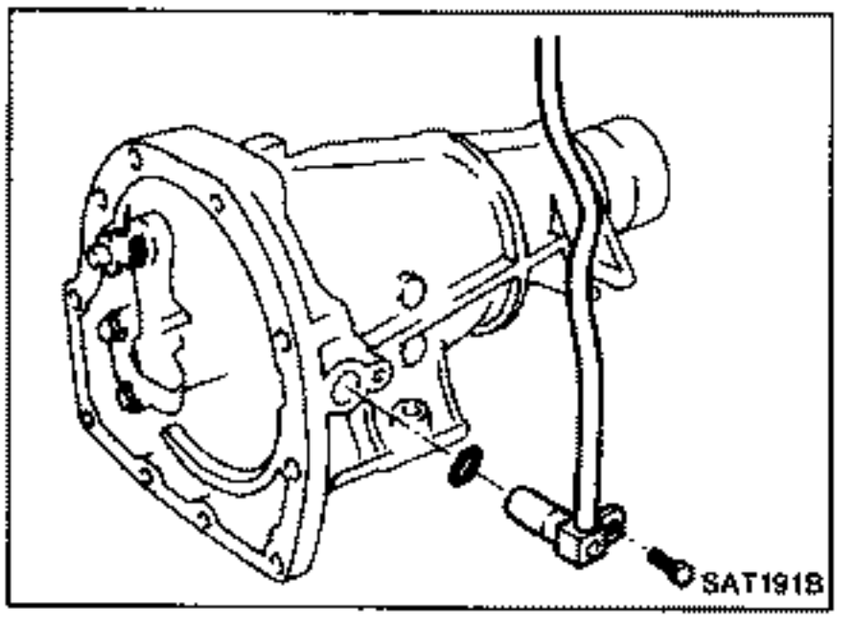

b. Install O-ring on revolution sensor.
- **Apply A.T.F. to O-ring.**

c. Install revolution sensor on rear extension.

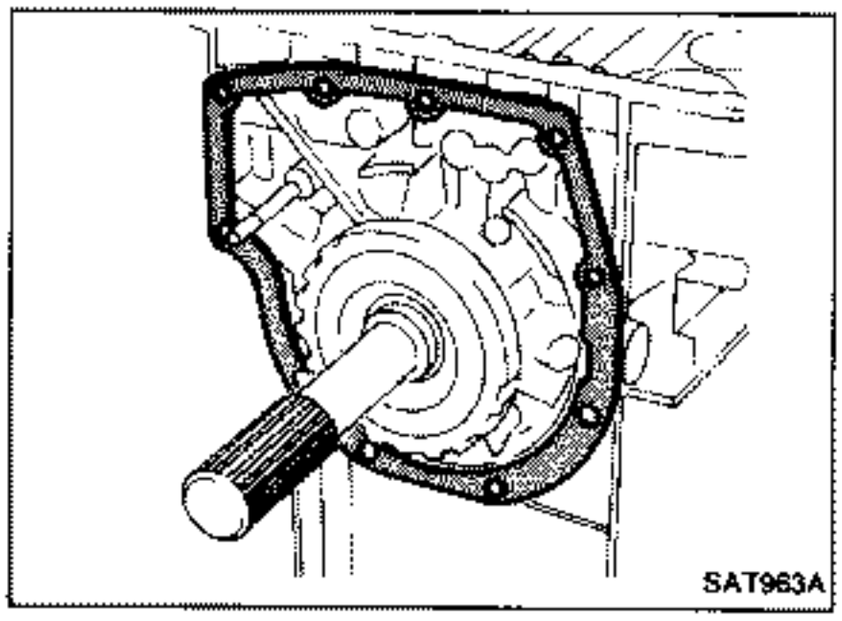

d. Install rear extension gasket on transmission case.

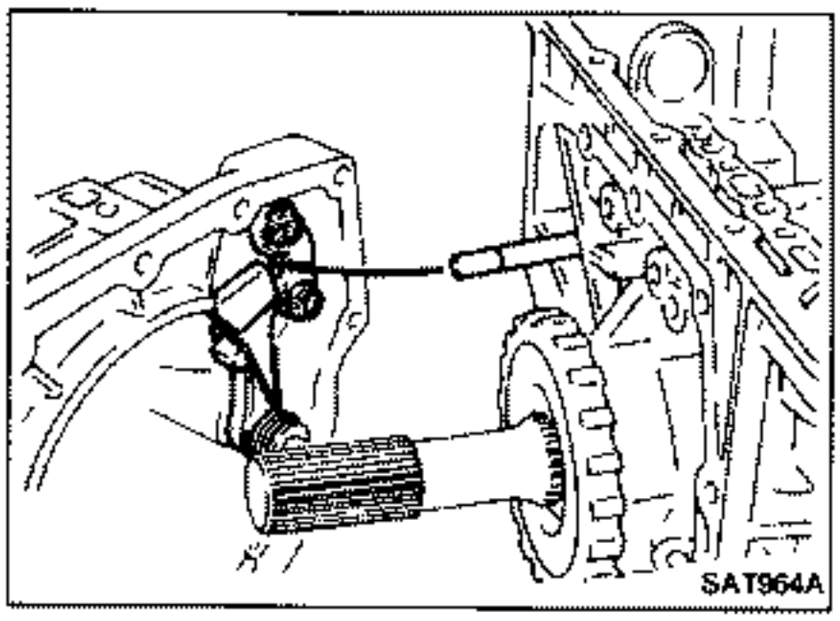

e. Install parking rod on transmission case.

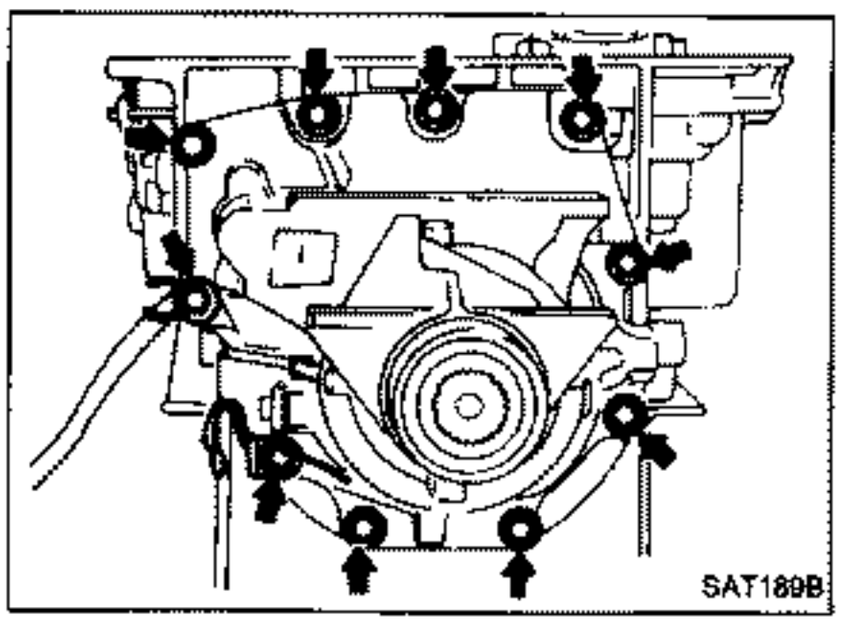

f. Install rear extension on transmission case.

Assembly (Cont'd)

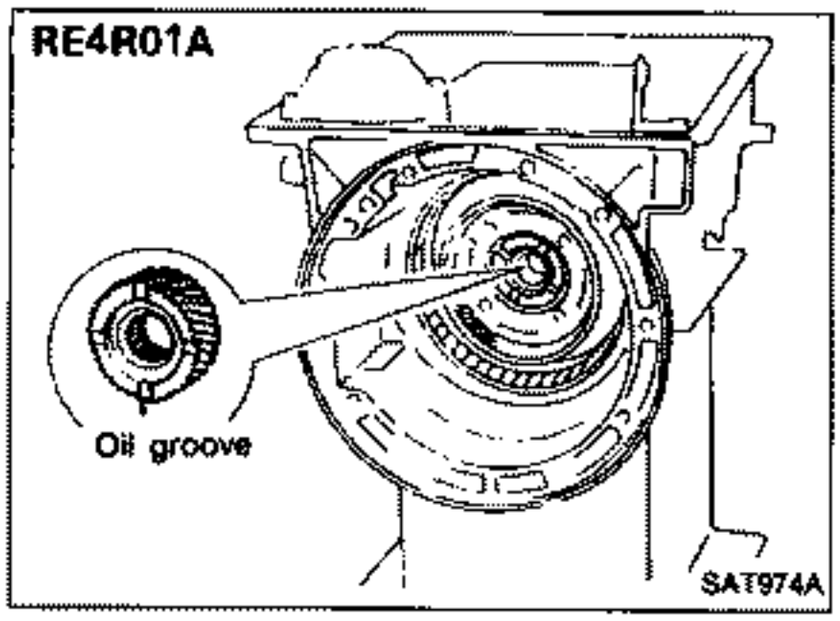

3. Install front side clutch and gear components.
a. Install rear sun gear on transmission case.

- **Pay attention to its direction.**

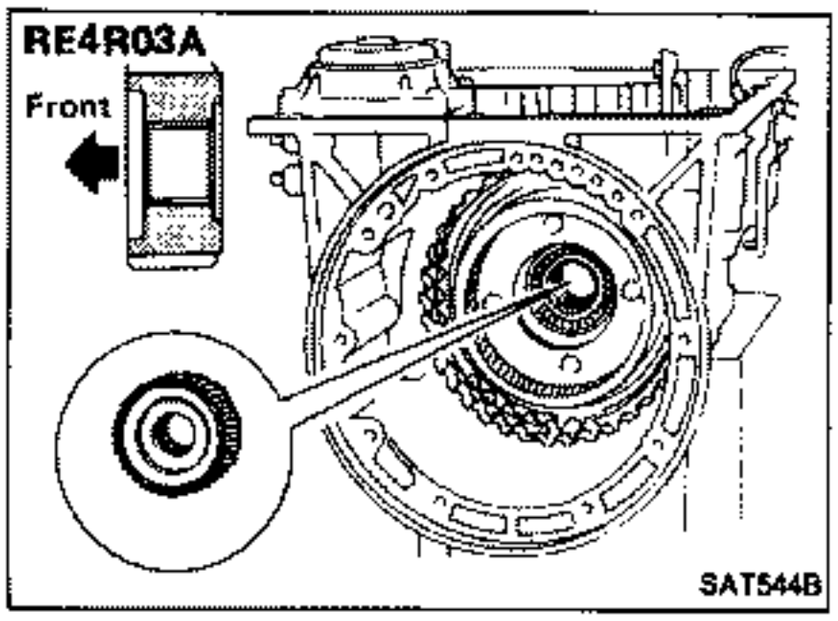

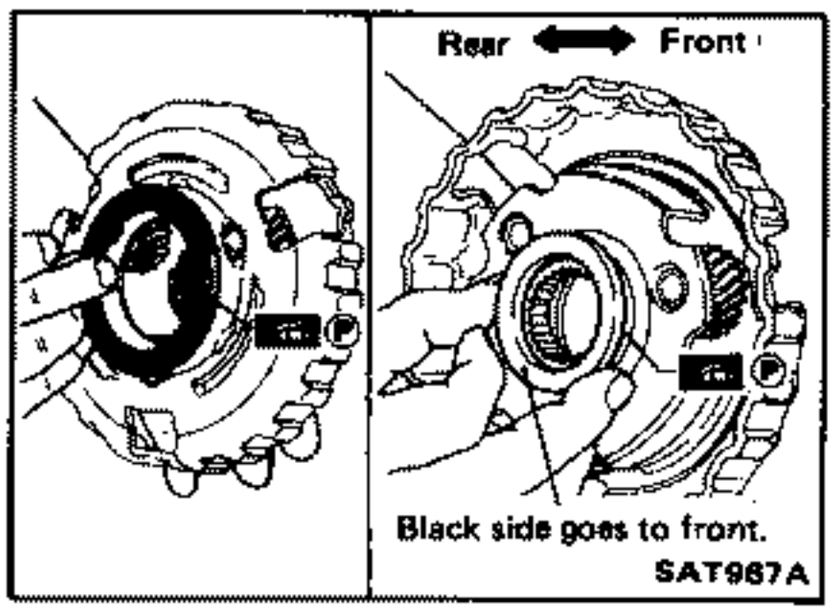

b. Make sure needle bearing is on front of front planetary carrier.

- **Apply petroleum jelly to needle bearing.**

c. Make sure needle bearing is on rear of front planetary carrier.

- **Apply petroleum jelly to bearing.**
- **Pay attention to its direction — Black side goes to front.**

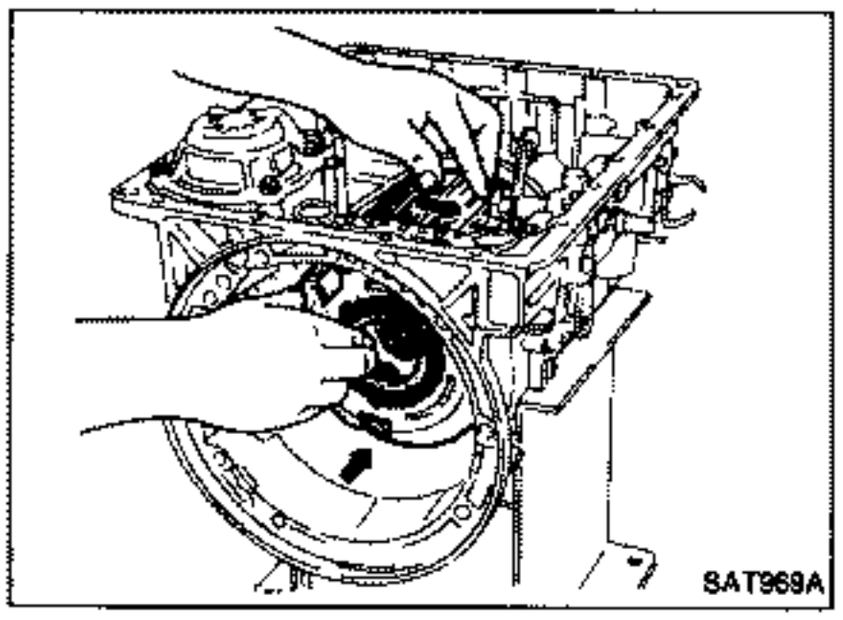

d. While rotating forward clutch drum clockwise, install front planetary carrier on forward clutch drum.

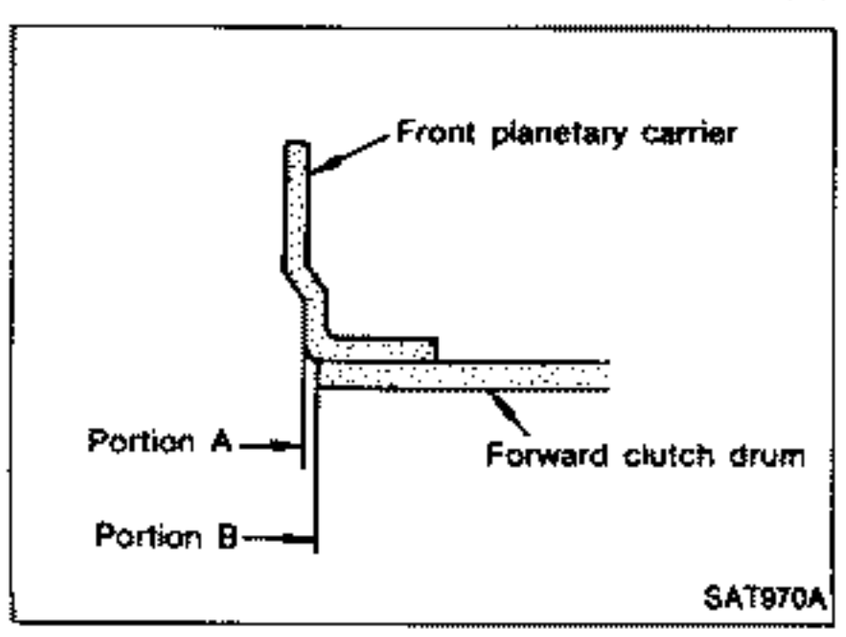

- **Check that portion A of front planetary carrier protrudes approximately 2 mm (0.08 in) beyond portion B of forward clutch assembly. (RE4R01A only)**

Assembly (Cont'd)

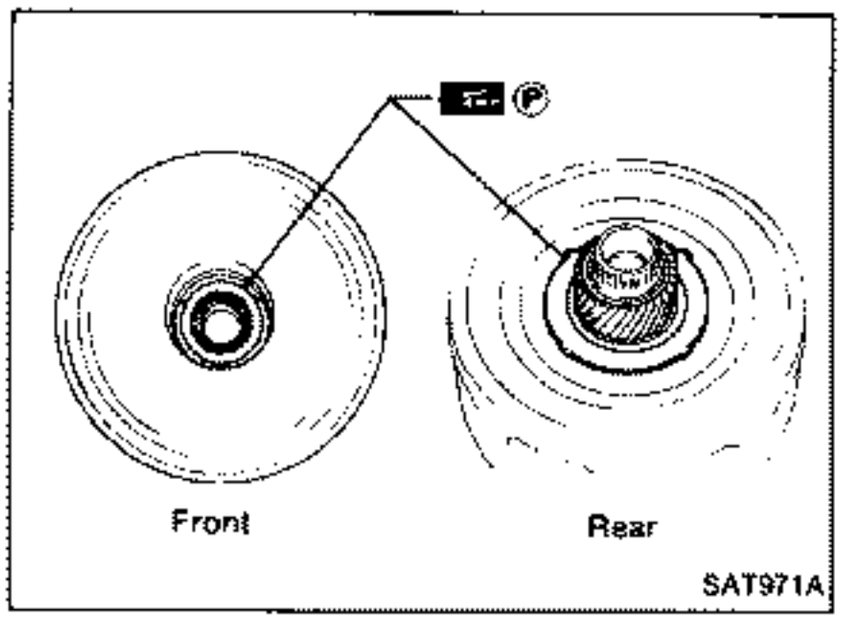

e. Make sure bearing race (RE4R01A) or needle bearing (RE4R03A) are on front and rear of clutch pack.

- **Apply petroleum jelly to bearing races.**
- **Securely engage pawls of bearing races with holes in clutch pack.**

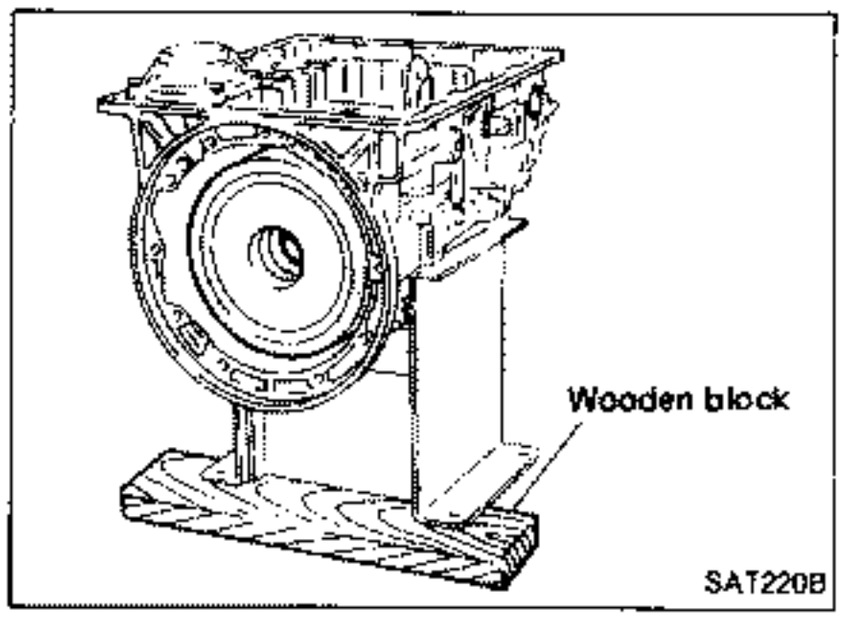

f. Install clutch pack into transmission case.

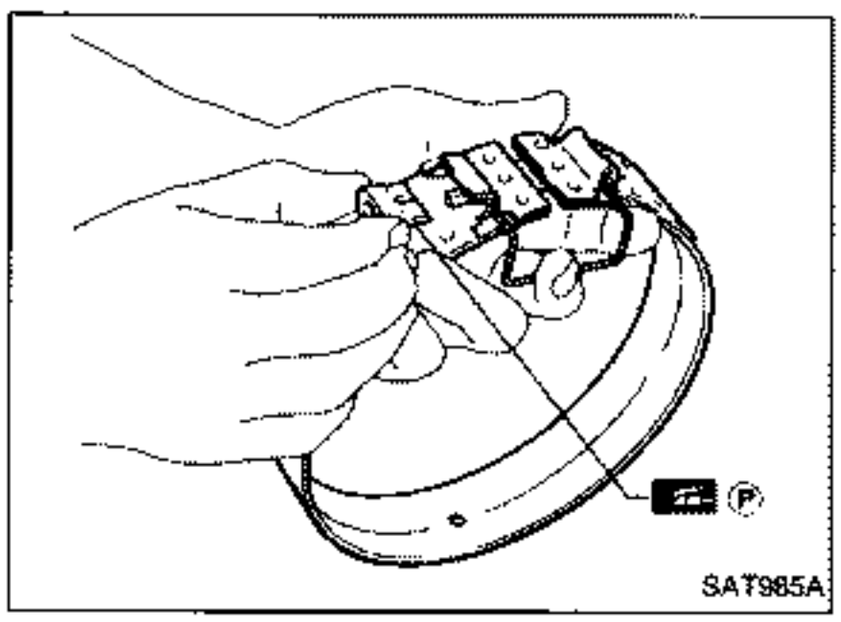

4. Install brake band and band strut.
a. Install band strut on brake band.

- **Apply petroleum jelly to band strut.**

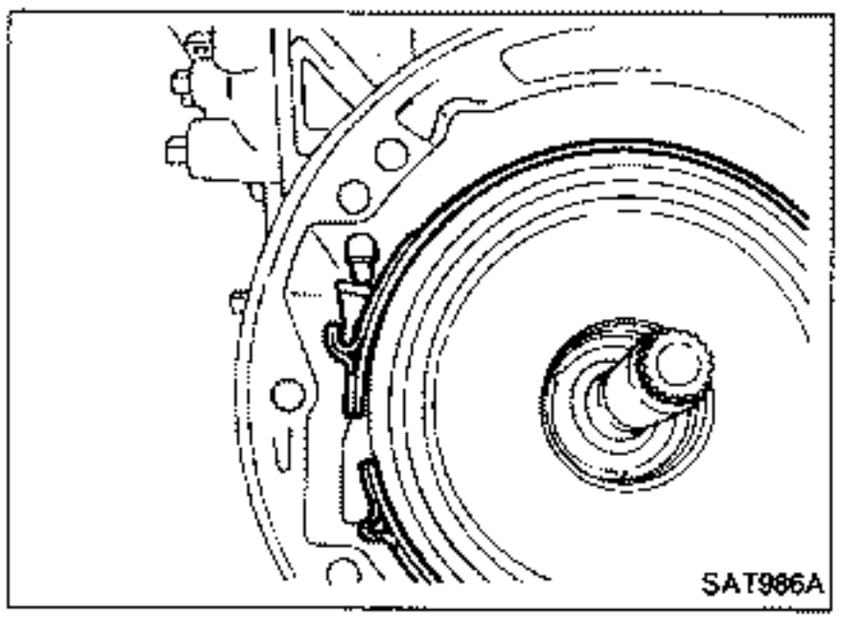

b. Place brake band on periphery of reverse clutch drum, and insert band strut into end of band servo piston stem.

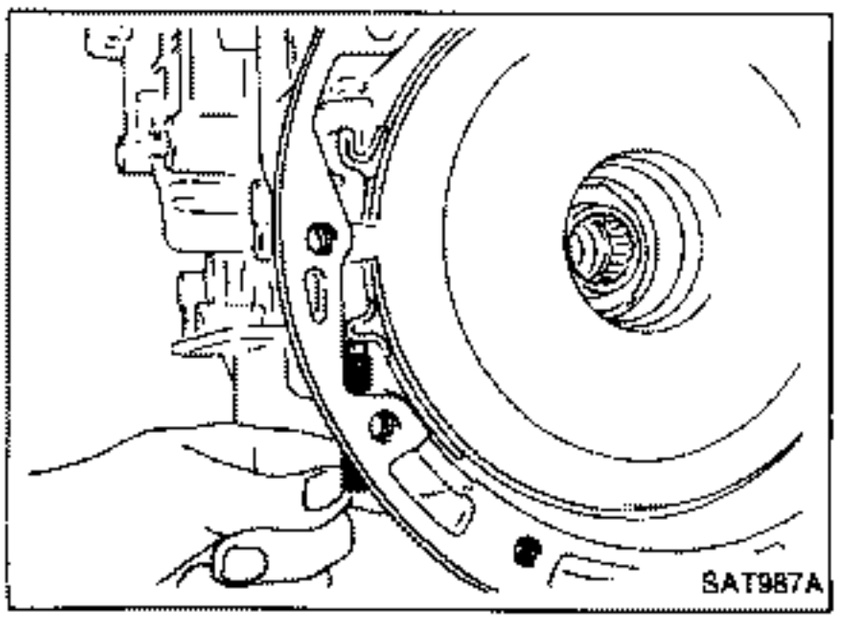

c. Install anchor end bolt on transmission case. Then, tighten anchor end bolt just enough so that reverse clutch drum (clutch pack) will not tilt forward.

Assembly (Cont'd)

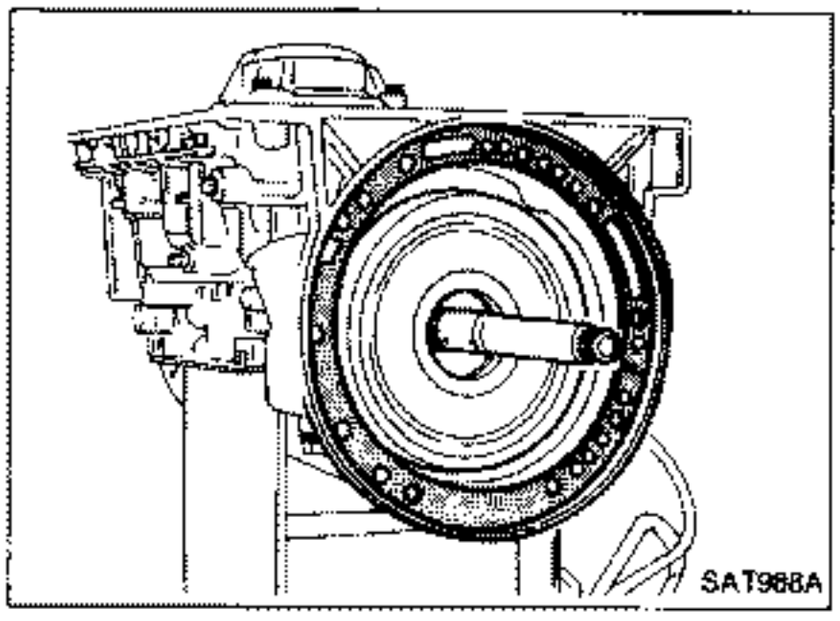

5. Install input shaft on transmission case.
- **Pay attention to its direction — O-ring groove side is front.**
6. Install gasket on transmission case.

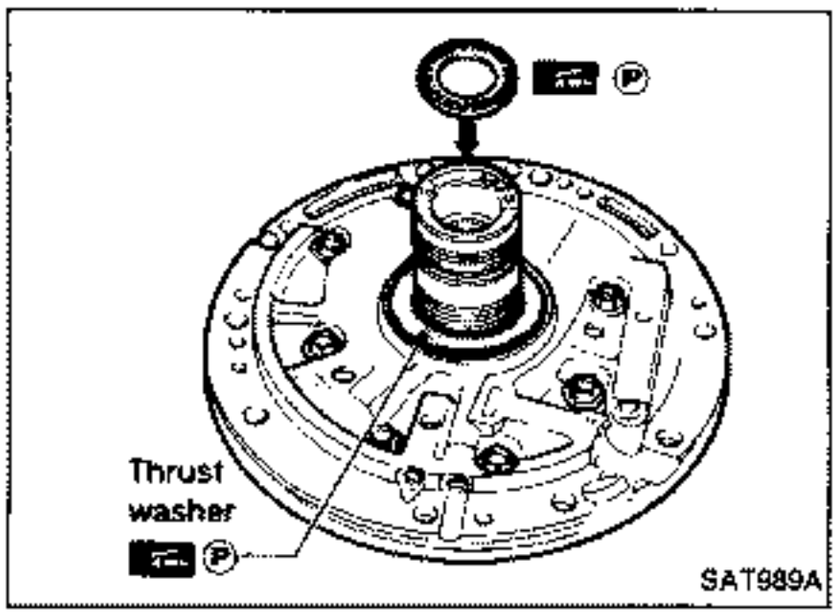

7. Install oil pump assembly.
a. Install needle bearing on oil pump assembly.
- **Apply petroleum jelly to the needle bearing.**
b. Install selected thrust washer on oil pump assembly.
- **Apply petroleum jelly to thrust washer.**

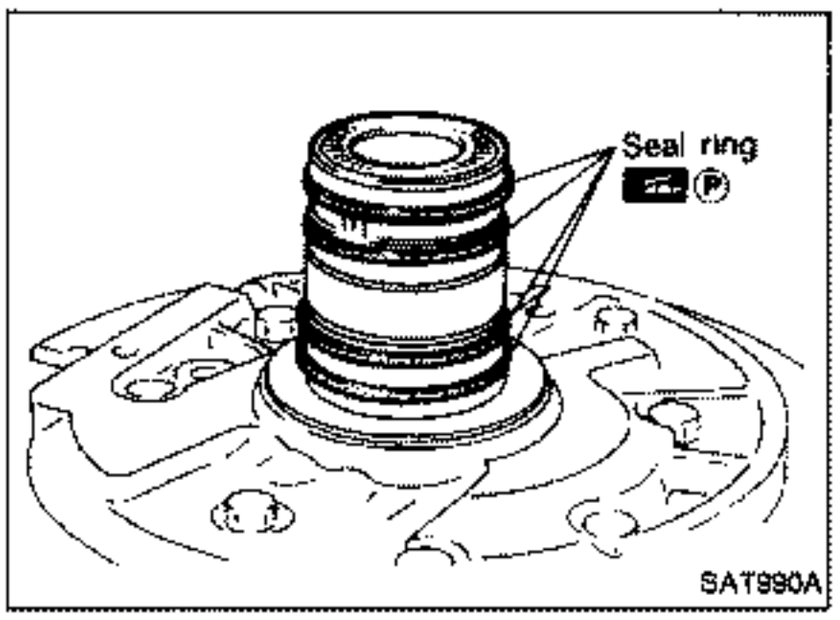

c. Carefully install seal rings into grooves and press them into the petroleum jelly so that they are a tight fit.

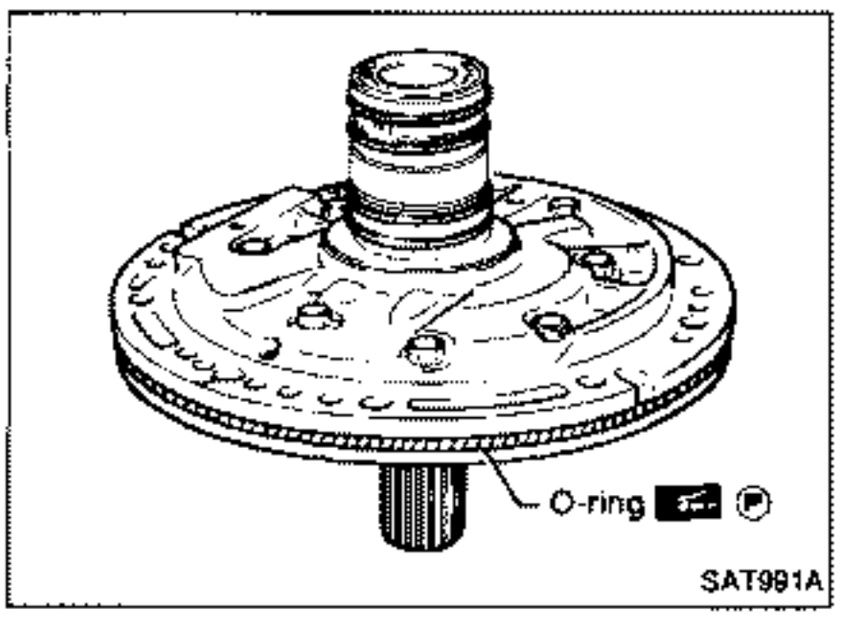

d. Install O-ring on oil pump assembly.
- **Apply petroleum jelly to O-ring.**

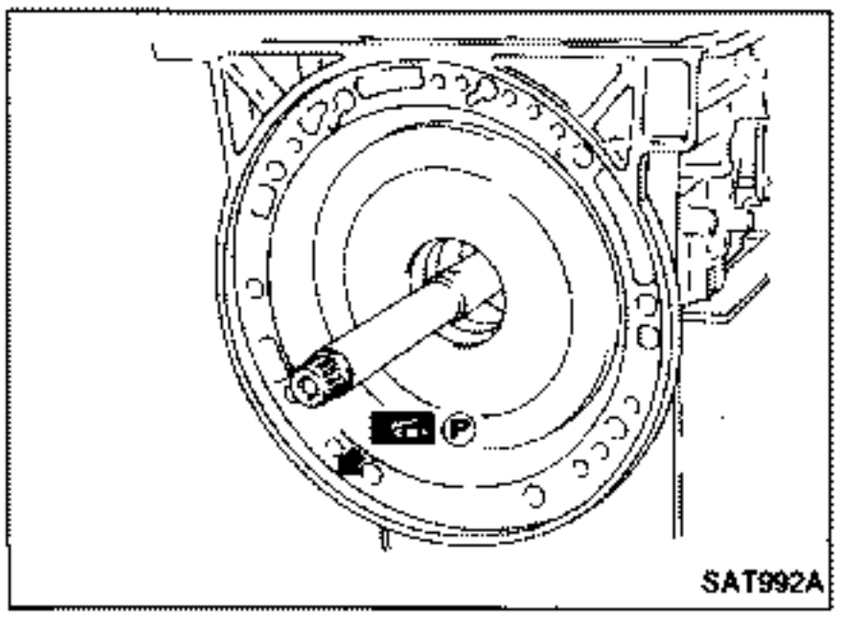

e. Apply petroleum jelly to mating surface of transmission case and oil pump assembly.

Assembly (Cont'd)

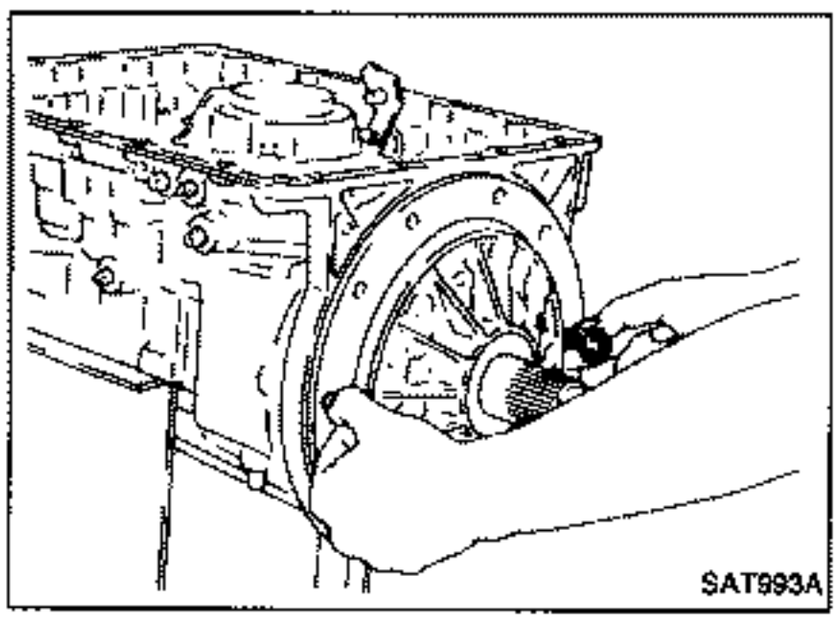

f. Install oil pump assembly.

- **Install two converter housing securing bolts in bolt holes in oil pump assembly as guides.**

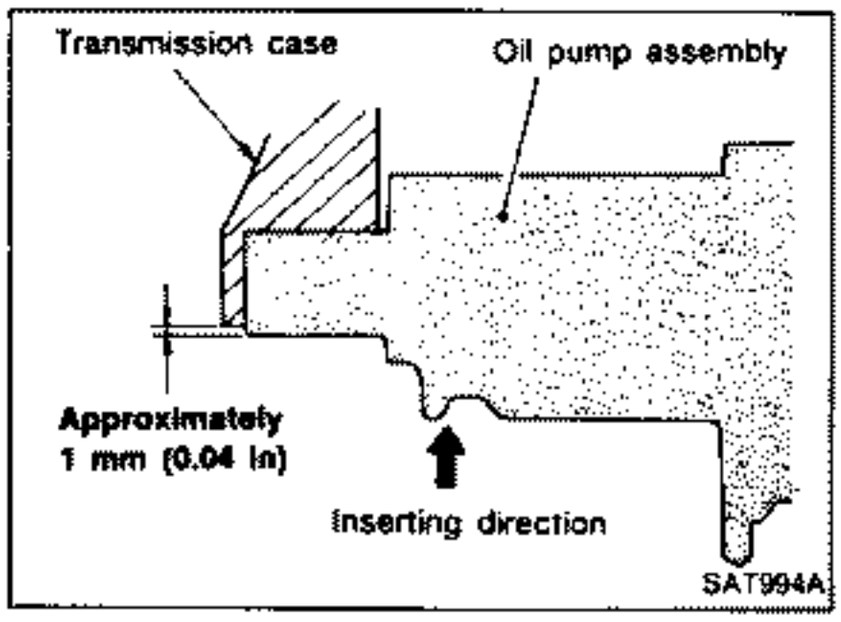

- **Insert oil pump assembly to the specified position in transmission, as shown at left.**

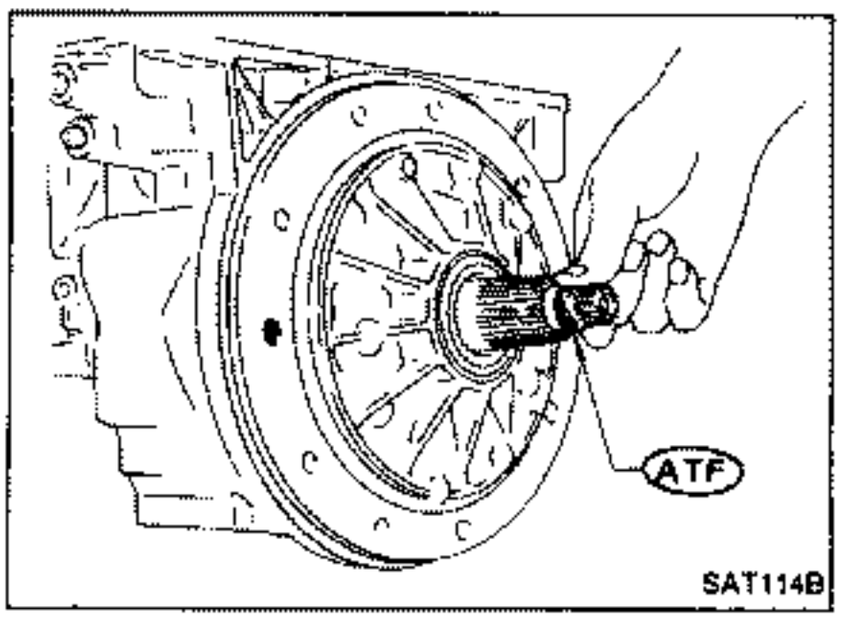

8. Install O-ring on input shaft.

- **Apply A.T.F. to O-rings.**

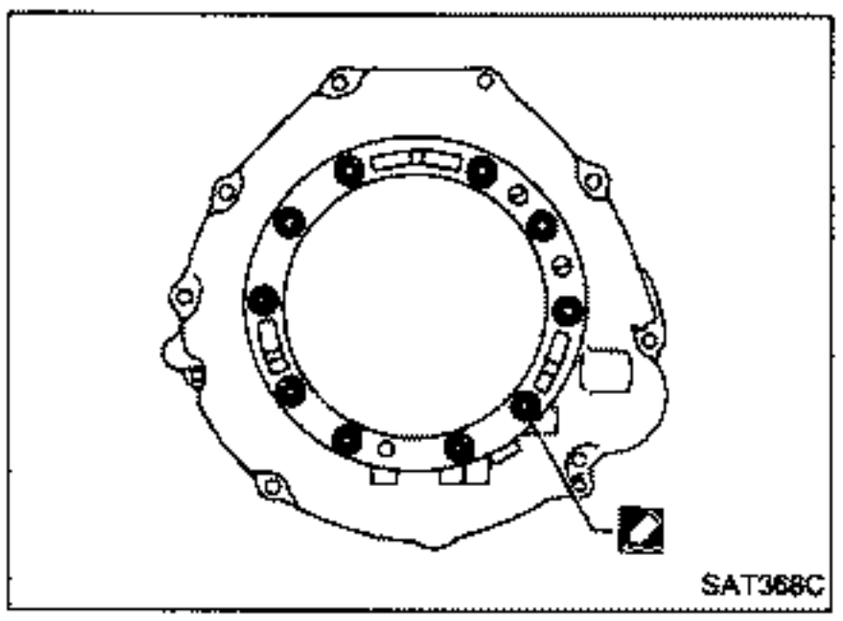

9. Install converter housing.

a. Apply recommended sealant (Nissan genuine part: KP610-00250 or equivalent) to outer periphery of bolt holes in converter housing.

- **Do not apply too much sealant.**

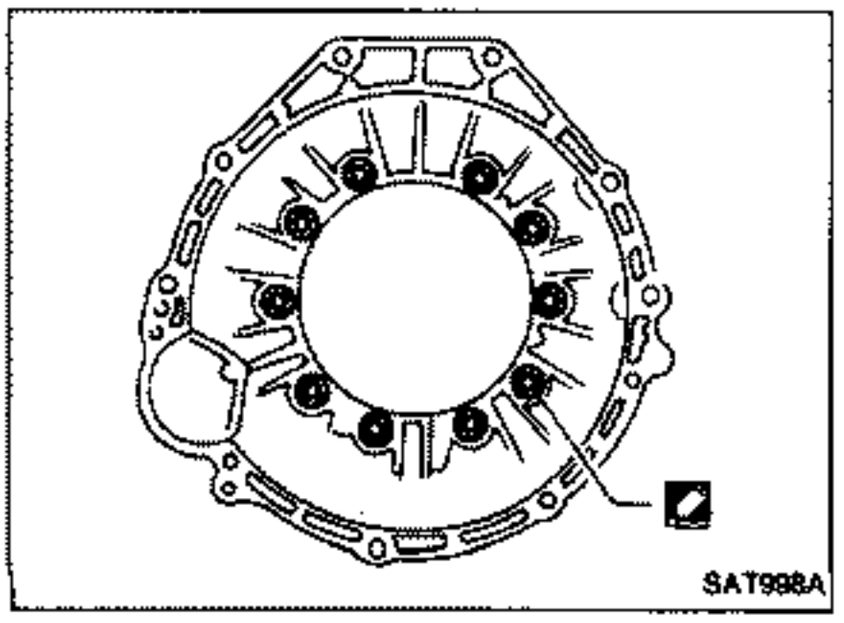

b. Apply recommended sealant (Nissan genuine part: KP610-00250 or equivalent) to seating surfaces of bolts that secure front of converter housing.

Assembly (Cont'd)

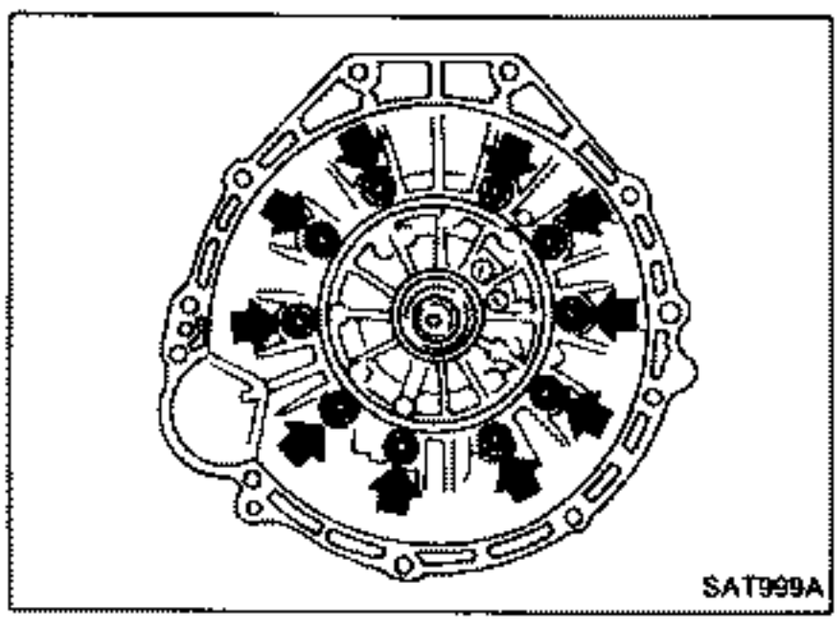

c. Install converter housing on transmission case.

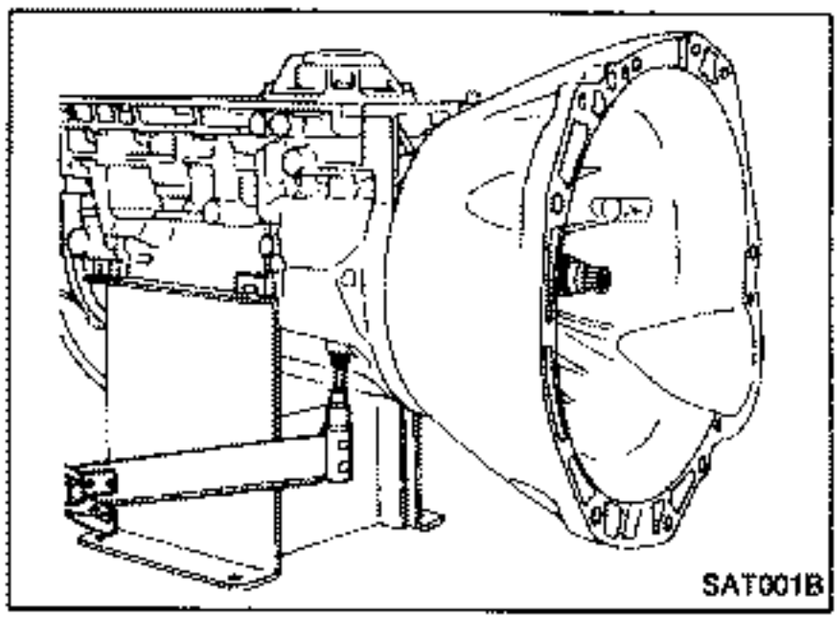

10. Adjust brake band.
a. Tighten anchor end bolt to specified torque.

Anchor end bolt:

: 4 - 6 N·m

(0.4 - 0.6 kg-m, 2.9 - 4.3 ft-lb)

b. Back off anchor end bolt two and a half turns.

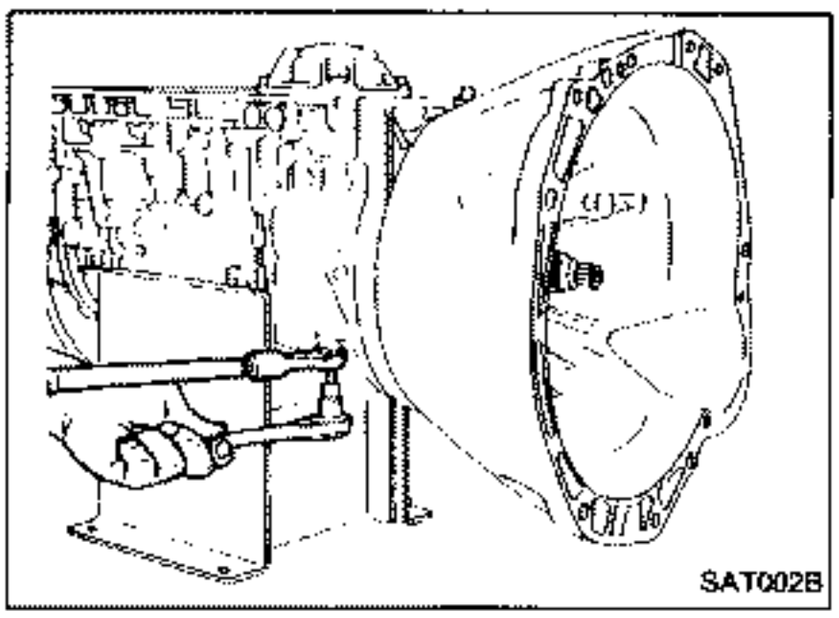

c. While holding anchor end pin, tighten lock nut.

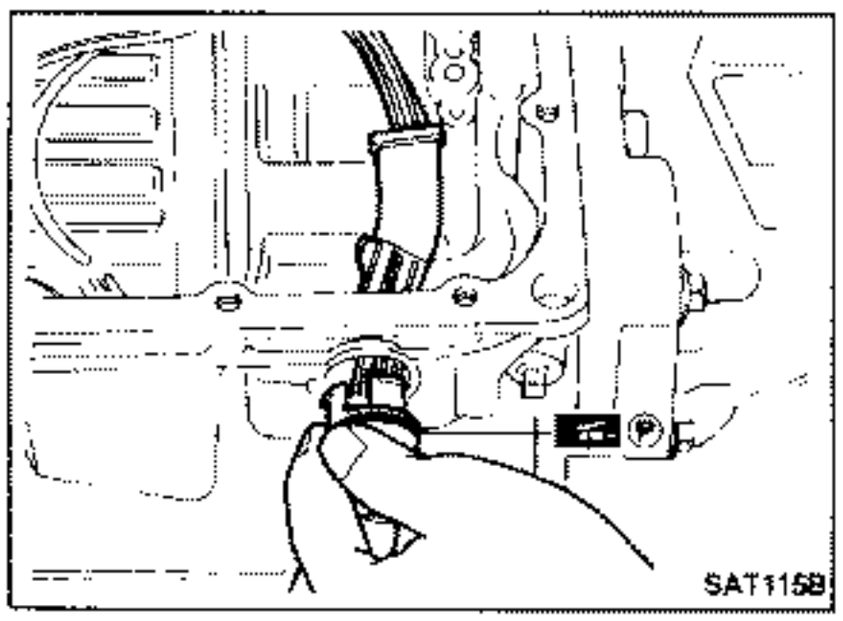

11. Install terminal cord assembly.
a. Install O-ring on terminal cord assembly.

- **Apply petroleum jelly to O-ring.**

b. Compress terminal cord assembly stopper and install terminal cord assembly on transmission case.

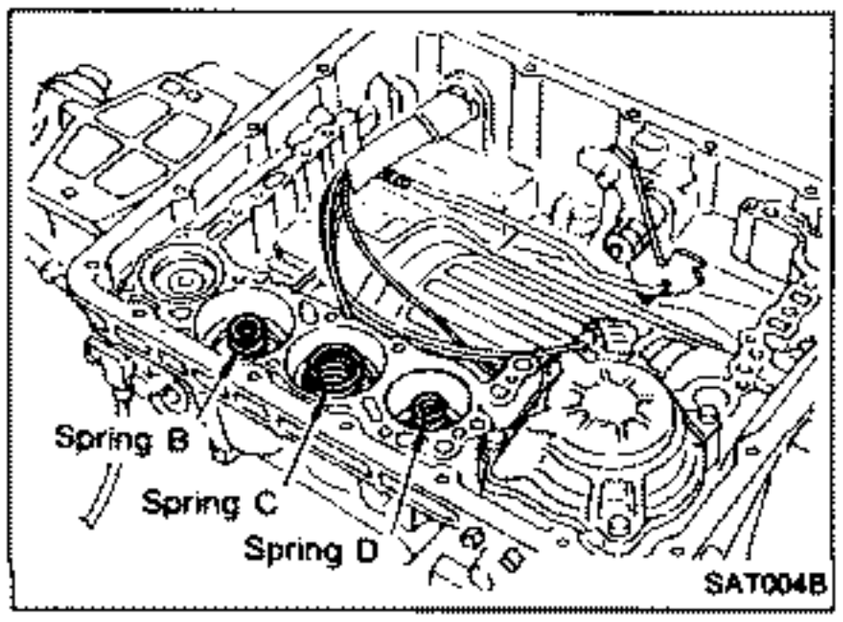

12. Install control valve assembly.
a. Install accumulator piston return springs B, C and D.

Free length of return springs:

Unit: mm (in)

Item \ Accumulator	B	C	D
Free length	66 (2.60)	45 (1.77)	58.4 (2.299)

Assembly (Cont'd)

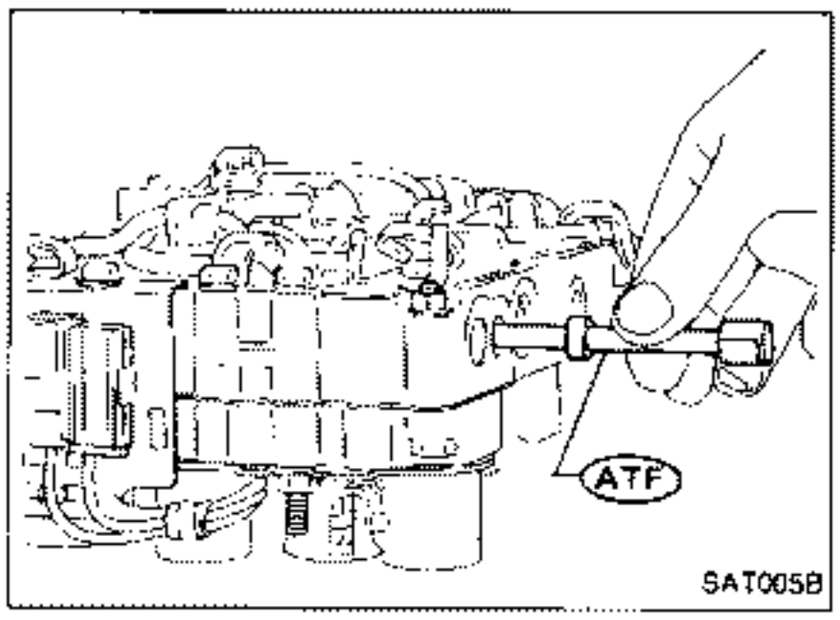

b. Install manual valve on control valve.

- **Apply A.T.F. to manual valve.**

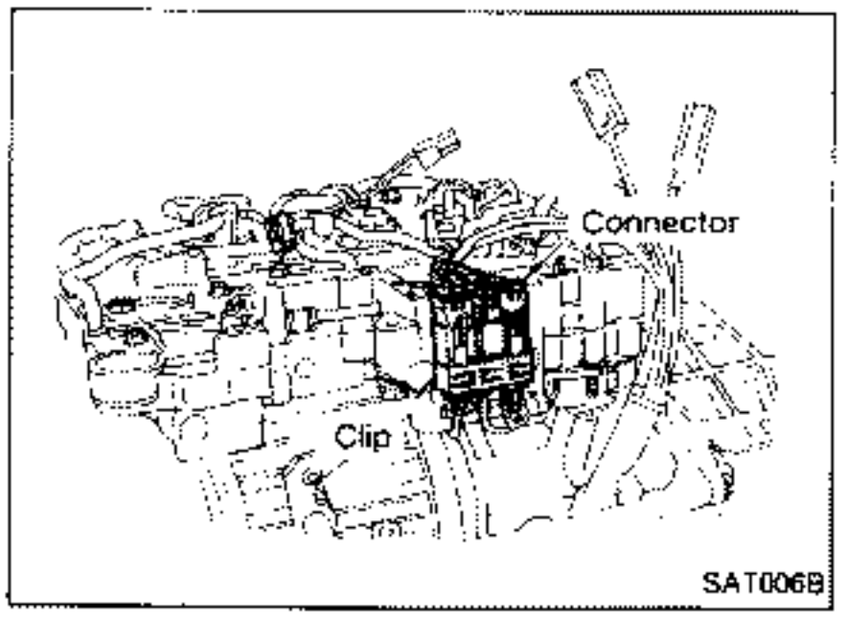

c. Place control valve assembly on transmission case. Connect solenoid connector for upper body.
d. Install connector clip.

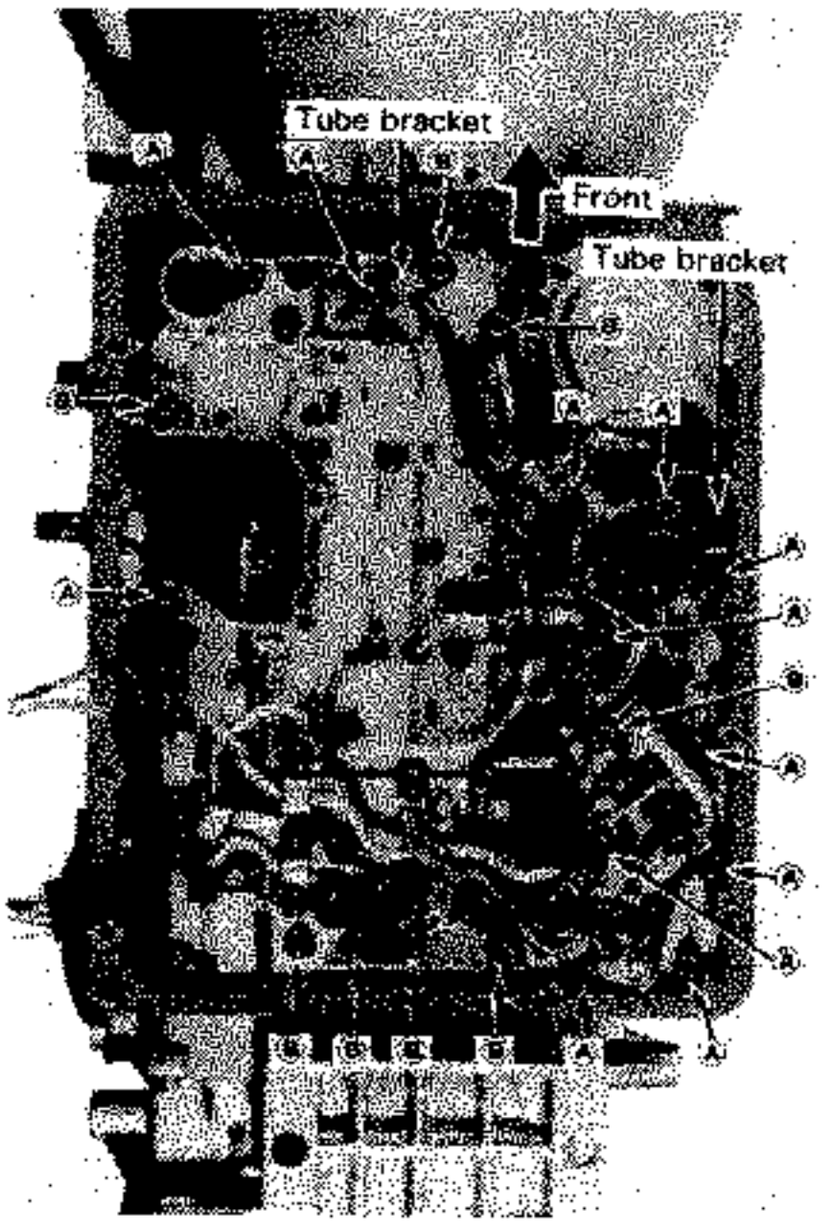

e. Install control valve assembly on transmission case.
f. Install connector tube brackets and tighten bolts Ⓐ and Ⓑ.

- **Check that terminal assembly harness does not catch.**

Bolt symbol	ℓ mm (in)
Ⓐ	33 (1.30)
Ⓑ	45 (1.77)

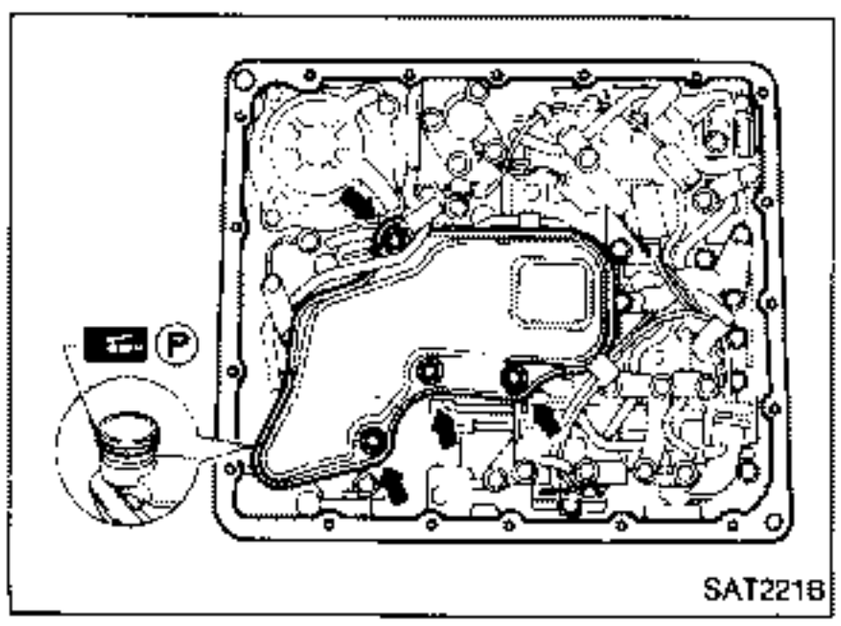

g. Install O-ring on oil strainer.

- **Apply petroleum jelly to O-ring.**

h. Install oil strainer on control valve.

Assembly (Cont'd)

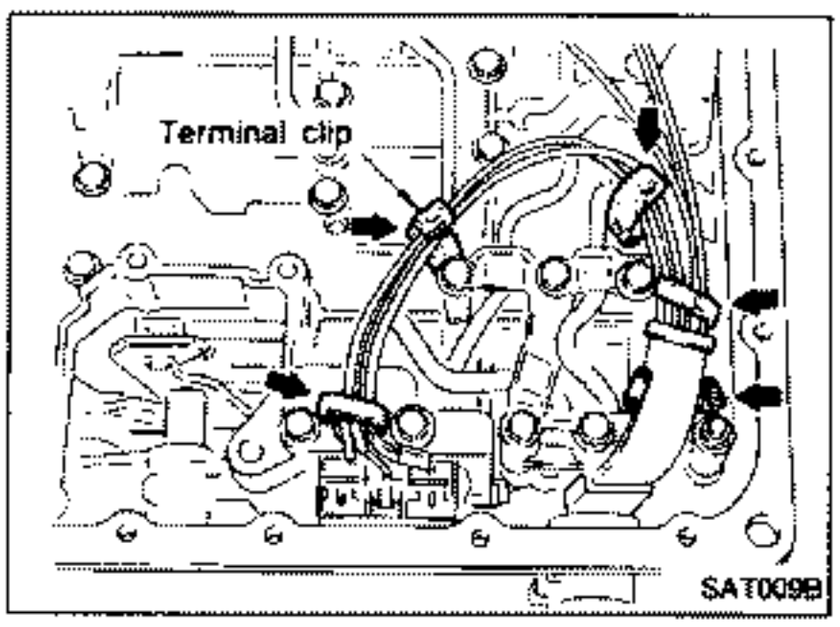

i. Securely fasten terminal harness with clips.

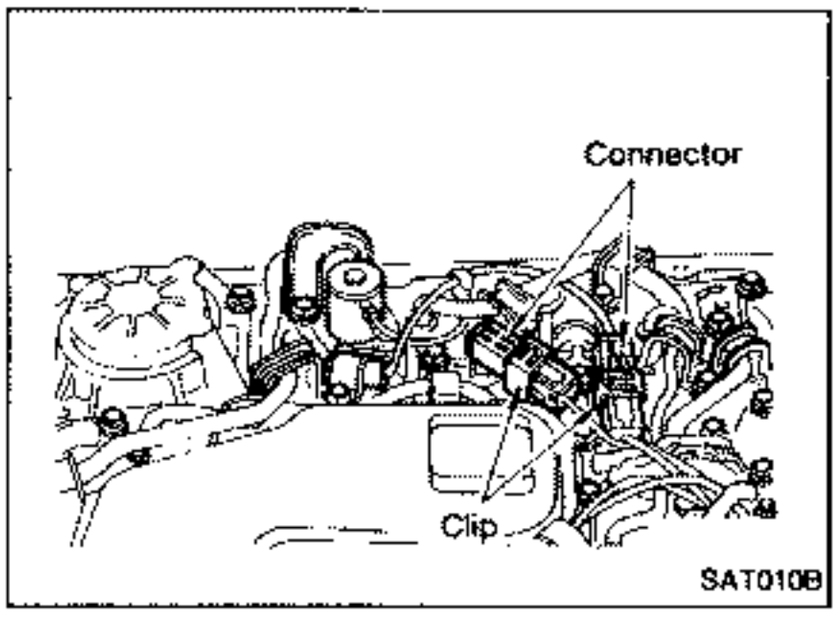

j. Install lock-up solenoid and fluid temperature sensor connectors.

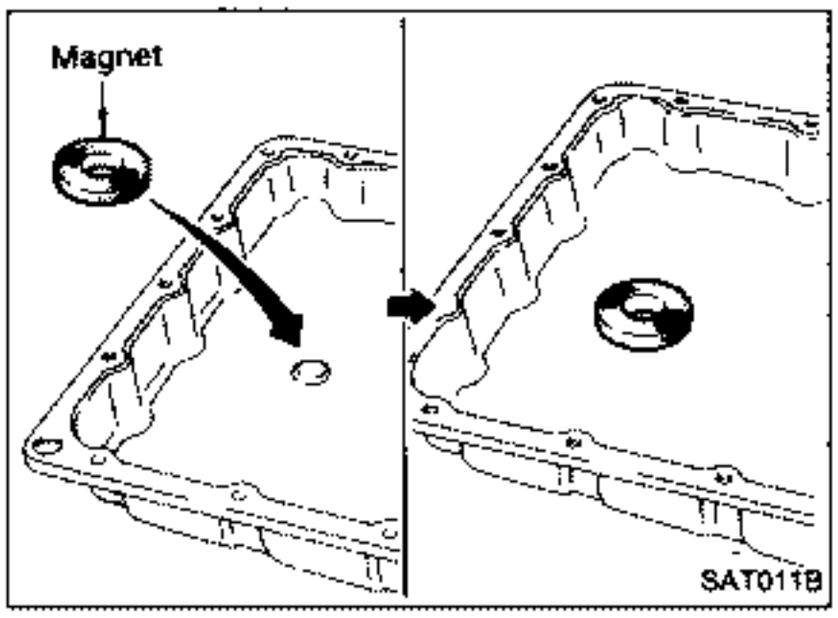

13. Install oil pan.
a. Attach a magnet to oil pan.

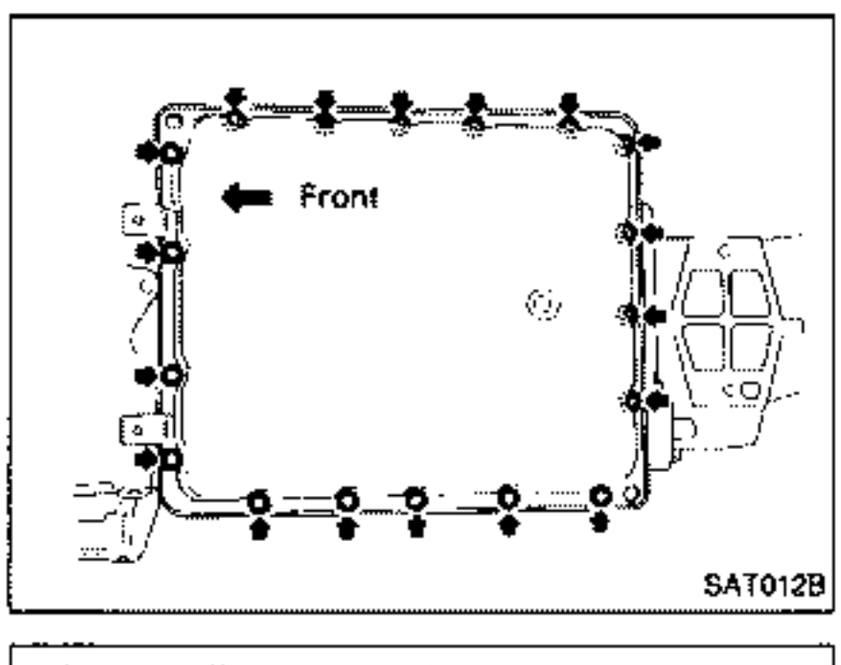

b. Install oil pan gasket on transmission case.
c. Install oil pan and bracket on transmission case.

- **Tighten four bolts in a criss-cross pattern to prevent dislocation of gasket.**

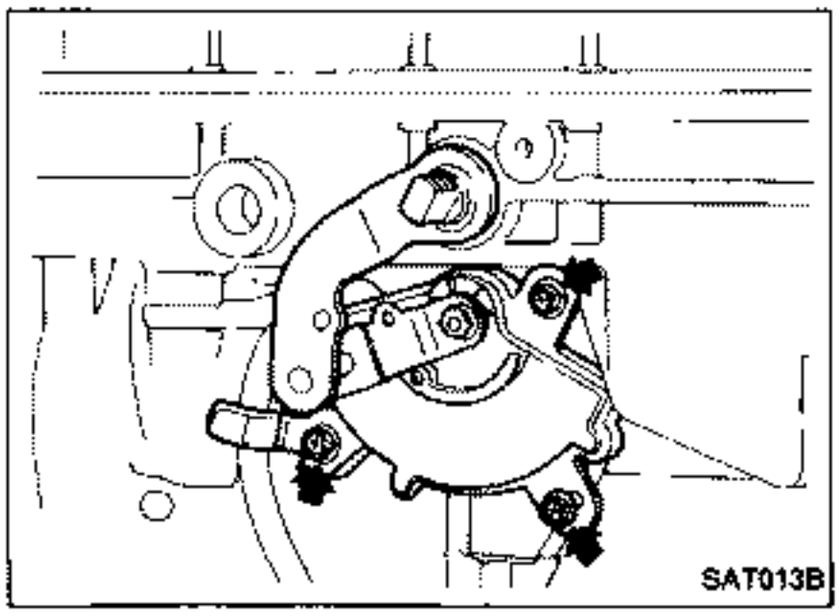

14. Install inhibitor switch.
a. Check that manual shaft is in "1" range.
b. Temporarily install inhibitor switch on manual shaft.
c. Move manual shaft to "N".

Assembly (Cont'd)

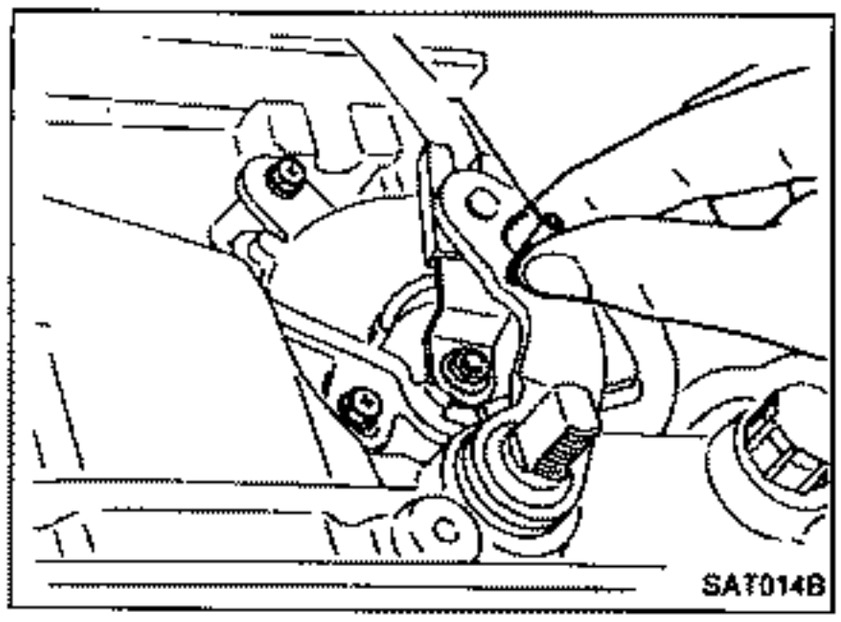

d. Tighten bolts while inserting 4.0 mm (0.157 in) dia. pin vertically into locating holes in inhibitor switch and manual shaft.

15. Install torque converter.

a. Pour A.T.F. into torque converter.

- **Approximately 2 liters (1-3/4 Imp qt) of fluid are required for a new torque converter.**
- **When reusing old torque converter, add the same amount of fluid as was drained.**

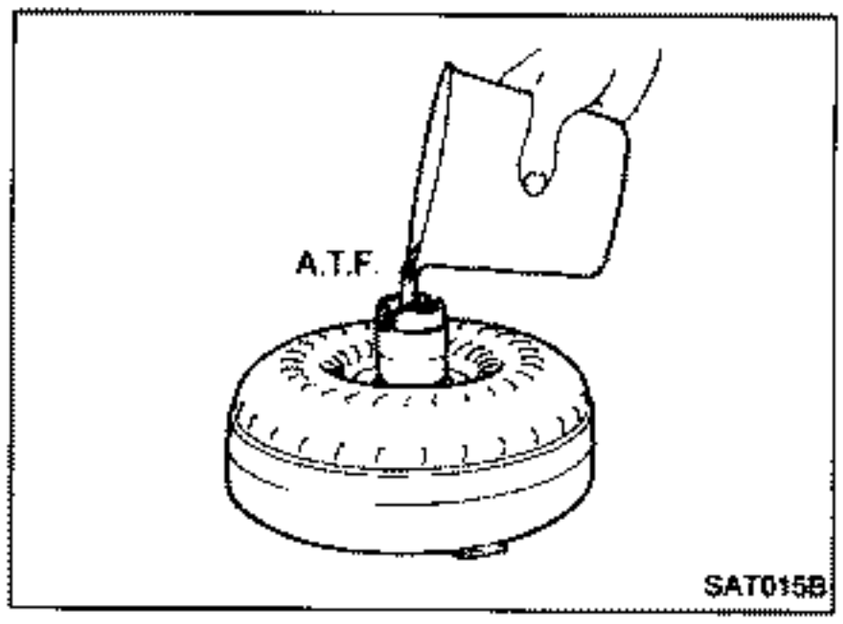

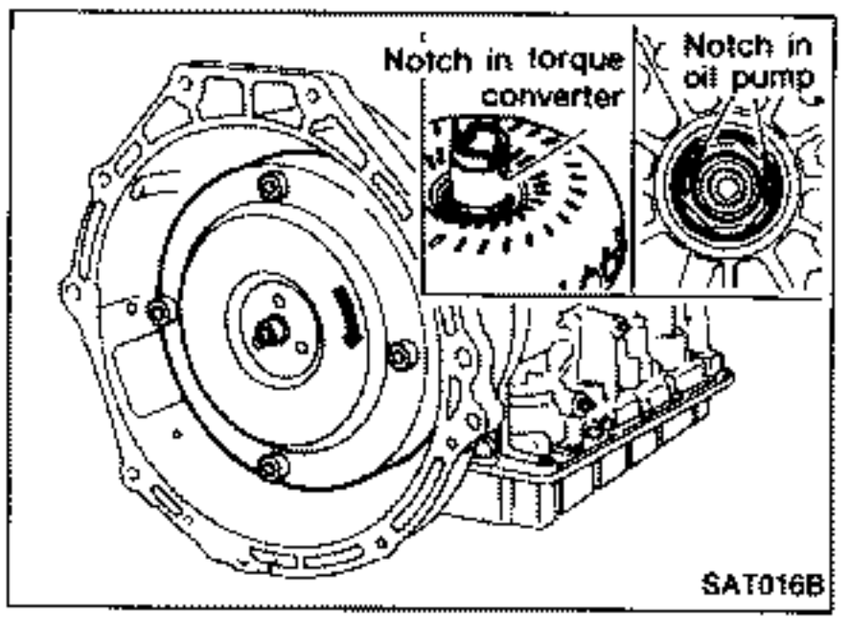

b. Install torque converter while aligning notches and oil pump.

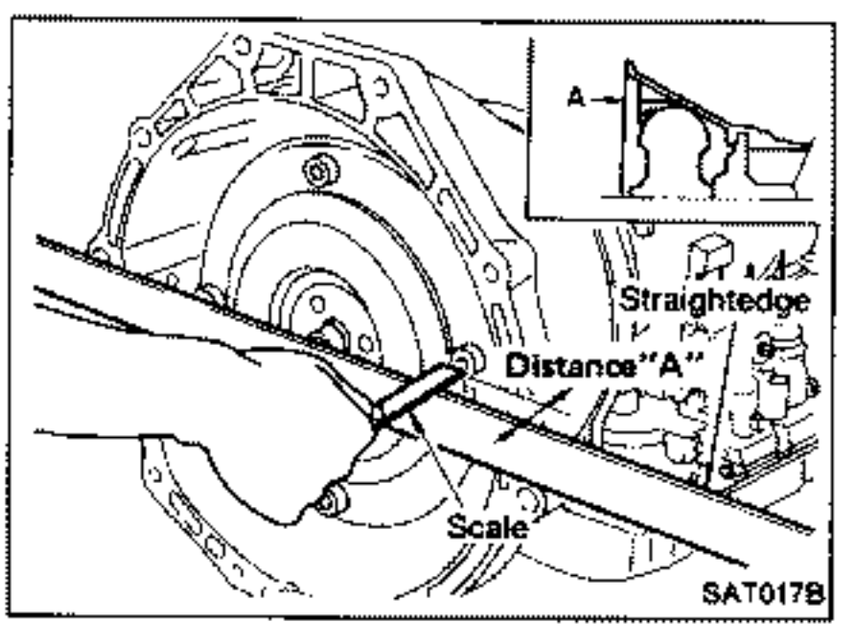

c. Measure distance A to check that torque converter is in proper position.

Distance "A":

RE4R01A

26 mm (1.02 in) or more

RE4R03A

25 mm (0.98 in) or more

Z.ONE.DATSUN

General Specifications

Engine		VG30DE	VG30DETT
Automatic transmission model		RE4R01A	RE4R03A
Transmission model code number		45 x 65	51 × 10
Stall torque ratio		2.0 : 1	
Transmission gear ratio			
1st		2.785	2.784
2nd		1.545	1.544
Top		1.000	1.000
O.D.		0.694	0.694
Reverse		2.272	2.275
Recommended oil		Automatic transmission fluid Type DEXRON™	
Oil capacity	ℓ (Imp qt)	8.3 (7-1/4)	8.7 (7-5/8)

Specifications and Adjustment — RE4R01A

VEHICLE SPEED WHEN SHIFTING GEARS

Throttle position	Vehicle speed km/h (MPH)					
	$D_1 \rightarrow D_2$	$D_2 \rightarrow D_3$	$D_3 \rightarrow D_4$	$D_4 \rightarrow D_3$	$D_3 \rightarrow D_2$	$D_2 \rightarrow D_1$
Full throttle	50 - 54 (31 - 34)	107 - 115 (66 - 71)	166 - 176 (103 - 109)	161 - 169 (100 - 105)	97 - 105 (60 - 65)	44 - 48 (27 - 30)
Half throttle	45 - 49 (28 - 30)	83 - 89 (52 - 55)	119 - 127 (74 - 79)	80 - 86 (50 - 55)	33 - 39 (21 - 24)	10 - 14 (6 - 9)

VEHICLE SPEED WHEN PERFORMING AND RELEASING LOCK-UP

Throttle position	O.D. switch [Shift range]	Vehicle speed km/h (MPH)	
		Lock-up "ON"	Lock-up "OFF"
Full throttle	ON [D_4]	167 - 175 (104 - 109)	161 - 169 (100 - 105)
	OFF [D_3]	107 - 115 (66 - 71)	97 - 105 (60 - 65)
Half throttle	ON [D_4]	120 - 128 (75 - 80)	84 - 92 (52 - 57)
	OFF [D_3]	91 - 99 (57 - 62)	86 - 94 (53 - 58)

STALL REVOLUTION

Stall revolution rpm
2,450 - 2,650

LINE PRESSURE

Engine speed rpm	Line pressure kPa (bar, kg/cm², psi)	
	D, 2 and 1 ranges	R range
Idle	412 - 490 (4.12 - 4.90, 4.2 - 5.0, 60 - 71)	608 - 647 (6.08 - 6.47, 6.2 - 6.6, 88 - 94)
Stall	1,020 - 1,098 (10.20 - 10.98, 10.4 - 11.2, 148 - 159)	1,422 - 1,500 (14.22 - 15.00, 14.5 - 15.3, 206 - 218)

Specifications and Adjustment — RE4R01A (Cont'd)

RETURN SPRINGS

Unit: mm (in)

Parts		Item	Part No.	Free length	Outer diameter
Control valve	Upper body	Torque converter relief valve spring	31742-41X23	38.0 (1.496)	9.0 (0.354)
		Pressure regulator valve spring	31742-41X24	44.02 (1.7331)	14.0 (0.551)
		Pressure modifier valve spring	31742-41X19	31.95 (1.2579)	6.8 (0.268)
		Shuttle shift valve D spring	31762-41X00	26.5 (1.043)	6.0 (0.236)
		4-2 sequence valve spring	31756-41X00	29.1 (1.146)	6.95 (0.2736)
		Shift valve B spring	31762-41X01	25.0 (0.984)	7.0 (0.276)
		4-2 relay valve spring	31756-41X00	29.1 (1.146)	6.95 (0.2736)
		Shift valve A spring	31762-41X01	25.0 (0.984)	7.0 (0.276)
		Overrun clutch control valve spring	31762-41X03	23.6 (0.929)	7.0 (0.276)
		Overrun clutch reducing valve spring	31742-41X20	32.5 (1.280)	7.0 (0.276)
		Shuttle shift valve S spring	31762-41X04	51.0 (2.008)	5.65 (0.2224)
		Pilot valve spring	31742-41X13	25.7 (1.012)	9.1 (0.358)
		Lock-up control valve spring	31742-41X22	18.5 (0.728)	13.0 (0.512)
	Lower body	Modifier accumulator piston spring	31742-41X15	30.5 (1.201)	9.8 (0.386)
		1st reducing valve spring	31756-41X05	25.4 (1.000)	6.75 (0.2657)
		3-2 timing valve spring	31742-41X08	20.55 (0.8091)	6.75 (0.2657)
		Servo charger valve spring	31742-41X06	23.0 (0.906)	6.7 (0.264)
Reverse clutch		16 pcs	31505-41X02	19.69 (0.7752)	11.6 (0.457)
High clutch		16 pcs	31505-21X03	22.06 (0.8685)	11.6 (0.457)
Forward clutch (Overrun clutch)		20 pcs	31505-41X01	35.77 (1.4083)	9.7 (0.382)
Low & reverse brake		18 pcs	31521-21X00	23.7 (0.933)	11.6 (0.457)
Band servo	Spring A		31605-41X05	45.6 (1.795)	34.3 (1.350)
	Spring B		31605-41X00	53.8 (2.118)	40.3 (1.587)
	Spring C		31605-41X01	29.7 (1.169)	27.6 (1.087)
Accumulator	Accumulator A		31605-41X02	43.0 (1.693)	
	Accumulator B		31605-41X10	66.0 (2.598)	
	Accumulator C		31605-41X09	45.0 (1.772)	
	Accumulator D		31605-41X06	58.4 (2.299)	

Z.ONE.DATSUN

Specifications and Adjustment — RE4R01A (Cont'd)

ACCUMULATOR O-RING

Accumulator	Diameter mm (in)			
	A	B	C	D
Small diameter end	29 (1.14)	32 (1.26)	45 (1.77)	29 (1.14)
Large diameter end	45 (1.77)	50 (1.97)	50 (1.97)	45 (1.77)

CLUTCHES AND BRAKES

Reverse clutch

Number of drive plates	2
Number of driven plates	2
Thickness of drive plate mm (in)	
Standard	2.0 (0.079)
Wear limit	1.8 (0.071)
Clearance mm (in)	
Standard	0.5 - 0.8 (0.020 - 0.031)
Allowable limit	1.2 (0.047)

Thickness of retaining plate	Thickness mm (in)	Part number
	4.6 (0.181)	31537-21X00
	4.8 (0.189)	31537-21X01
	5.0 (0.197)	31537-21X02
	5.2 (0.205)	31537-21X03
	5.4 (0.213)	31537-21X04
	5.6 (0.220)	31567-21X13
	5.8 (0.228)	31567-21X14

High clutch

Number of drive plates	5
Number of driven plates	5
Thickness of drive plate mm (in)	
Standard	1.6 (0.063)
Wear limit	1.4 (0.055)
Clearance mm (in)	
Standard	1.8 - 2.2 (0.071 - 0.087)
Allowable limit	3.2 (0.126)

Thickness of retaining plate	Thickness mm (in)	Part number
	3.4 (0.134)	31537-41X71
	3.6 (0.142)	31537-41X61
	3.8 (0.150)	31537-41X62
	4.0 (0.157)	31537-41X63
	4.2 (0.165)	31537-41X64
	4.4 (0.173)	31537-41X65
	4.6 (0.181)	31537-41X66
	4.8 (0.189)	31537-41X67

Forward clutch

Number of drive plates	7
Number of driven plates	7
Thickness of drive plate mm (in)	
Standard	1.6 (0.063)
Wear limit	1.4 (0.055)
Clearance mm (in)	
Standard	0.45 - 0.85 (0.0177 - 0.0335)
Allowable limit	2.25 (0.0886)

Thickness of retaining plate	Thickness mm (in)	Part number
	4.0 (0.157)	31537-41X07
	4.2 (0.165)	31537-41X08
	4.4 (0.173)	31537-41X09
	4.6 (0.181)	31537-41X10
	4.8 (0.189)	31537-41X11
	5.0 (0.197)	31537-41X12
	5.2 (0.205)	31537-41X13

Overrun clutch

Number of drive plates	3
Number of driven plates	5
Thickness of drive plate mm (in)	
Standard	2.0 (0.079)
Wear limit	1.8 (0.071)
Clearance mm (in)	
Standard	1.0 - 1.4 (0.039 - 0.055)
Allowable limit	2.0 (0.079)

Thickness of retaining plate	Thickness mm (in)	Part number
	4.0 (0.157)	31537-41X79
	4.2 (0.165)	31537-41X80
	4.4 (0.173)	31537-41X81
	4.6 (0.181)	31537-41X82
	4.8 (0.189)	31537-41X83
	5.0 (0.197)	31537-41X84
	5.2 (0.205)	31537-41X20

Z.ONE.DATSUN

Specifications and Adjustment — RE4R01A (Cont'd)

Low & reverse brake		
Number of drive plates	7	
Number of driven plates	9	
Thickness of drive plate mm (in)		
Standard	2.0 (0.079)	
Wear limit	1.8 (0.071)	
Clearance mm (in)		
Standard	1.1 - 1.5 (0.043 - 0.059)	
Allowable limit	2.9 (0.114)	
Thickness of retaining plate	Thickness mm (in)	Part number
	7.2 (0.283)	31667-41X13
	7.4 (0.291)	31667-41X14
	7.6 (0.299)	31667-41X07
	7.8 (0.307)	31667-41X08
	8.0 (0.315)	31667-41X00
	8.2 (0.323)	31667-41X01
Brake band		
Anchor end bolt tightening torque N·m (kg-m, ft-lb)	4 - 6 (0.4 - 0.6, 2.9 - 4.3)	
Number of returning revolutions for anchor end bolt	2.5	

OIL PUMP AND LOW ONE-WAY CLUTCH

Oil pump clearance mm (in)	
Cam ring — oil pump housing	
Standard	0.01 - 0.024 (0.0004 - 0.0009)
Rotor, vanes and control piston — oil pump housing	
Standard	0.03 - 0.044 (0.0012 - 0.0017)
Seal ring clearance mm (in)	
Standard	0.10 - 0.25 (0.0039 - 0.0098)
Allowable limit	0.25 (0.0098)

TOTAL END PLAY

Total end play "T_1"	0.25 - 0.55 mm (0.0098 - 0.0217 in)	
Thickness of oil pump cover bearing race	Thickness mm (in)	Part number
	0.8 (0.031)	31429-21X00
	1.0 (0.039)	31429-21X01
	1.2 (0.047)	31429-21X02
	1.4 (0.055)	31429-21X03
	1.6 (0.063)	31429-21X04
	1.8 (0.071)	31429-21X05
	2.0 (0.079)	31429-21X06

REVERSE CLUTCH DRUM END PLAY

Reverse clutch drum end play "T_2"	0.55 - 0.90 mm (0.0217 - 0.0354 in)	
Thickness of oil pump thrust washer	Thickness mm (in)	Part number
	0.7 (0.028)	31528-21X00
	0.9 (0.035)	31528-21X01
	1.1 (0.043)	31528-21X02
	1.3 (0.051)	31528-21X03
	1.5 (0.059)	31528-21X04
	1.7 (0.067)	31528-21X05
	1.9 (0.075)	31528-21X06

REMOVAL AND INSTALLATION

Manual control linkage	
Number of returning revolutions for lock nut	1
Lock nut tightening torque	11 - 15 N·m (1.1 - 1.5 kg-m, 8 - 11 ft-lb)
Distance between end of clutch housing and torque converter	26.0 mm (1.024 in) or more
Drive plate runout limit	0.5 mm (0.020 in)

Specifications and Adjustment — RE4R03A

VEHICLE SPEED WHEN SHIFTING GEARS

Throttle position	Vehicle speed km/h (MPH)					
	$D_1 \rightarrow D_2$	$D_2 \rightarrow D_3$	$D_3 \rightarrow D_4$	$D_4 \rightarrow D_3$	$D_3 \rightarrow D_2$	$D_2 \rightarrow D_1$
Full throttle	68 - 72 (42 - 45)	120 - 128 (75 - 80)	183 - 193 (114 - 120)	177 - 187 (110 - 116)	111 - 119 (69 - 74)	47 - 51 (29 - 32)
Half throttle	47 - 51 (29 - 32)	89 - 95 (55 - 59)	136 - 144 (85 - 89)	118 - 126 (73 - 78)	79 - 85 (49 - 53)	10 - 14 (6 - 9)

VEHICLE SPEED WHEN PERFORMING AND RELEASING LOCK-UP

Throttle position	O.D. switch [Shift range]	Vehicle speed km/h (MPH)	
		Lock-up "ON"	Lock-up "OFF"
Full throttle	ON [D_4]	184 - 192 (114 - 119)	178 - 186 (111 - 116)
	OFF [D_3]	120 - 128 (75 - 80)	111 - 119 (69 - 74)
Half throttle	ON [D_4]	136 - 144 (85 - 89)	117 - 125 (73 - 78)
	OFF [D_3]	91 - 99 (57 - 62)	86 - 94 (53 - 58)

STALL REVOLUTION

Stall revolution rpm
2,950 - 3,200

LINE PRESSURE

Engine speed rpm	Line pressure kPa (bar, kg/cm², psi)	
	D, 2 and 1 ranges	R range
Idle	412 - 490 (4.12 - 4.90, 4.2 - 5.0, 60 - 71)	608 - 647 (6.08 - 6.47, 6.2 - 6.6, 88 - 94)
Stall	1,020 - 1,098 (10.20 - 10.98, 10.4 - 11.2, 148 - 159)	1,422 - 1,500 (14.22 - 15.00, 14.5 - 15.3, 206 - 218)

Specifications and Adjustment — RE4R03A (Cont'd)

RETURN SPRINGS

Unit: mm (in)

Parts		Item	Part No.	Free length	Outer diameter
Control valve	Upper body	Torque converter relief valve spring	31742-41X23	38.0 (1.496)	9.0 (0.354)
		Pressure regulator valve spring	31742-41X24	44.02 (1.7331)	14.0 (0.551)
		Pressure modifier valve spring	31742-41X19	31.95 (1.2579)	6.8 (0.268)
		Shuttle shift valve D spring	31762-41X00	26.5 (1.043)	6.0 (0.236)
		4-2 sequence valve spring	31756-41X00	29.1 (1.146)	6.95 (0.2736)
		Shift valve B spring	31762-41X01	25.0 (0.984)	7.0 (0.276)
		4-2 relay valve spring	31756-41X00	29.1 (1.146)	6.95 (0.2736)
		Shift valve A spring	31762-41X01	25.0 (0.984)	7.0 (0.276)
		Overrun clutch control valve spring	31762-41X03	23.6 (0.929)	7.0 (0.276)
		Overrun clutch reducing valve spring	31742-41X20	32.5 (1.280)	7.0 (0.276)
		Shuttle shift valve S spring	31762-41X04	51.0 (2.008)	5.65 (0.2224)
		Pilot valve spring	31742-41X13	25.7 (1.012)	9.1 (0.358)
		Lock-up control valve spring	31742-41X22	18.5 (0.728)	13.0 (0.512)
	Lower body	Modifier accumulator piston spring	31742-41X15	30.5 (1.201)	9.8 (0.386)
		1st reducing valve spring	31756-41X05	25.4 (1.000)	6.75 (0.2657)
		3-2 timing valve spring	31742-41X08	20.55 (0.8091)	6.75 (0.2657)
		Servo charger valve spring	31742-41X06	23.0 (0.906)	6.7 (0.264)
Reverse clutch		16 pcs	31505-51X00	37.8 (1.488)	14.8 (0.583)
High clutch		16 pcs	31505-21X03	22.06 (0.8685)	11.6 (0.457)
Forward clutch (Overrun clutch)		20 pcs	31505-51X04	36.8 (1.449)	9.8 (0.386)
Low & reverse brake		Inner 16 pcs	31505-51X06	20.43 (0.8043)	10.3 (0.406)
		Outer 16 pcs	31505-51X05	20.35 (0.8012)	13.0 (0.512)
Band servo		Spring A	31605-41X05	45.6 (1.795)	34.3 (1.350)
		Spring B	31605-41X00	53.8 (2.118)	40.3 (1.587)
		Spring C	31605-41X01	29.7 (1.169)	27.6 (1.087)
Accumulator		Accumulator A	31605-41X02	43.0 (1.693)	
		Accumulator B	31605-41X10	66.0 (2.598)	
		Accumulator C	31605-41X09	45.0 (1.772)	
		Accumulator D	31605-41X06	58.4 (2.299)	

Z.ONE.DATSUN

Specifications and Adjustment — RE4R03A (Cont'd)

ACCUMULATOR O-RING

Accumulator	Diameter mm (in)			
	A	B	C	D
Small diameter end	29 (1.14)	32 (1.26)	45 (1.77)	29 (1.14)
Large diameter end	45 (1.77)	50 (1.97)	50 (1.97)	45 (1.77)

CLUTCHES AND BRAKES

Reverse clutch

Number of drive plates	3	
Number of driven plates	3	
Thickness of drive plate mm (in)		
Standard	2.0 (0.079)	
Wear limit	1.8 (0.071)	
Clearance mm (in)		
Standard	0.5 - 0.8 (0.020 - 0.031)	
Allowable limit	1.2 (0.047)	
Thickness of retaining plate	Thickness mm (in)	Part number
	4.4 (0.173)	31537-57X61
	4.6 (0.181)	31537-51X00
	4.8 (0.189)	31537-51X01
	5.0 (0.197)	31537-51X02

High clutch

Number of drive plates	7	
Number of driven plates	7 + 1	
Thickness of drive plate mm (in)		
Standard	1.6 (0.063)	
Wear limit	1.4 (0.055)	
Clearance mm (in)		
Standard	1.8 - 2.2 (0.071 - 0.087)	
Allowable limit	3.0 (0.118)	
Thickness of retaining plate	Thickness mm (in)	Part number
	4.0 (0.157)	31537-51X19
	4.2 (0.165)	31537-51X60
	4.4 (0.173)	31537-51X61
	4.6 (0.181)	31537-51X00
	4.8 (0.189)	31537-51X01
	5.0 (0.197)	31537-51X02

Forward clutch

Number of drive plates	8	
Number of driven plates	8	
Thickness of drive plate mm (in)		
Standard	2.0 (0.079)	
Wear limit	1.6 (0.063)	
Clearance mm (in)		
Standard	0.45 - 0.85 (0.0177 - 0.0335)	
Allowable limit	2.45 (0.0965)	
Thickness of retaining plate	Thickness mm (in)	Part number
	4.2 (0.165)	31537-51X67
	4.4 (0.173)	31537-51X05
	4.6 (0.181)	31537-51X06
	4.8 (0.189)	31537-51X07
	5.0 (0.197)	31537-51X08
	5.2 (0.205)	31537-51X09

Overrun clutch

Number of drive plates	4	
Number of driven plates	7	
Thickness of drive plate mm (in)		
Standard	1.6 (0.063)	
Wear limit	1.4 (0.055)	
Clearance mm (in)		
Standard	1.0 - 1.4 (0.039 - 0.055)	
Allowable limit	2.2 (0.087)	
Thickness of retaining plate	Thickness mm (in)	Part number
	3.8 (0.150)	31537-51X11
	4.0 (0.157)	31537-51X12
	4.2 (0.165)	31537-51X13
	4.4 (0.173)	31537-51X14
	4.6 (0.181)	31537-51X15
	4.8 (0.189)	31537-51X64

Specifications and Adjustment — RE4R03A (Cont'd)

Low & reverse brake		
Number of drive plates	2 + 6	
Number of driven plates	6	
Thickness of drive plate mm (in)		
Standard	1.6 (0.063)	
Wear limit	1.4 (0.055)	
Clearance mm (in)		
Standard	1.1 - 1.5 (0.043 - 0.059)	
Allowable limit	2.5 (0.098)	
Thickness of retaining plate	Thickness mm (in)	Part number
	4.2 (0.165)	31667-51X10
	4.4 (0.173)	31667-51X00
	4.6 (0.181)	31667-51X01
	4.8 (0.189)	31667-51X02
	5.0 (0.197)	31667-51X03
Brake band		
Anchor end bolt tightening torque N·m (kg-m, ft-lb)	4 - 6 (0.4 - 0.6, 2.9 - 4.3)	
Number of returning revolutions for anchor end bolt	2.5	

OIL PUMP AND LOW ONE-WAY CLUTCH

Oil pump clearance mm (in)	
Cam ring — oil pump housing	
Standard	0.01 - 0.024 (0.0004 - 0.0009)
Rotor, vanes and control piston — oil pump housing	
Standard	0.03 - 0.044 (0.0012 - 0.0017)
Seal ring clearance mm (in)	
Standard	0.10 - 0.25 (0.0039 - 0.0098)
Allowable limit	0.25 (0.0098)

TOTAL END PLAY

Total end play "T_1"	0.25 - 0.55 mm (0.0098 - 0.0217 in)	
Thickness of oil pump cover bearing race	Thickness mm (in)	Part number
	0.8 (0.031)	31429-21X00
	1.0 (0.039)	31429-21X01
	1.2 (0.047)	31429-21X02
	1.4 (0.055)	31429-21X03
	1.6 (0.063)	31429-21X04
	1.8 (0.071)	31429-21X05
	2.0 (0.079)	31429-21X06

REVERSE CLUTCH DRUM END PLAY

Reverse clutch drum end play "T_2"	0.55 - 0.90 mm (0.0217 - 0.0354 in)	
Thickness of oil pump thrust washer	Thickness mm (in)	Part number
	0.7 (0.028)	31528-21X00
	0.9 (0.035)	31528-21X01
	1.1 (0.043)	31528-21X02
	1.3 (0.051)	31528-21X03
	1.5 (0.059)	31528-21X04
	1.7 (0.067)	31528-21X05
	1.9 (0.075)	31528-21X06

REMOVAL AND INSTALLATION

Manual control linkage	
Number of returning revolutions for lock nut	1
Lock nut tightening torque	11 - 15 N·m (1.1 - 1.5 kg-m, 8 - 11 ft-lb)
Distance between end of clutch housing and torque converter	25.0 mm (0.984 in) or more
Drive plate runout limit	0.5 mm (0.020 in)

Z.ONE.DATSUN

PROPELLER SHAFT & DIFFERENTIAL CARRIER

SECTION PD

CONTENTS

PREPARATION ..... PD- 2
PROPELLER SHAFT ..... PD- 6
ON-VEHICLE SERVICE (Final drive) PD-11
REMOVAL AND INSTALLATION PD-13
FINAL DRIVE PD-14
DISASSEMBLY PD-16
INSPECTION PD-20
ADJUSTMENT PD-21
ASSEMBLY PD-29
DIFFERENTIAL OIL COOLER SYSTEM PD-35
SERVICE DATA AND SPECIFICATIONS (S.D.S.) PD-41

Z.ONE.DATSUN

SPECIAL SERVICE TOOLS

Tool number Tool name	Description		Unit application	
			R200V	R230V
ST38060002 Drive pinion flange wrench		Removing and installing propeller shaft lock nut, and drive pinion lock nut **Use two holes and propeller shaft connecting bolt to hold companion flange.**	X	—
KV38100800 Differential attachment	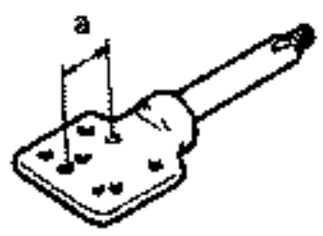	Mounting final drive (To use, make a new hole.) **a: 156 mm (6.14 in) — R200V** **178 mm (7.01 in) — R230V**	X	X
ST3090S000 Drive pinion rear inner race puller set ① ST30031000 Puller ② ST30901000 Base	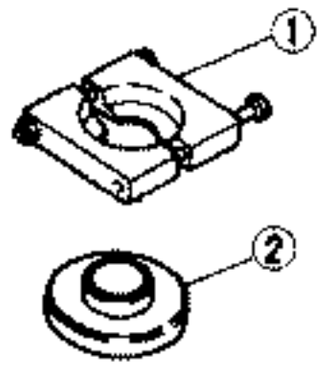	Removing and installing drive pinion rear cone	X	—
ST3002S000 Drive pinion rear inner race puller set ① ST30021000 Puller ② ST30022000 Base	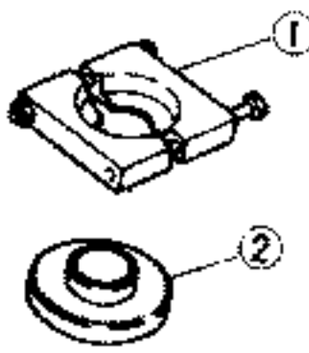	Removing and installing drive pinion rear cone	—	X
ST33051001 Differential side bearing puller body	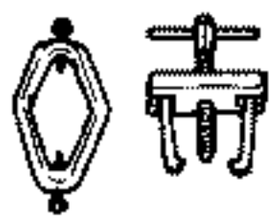	Removing and installing differential side bearing inner cone	X	X
ST33061000 Differential side bearing puller adapter	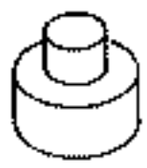	Removing and installing differential side bearing inner cone	X	—
ST30611000 Drift	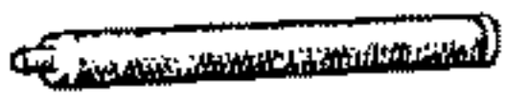	Installing pinion rear bearing outer race	X	X
ST30613000 Drift		Installing pinion front bearing outer race	X	—

Tool number Tool name	Description		Unit application	
			R200V	R230V
KV38100200 Oil seal drift	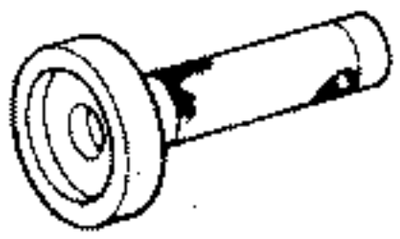	Installing side oil seal	X	—
KV38102510 Oil seal drift		Installing side oil seal	—	X
KV38100300 Drift	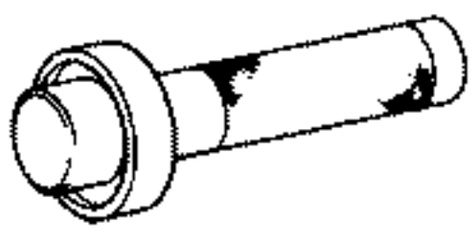	Installing side bearing inner cone	X	—
KV38100600 Side bearing spacer drift		Installing side bearing spacer	X	X
ST3127S000 Preload gauge ① GG91030000 Torque wrench ② HT62940000 Socket adapter ③ HT62900000 Socket adapter	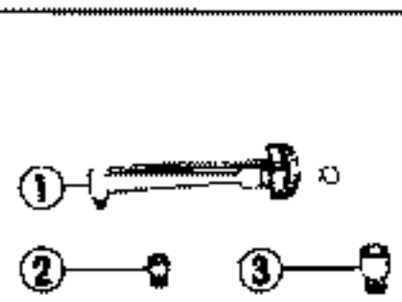	Measuring pinion bearing preload and total preload	X	X
HT72400000 Slide hammer		Removing differential case assembly	X	X
KV381039S0 Drive pinion height setting gauge ① KV38103910 Dummy shaft ② KV38100120 Height gauge ③ KV38100140 Stopper	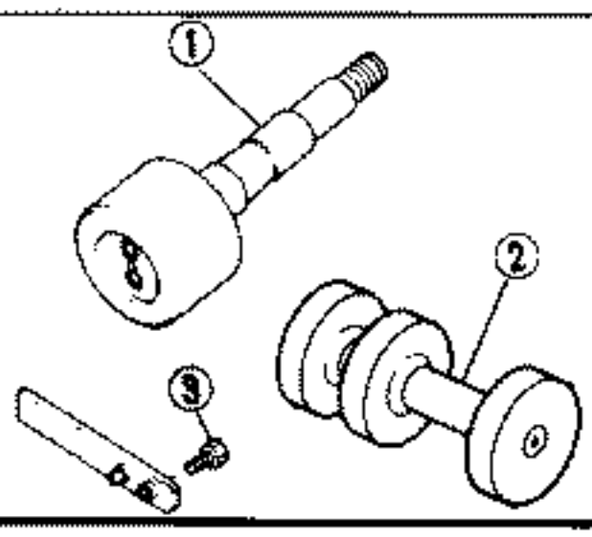	Selecting pinion height adjusting washer	X	—

Tool number Tool name	Description	Unit application	
		R200V	R230V
KV38107650 Drive pinion height setting gauge ① KV38107610 Dummy shaft ② KV38107650 Rear bearing spacer ③ KV38107640 Front bearing spacer ④ KV38107620 Height gauge ⑤ KV38107660 Side bearing adapter ⑥ KV38107630 Adapter shaft	Selecting pinion height adjusting washer 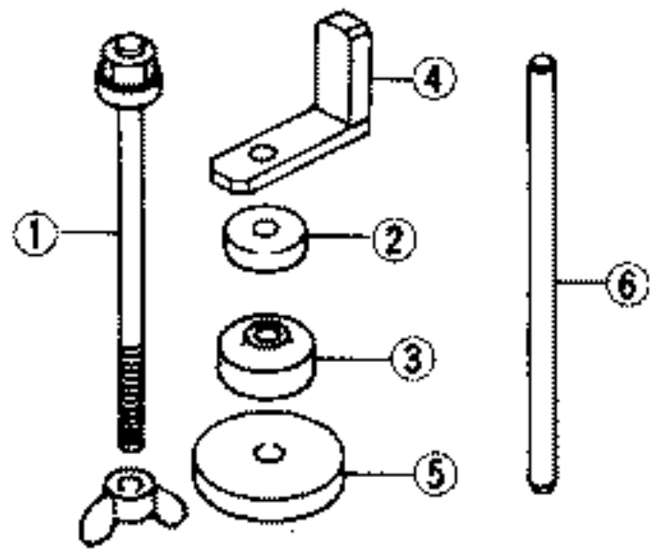	—	X

Z.ONE.DATSUN

COMMERCIAL SERVICE TOOLS

Tool name	Description		Unit application	
			R200V	R230V
Drift	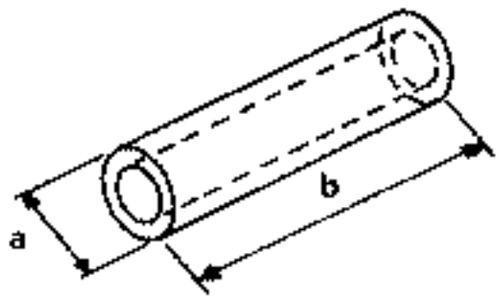	Installing pinion rear bearing outer race **a: 89 mm (3.50 in) dia. — R200V** **89 mm (3.90 in) dia. — R230V** **b: 200 mm (7.87 in)**	X	X
Oil seal drift	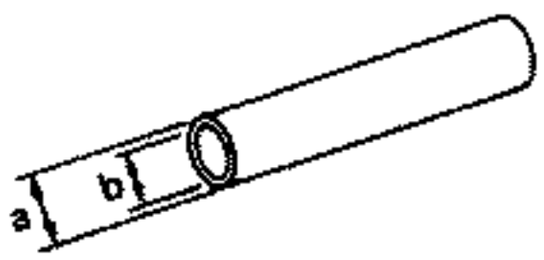	Installing front oil seal **a: 85 mm (3.35 in) dia.** **b: 69 mm (2.72 in) dia.**	—	X
Depth micrometer	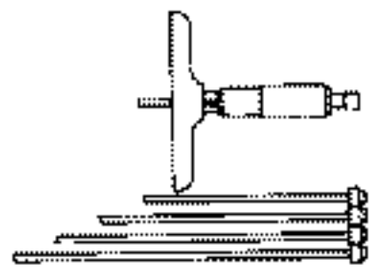	Measuring bearing height	X	X
Drift	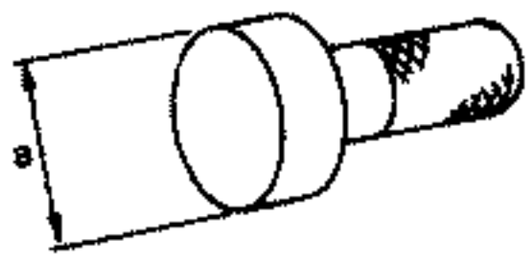	Installing pinion front bearing outer race **a: 79 mm (3.11 in) dia.**	—	X
Drift	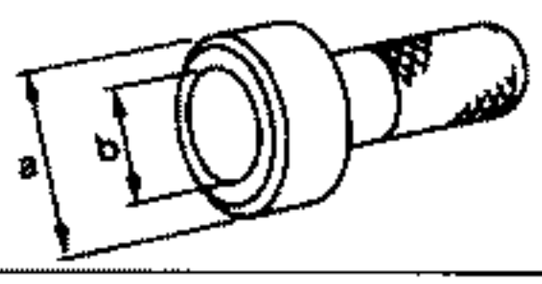	Installing side bearing inner cone **a: 64 mm (2.52 in) dia.** **b: 55.5 mm (2.185 in) dia.**	—	X
Adapter	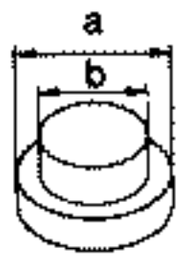	Removing and installing differential side bearing inner cone **a: 54 mm (2.13 in) dia.** **b: 39 mm (1.54 in) dia.**	—	X
Drive pinion flange wrench	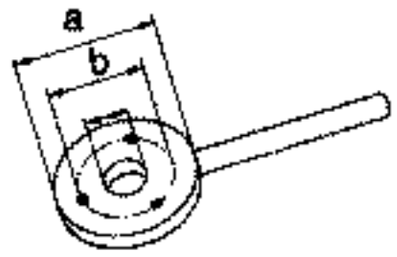	Removing and installing propeller shaft lock nut, and drive pinion lock nut. **a: 107 mm (4.21 in) dia.** **b: 94 mm (3.70 in) dia.** **c: 50 mm (1.97 in) dia.**	—	X

3S71A

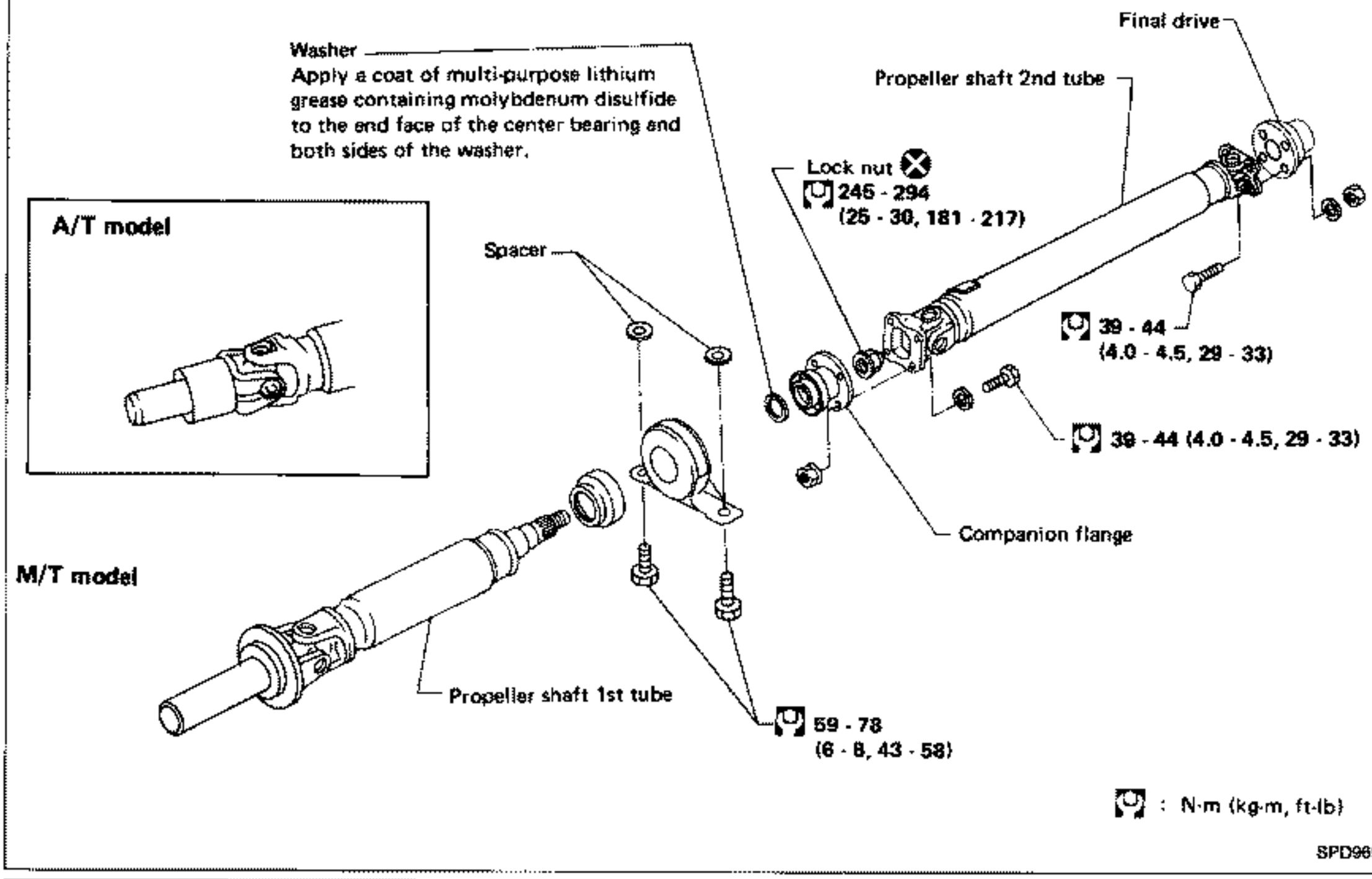

3S80A-VL107

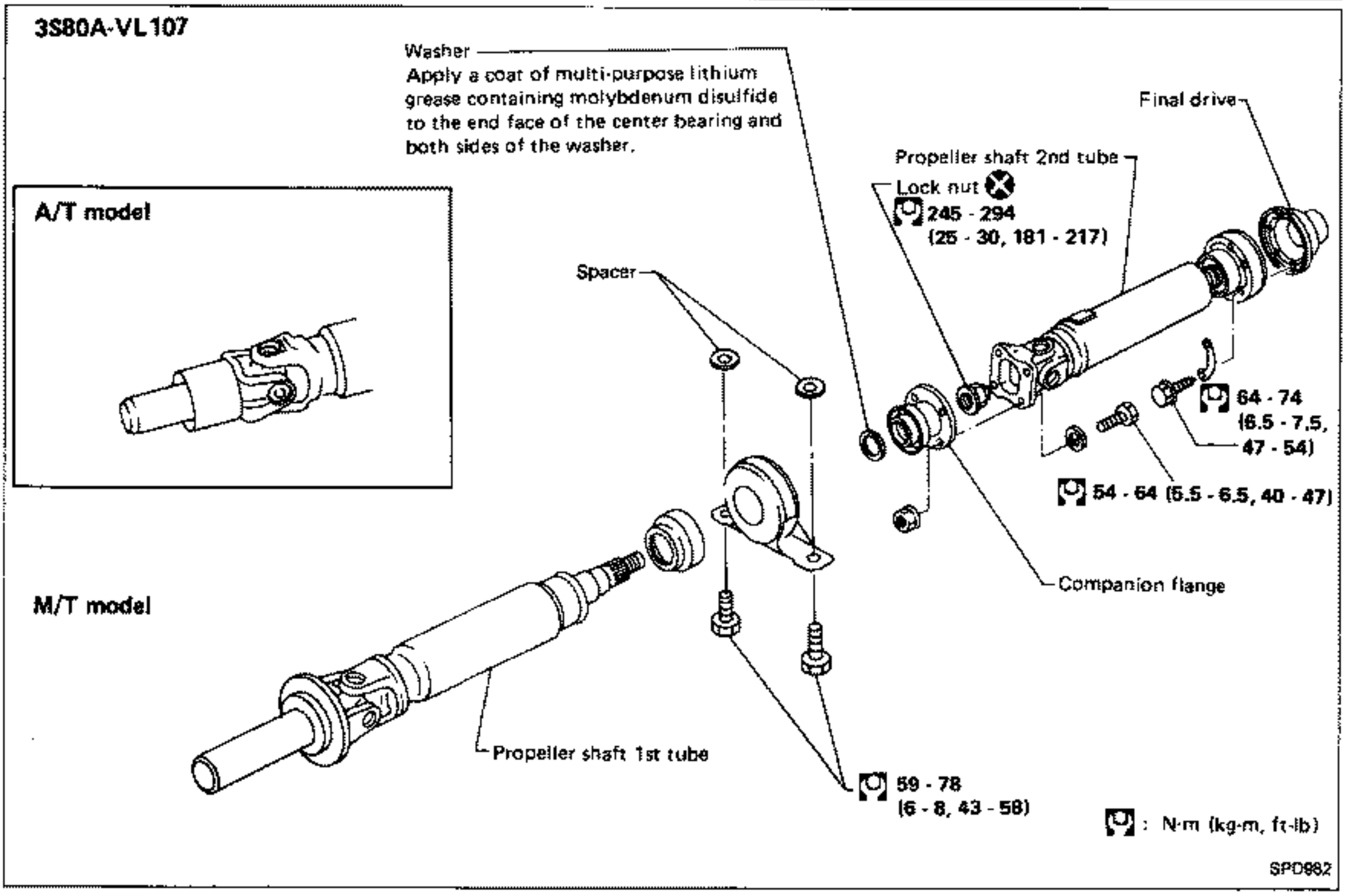

Z.ONE.DATSUN

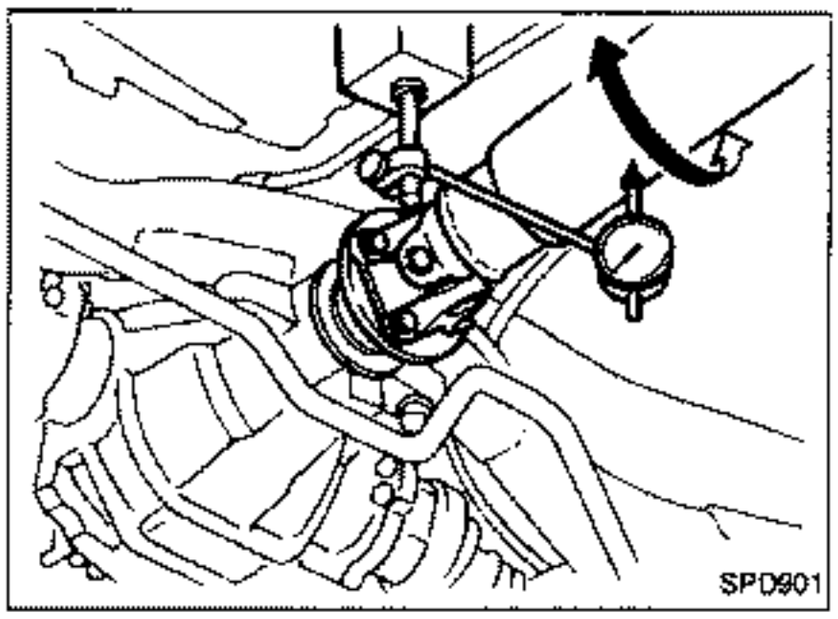

On-vehicle Service

PROPELLER SHAFT VIBRATION

If vibration is present at high speed, inspect propeller shaft runout first.

1. Raise rear wheels.
2. Measure propeller shaft runout at indicated points by rotating final drive companion flange with hands.
   Runout limit: 0.6 mm (0.024 in)

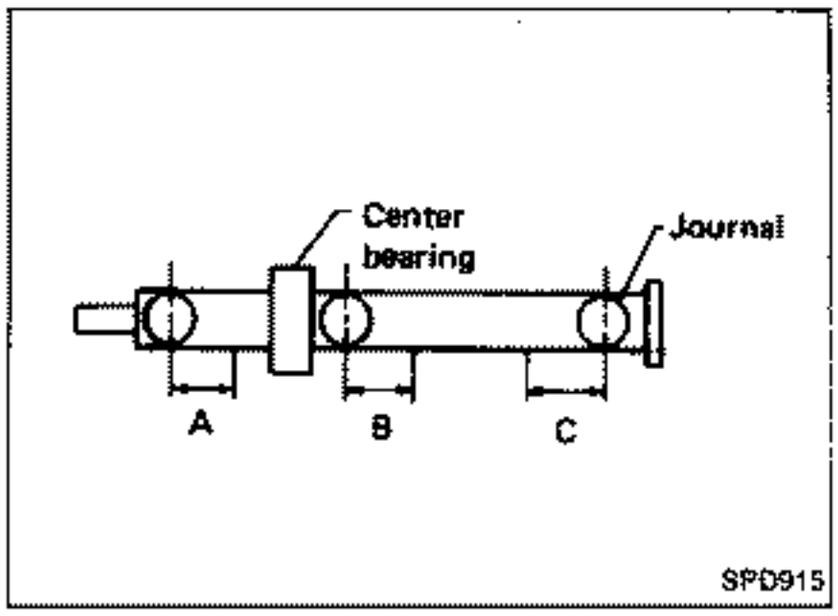

Propeller shaft runout measuring points:
Distance "A":
162 mm (6.38 in)
Distance "B":
3S71A: 172 mm (6.77 in)
3S80A-VL107: 200 mm (7.87 in)
Distance "C":
3S71A: 192 mm (7.56 in)
3S80A-VL107: 200 mm (7.87 in)

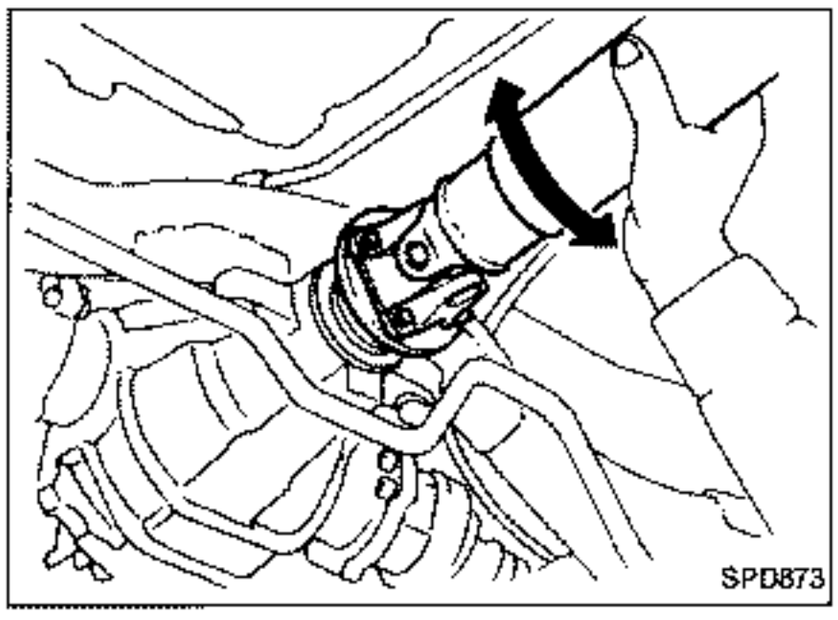

3. If runout exceeds specifications, disconnect propeller shaft at final drive companion flange. Rotate companion flange 90° (3S71A) or 60° (3S80A-VL107), and reconnect propeller shaft and check runout.
   Repeat above operation when companion flange is rotated 180° (3S71A) or 120° (3S80A-VL107) and 270° (3S71A) or 180° (3S80A-VL107), respectively. Also, for 3S80A-VL107, the operation should be repeated at 240° and 300°. Securely connect propeller shaft at the point where the smallest runout of the three measurements occurs.
   Runout limit: 0.6 mm (0.024 in)
4. Check runout again. If runout still exceeds specifications, replace propeller shaft assembly.
5. Perform road test.

APPEARANCE CHECKING

- Inspect propeller shaft tube surface for dents or cracks. If damaged, replace propeller shaft assembly.
- If center bearing is noisy or damaged, replace center bearing.

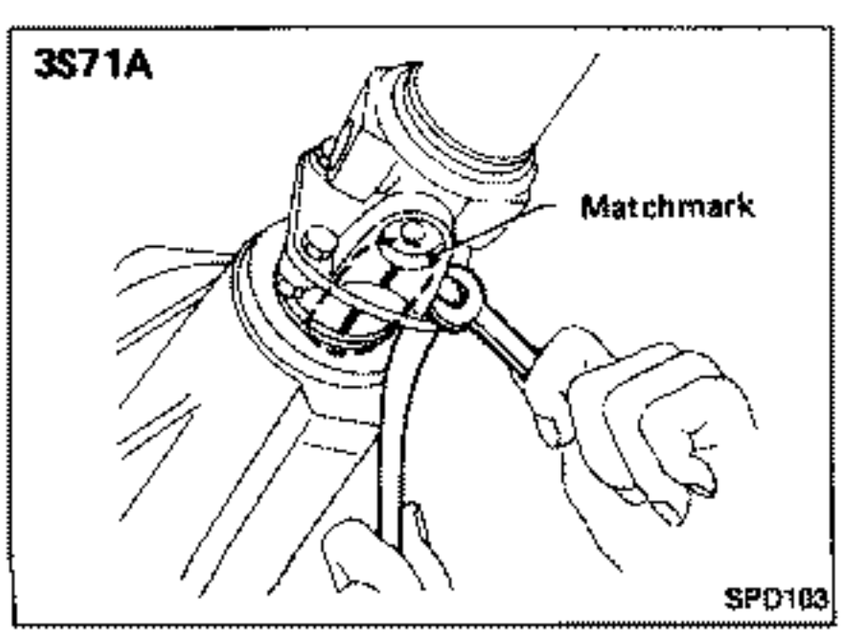

Removal

- Put matchmarks on flanges and separate propeller shaft from final drive.

Removal (Cont'd)

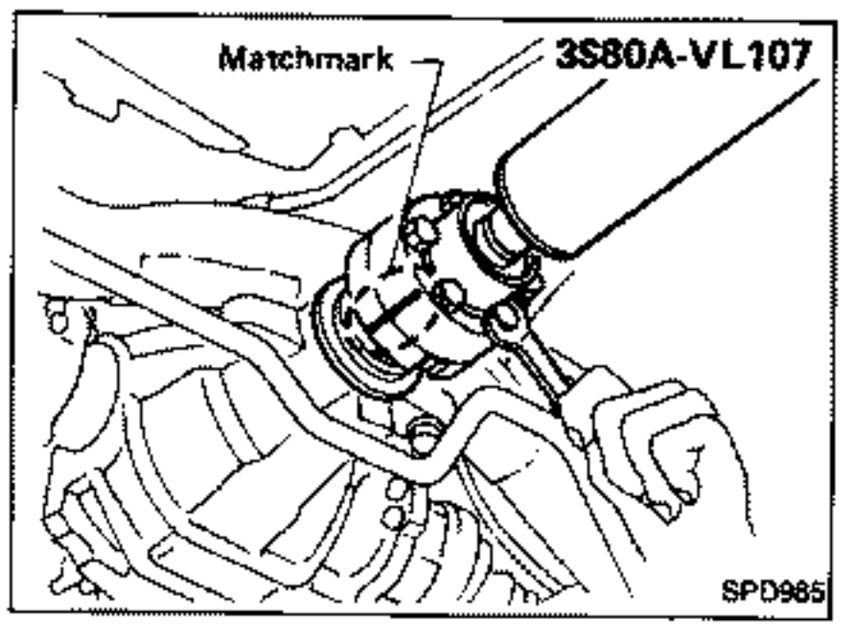

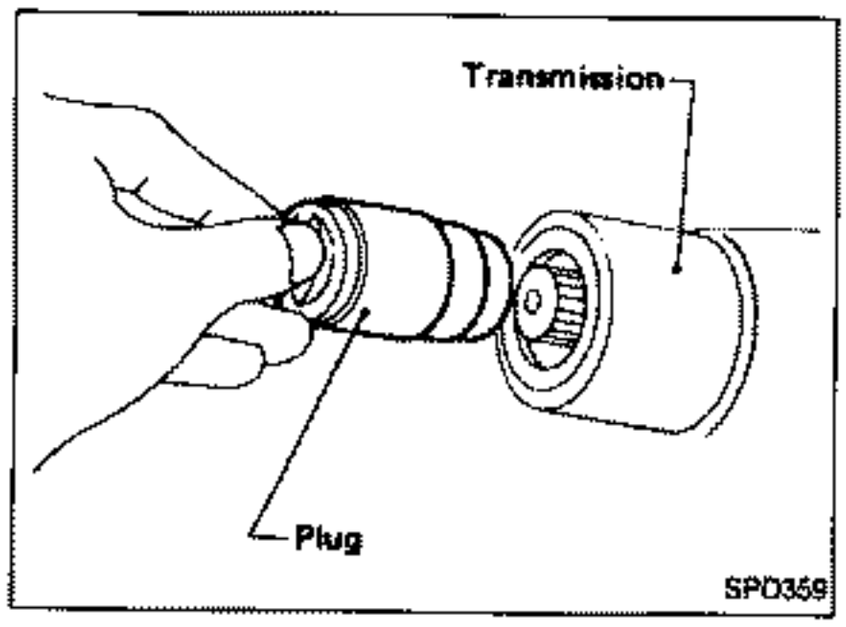

- Draw out propeller shaft from transmission and plug up rear end of transmission rear extension housing.

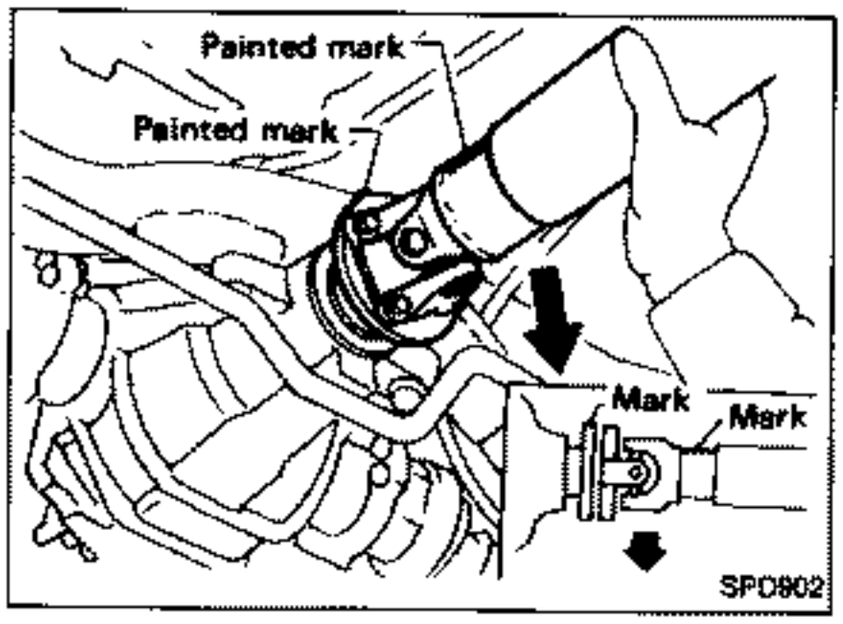

Installation

- Temporarily install differential companion flange and flange yoke so that their alignment marks (original marks) are located as close to each other as possible.
- Turn propeller shaft until alignment marks face straight upward. Securely fasten propeller shaft so that lower side wall of concave flange yoke will touch lower side wall of convex companion flange.

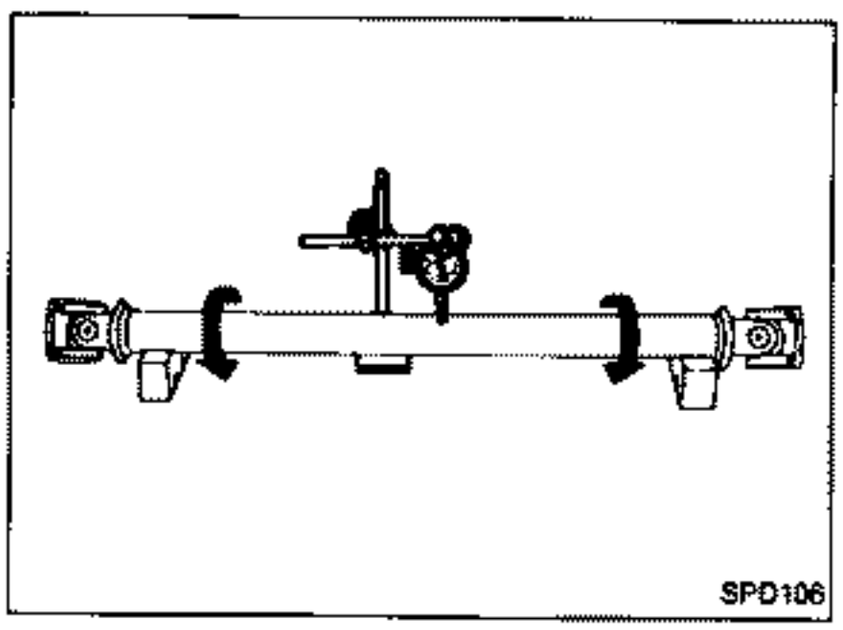

Inspection

- Inspect propeller shaft runout. If runout exceeds specifications, replace propeller shaft assembly.
  Runout limit: 0.6 mm (0.024 in)

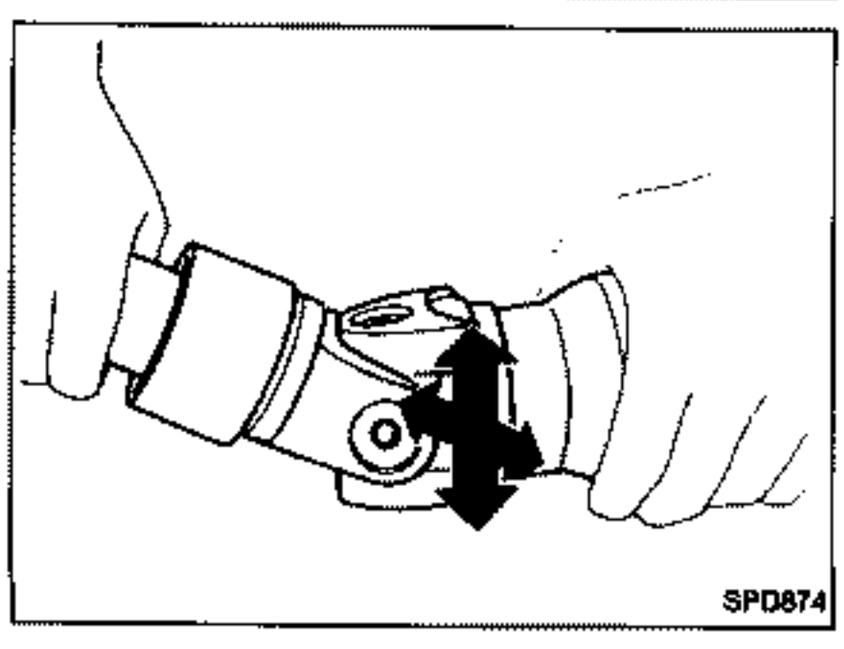

- Inspect journal axial play.
  If the play exceeds specifications, replace propeller shaft assembly.
  Journal axial play:
  0 mm (0 in)

Z.ONE.DATSUN

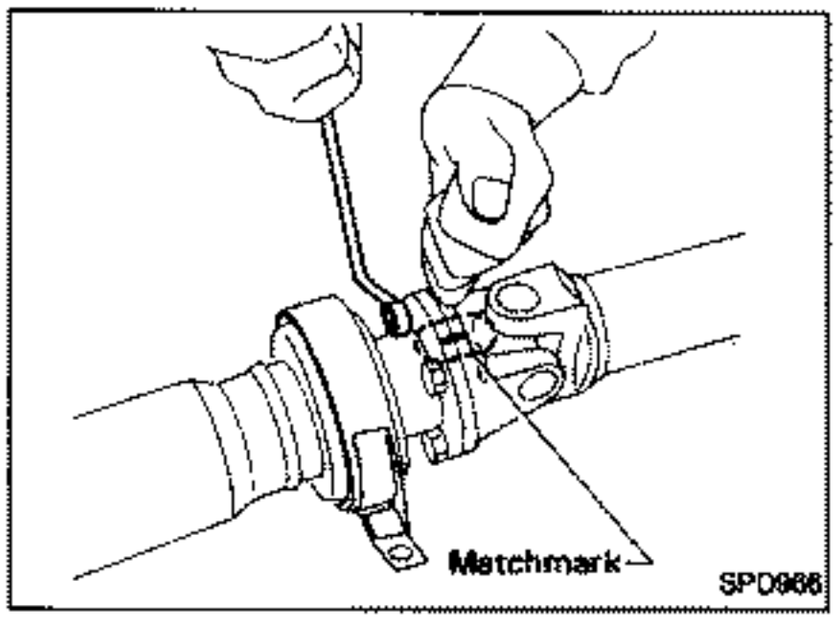

Disassembly

CENTER BEARING

1. Put matchmarks on flanges, and separate 2nd tube from 1st tube.

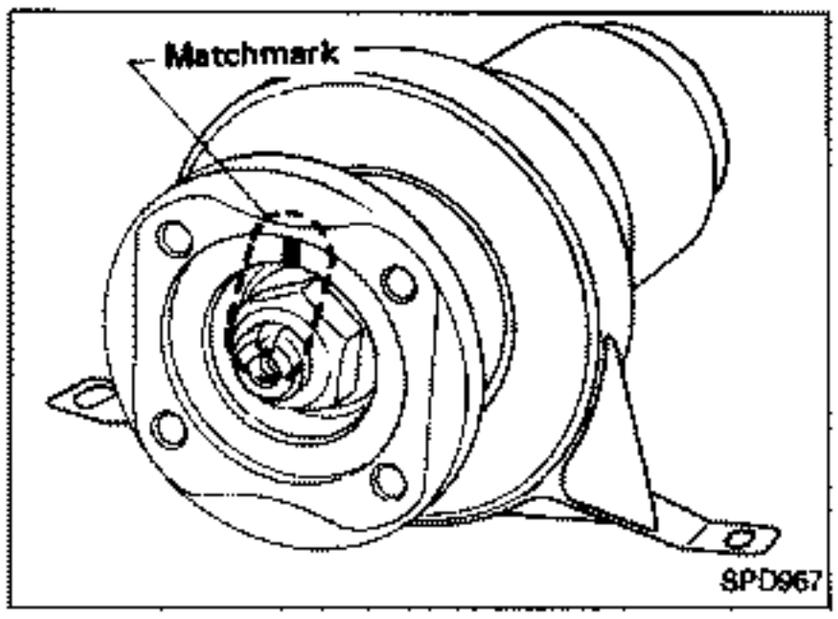

2. Put matchmarks on the flange and shaft.

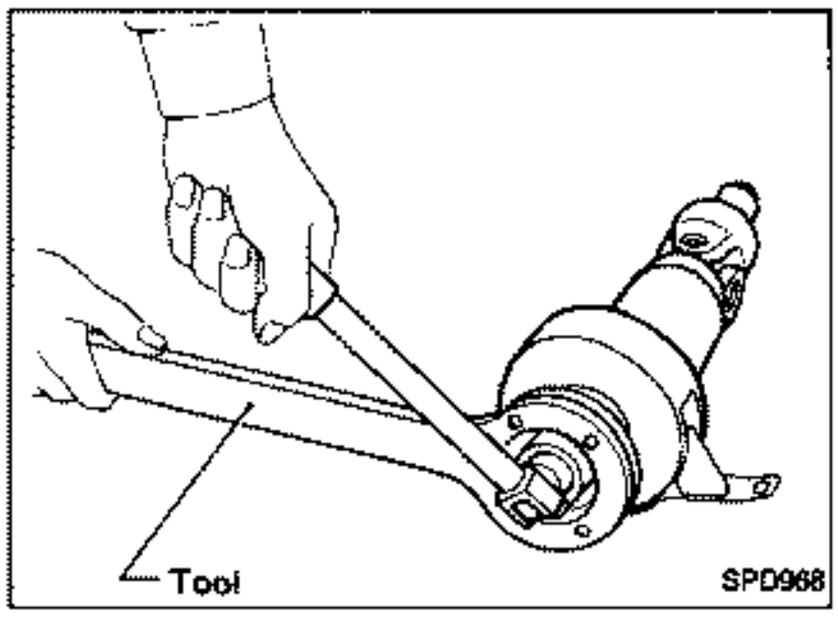

3. Remove locking nut with Tool.
   Tool number:
   ST38060002

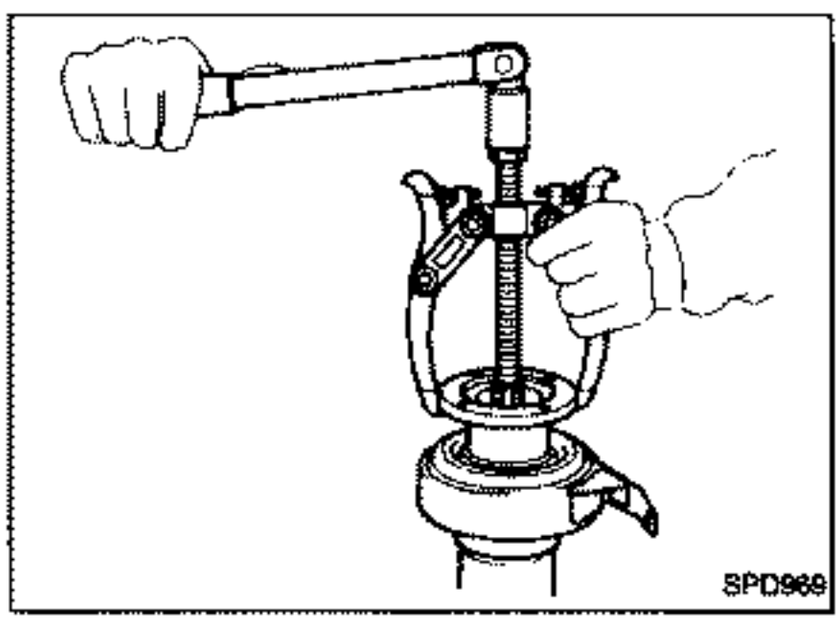

4. Remove companion flange with puller.

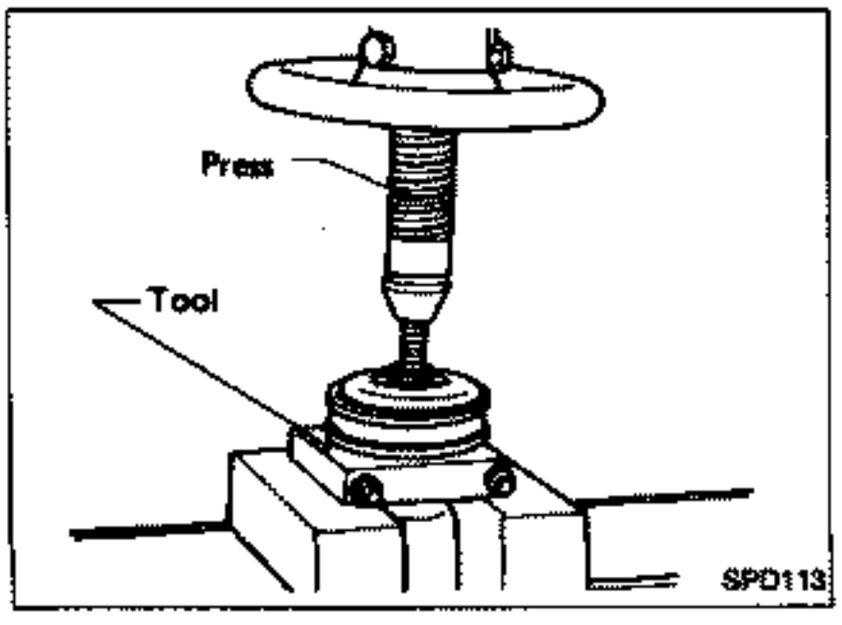

5. Remove center bearing with Tool and press.
   Tool number: ST30031000

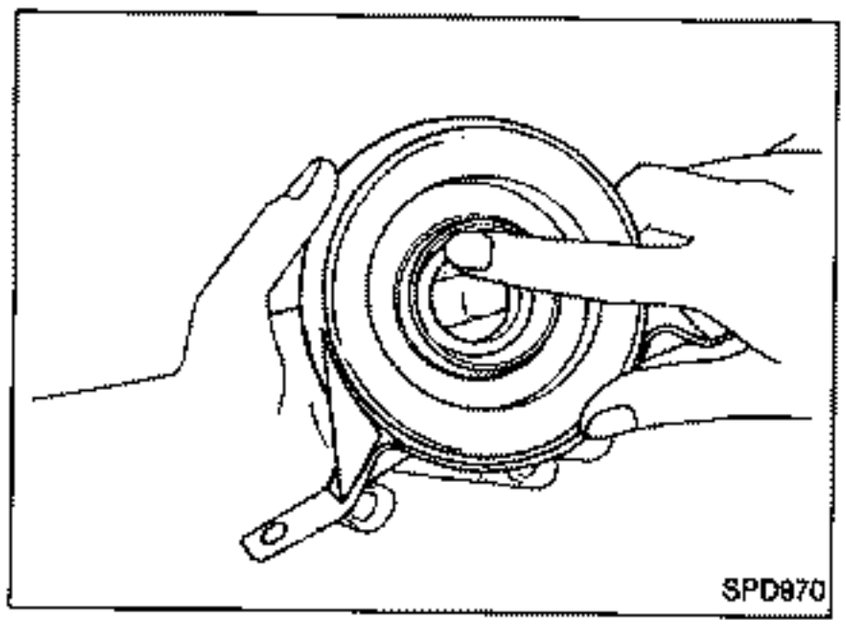

Assembly

CENTER BEARING

- Install center bearing with insulator's protrusion side facing front of vehicle.
- **Apply a coat of multi-purpose lithium grease containing molybdenum disulfide to the end face of the center bearing and both sides of the washer.**

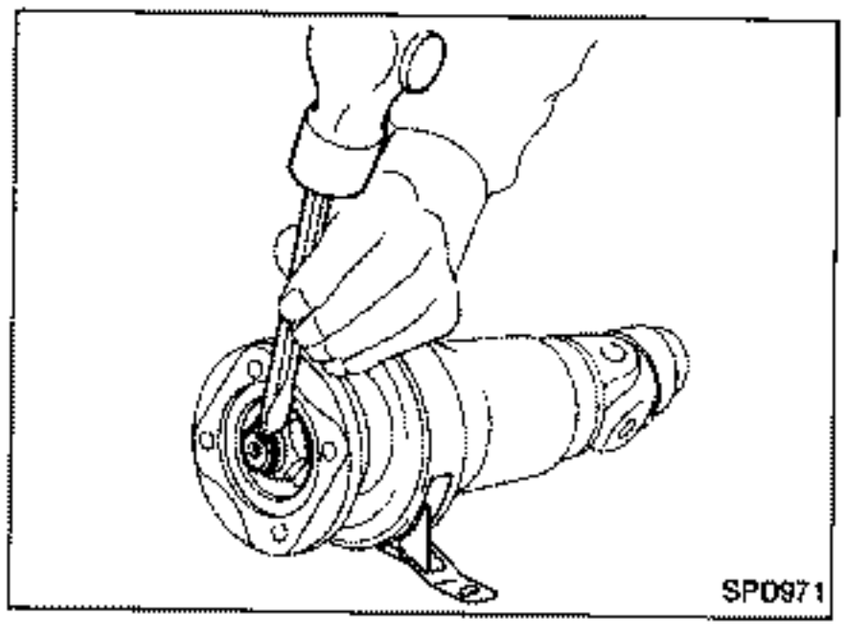

- Stake the nut. Always use new one.
- Align matchmarks when assembling tubes.

Z.ONE.DATSUN

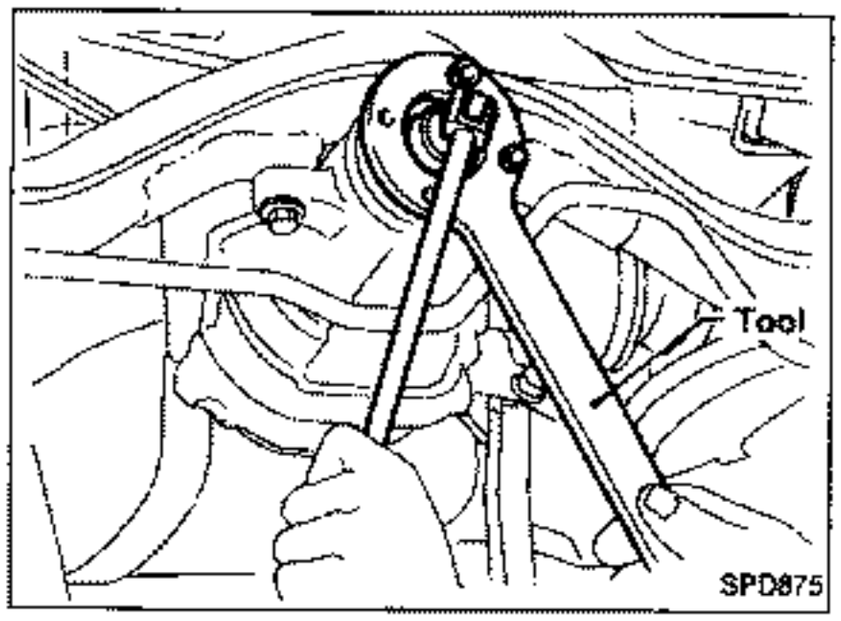

Front Oil Seal Replacement (R200V)

CAUTION:
For final drive models using collapsible spacer (R230V), bearing preload must be adjusted whenever companion flange is removed. In order to do this adjustment correctly, final drive overhaul is required.

1. Remove propeller shaft.
2. Loosen drive pinion nut with Tool.
   Tool number: ST38060002

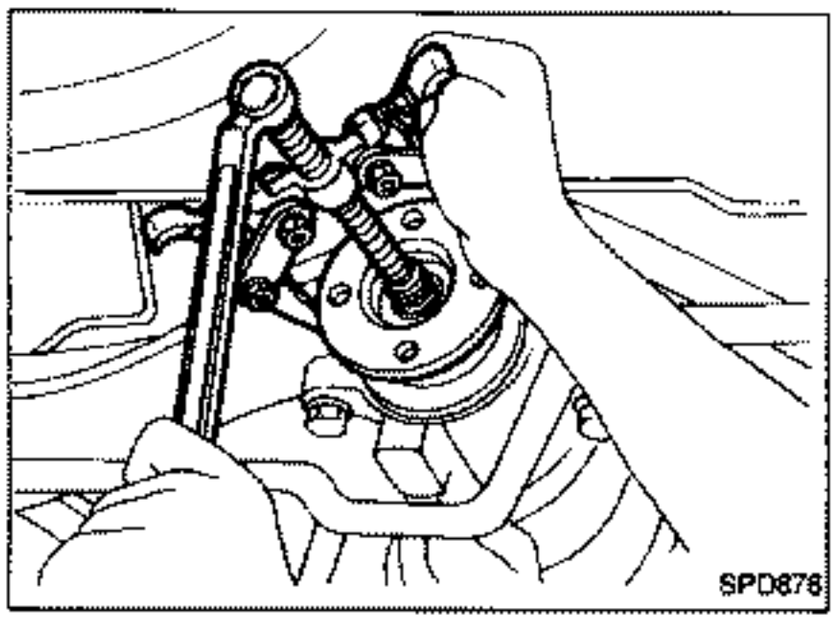

3. Remove companion flange.

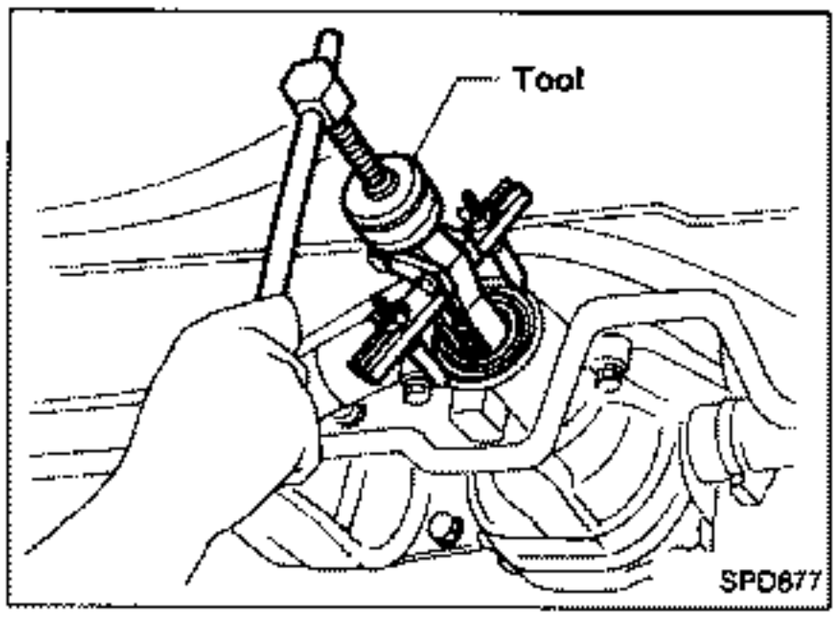

4. Remove front oil seal.

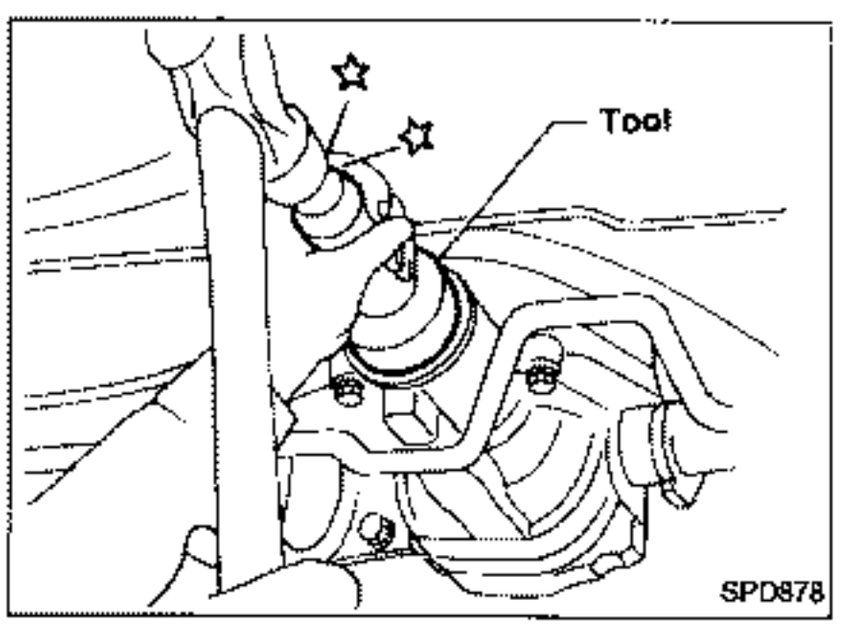

5. Apply multi-purpose grease to sealing lips of oil seal. Press front oil seal into carrier.
6. Install companion flange and drive pinion nut.
7. Install propeller shaft.

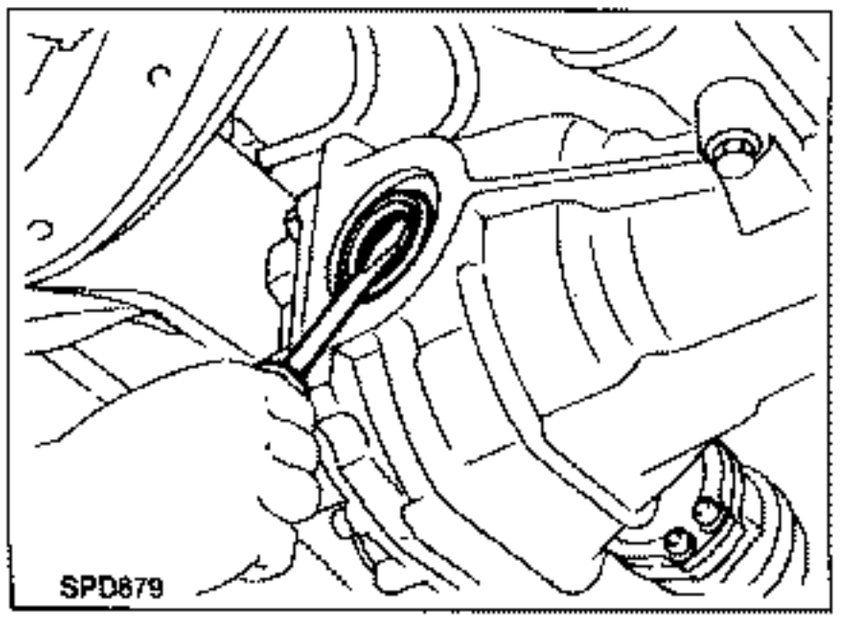

Side Oil Seal Replacement

1. Remove drive shafts.
   Refer to RA section.
2. Remove final drive side flange.
3. Remove oil seal.

Side Oil Seal Replacement (Cont'd)

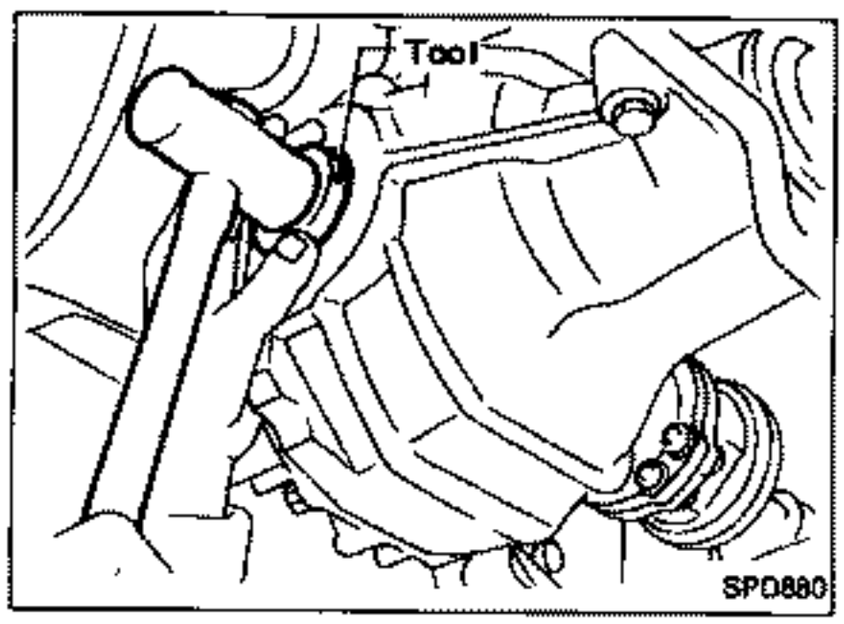

4. Apply multi-purpose grease to sealing lips of oil seal. Press-fit oil seal into carrier with Tool.
   Tool number:
   KV38100200 — R200V —
   KV38102510 — R230V —
5. Install final drive side flange and drive shaft.

Z.ONE.DATSUN

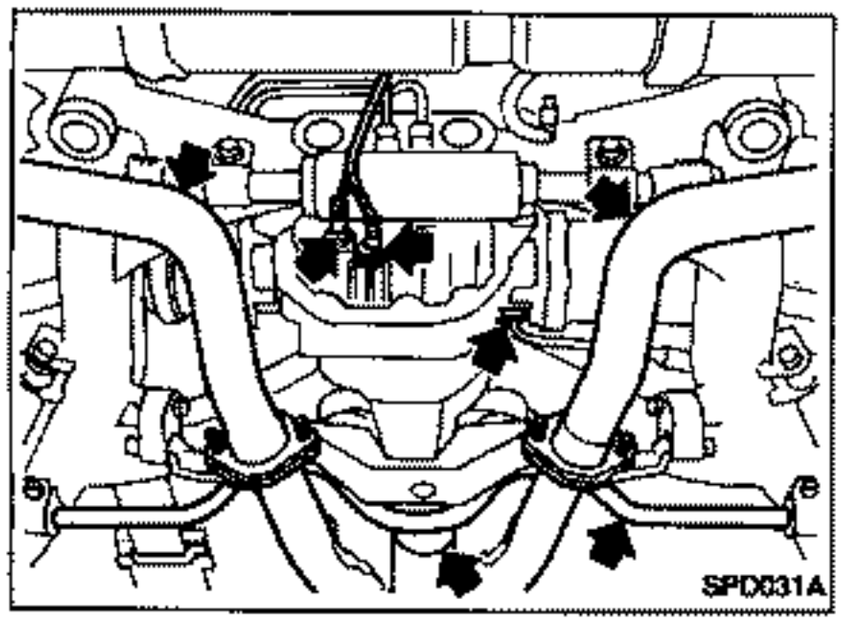

Removal

1. Remove exhaust tube.
2. Remove stabilizer bar.
3 Remove propeller shaft.

Plug rear end of transmission rear extension housing.

CAUTION:

- **Be careful not to damage splines, sleeve yoke and transmission rear oil seal when removing propeller shaft.**

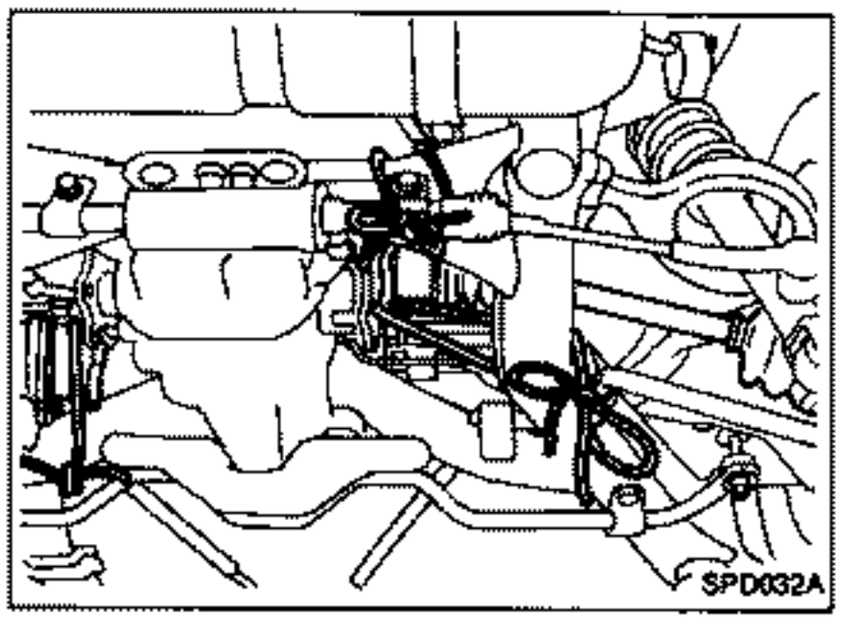

4. Disconnect drive shafts and pull them to wheel side with a wire.
5. Disconnect the following items if applicable.

- Oil cooler warning switch connector
- Oil cooler temperature switch connector
- A.B.S. sensor connector
- Hoses to oil cooler

When disconnecting oil cooler hoses, put a tray underneath.

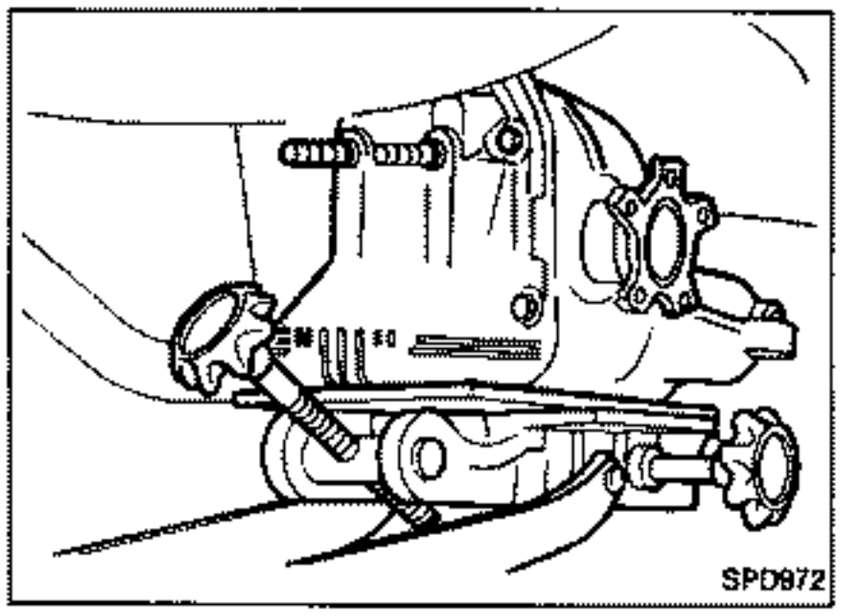

6. Support final drive with a jack.
7. Remove securing bolts and nuts from final drive.
8. Move final drive forward and lower with jack.

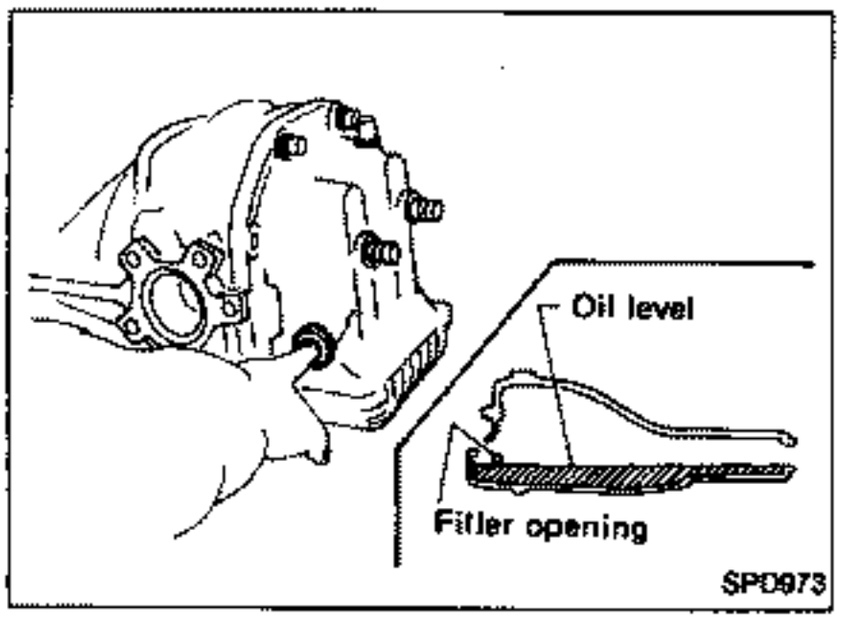

Installation

- Fill final drive with recommended gear oil.

Model R200V

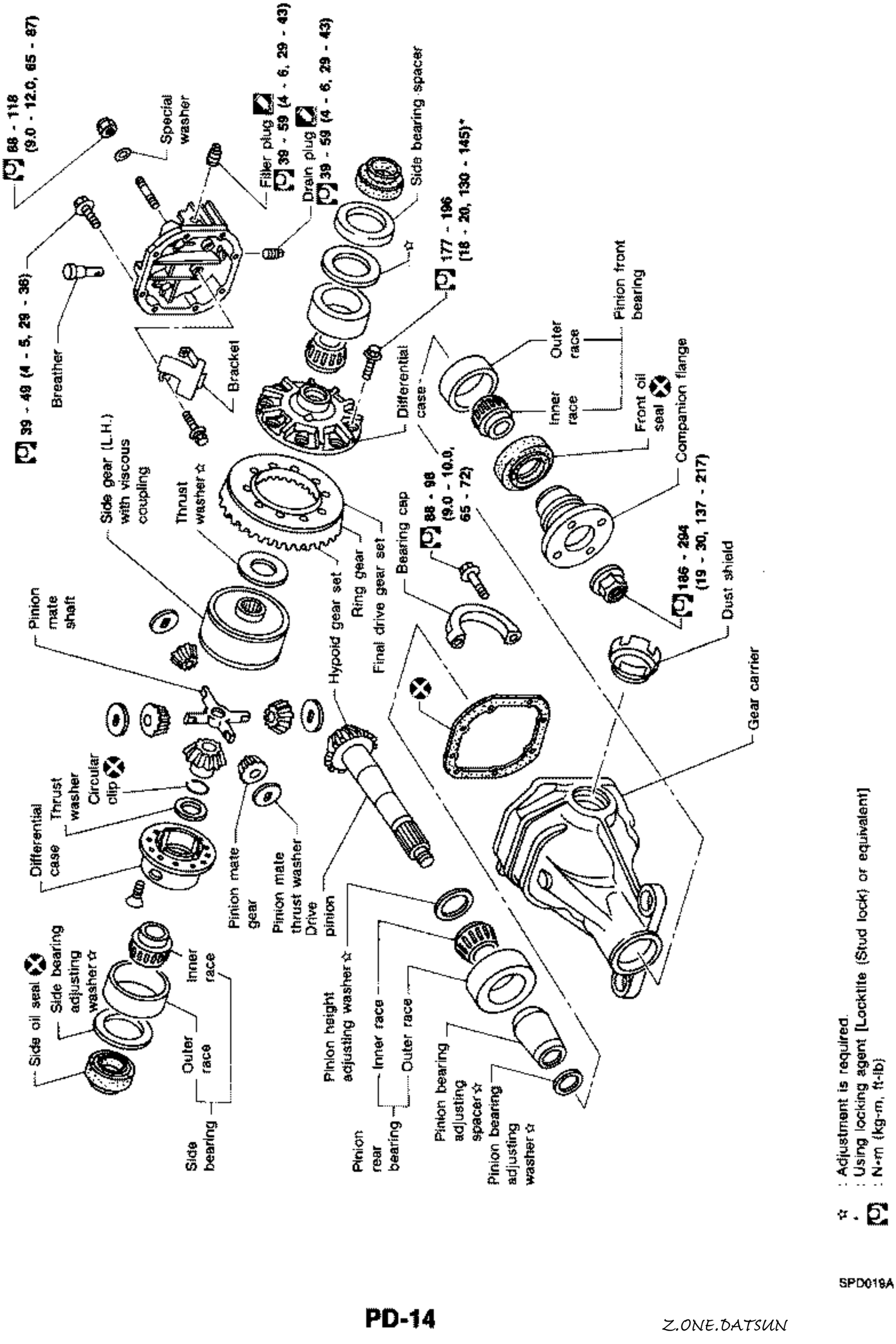

Z.ONE.DATSUN

Model R230V

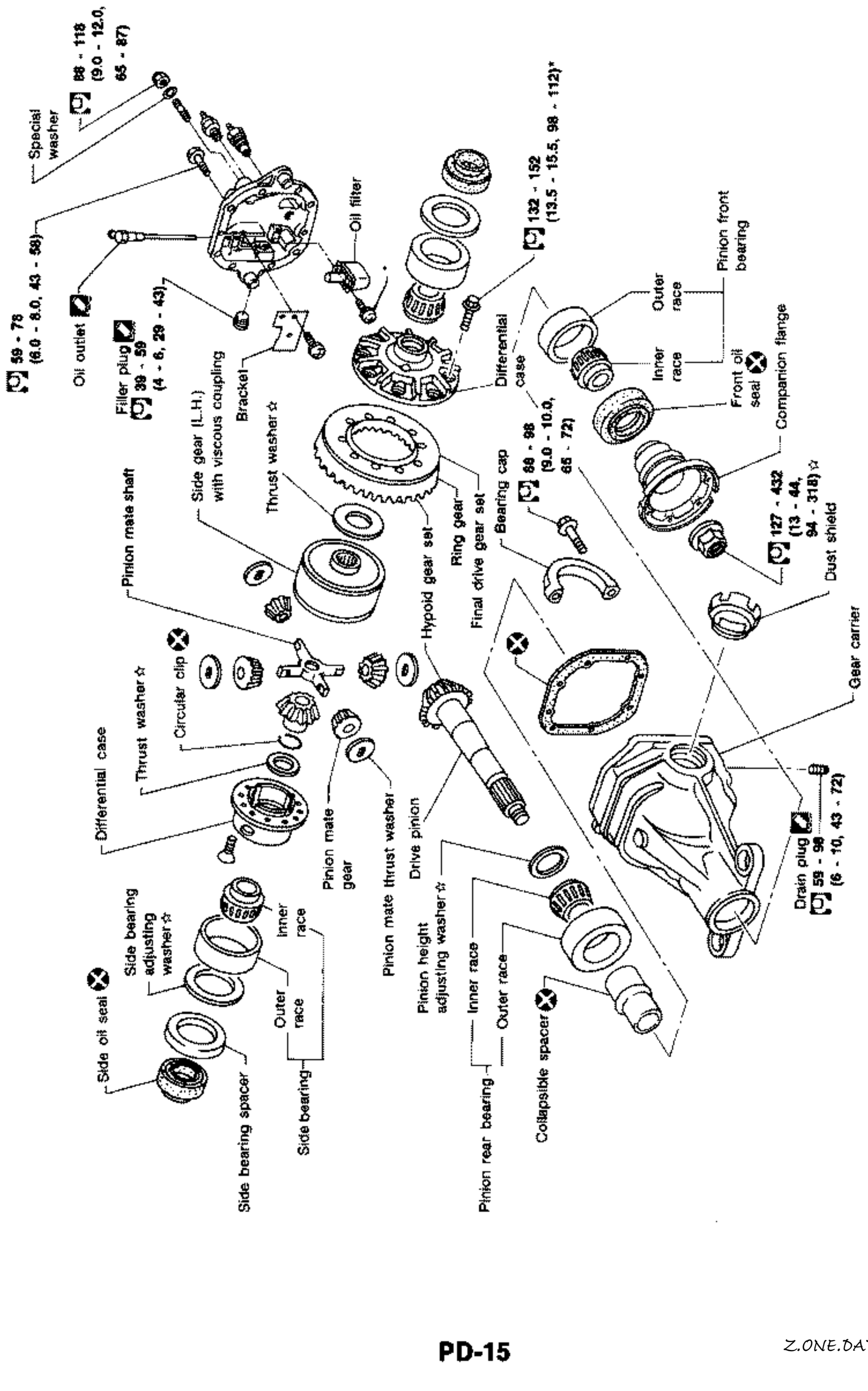

Z.ONE.DATSUN

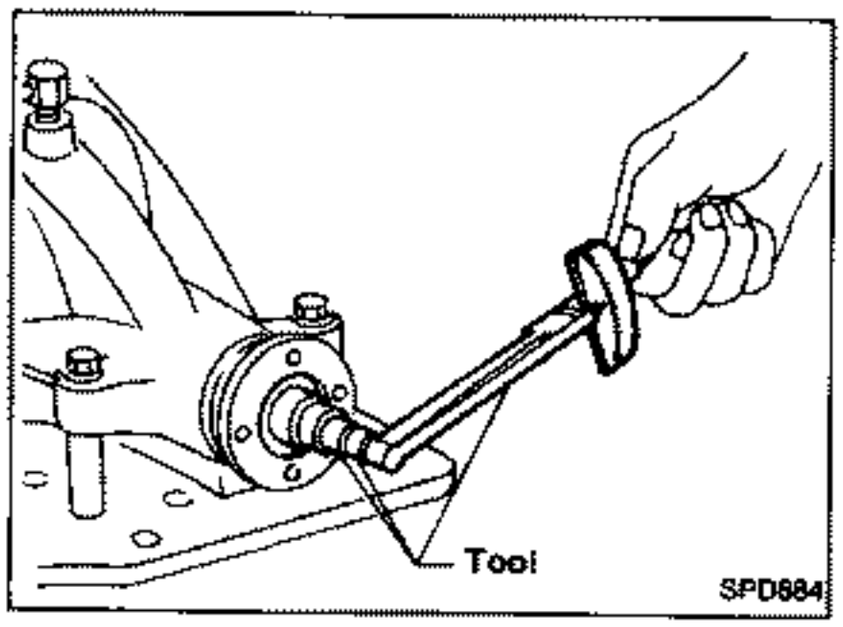

Pre-inspection

Before disassembling final drive, perform the following inspection.

- Total preload

1) Turn drive pinion in both directions several times to set bearing rollers.
2) Check total preload with Tool.
   Tool number: ST3127S000
   Total preload:
   1.4 - 1.7 N·m
   (14 - 17 kg-cm, 12 - 15 in-lb)

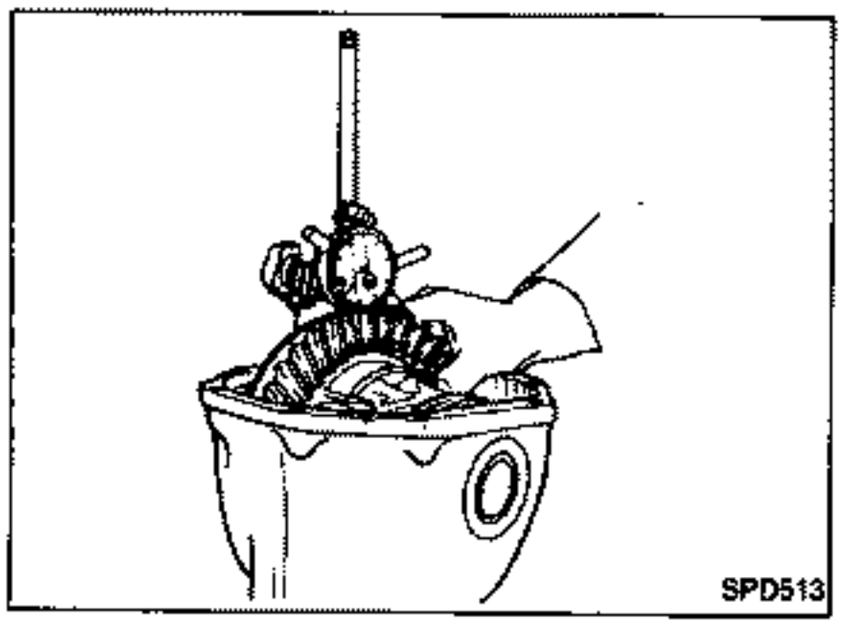

- Ring gear to drive pinion backlash
  Check ring gear-to-drive pinion backlash with a dial indicator at several points.
  Ring gear-to-drive pinion backlash:
  0.10 - 0.15 mm (0.0039 - 0.0059 in)

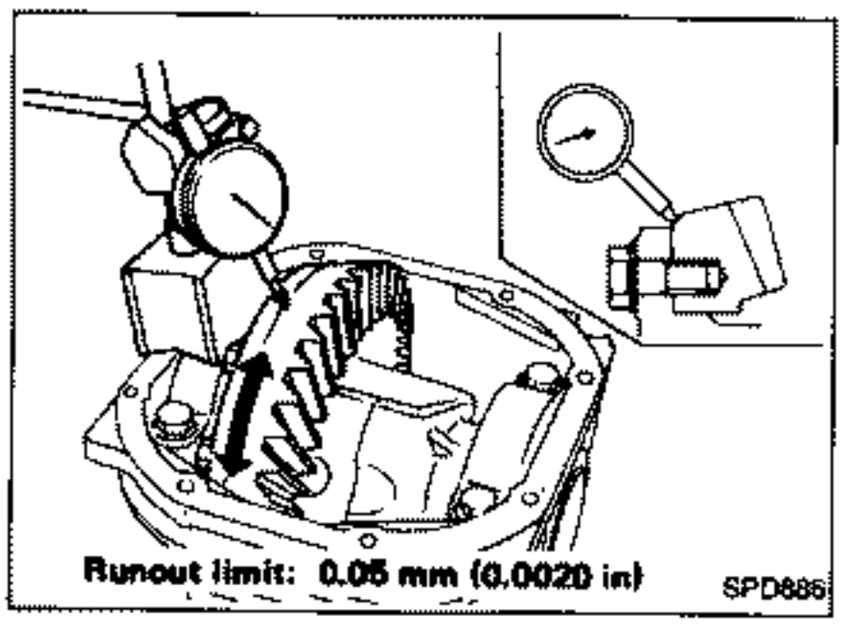

- Ring gear runout
  Check runout of ring gear with a dial indicator.
  Runout limit:
  0.05 mm (0.0020 in)
- Tooth contact
  Check tooth contact. (Refer to Adjustment.)

Differential Carrier

1. Using two 45 mm (1.77 in) spacers, mount carrier on Tool.
   Tool number: KV38100800

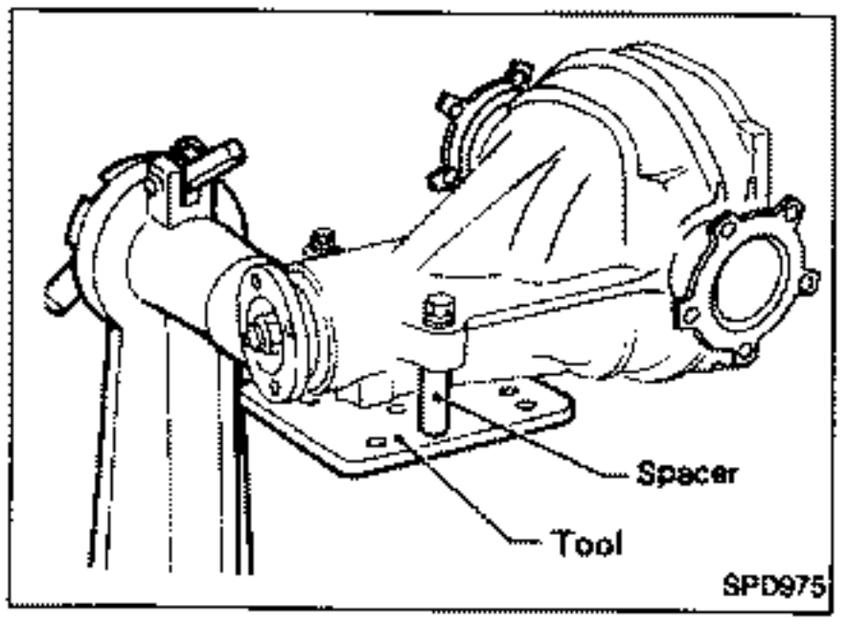

2. Paint or punch matchmarks on one side of the side bearing cap so it can be properly reinstalled.

Bearing caps are line-bored during manufacture. Replace them in their proper positions.

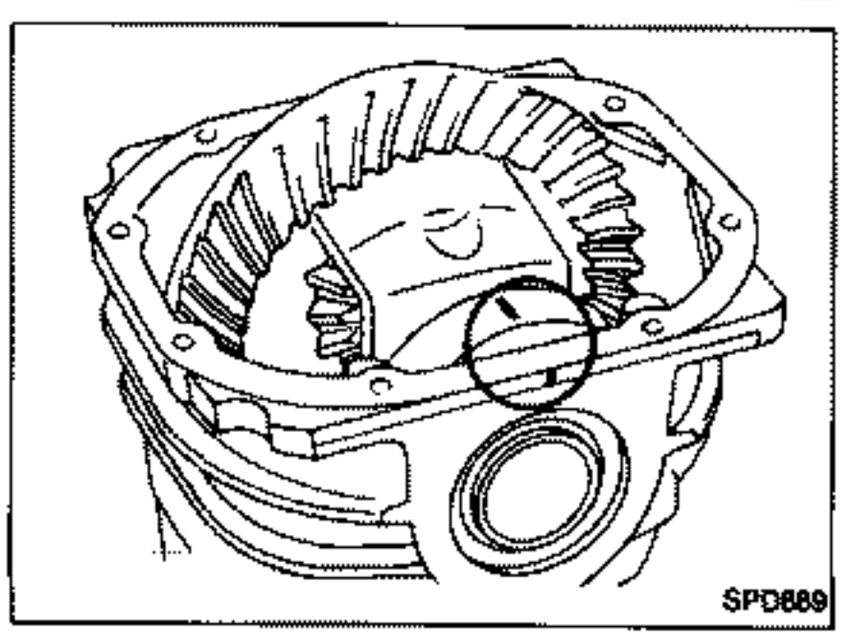

Z.ONE.DATSUN

Differential Carrier (Cont'd)

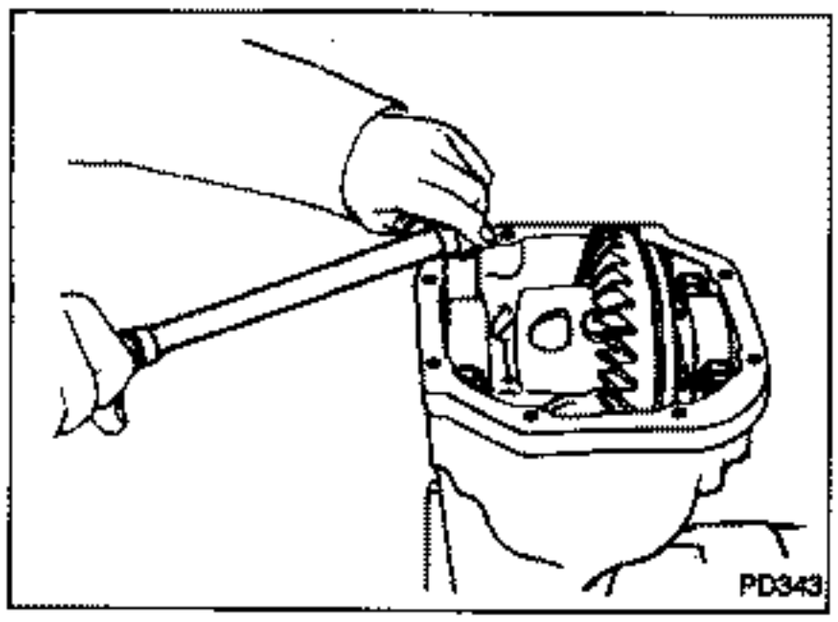

3. Remove side bearing caps.

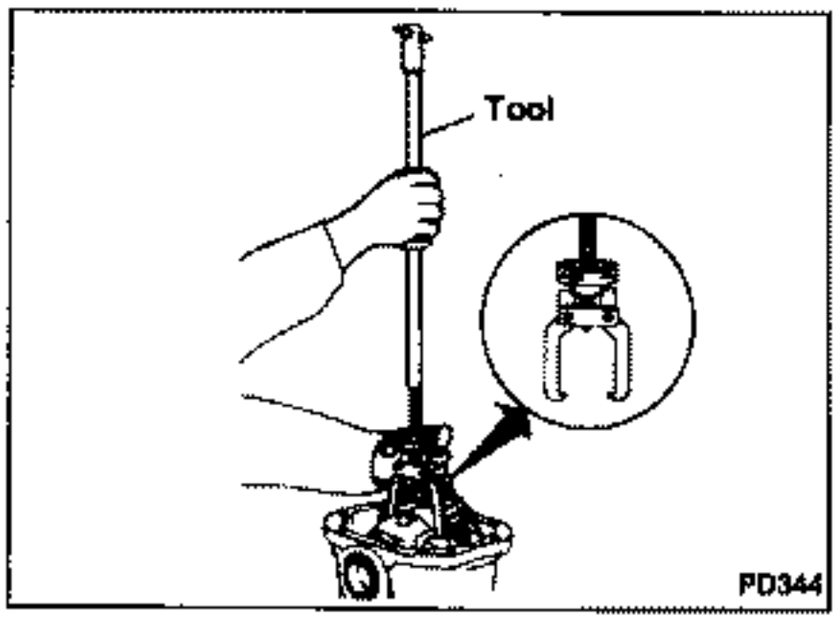

4. Lift differential case assembly out with Tool.
   Tool number: HT72400000

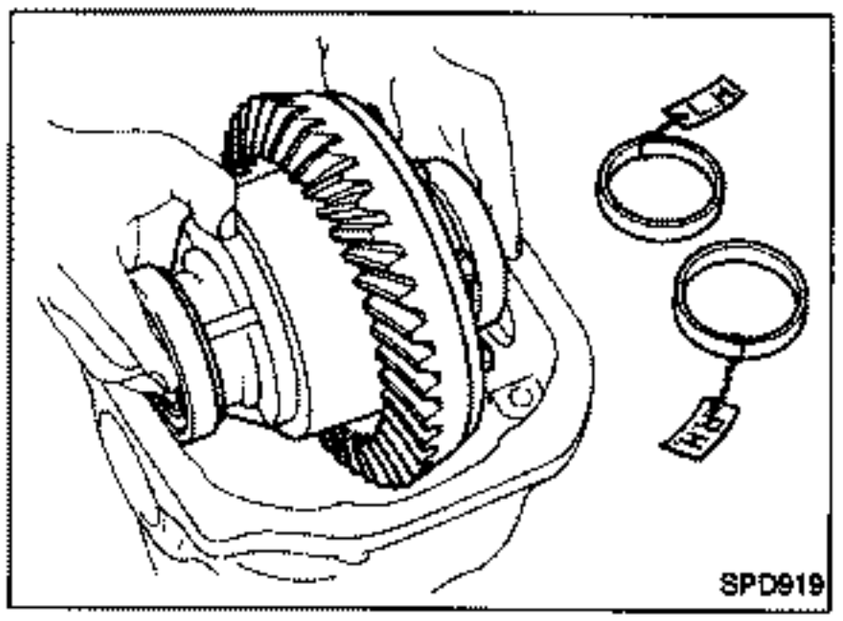

Keep the side bearing outer races together with inner cone — do not mix them up.
Also, keep side bearing spacer and adjusting shims together with bearings.

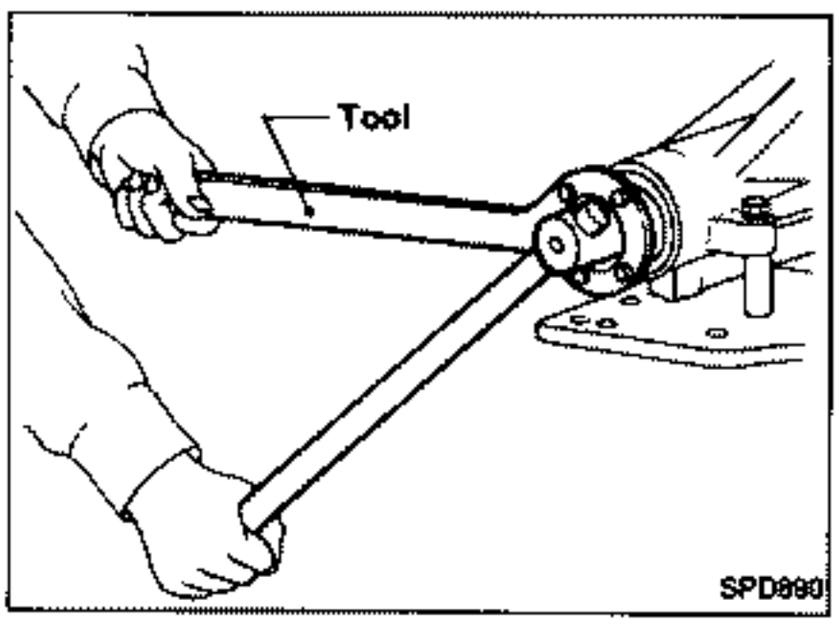

5. Loosen drive pinion nut and pull off companion flange.
   Tool number:
   ST38060002 — R200V —

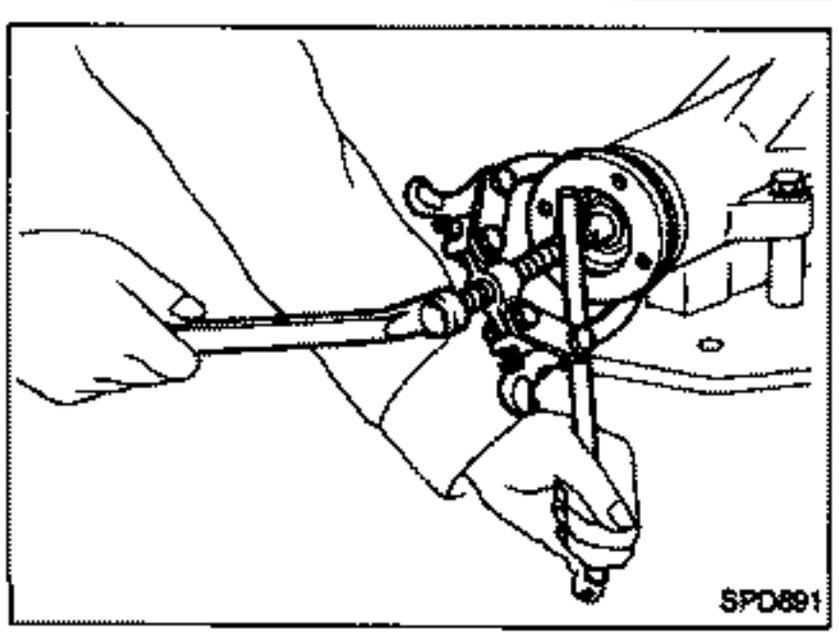

Differential Carrier (Cont'd)

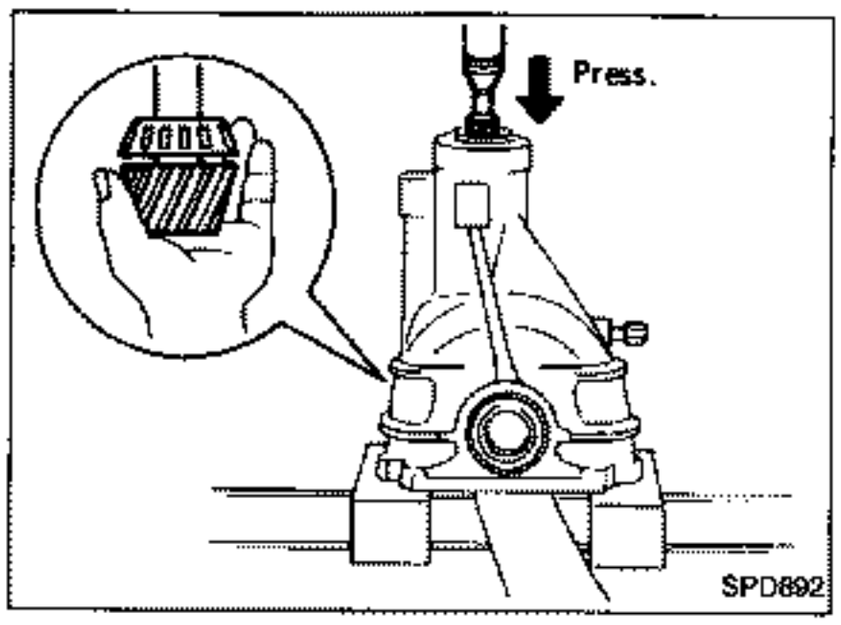

6. Take out drive pinion (together with rear bearing inner race, bearing spacer and adjusting washer).
7. Remove oil seal.
8. Remove front bearing inner race.
9. Remove side oil seal.

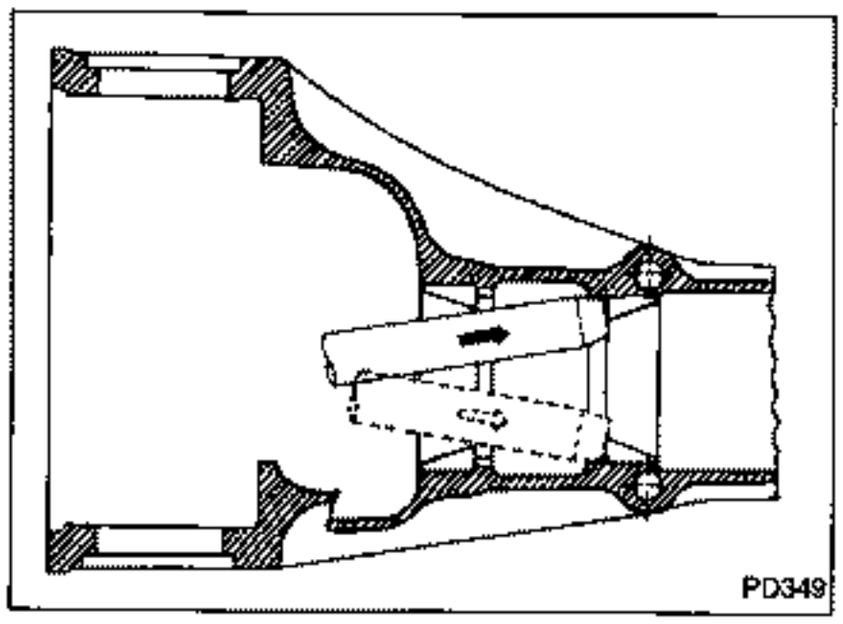

10. Remove pinion bearing outer races with a brass drift.

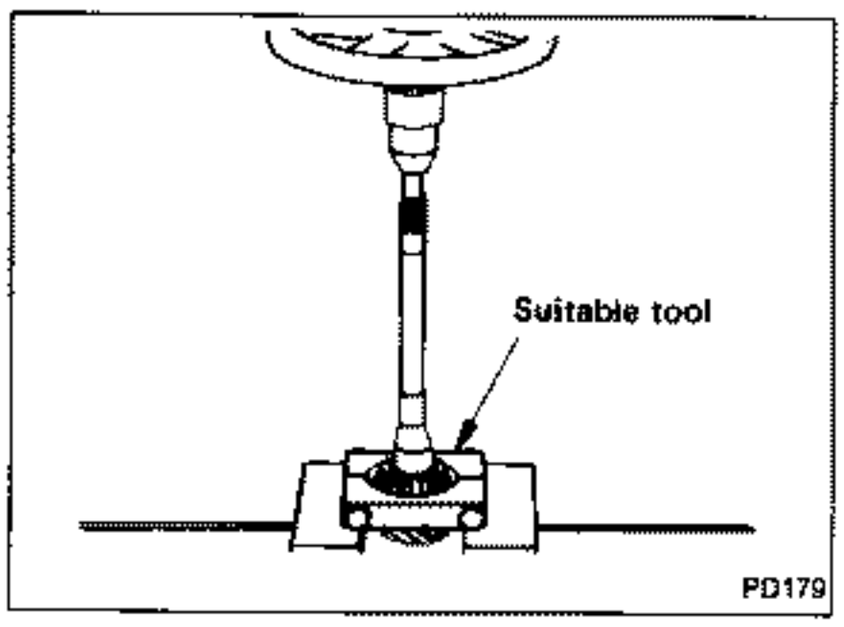

11. Remove pinion rear bearing inner race and drive pinion height adjusting washer with a suitable tool.

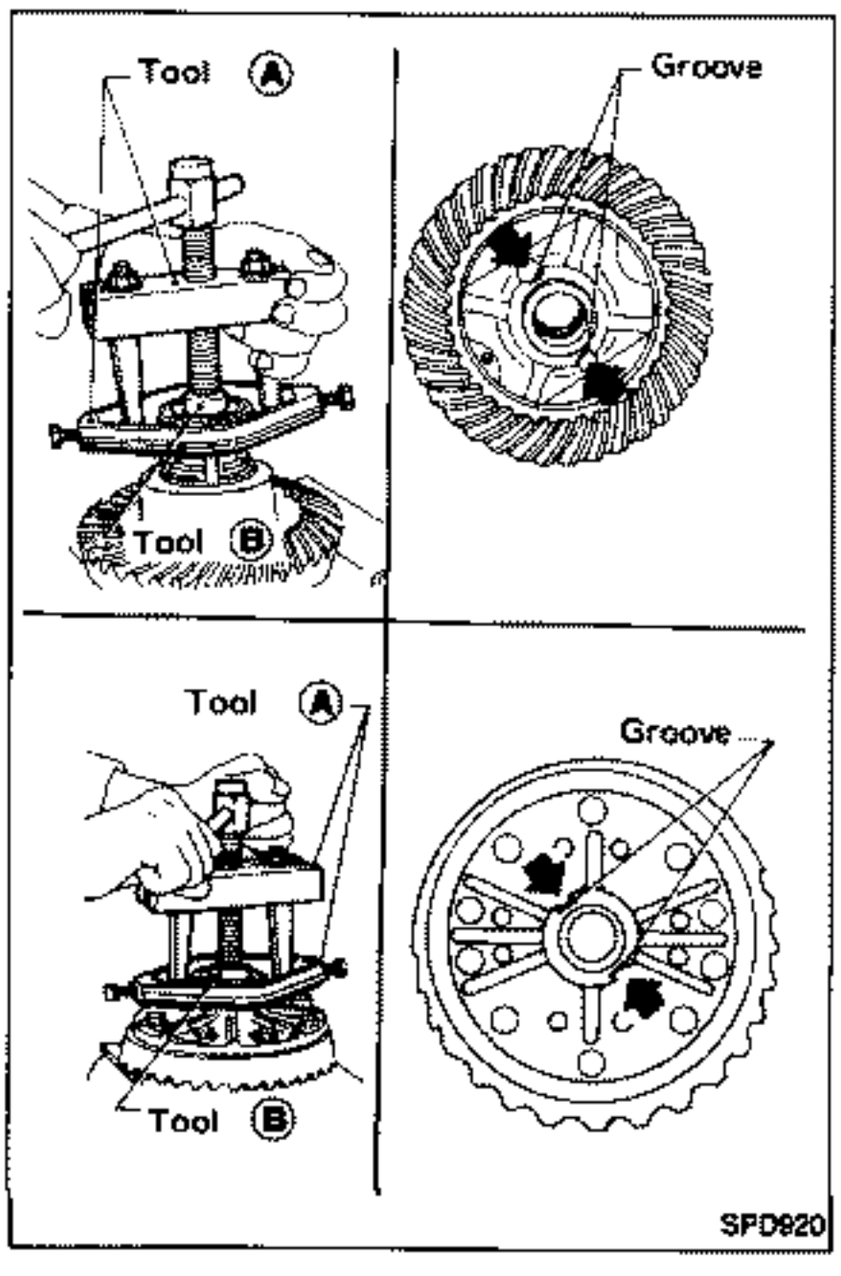

Differential Case

1. Remove side bearing inner cones.

To prevent damage to bearing, engage puller jaws in groove.

Tool number:

Ⓐ ST33051001

Ⓑ ST33061000 — R200V —

Z.ONE.DATSUN

Differential Case (Cont'd)

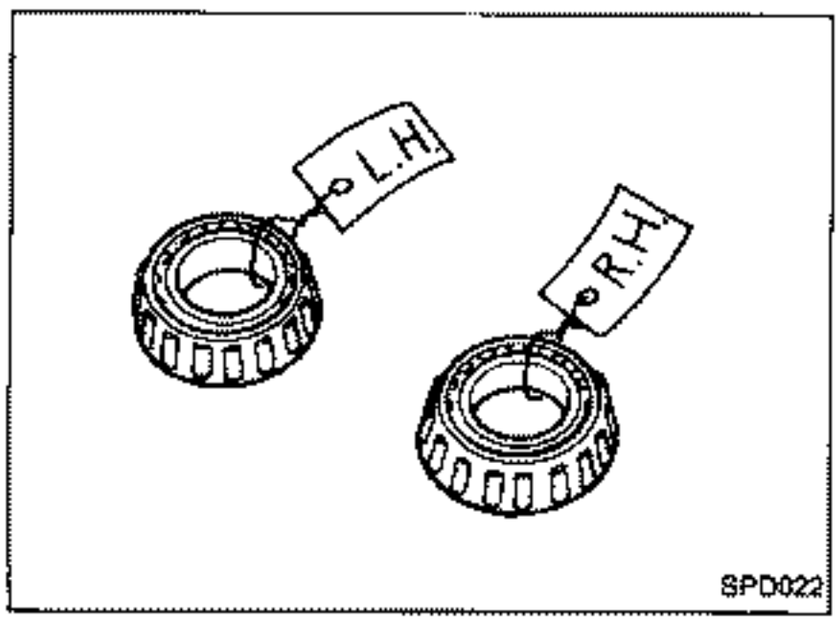

Be careful not to confuse left- and right-hand parts.

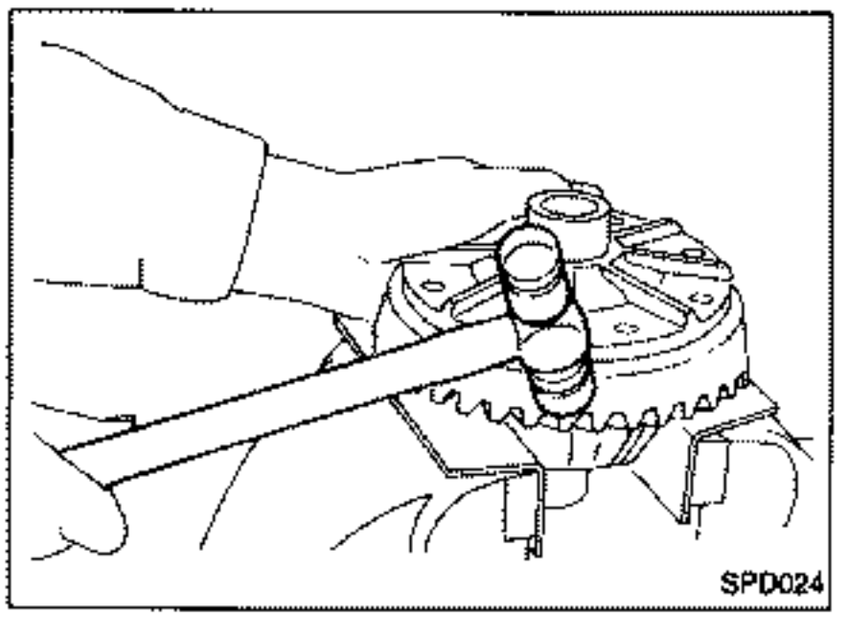

2. Loosen ring gear bolts in a criss-cross fashion.
3. Tap ring gear off the differential case with a soft hammer.

Tap evenly all around to keep ring gear from binding.

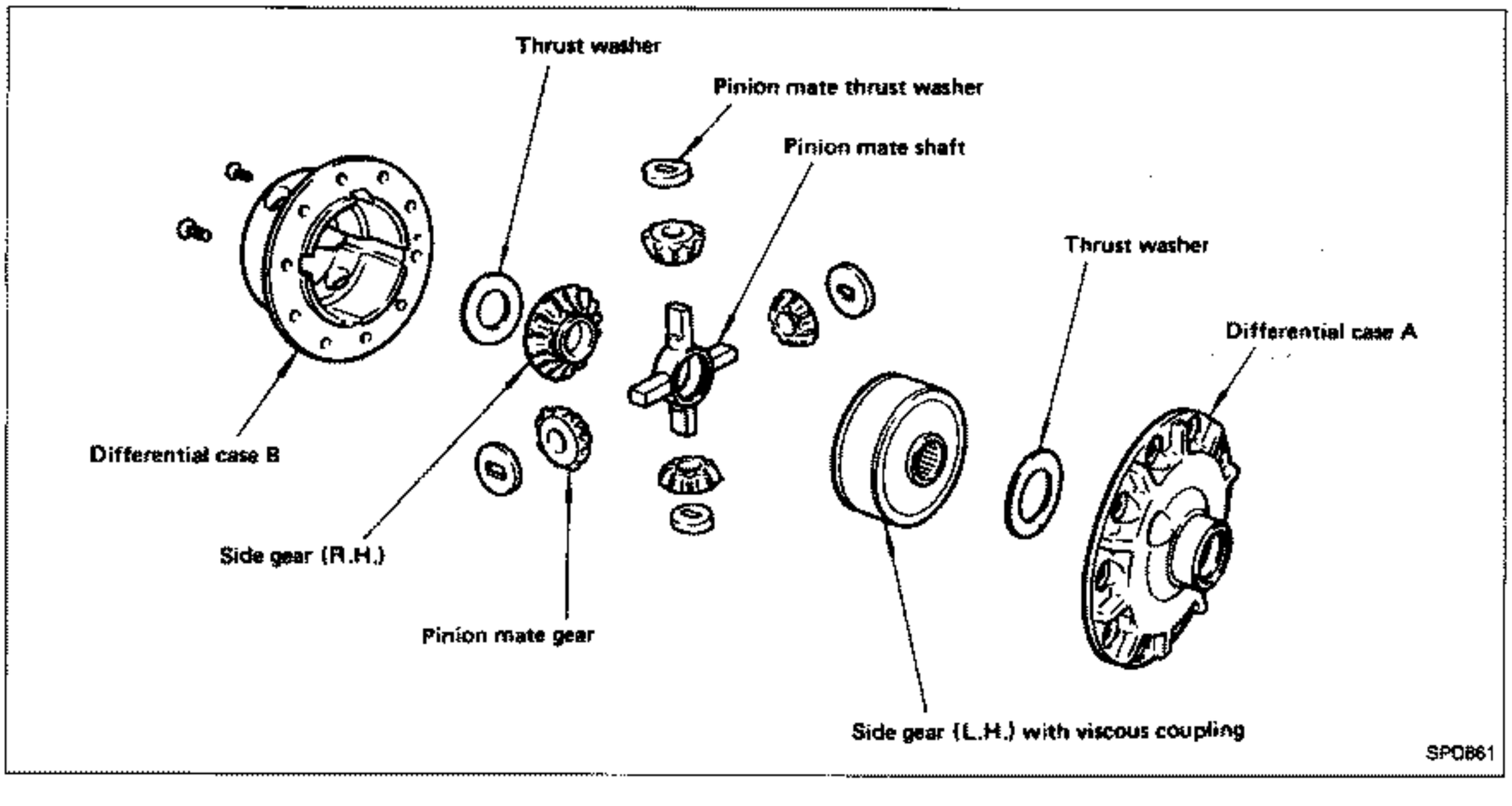

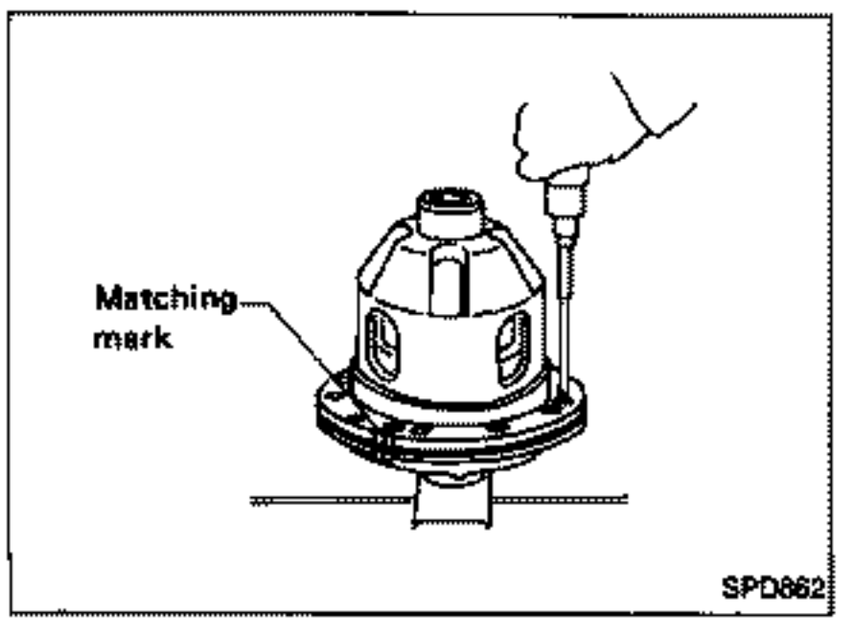

4. Loosen screws on differential cases A and B.
5. Separate differential cases A and B.

CAUTION:
Assemble differential case firmly.

Z.ONE.DATSUN

Contact Surfaces

1. Clean the disassembled parts in suitable solvent and blow dry with compressed air.
2. If following surfaces are found to be burred or scratched, smooth with oil stone.

- Differential case A
- Differential case B
- Side gear
- Pinion mate gear
- Pinion mate shaft

3. Check viscous coupling for oil leakage. If necessary, replace it with a new one.

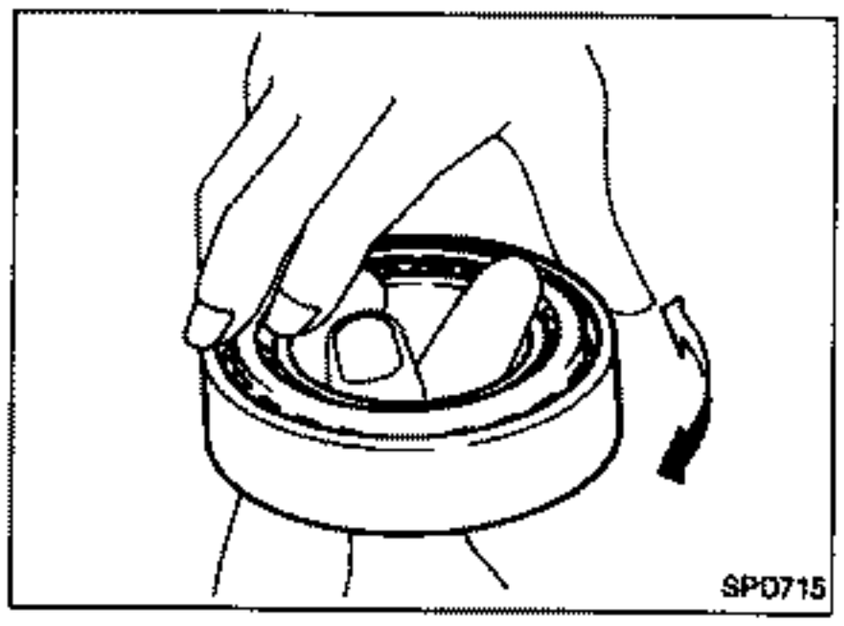

Bearing

1. Thoroughly clean bearing.
2. Check bearings for wear, scratches, pitting or flaking. Check tapered roller bearing for smooth rotation. If damaged, replace outer race and inner cone as a set.

To avoid confusion while calculating thickness of washers, it is absolutely necessary to stay with the metric system. If you measure anything in inches, **the results must be converted to the metric system.**

Drive Pinion Height

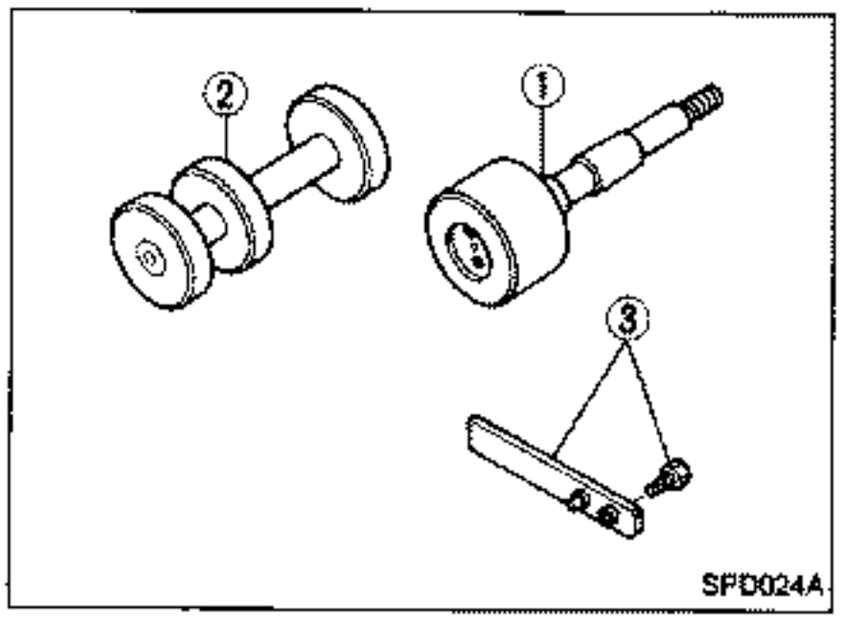

1. Prepare Tools for pinion height adjustment.
   — R200V —
   ① Dummy shaft (KV38103910)
   ② Height gauge (KV38100120)
   ③ Stopper (KV38100140)

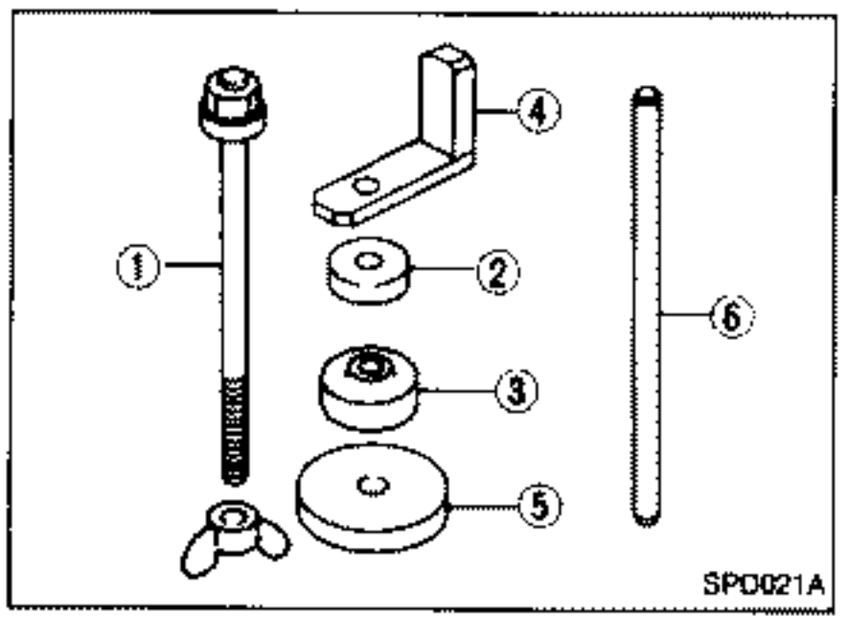

   — R230V —
   ① Dummy shaft (KV38107610)
   ② Rear bearing spacer (KV38107650)
   ③ Front bearing spacer (KV38107640)
   ④ Height gauge (KV38107620)
   ⑤ Side bearing adapter (KV38107660)
   ⑥ Adapter shaft (KV38107630)

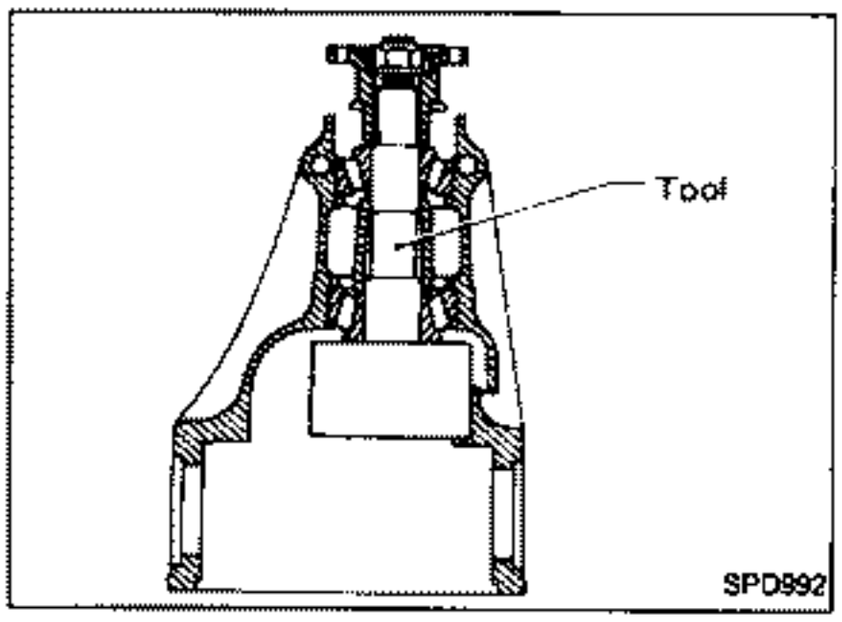

2. Lubricate bearings and set Tools as shown. Tighten nut carefully until bearings reach specified preload.
   — R200V —
   Tool: Dummy shaft (KV38103910)
   Bearing preload:
   1.0 - 1.4 N·m (10 - 14 kg-cm, 8.7 - 12.2 in-lb)

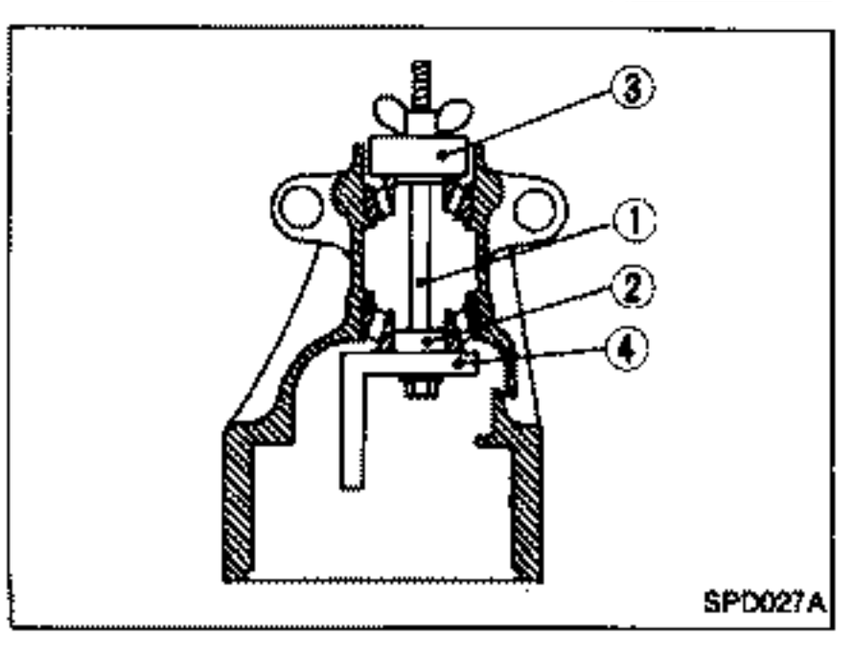

— R230V —
Tool:
① Dummy shaft (KV38107610)
② Rear bearing spacer (KV38107650)
③ Font bearing spacer (KV38107640)
④ Height gauge (KV38107620)
Bearing preload:
1.8 - 2.6 N·m (18 - 27 kg-cm, 16 - 23 in-lb)

Drive Pinion Height (Cont'd)

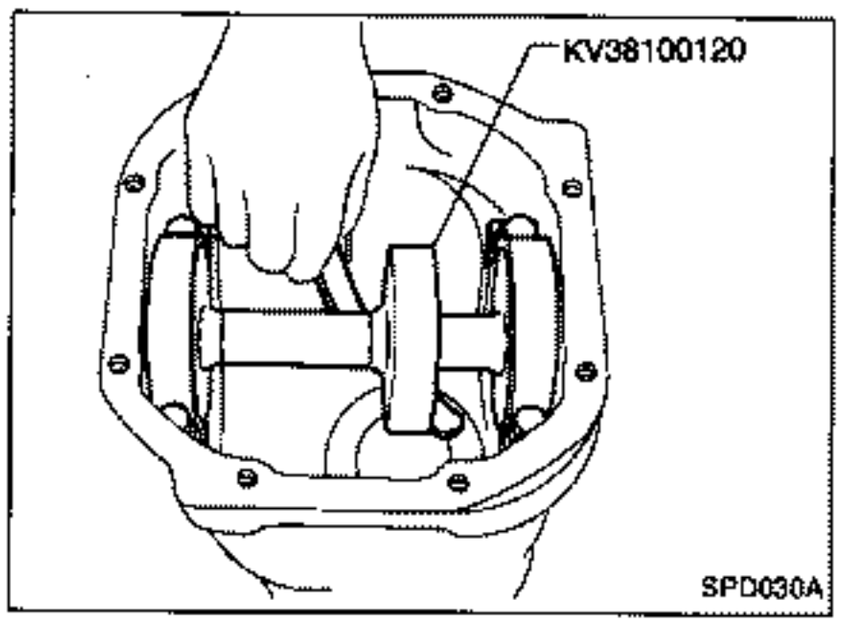

3. Attach Tools to gear carrier.
   — R200V —
   Measure clearance between height gauge and dummy shaft face.
   Add 0.5 mm (0.020 in) to your measurement and write this figure down.

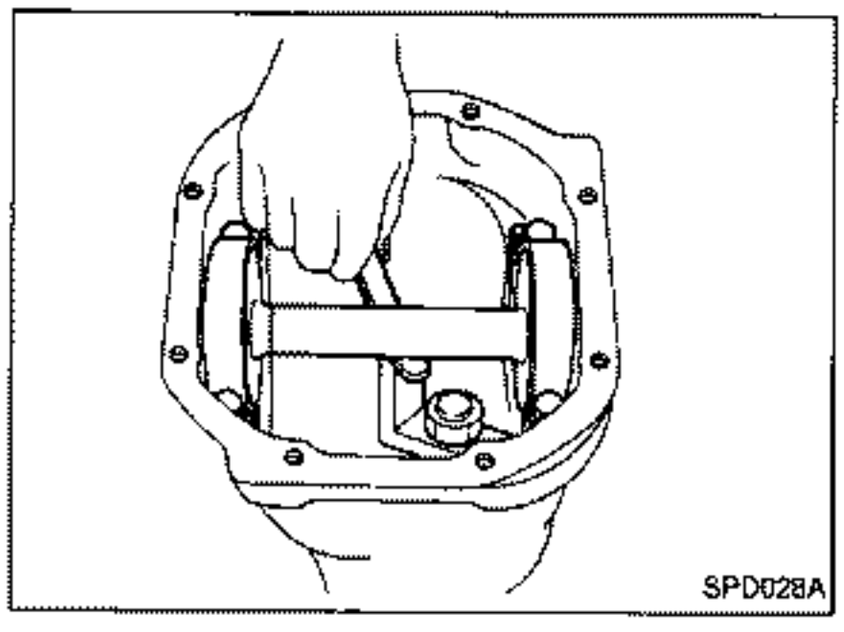

— R230V —
Measure clearance between height gauge and adapter shaft face and write this figure down.

Drive Pinion Height (Cont'd)

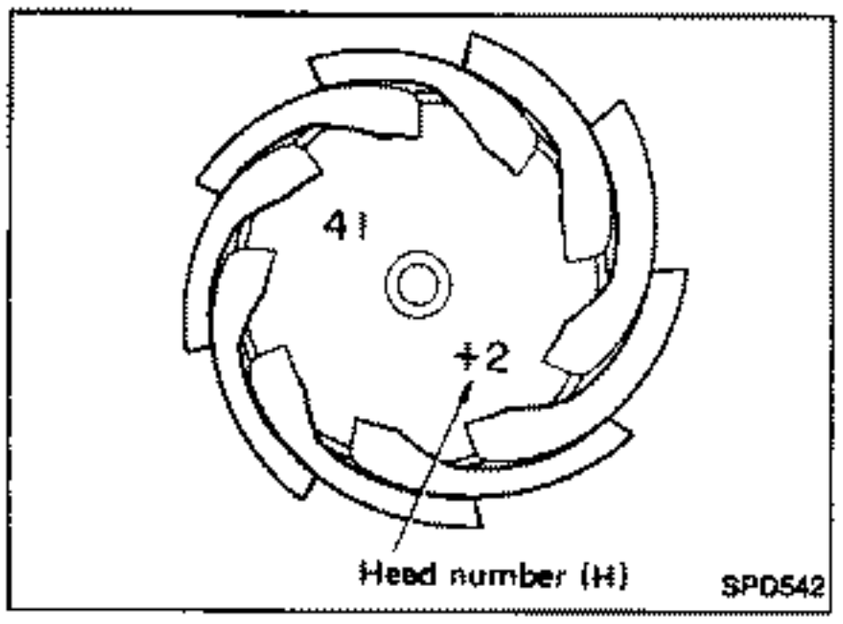

4. Correct the pinion height washer size by referring to the "pinion head number."

There are two numbers painted on the pinion gear. The first one refers to the pinion and ring gear as a matched set and should be the same as the number on the ring gear. The second number is the "pinion head height number", and it refers to the ideal pinion height from standard for quietest operation. Use the following chart to determine the correct pinion height washer.

Pinion head height number	Add or remove from the standard pinion height washer thickness measurement
–6	Add 0.06 mm (0.0024 in)
–5	Add 0.05 mm (0.0020 in)
–4	Add 0.04 mm (0.0016 in)
–3	Add 0.03 mm (0.0012 in)
–2	Add 0.02 mm (0.0008 in)
–1	Add 0.01 mm (0.0004 in)
0	Use the selected washer thickness
+1	Subtract 0.01 mm (0.0004 in)
+2	Subtract 0.02 mm (0.0008 in)
+3	Subtract 0.03 mm (0.0012 in)
+4	Subtract 0.04 mm (0.0016 in)
+5	Subtract 0.05 mm (0.0020 in)
+6	Subtract 0.06 mm (0.0024 in)

5. Select the correct pinion height washer.
   Drive pinion height adjusting washer:
   Refer to S.D.S.

Z.ONE.DATSUN

Side Bearing Preload

1. To simplify the job, make a chart like the one below to organize your calculations.

LETTERS	VALUE	
	R200V	R230V
A: Left housing		
B: Right housing		
C: Differential case		
D: Differential case		
H: (+) or (–): ring gear		
E: Left side bearing		
R200V (= 21 - Measured height)		—
R230V (= 27 - Measured height)	—	
F: Right side bearing		
R200V (= 21 - Measured height)		—
R230V (= 27 - Measured height)	—	
G: Side bearing spacer (= 8.1 - measured thickness)		
X:	1.97	1.95
Y:	2.07	2.05

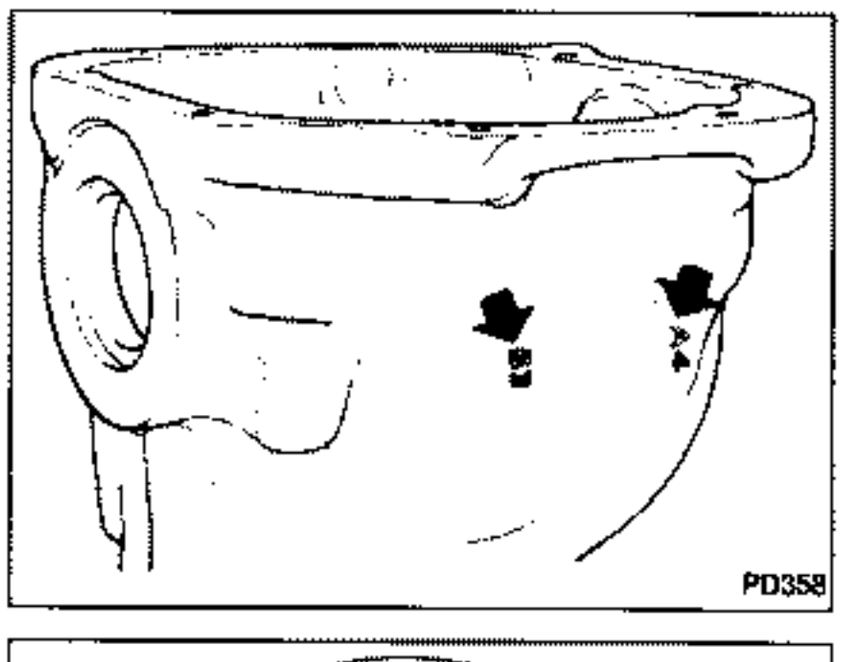

2. Write the following numbers down in the chart.
If numbers for A, B, C, D and H are not given, regard them as zero.
A & B: Figures marked on gear carrier

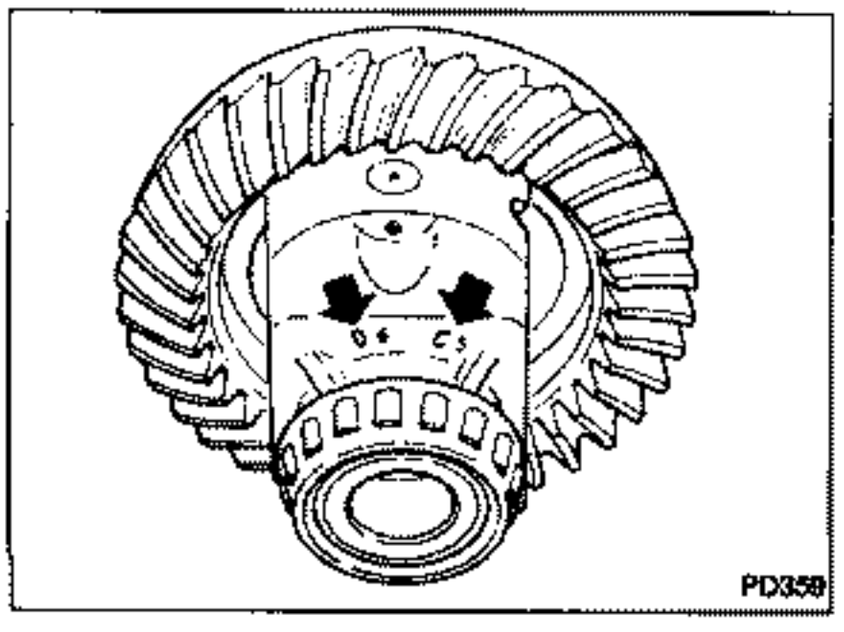

C & D: Figures marked on differential case

Side Bearing Preload (Cont'd)

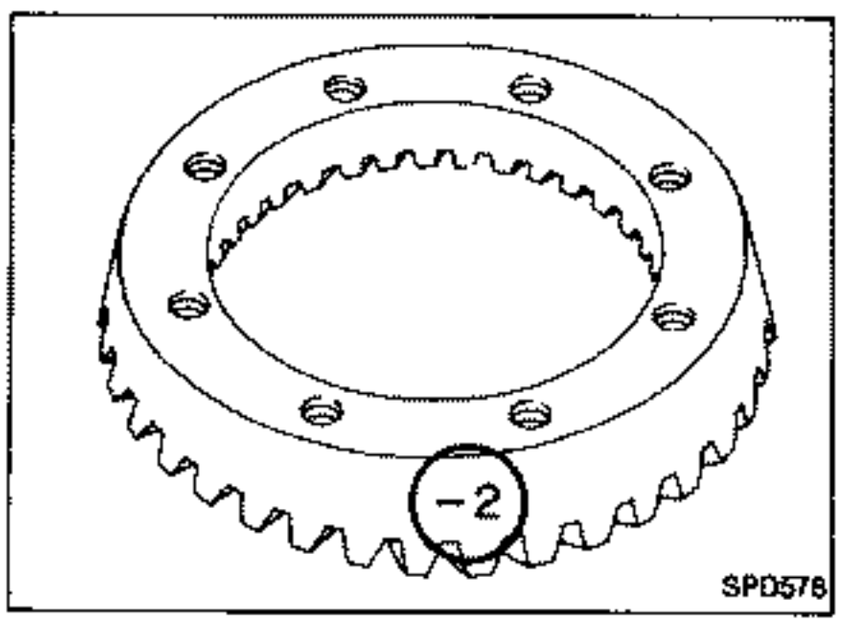

H: Figure marked on ring gear
Do not confuse negative and positive values.

3. Calculate "E" and "F" as follows:

— R200V —
E & F = 21 mm (0.83 in) — Measured bearing height
— R230V —
E & F = 27 mm (1.06 in) — Measured bearing height

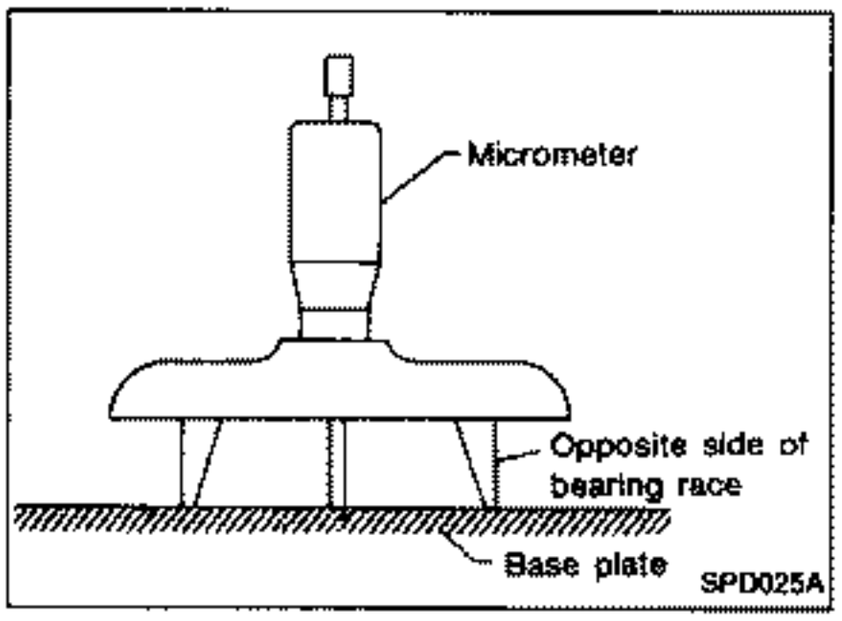

Bearing height can be measured as follows:
a. Measure height of bearing race which will be used as a base for the opposite side of a side bearing assembly.

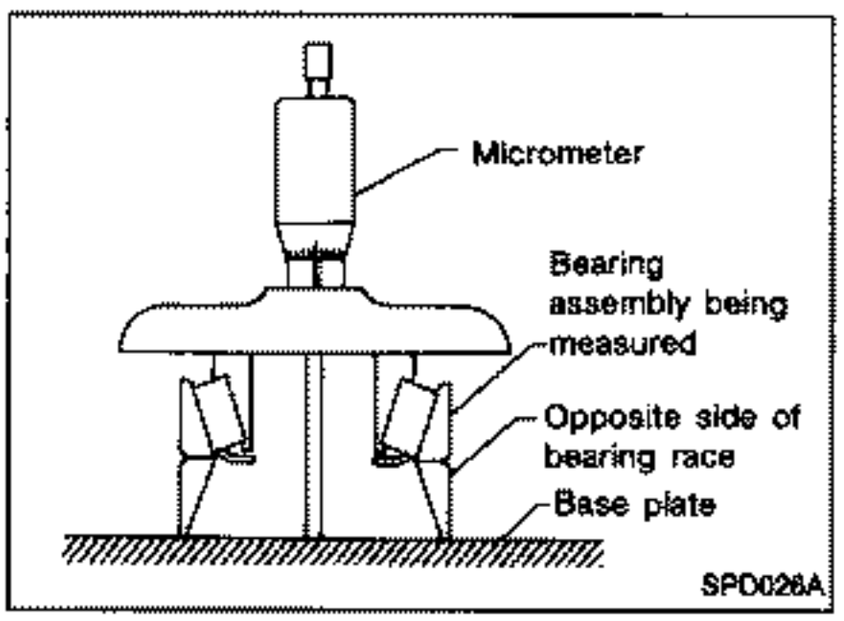

b. Set bearing assembly to be measured on the base race and measure the total height.
Lubricate bearing assembly and turn it several times to settle it on the base for accurate measurement.
c. Subtract base race height from total height.

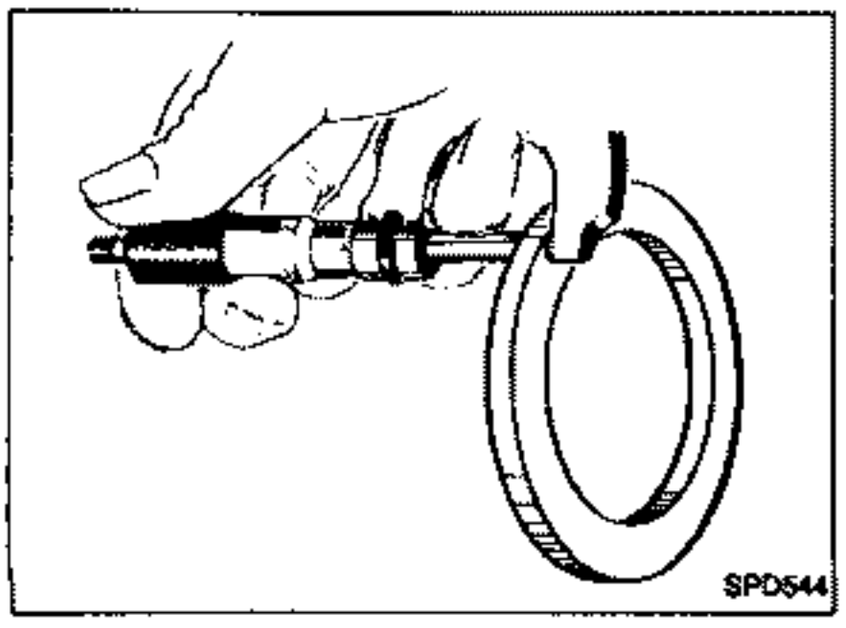

4. Calculate "G".
G: This is the difference in thickness of side spacer from standard width [8.10 mm (0.3189 in)].
G = 8.10 mm (0.3189 in) — Measured thickness

Side Bearing Preload (Cont'd)

LETTERS	VALUE	
	R200V	R230V
A: Left housing		
B: Right housing		
C: Differential case		
D: Differential case		
H: (+) or (−): ring gear		
E: Left side bearing		
R200V (= 21 − Measured height)		—
R230V (= 27 − Measured height)	—	
F: Right side bearing		
R200V (= 21 − Measured height)		—
R230V (= 27 − Measured height)	—	
G: Side bearing spacer (= 8.1 − measured thickness)		
X:	1.97	1.95
Y:	2.07	2.05

Calculations:

Side bearing spacer is used on the right

Left side washer thickness

$$T_1 = (A - C + D - H) \times 0.01 + E + Y$$

Right side washer thickness

$$T_2 = (B - D + H) \times 0.01 + F + G + X$$

Side bearing spacer is used on the left

Left side washer thickness

$$T_1 = (A - C + D - H) \times 0.01 + E + G + X$$

Right side washer thickness

$$T_2 = (B - D + H) \times 0.01 + F + Y$$

Side Bearing Preload (Cont'd)

Example for R200V which has a side bearing spacer on the left:

A = 4	E = 0.18
B = 3	F = 0.15
C = 5	G = 0.08
D = 6	X = 1.97
H = –2	Y = 2.07

Left side washer thickness (with spacer)

$T_1 = (A - C + D - H) \times 0.01 + E + G + X$

4	A	
– 5	– C	
= –1		
+ 6	+ D	
= 5		
– (– 2)	– H	
= 7		
x 0.01	x 0.01	
= 0.07		
+ 0.18	+ E	
= 0.25		
+ 0.08	+ G	
= 0.33		
+ 1.97	+ X	
= 2.30		
T_1 = 2.30 mm		

Right side washer thickness (without spacer)

$T_2 = (B - D + H) \times 0.01 + F + Y$

3	B	
– 6	– D	
= – 3		
+ (– 2)	+ H	
= –5		
x 0.01	x 0.01	
= – 0.05		
+ 0.15	+ F	
= 0.10		
+ 2.07	+ Y	
= 2.17		
T_2 = 2.17 mm		

5. Select the proper shims. (Refer to S.D.S.)

If you cannot find the desired thickness of shims, use shims with the total thickness closest to the calculated value.

Tooth Contact

Checking gear tooth contact pattern is necessary to verify correct relationship between ring gear and drive pinion.
Hypoid gear set which is not positioned properly in relation to one another may be noisy, or have short life or both. With the checking of gear tooth contact pattern, the most desirable contact for low noise level and long life can be assured.

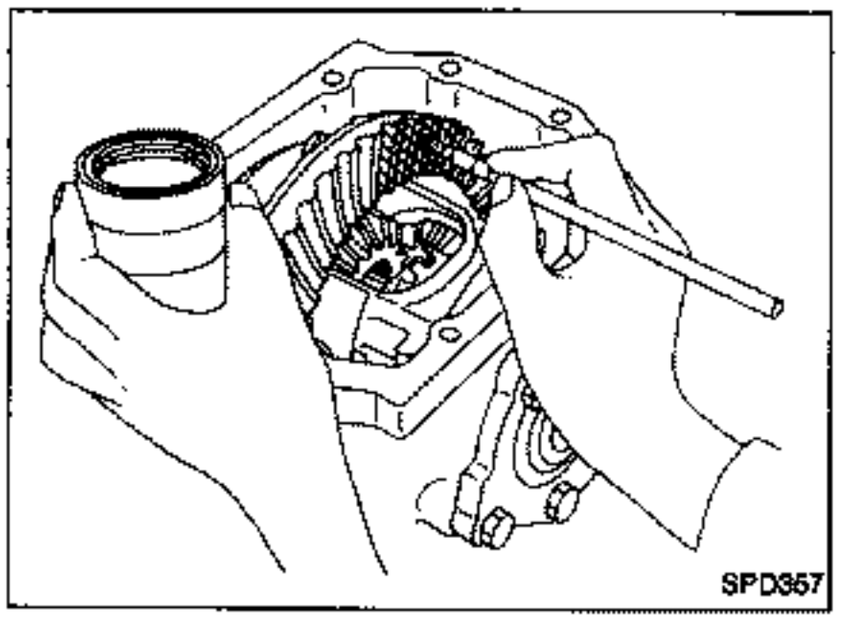

1. Thoroughly clean ring gear and drive pinion teeth.
2. Sparingly apply a mixture of powdered ferric oxide and oil or equivalent to 3 or 4 teeth of ring gear drive side.

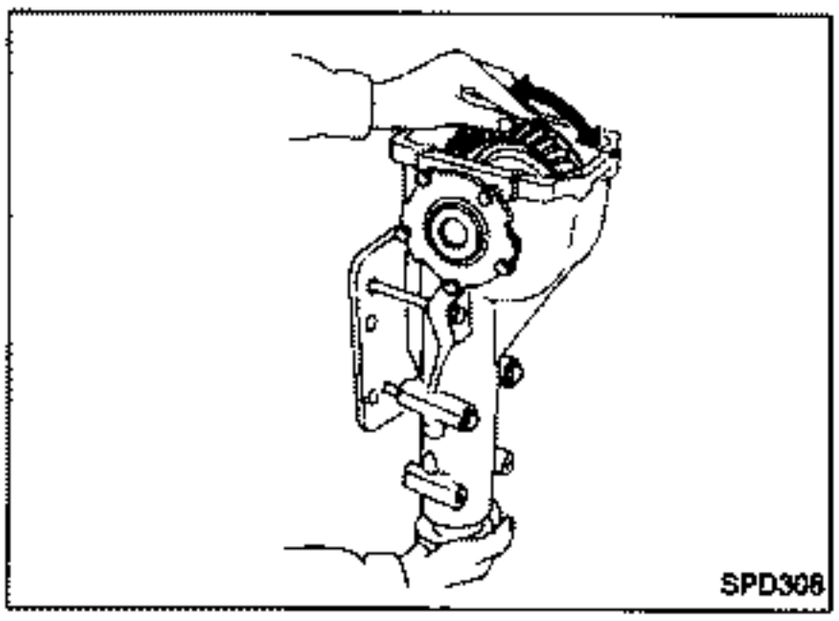

3. Hold companion flange steady by hand and rotate the ring gear in both directions.

Usually the pattern will be correct if you have calculated the shims correctly and the backlash is correct.
However, in rare cases you may have to use trial-and-error processes until you get a good tooth contact pattern.
The tooth pattern is the best indication of how well the final drive has been set up.

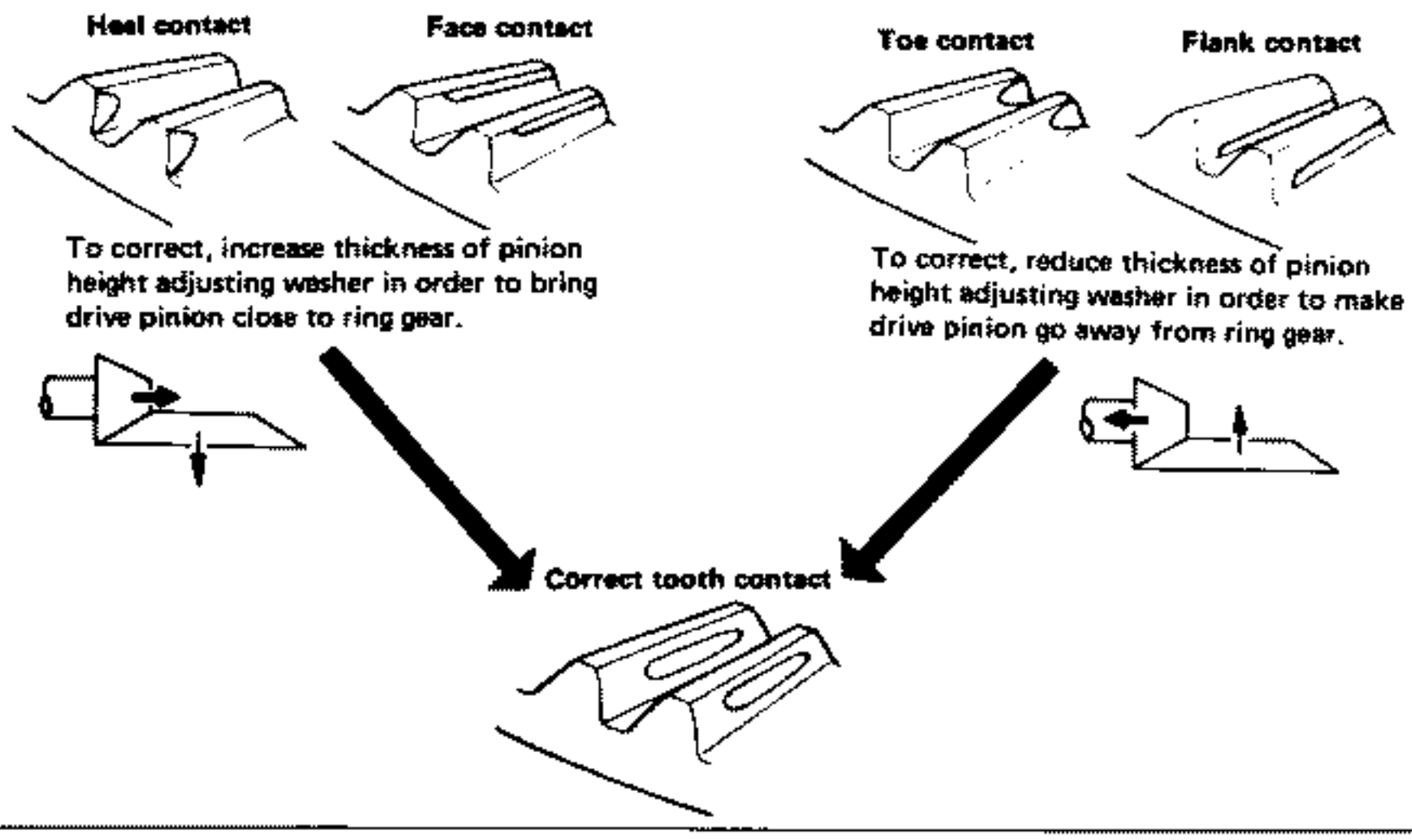

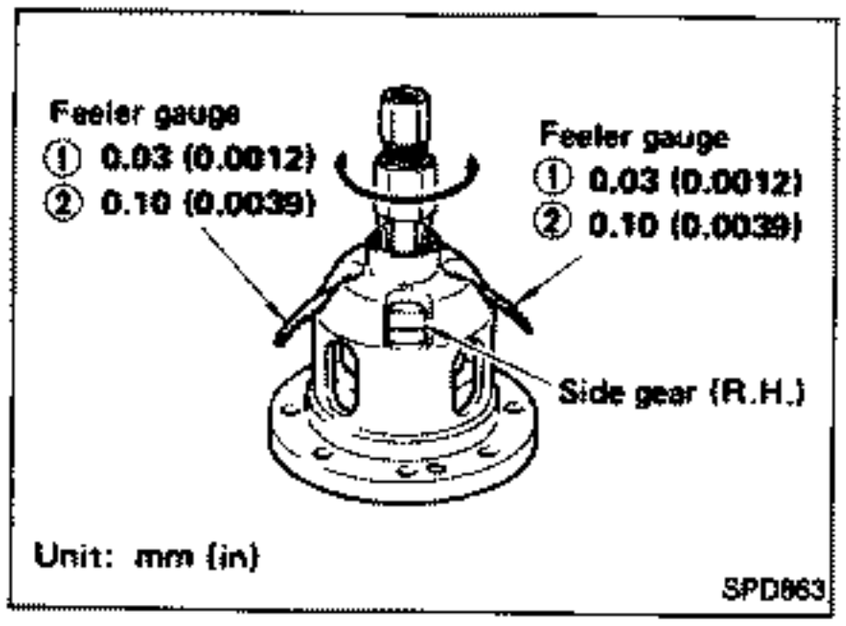

Differential Case

THRUST WASHER SELECTION

Whenever side gears or pinion mate gears are replaced, select suitable thrust washers as follows:

1. Clean side gears and pinion mate gears using white gasoline.
2. Before assembling gears, apply hypoid gear oil to frictional surfaces.
3. Install the previously removed thrust washer on right side gear. On left side gear, install a suitable thrust washer. Temporarily tighten differential cases using two screws.
4. Position differential assembly so that right side gear is on the upper side. Place a 0.03 mm (0.0012 in) feeler gauge (for example) between right side gear and thrust washer.

Do not insert feeler gauge in oil groove portion of differential case.

5. Also place a 0.03 mm (0.0012 in) additional feeler gauge between right side gear and thrust washer so that it is positioned diagonal to (180° apart from) the feeler gauge described previously.
6. Rotate right side gear with a suitable tool attached to splines.
   If right side gear cannot be rotated, replace thrust washer used on left side gear with a thinner one.
7. Replace both 0.03 mm (0.0012 in) feeler gauges with 0.10 mm (0.0039 in) gauges. At this point, make sure right side gear does not rotate. If it does, replace thrust washer on left side gear with a thicker one so that right side gear does not rotate.
8. As explained in above example, select suitable thrust washers to ensure that:

a) Both side gears rotate. [0.03 mm (0.0012 in) feeler gauges are used in this case.]
b) Side gear is held stationary. [0.10 mm (0.0039 in) feeler gauges are used in this case.]
(Refer to S.D.S.)

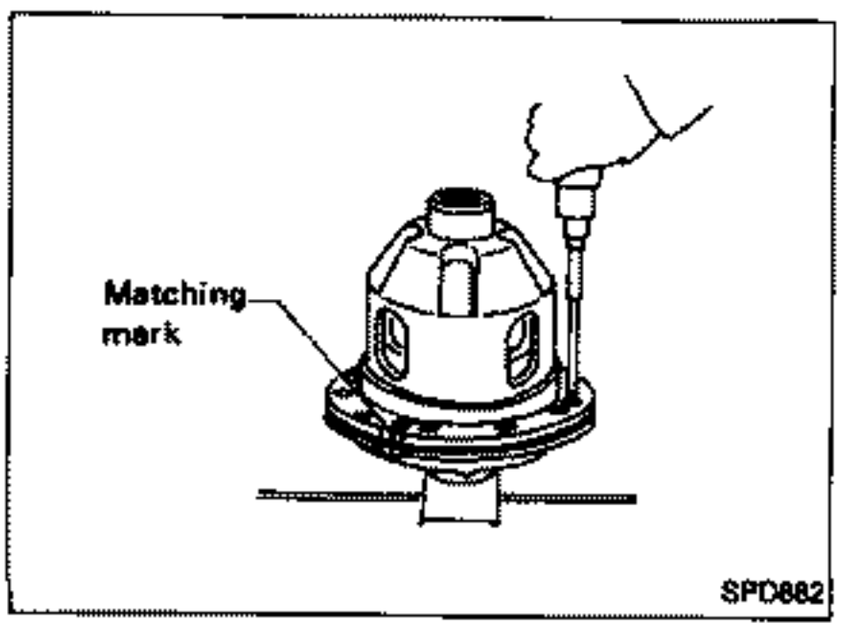

ASSEMBLY

1. Install differential cases A and B.

Differential Case (Cont'd)

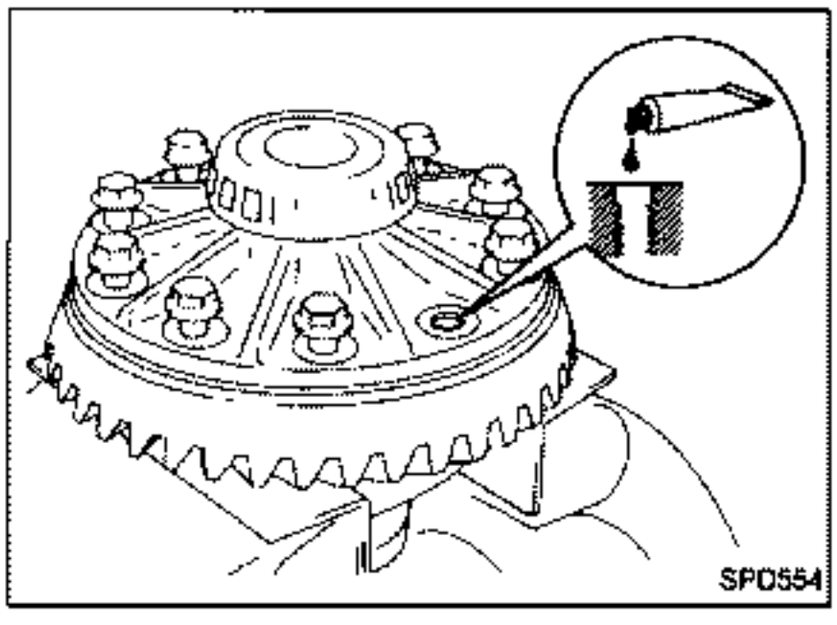

2. Place differential case on ring gear.
3. Apply locking sealant to ring gear bolts, and install them.

Tighten bolts in a criss-cross fashion, lightly tapping bolt head with a hammer.

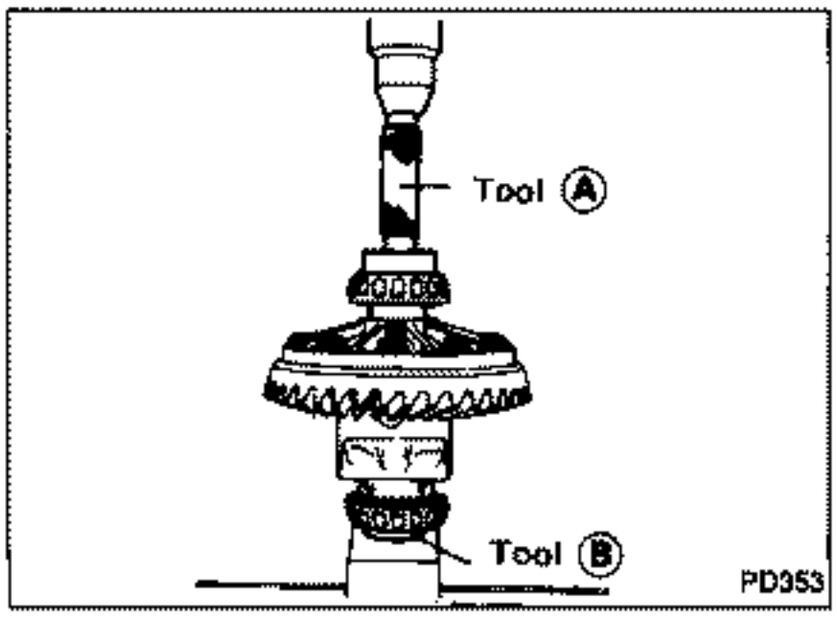

4. Press-fit side bearing inner cones on differential case with Tool.

Tool number:

Ⓐ KV38100300 — R200V —
Ⓑ ST33061000 — R200V —

Differential Carrier

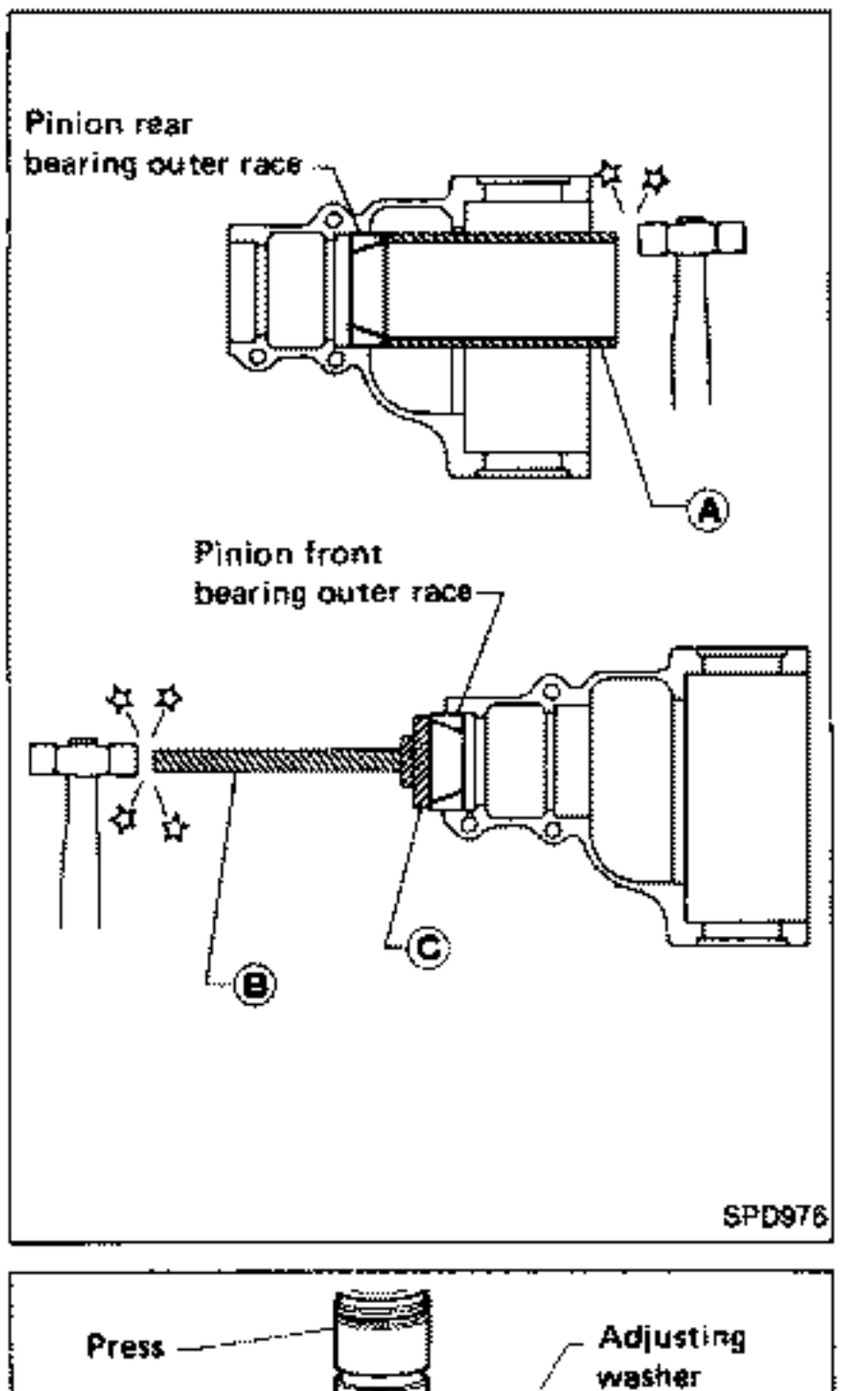

1. Press-fit front and rear bearing outer races with Tools.

Tool number:

Ⓐ suitable tool
Ⓑ ST30611000
Ⓒ ST30613000 — R200V —

2. Select pinion bearing adjusting washer and drive pinion bearing spacer, referring to ADJUSTMENT.

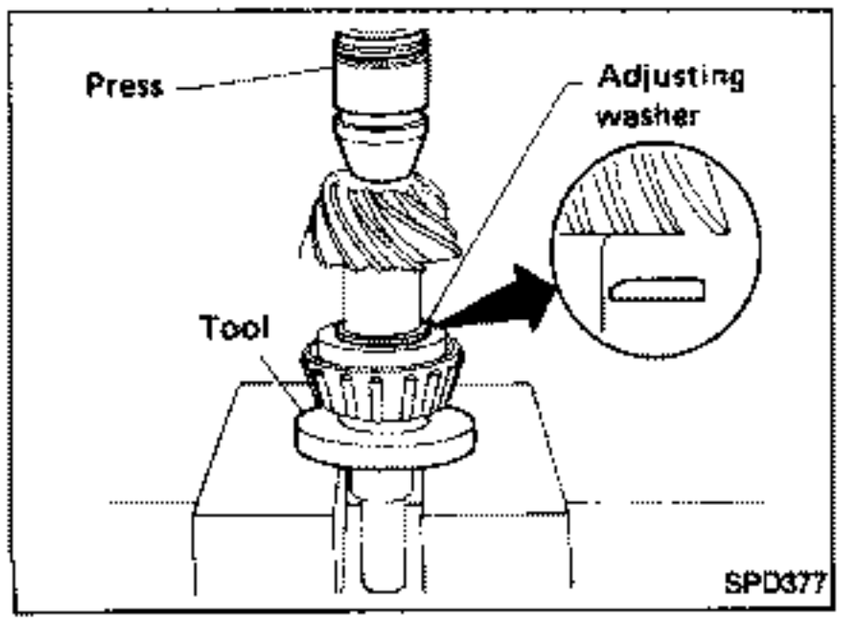

3. Install selected drive pinion height adjusting washer in drive pinion, and press-fit pinion rear bearing inner cone in it, using press and Tool.

Tool number:

ST30901000 — R200V —

Differential Carrier (Cont'd)

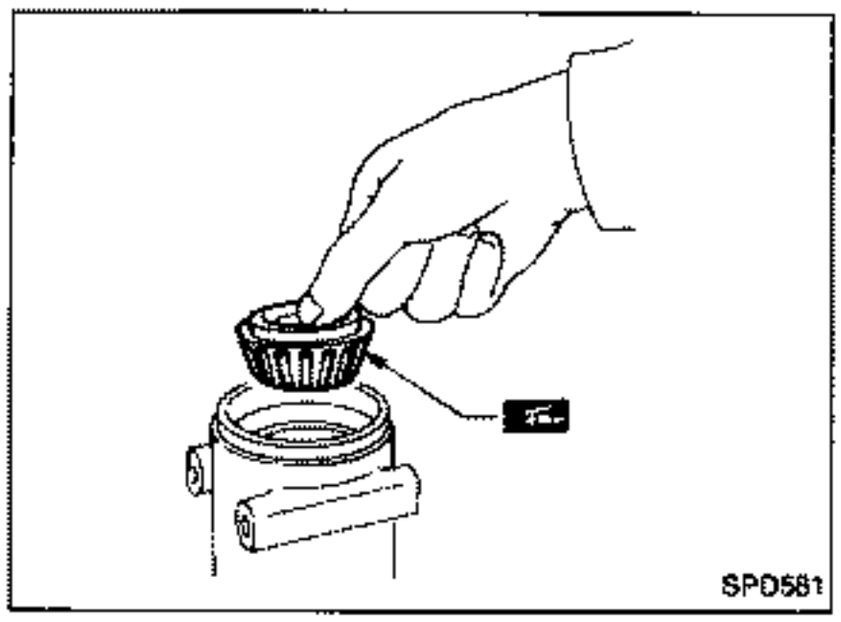

4. Place pinion front bearing inner cone in final drive housing.

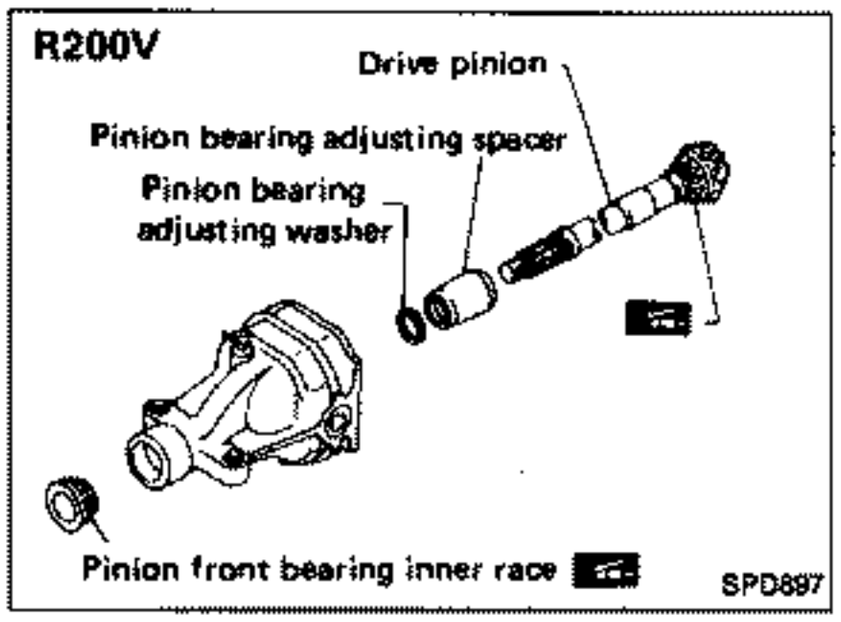

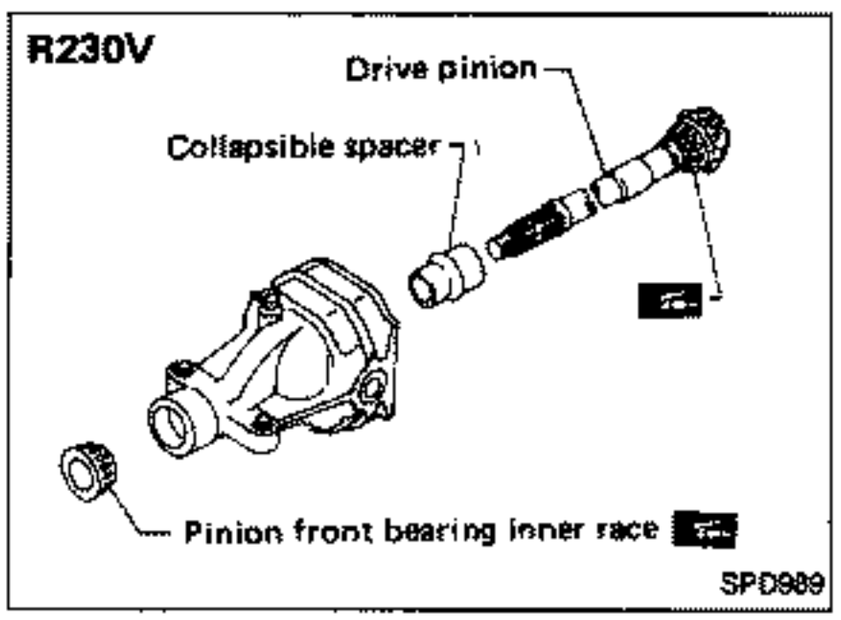

5. Set drive pinion assembly (as shown in figures at left) in differential carrier and install drive pinion, with press and a suitable tool.

Stop when drive pinion touches bearing.
Apply multi-purpose grease to pinion rear bearing inner race, pinion front bearing inner race and front pilot bearing.

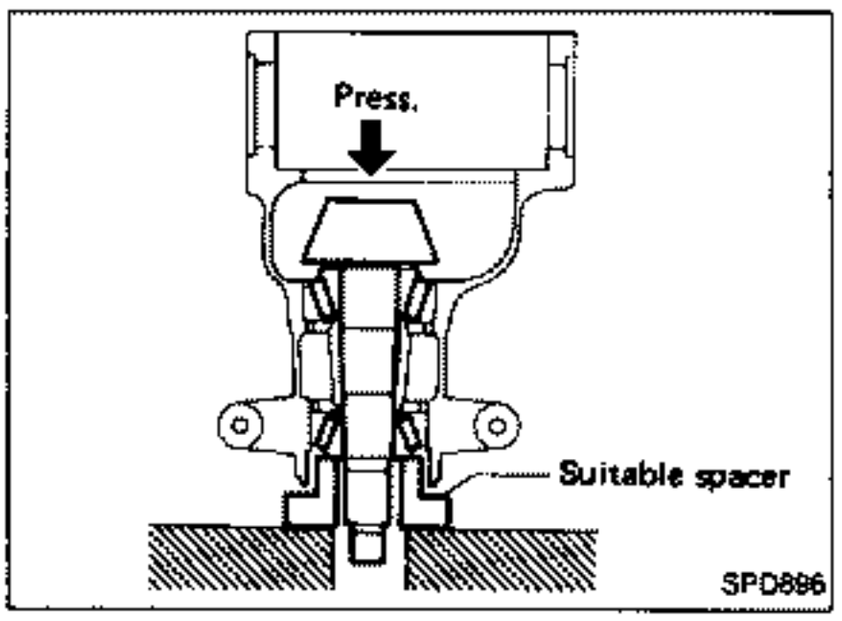

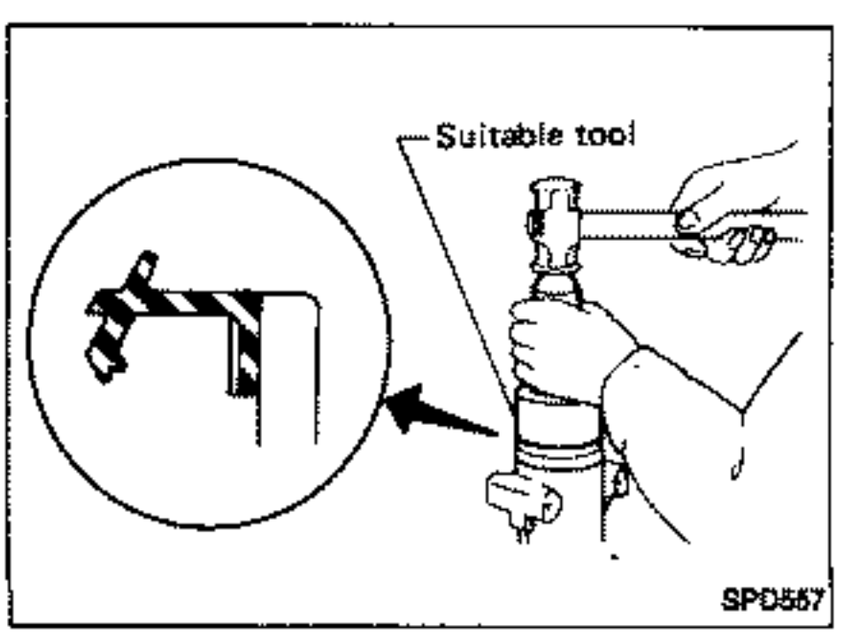

6. Apply multi-purpose grease to cavity at sealing lips of oil seal. Install front oil seal with a suitable tool.

Z.ONE.DATSUN

Differential Carrier (Cont'd)

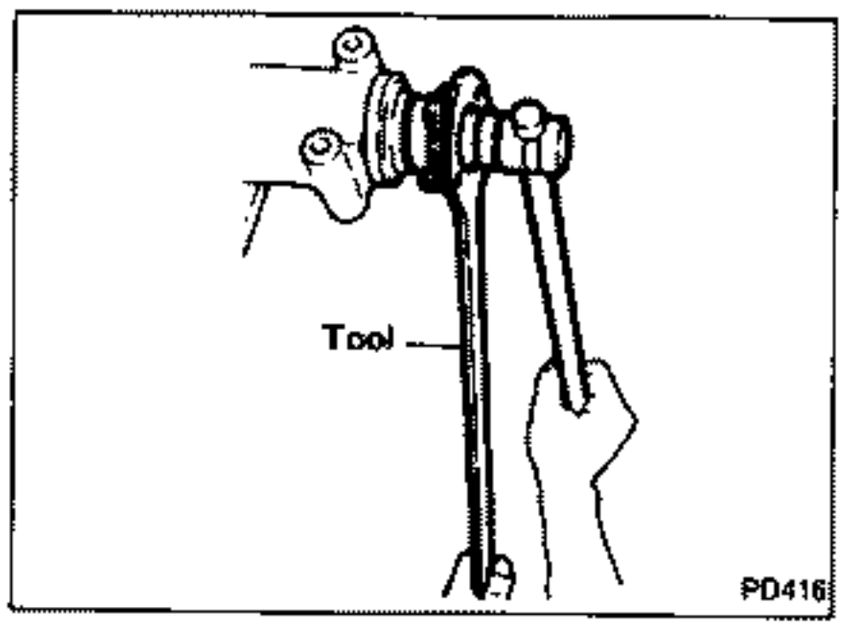

7. Install companion flange.

— R200V —

Tighten pinion nut to specified torque with Tool.

— R230V —

Tighten pinion nut to 127 N·m (13 kg-m, 94 ft-lb).

Make sure that threaded portion of drive pinion and pinion nut are free from oil or grease.

Tool number:

ST38060002 — R200V —

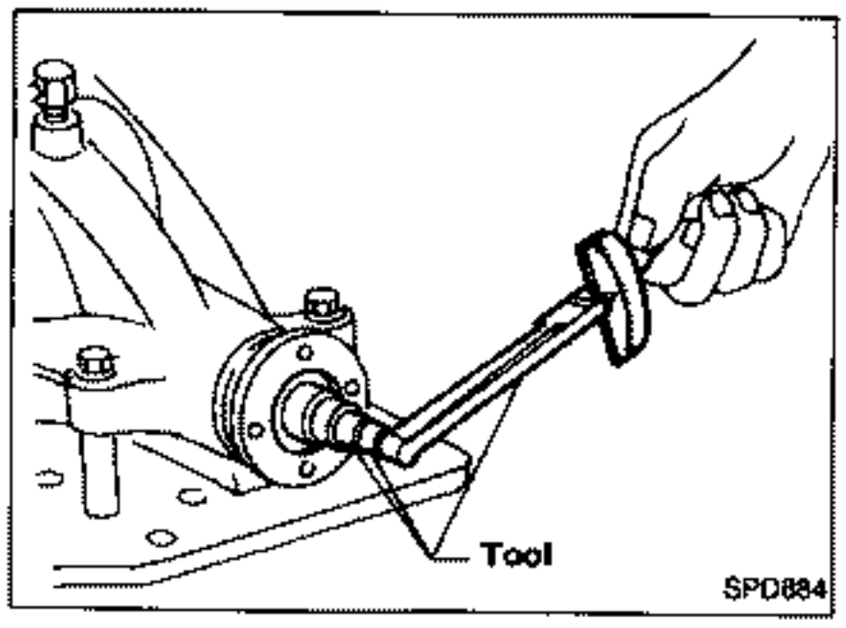

8.

— R200V —

Turn drive pinion in both directions several times, and measure pinion bearing preload.

Pinion bearing preload:

1.1 - 1.4 N·m

(11 - 14 kg-cm, 9.5 - 12.2 in-lb)

When pinion bearing preload is outside the specifications, replace pinion bearing adjusting washer and spacer with a different thickness.

— R230V —

Tighten the pinion nut by very small degrees until the specified preload is achieved. When checking the preload, turn the drive pinion in both directions several times to set the bearing rollers.

Pinion bearing preload:

1.8 - 2.6 N·m

(18 - 27 kg-cm, 16 - 23 in-lb)

This procedure will have to be repeated if:

- **Maximum preload is achieved before the minimum pinion nut torque is reached.**
- **Minimum preload is not achieved before the maximum pinion nut torque is reached.**

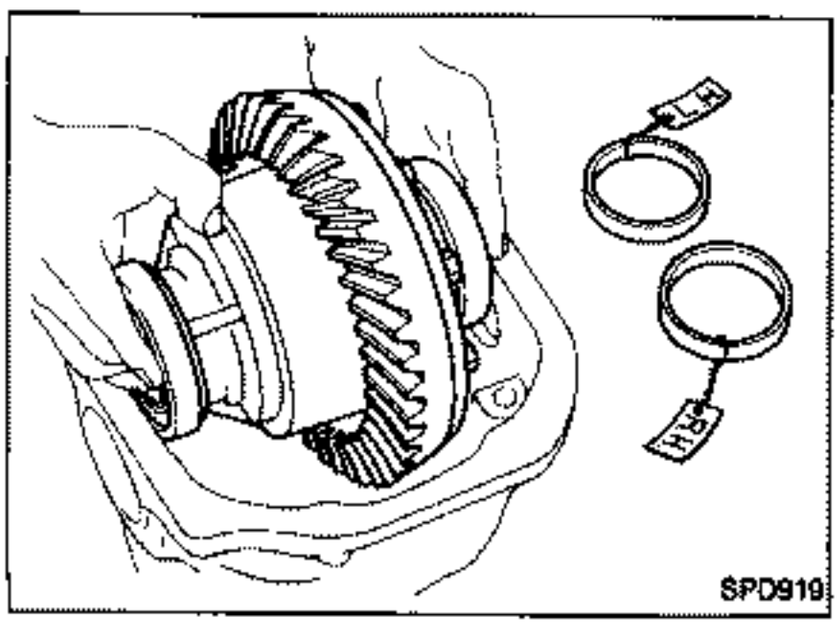

9. Install differential case assembly with side bearing outer races into gear carrier.

Differential Carrier (Cont'd)

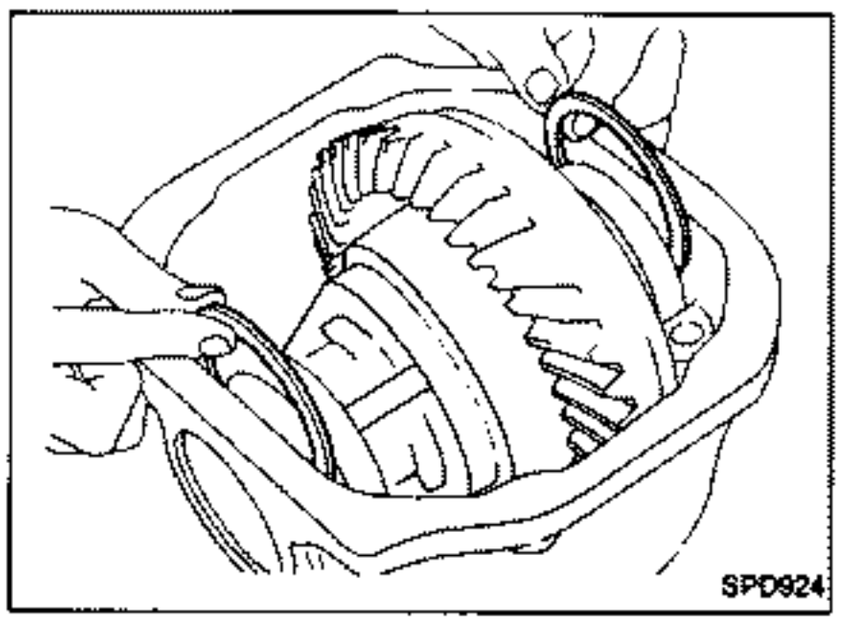

10. Insert left and right side bearing adjusting washers in place between side bearings and carrier.

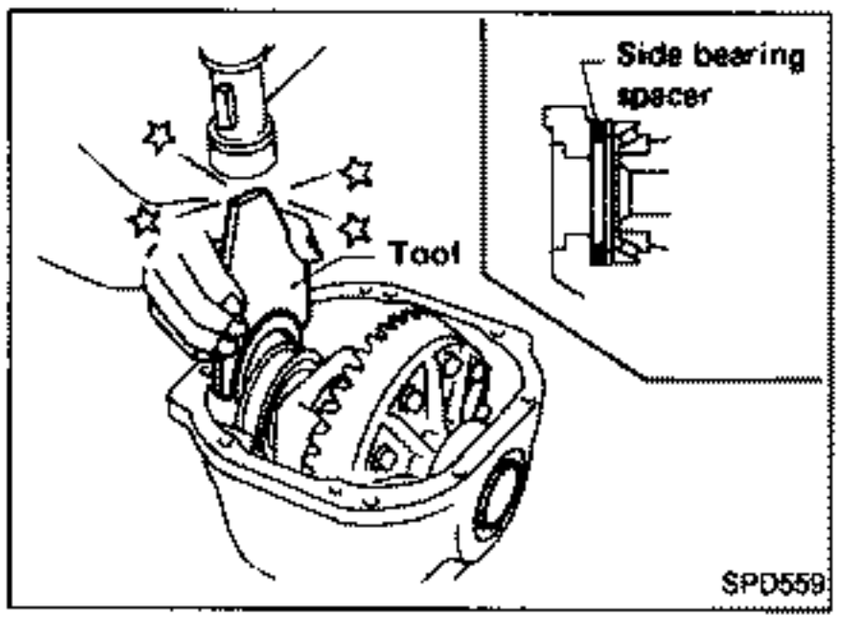

11. Drive in side bearing spacer with Tool.
    Tool number:
    KV38100600

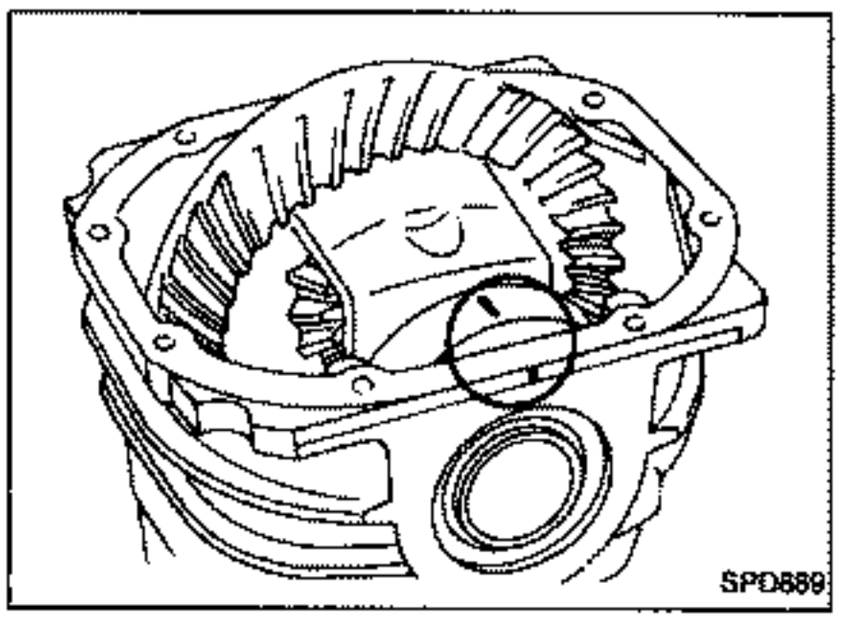

12. Align mark on bearing cap with that on gear carrier and install bearing cap on gear carrier.

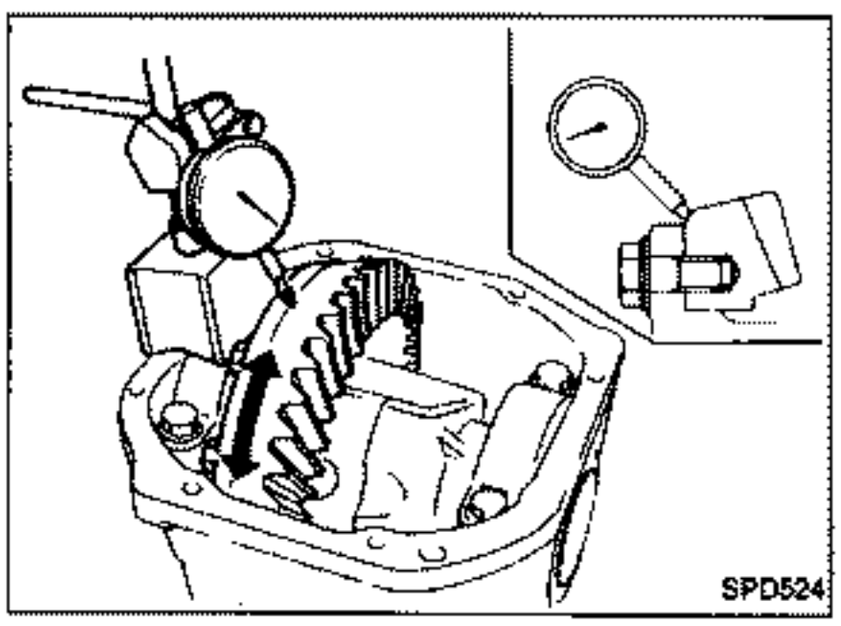

13. Check runout of ring gear with a dial indicator.
    Runout limit:
    0.05 mm (0.0020 in)

- If backlash varies excessively in different places, foreign matter may be caught between the ring gear and the differential case.

Differential Carrier (Cont'd)

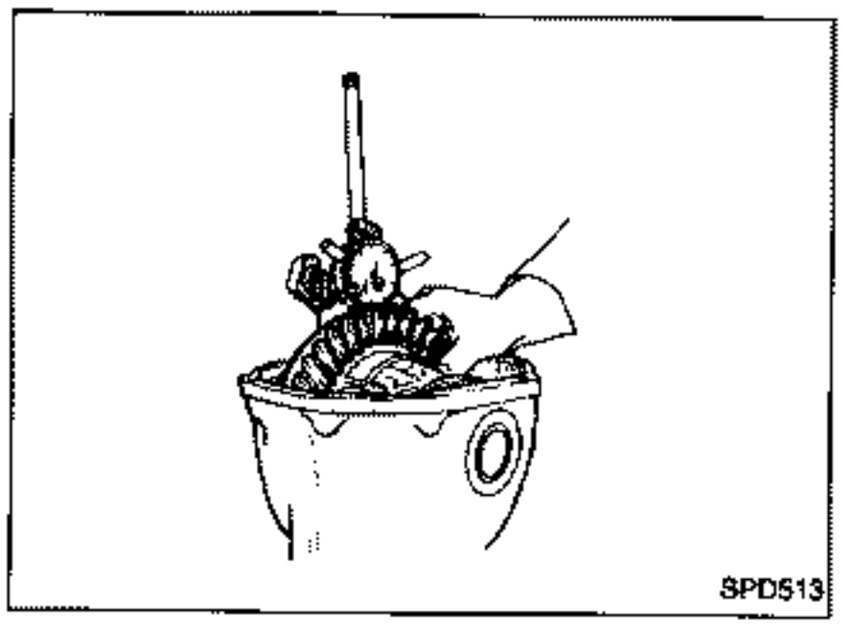
SPD513

14. Measure ring gear-to-drive pinion backlash with a dial indicator.
    Ring gear-to-drive pinion backlash:
    0.10 - 0.15 mm (0.0039 - 0.0059 in)
- If backlash is too small, decrease thickness of left washer and increase thickness of right washer by the same amount.
  If backlash is too great, reverse the above procedure.

Never change the total amount of washer thickness as this will change the bearing preload.

- If the backlash varies greatly when the ring gear runout is within the specified range, replace the hypoid gear set or differential case.

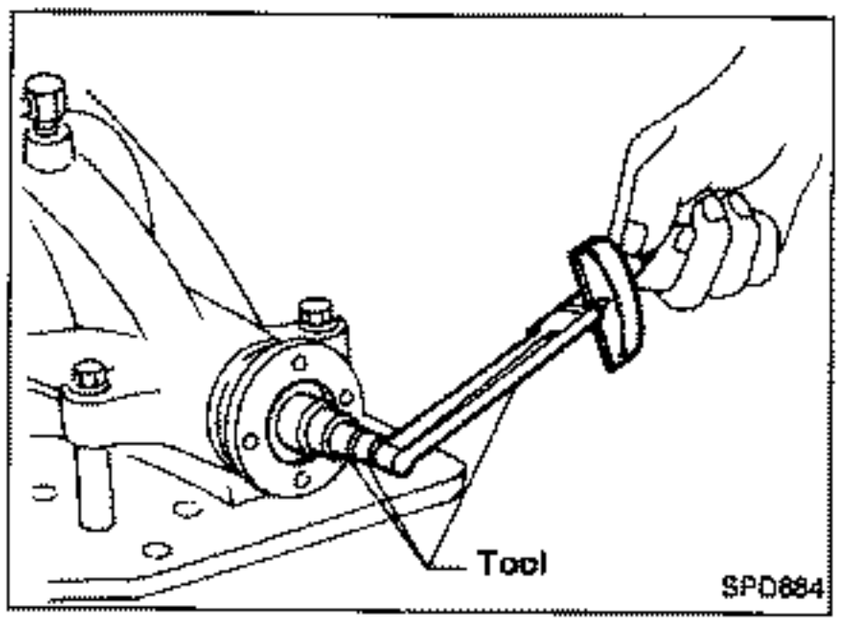

SPD884

15. Check total preload with Tool.

When checking preload, turn drive pinion in both directions several times to seat bearing rollers correctly.

Total preload:
Value more than 0.29 N·m (3.0 kg-cm, 2.6 in-lb) added on measured value of drive pinion preload

- If preload is too great, decrease the same amount of washer thickness from each side.
- If preload is too small, increase the same amount of washer thickness to each side.

Never increase or decrease different amounts of washer thickness for each side as this will change ring gear-to-drive pinion backlash.

16. Recheck ring gear-to-drive pinion backlash because increase or decrease in thickness of washer will cause change of ring gear-to-pinion backlash.
17. Check tooth contact.
    Refer to ADJUSTMENT.
18. Install rear cover.

Description

M/T MODEL

- The differential and transmission oil pumps automatically repeat ON-OFF operation according to the differential gear oil temperature.
  OFF → ON 130°C (266°F)
  ON → OFF 120°C (248°F)
  However, the pumps will not operate when the vehicle speed is less than 120 km/h (75 MPH).
- When the oil temperature becomes excessively high, the warning lamp in the combination meter will illuminate and both oil pumps will activate regardless of vehicle speed.
  Differential gear oil:
  OFF → ON 180°C (356°F)
  ON → OFF 150°C (302°F)
  Transmission gear oil:
  OFF → ON 180°C (356°F)
  ON → OFF 150°C (302°F)

A/T MODEL

- The differential oil pump automatically repeats ON-OFF operation according to the temperature of the differential gear oil.
  OFF → ON 130°C (266°F)
  ON → OFF 120°C (248°F)
  However, the pump will not operate when the vehicle speed is less than 10 km/h (6 MPH).
- When the oil temperature becomes excessively high, the warning lamp in the combination meter will illuminate and the oil pump will activate regardless of vehicle speed.
  OFF → ON 180°C (356°F)
  ON → OFF 150°C (302°F)

Removal and Installation

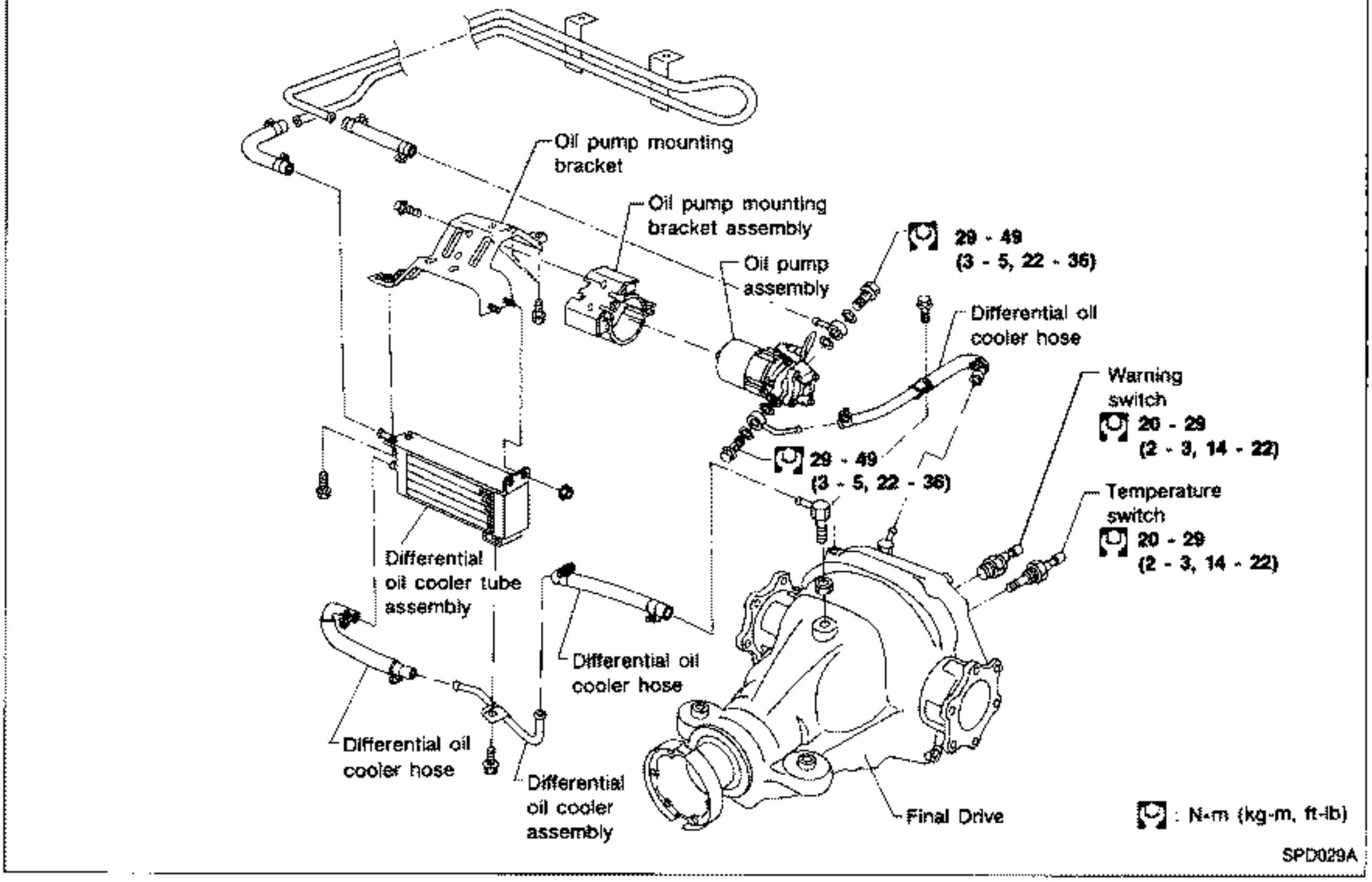

Removal and Installation (Cont'd)

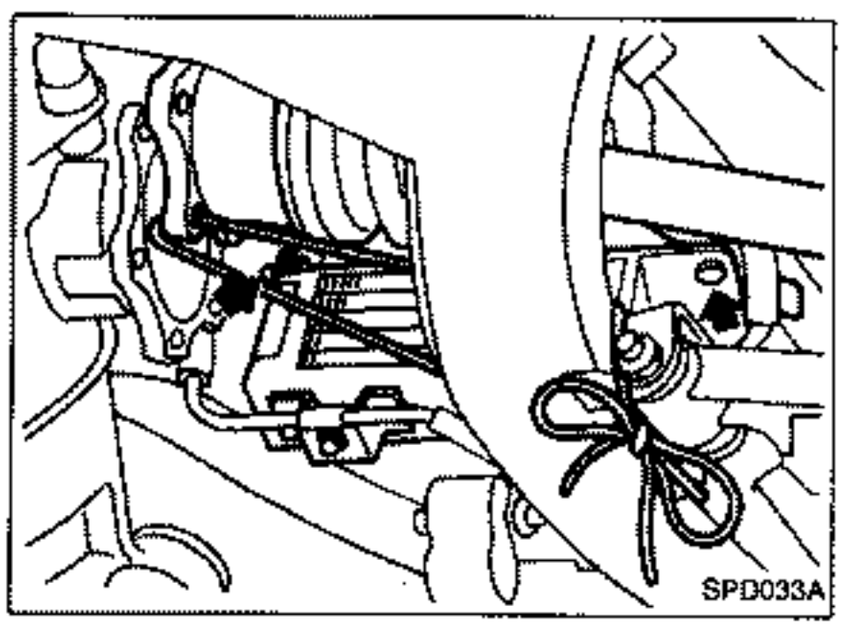

REMOVAL

The oil cooler assembly and the oil pump can be removed together or separately without removing the final drive.

1. Remove right side rear exhaust tube.
2. Disconnect right side drive shaft from final drive.

Be careful not to damage drive shaft boot.

3. Disconnect oil cooler hoses which connect to final drive.

When disconnecting hoses, put a tray underneath to catch oil.

4. Remove securing nuts and bolts from oil cooler assembly.

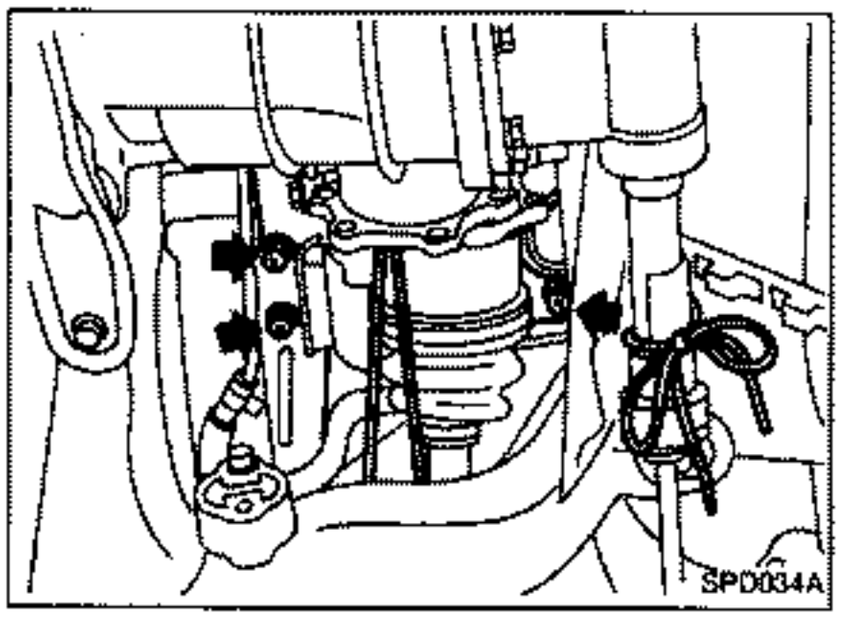

5. Remove mounting bracket securing bolts.
6. Disconnect electric connector from oil pump.
7. Remove oil cooler assembly with oil pump.

INSTALLATION

Oil level and oil leak from hoses must be checked after the oil cooler has been operated.

Circuit Diagram

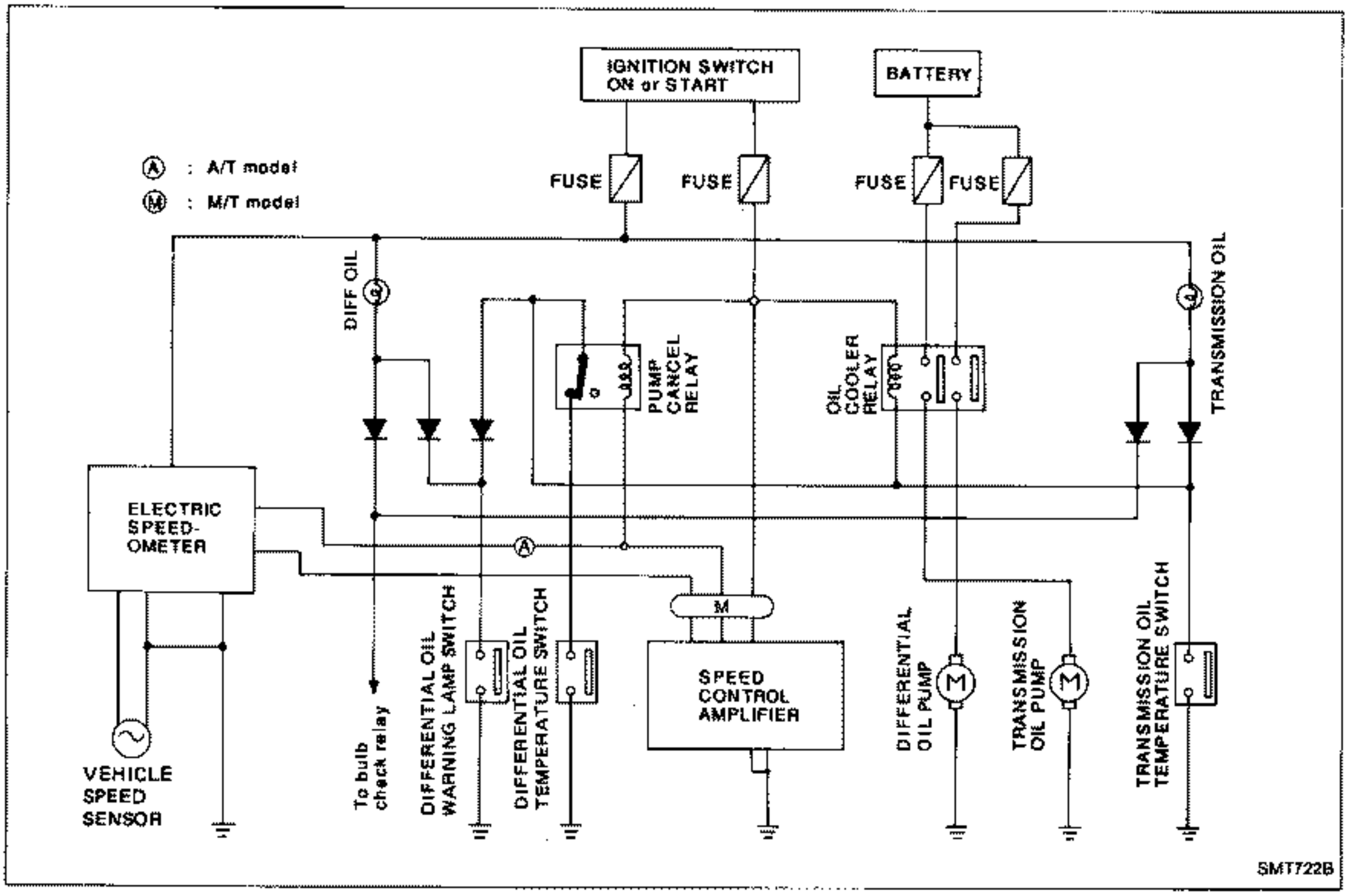

Wiring Diagram

L.H.D. MODEL

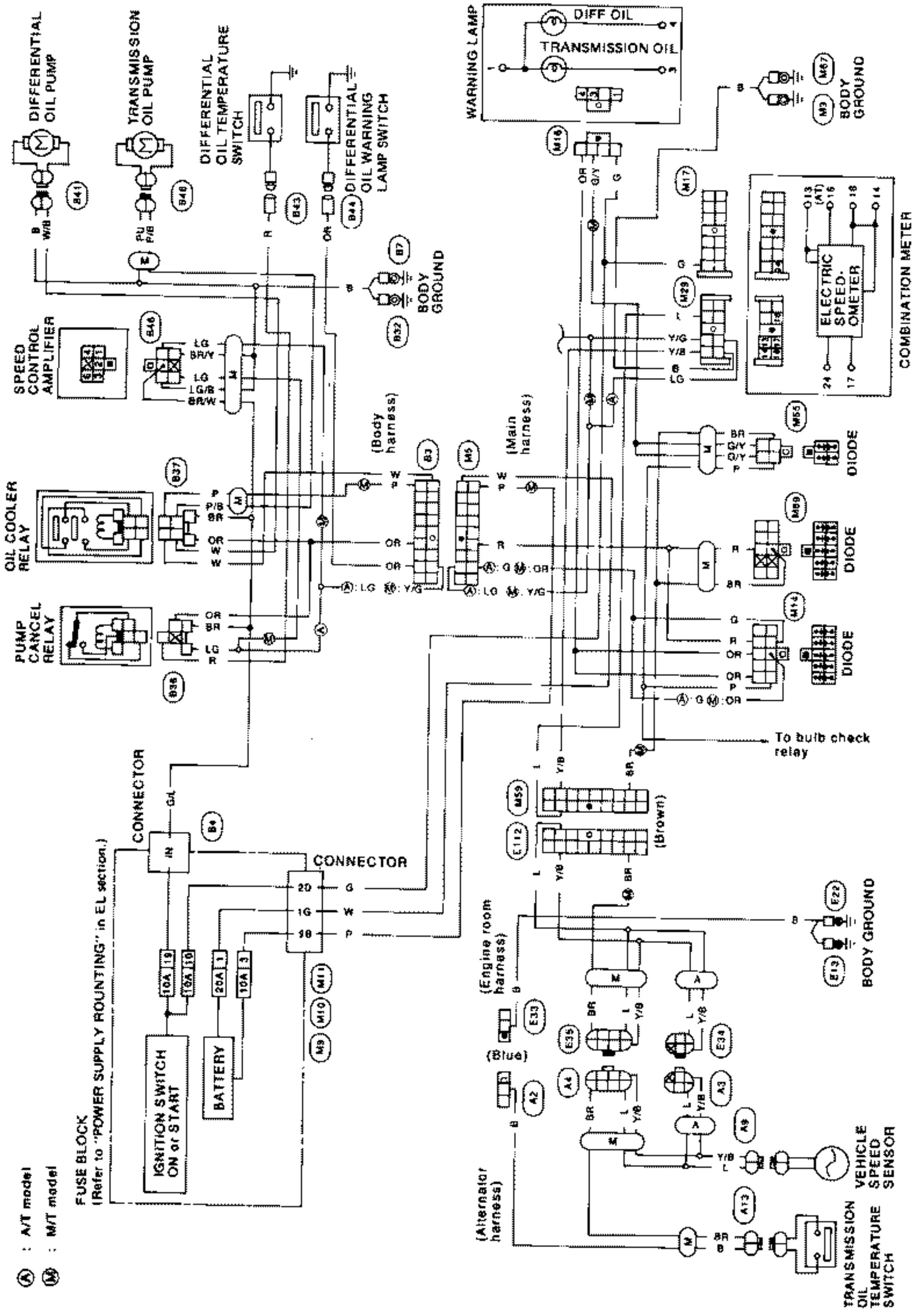

SMT723B

Wiring Diagram (Cont'd)

R.H.D. MODEL

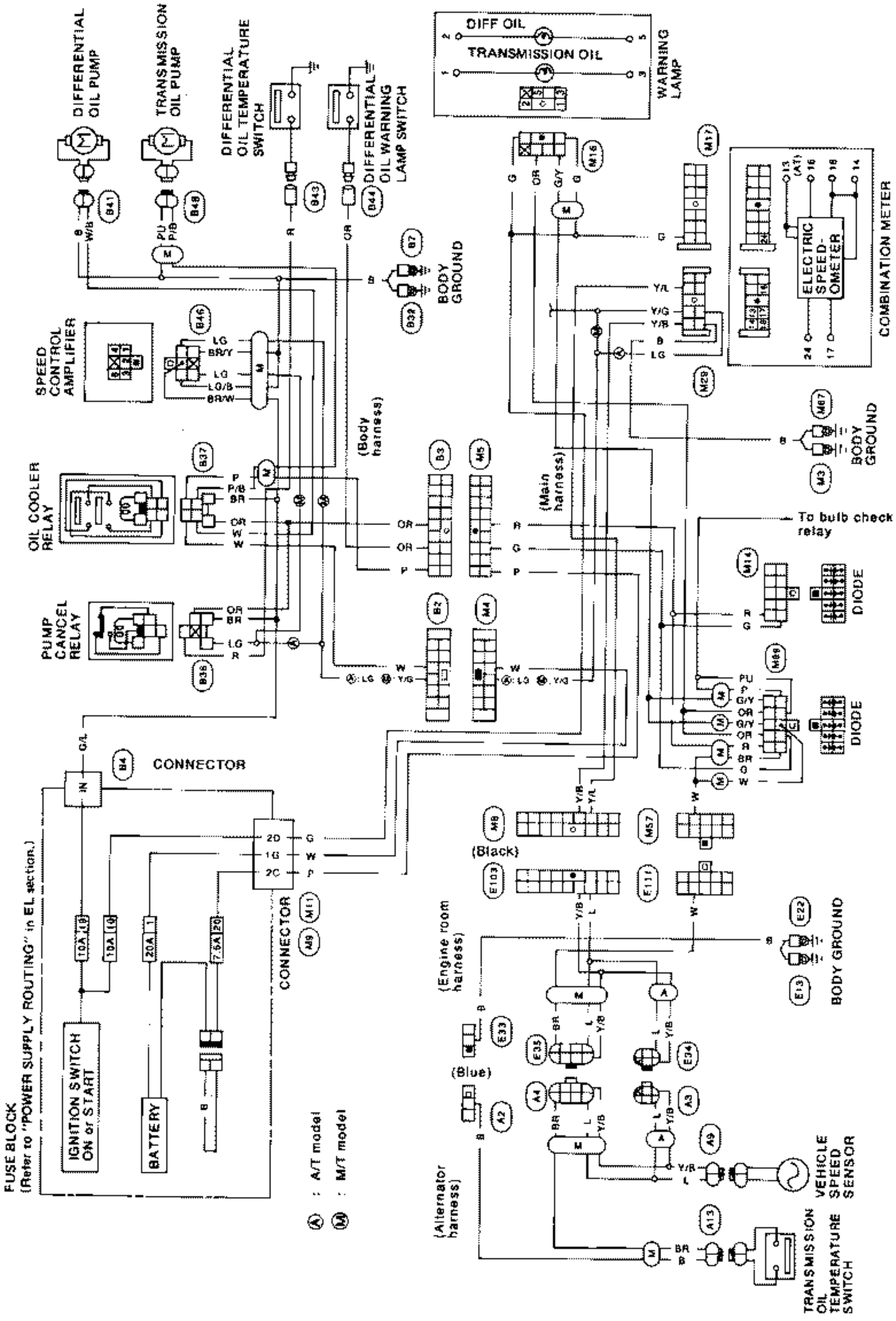

SMT724B

Inspection

Thoroughly clean all parts in cleaning solvent and blow dry with compressed air, if available.

OIL PUMP ASSEMBLY

Replace oil pump assembly when motor does not rotate because of motor seizure or other damage.

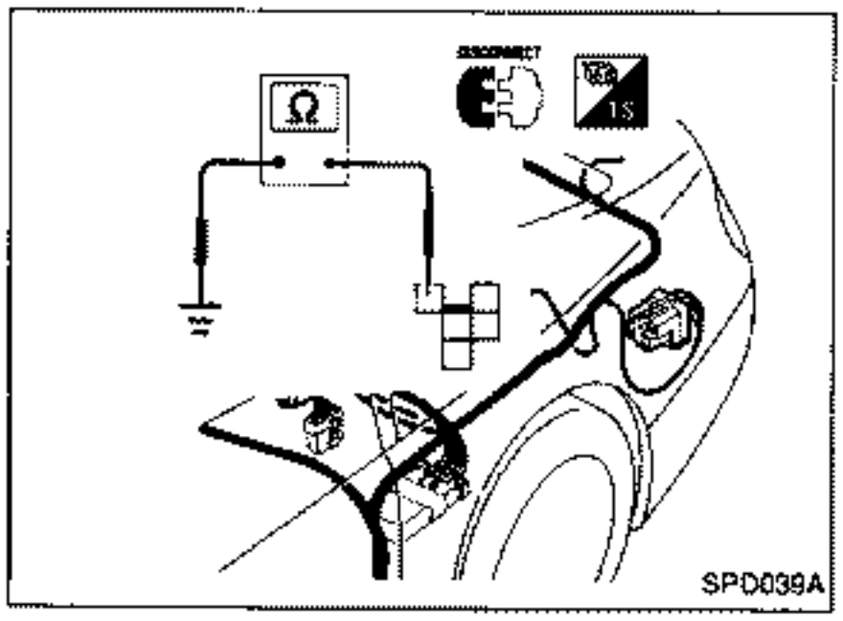

SPEEDOMETER AMPLIFIER

Check speedometer amplifier operation as follows:

1. Disconnect differential oil pump cancel relay from connector and connect circuit tester to connector for the relay as shown.
2. Raise rear wheels.
3. Drive vehicle slowly and check the voltage.

M/T model:

Less than 120 km/h (75 MPH) ... Continuity exists.
More than 120 km/h (75 MPH) ... Continuity does not exist.

A/T model:

Less than 10 km/h (6 MPH) ... Continuity exists
More than 10 km/h (6 MPH) ... Continuity does not exist.

OIL COOLER ASSEMBLY, OIL TUBE ASSEMBLY, OIL HOSE

If oil leakage is detected during removal, replace oil cooler assembly or oil tube.

Propeller Shaft

GENERAL SPECIFICATIONS

Engine		VG30DE		VG30DETT	
Transmission		M/T	A/T	M/T	A/T
Propeller shaft model		3S71A		3S80A-VL107	
Number of joints		3			
Coupling method with transmission		Sleeve type			
Types of journal bearings		Shell type (non-disassembly type)		Shell type (non-disassembly type) x 2, CVJ* x 1	
Distance between yokes	mm (in)	71.0 (2.795)		90.0 (3.150)	
Shaft length (Spider to spider)	mm (in)				
1st		606 (23.86)	510 (20.08)	606 (23.86)	489 (19.25)
2nd		539 (21.22)		508 (20.00)	
Shaft outer diameter	mm (in)				
1st		75 (2.95)		82.6 (3.252)	
2nd		75 (2.95)		82.6 (3.252)	

*: Constant velocity joint

INSPECTION AND ADJUSTMENT

Unit: mm (in)

Propeller shaft model	3S71A	3S80A-VL107
Journal axial play	0 (0)	
Propeller shaft runout limit	0.6 (0.024)	

Final Drive

GENERAL SPECIFICATIONS

Final drive model	R200V	R230V
Ring gear pitch diameter mm (in)	205 (8.07)	230 (9.06)
Gear ratio	4.083	3.692
Number of teeth (Ring gear/Drive pinion)	49/12	48/13
Oil capacity (approx.) ℓ (Imp pt)	1.5 (2-5/8)	2.1 (3-3/4)
Side bearing spacer location	Left	Right

INSPECTION AND ADJUSTMENT (R200V)

Ring gear runout

Ring gear runout limit mm (in)	0.05 (0.0020)

Side gear adjustment

Side gear backlash (Clearance between side gear and differential case) mm (in)	0.03 - 0.09 (0.0012 - 0.0035)

Available side gear thrust washers

Thickness mm (in)	Part number
0.80 (0.0315)	38424-40F60
0.83 (0.0327)	38424-40F61
0.86 (0.0339)	38424-40F62
0.89 (0.0350)	38424-40F63
0.92 (0.0362)	38424-40F64
0.95 (0.0374)	38424-40F65
0.98 (0.0386)	38424-40F66
1.01 (0.0398)	38424-40F67
1.04 (0.0409)	38424-40F68
1.07 (0.0421)	38424-40F69
1.10 (0.0433)	38424-40F70
1.13 (0.0445)	38424-40F71
1.16 (0.0457)	38424-40F72
1.19 (0.0469)	38424-40F73
1.22 (0.0480)	38424-40F74
1.25 (0.0492)	38424-40F75
1.28 (0.0504)	38424-40F76
1.31 (0.0516)	38424-40F77
1.34 (0.0528)	38424-40F78
1.37 (0.0539)	38424-40F79
1.40 (0.0551)	38424-40F80
1.43 (0.0563)	38424-40F81
1.46 (0.0575)	38424-40F82
1.49 (0.0587)	38424-40F83

Drive pinion height adjustment

Available pinion height adjusting washers

Thickness mm (in)	Part number
3.09 (0.1217)	38154-P6017
3.12 (0.1228)	38154-P6018
3.15 (0.1240)	38154-P6019
3.18 (0.1252)	38154-P6020
3.21 (0.1264)	38154-P6021
3.24 (0.1276)	38154-P6022
3.27 (0.1287)	38154-P6023
3.30 (0.1299)	38154-P6024
3.33 (0.1311)	38154-P6025
3.36 (0.1323)	38154-P6026
3.39 (0.1335)	38154-P6027
3.42 (0.1346)	38154-P6028
3.45 (0.1358)	38154-P6029
3.48 (0.1370)	38154-P6030
3.51 (0.1382)	38154-P6031
3.54 (0.1394)	38154-P6032
3.57 (0.1406)	38154-P6033
3.60 (0.1417)	38154-P6034
3.63 (0.1429)	38154-P6035
3.66 (0.1441)	38154-P6036

Drive pinion preload adjustment

Drive pinion preload with front oil seal N·m (kg-cm, in-lb)	1.1 - 1.4 (11 - 14, 9.5 - 12.2)

Available drive pinion bearing preload adjusting washers

Thickness mm (in)	Part number
3.80 - 3.82 (0.1496 - 0.1504)	38125-61001
3.82 - 3.84 (0.1504 - 0.1512)	38126-61001
3.84 - 3.86 (0.1512 - 0.1520)	38127-61001
3.86 - 3.88 (0.1520 - 0.1528)	38128-61001
3.88 - 3.90 (0.1528 - 0.1535)	38129-61001
3.90 - 3.92 (0.1535 - 0.1543)	38130-61001
3.92 - 3.94 (0.1543 - 0.1551)	38131-61001
3.94 - 3.96 (0.1551 - 0.1559)	38132-61001
3.96 - 3.98 (0.1559 - 0.1567)	38133-61001
3.98 - 4.00 (0.1567 - 0.1575)	38134-61001
4.00 - 4.02 (0.1575 - 0.1583)	38135-61001
4.02 - 4.04 (0.1583 - 0.1591)	38136-61001
4.04 - 4.06 (0.1591 - 0.1598)	38137-61001
4.06 - 4.08 (0.1598 - 0.1606)	38138-61001
4.08 - 4.10 (0.1606 - 0.1614)	38139-61001

Available drive pinion bearing preload adjusting spacers

Length mm (in)	Part number
45.60 (1.7953)	38165-10V05
45.90 (1.8071)	38165-10V06
46.20 (1.8189)	38165-10V07
46.50 (1.8307)	38165-10V00
46.80 (1.8425)	38165-10V01

Final Drive (Cont'd)

Side bearing adjustment

Available side bearing adjusting washers

Thickness mm (in)	Part number
2.00 (0.0787)	38453-N3100
2.05 (0.0807)	38453-N3101
2.10 (0.0827)	38453-N3102
2.15 (0.0846)	38453-N3103
2.20 (0.0866)	38453-N3104
2.25 (0.0886)	38453-N3105
2.30 (0.0906)	38453-N3106
2.35 (0.0925)	38453-N3107
2.40 (0.0945)	38453-N3108
2.45 (0.0965)	38453-N3109
2.50 (0.0984)	38453-N3110
2.55 (0.1004)	38453-N3111
2.60 (0.1024)	38453-N3112

Total preload

Total preload	Value of more than 0.29 N·m (3.0 kg-cm, 2.6 in-lb) added on to measured value of drive pinion preload
Ring gear backlash mm (in)	0.10 - 0.15 (0.0039 - 0.0059)

INSPECTION AND ADJUSTMENT (R230V)

Ring gear runout

Ring gear runout limit mm (in)	0.05 (0.0020)

Side gear adjustment

Side gear backlash (Clearance between side gear and differential case) mm (in)	0.03 - 0.09 (0.0012 - 0.0035)

Available side gear thrust washers

Thickness mm (in)	Part number
1.10 (0.0433)	38424-40P71
1.15 (0.0453)	38424-40P72
1.20 (0.0472)	38424-40P73
1.25 (0.0492)	38424-40P74
1.30 (0.0512)	38424-40P75
1.35 (0.0531)	38424-40P76
1.40 (0.0551)	38424-40P77
1.45 (0.0571)	38424-40P78
1.50 (0.0591)	38424-40P79

Drive pinion height adjustment

Available pinion height adjusting washers

Thickness mm (in)	Part number
2.59 (0.1020)	38154-40P00
2.61 (0.1028)	38154-40P01
2.63 (0.1035)	38154-40P02
2.65 (0.1043)	38154-40P03
2.67 (0.1051)	38154-40P04
2.69 (0.1059)	38154-40P05
2.71 (0.1067)	38154-40P06
2.73 (0.1075)	38154-40P07
2.75 (0.1083)	38154-40P08
2.77 (0.1091)	38154-40P09
2.79 (0.1098)	38154-40P10
2.81 (0.1106)	38154-40P11
2.83 (0.1114)	38154-40P12
2.85 (0.1122)	38154-40P13
2.87 (0.1130)	38154-40P14
2.89 (0.1138)	38154-40P15
2.91 (0.1146)	38154-40P16
2.93 (0.1154)	38154-40P17
2.95 (0.1161)	38154-40P18
2.97 (0.1169)	38154-40P19

Drive pinion preload adjustment

Drive pinion preload with front oil seal N·m (kg-cm, in-lb)	1.8 - 2.6 (18 - 27, 16 - 23)

Side bearing adjustment

Available side bearing adjusting washers

Thickness mm (in)	Part number
2.00 (0.0787)	38453-40P00
2.05 (0.0807)	38453-40P01
2.10 (0.0827)	38453-40P02
2.15 (0.0846)	38453-40P03
2.20 (0.0866)	38453-40P04
2.25 (0.0886)	38453-40P05
2.30 (0.0906)	38453-40P06
2.35 (0.0925)	38453-40P07
2.40 (0.0945)	38453-40P08
2.45 (0.0965)	38453-40P09
2.50 (0.0984)	38453-40P10
2.55 (0.1004)	38453-40P11
2.60 (0.1024)	38453-40P12

Total preload

Total preload	Value of more than 0.29 N·m (3.0 kg-cm, 2.6 in-lb) added on to measured value of drive pinion preload
Ring gear backlash mm (in)	0.13 - 0.18 (0.0051 - 0.0071)

FRONT AXLE & FRONT SUSPENSION

SECTION FA

CONTENTS

PRECAUTIONS AND PREPARATION ..... FA- 2
FRONT AXLE AND FRONT SUSPENSION ..... FA- 5
CHECK AND ADJUSTMENT — On-vehicle ..... FA- 6
FRONT AXLE FA-11
FRONT AXLE — Wheel Hub and Steering Knuckle FA-12
FRONT SUSPENSION FA-16
FRONT SUSPENSION — Coil Spring and Shock Absorber FA-17
FRONT SUSPENSION — Third Link and Upper Link FA-19
FRONT SUSPENSION — Transverse Link and Lower Ball Joint FA-22
FRONT SUSPENSION — Tension Rod and Stabilizer Bar FA-23
SERVICE DATA AND SPECIFICATIONS (S.D.S.) FA-24

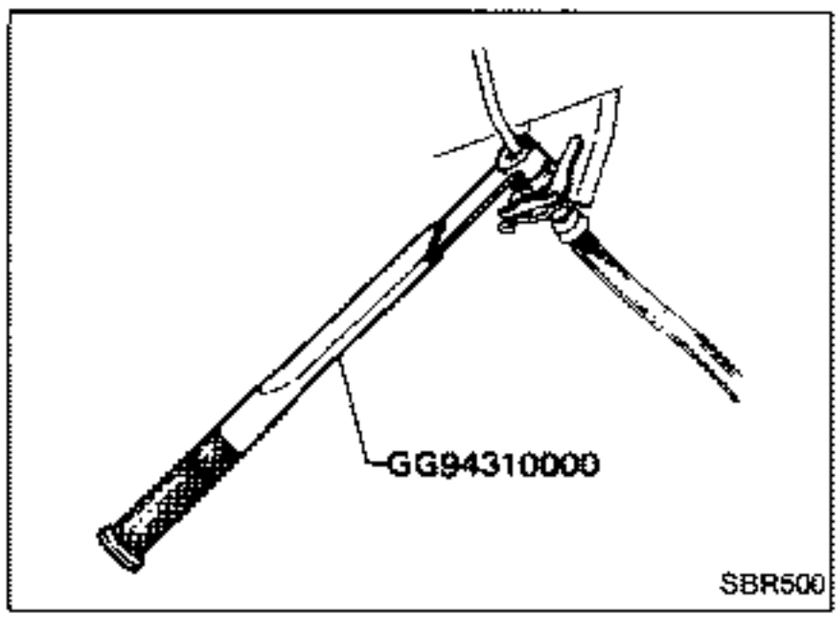

Precautions

- When installing each rubber part, final tightening must be carried out under unladen condition* with tires on ground.
  * Fuel, radiator coolant and engine oil full. Spare tire, jack, hand tools and mats in designated positions.
- When removing each suspension part, check wheel alignment and adjust if necessary.
- Use Tool when removing or installing brake lines.

Preparation

SPECIAL SERVICE TOOLS

Tool number Tool name	Description	
HT72750000 Ball joint remover	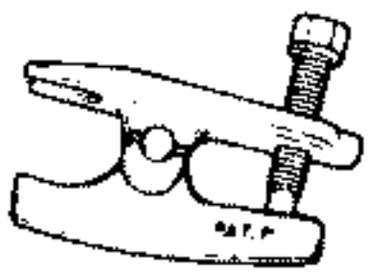	Removing tie-rod outer end and lower ball joint
HT71780000 Spring compressor	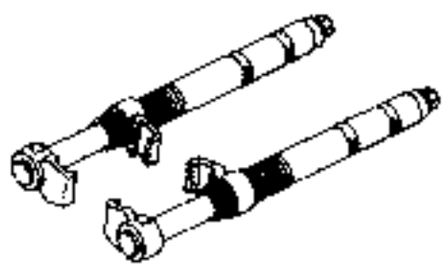	Removing and installing coil spring
ST35652000 Shock absorber attachment	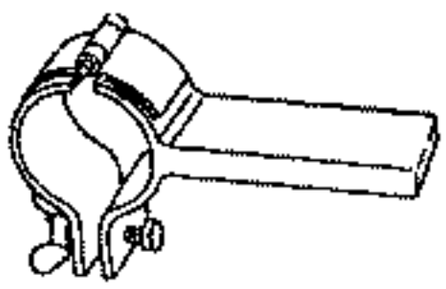	Fixing shock absorber
GG94310000 Flare nut torque wrench		Removing and installing brake piping
ST30031000 Bearing inner race puller		Removing bearing inner race

Preparation (Cont'd)

Tool number Tool name	Description
KV991040S0 C.C.K. holder KV99104010 Attachment set ① Plate ② Guide bolts ③ Nuts ④ Springs ⑤ Center plate ⑥ KV99104020 Adapter A ⑦ KV99104030 Adapter B ⑧ KV99104040 Adapter C ⑨ KV99104050 Adapter D	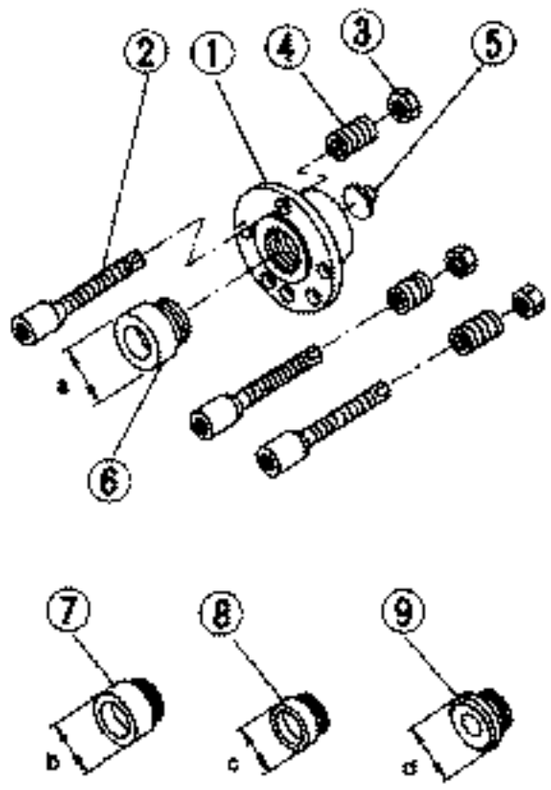 Attaching wheel alignment gauge a: 72 mm (2.83 in) dia. b: 65 mm (2.56 in) dia. c: 57 mm (2.24 in) dia. d: 53.4 mm (2.102 in) dia. SFA892A

Preparation (Cont'd)

COMMERCIAL SERVICE TOOLS

Tool name	Description	
Wheel bearing drift		Removing wheel bearing **A: 60 mm (2.36 in) dia.** **B: 37 mm (1.46 in) dia.**
Wheel bearing drift	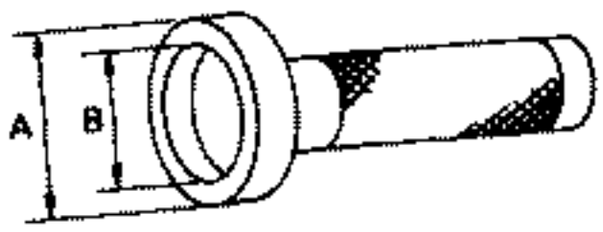	Installing wheel bearing **A: 75 mm (2.95 in) dia.** **B: 65 mm (2.56 in) dia.**
Baffle plate drift	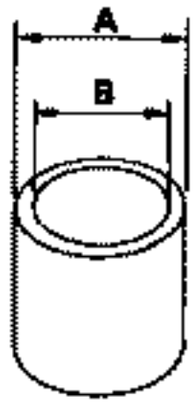	Installing baffle plate **A: 125 mm (4.92 in) dia.** **B: 106 mm (4.17 in) dia.**
Tension rod bushing drift	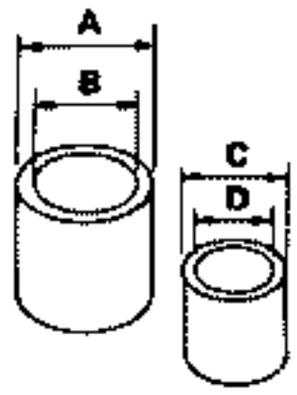	Removing and installing tension rod bushing **A: 76 mm (3.07 in) dia.** **B: 66 mm (2.60 in) dia.** **C: 62 mm (2.44 in) dia.** **D: 25 - 55 mm (0.98 - 2.17 in) dia.**
Grease seal drift	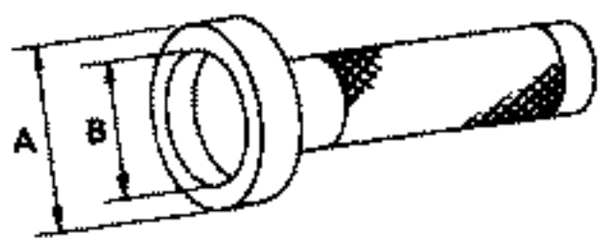	Installing wheel hub grease seal **A: 86 mm (3.39 in) dia.** **B: 76 mm (2.99 in) dia.**
Cap drift	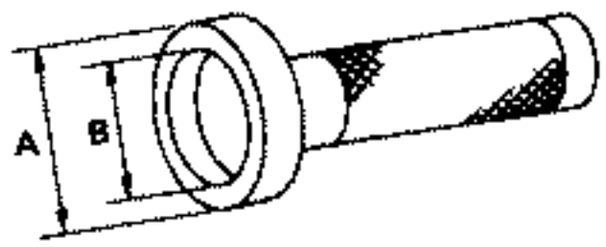	Installing king pin cap **A: 60 mm (2.36 in) dia.** **B: 52 mm (2.05 in) dia.**
Bearing drift	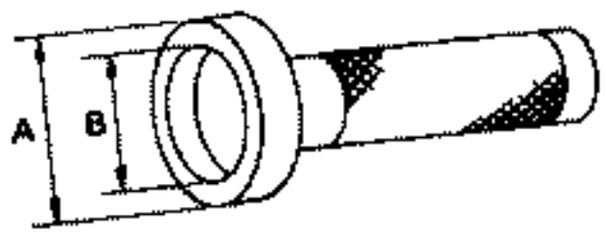	Installing king pin lower bearing **A: 57 mm (2.24 in) dia.** **B: 50 mm (1.97 in) dia.**
Bearing drift	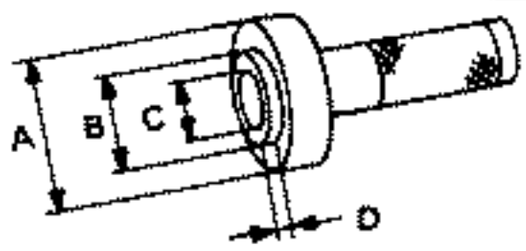	Installing king pin upper bearing **A: 57 mm (2.24 in) dia.** **B: 46 mm (1.81 in) dia.** **C: 40 mm (1.57 in) dia.** **D: 2.5 mm (0.098 in)**
Grease seal drift	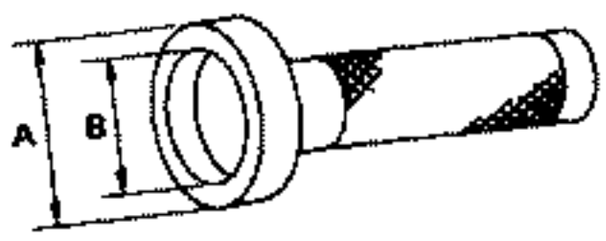	Installing king pin grease seal **A: 68 mm (2.68 in) dia.** **B: 58 mm (2.28 in) dia.**

Final tightening for rubber parts must be done under unladen condition*, with tires on ground.

* Fuel, radiator coolant and engine oil full. Spare tire, jack, hand tools and mats in designated positions.

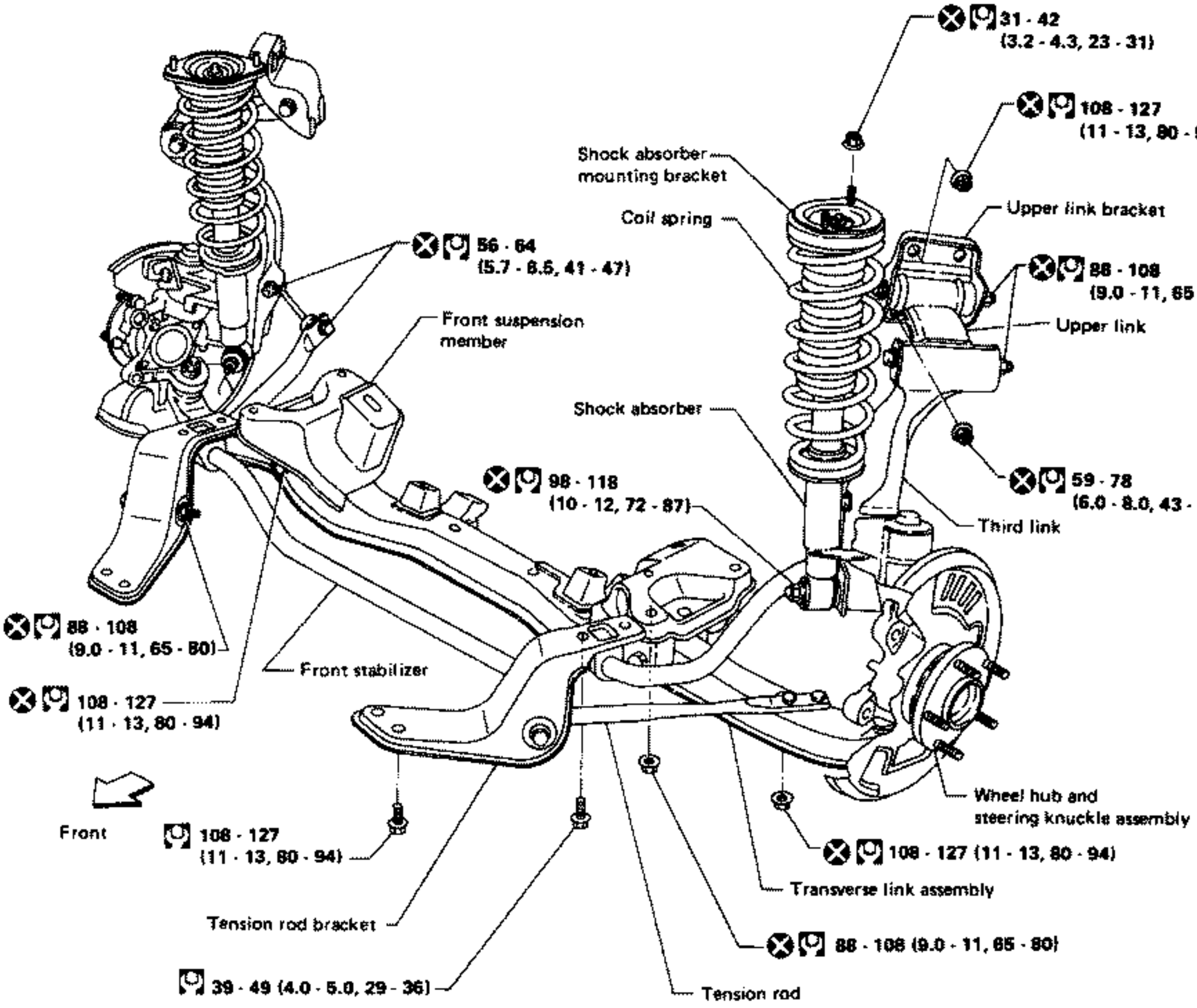

: N·m (kg-m, ft-lb)

SFA736A

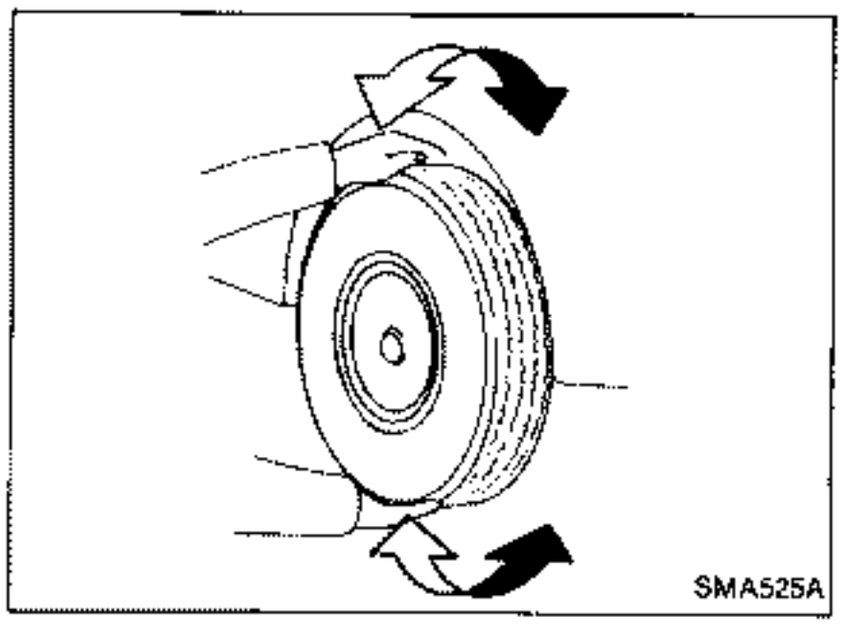
SMA525A

Front Axle and Front Suspension Parts

Check front axle and front suspension parts for looseness, cracks, wear or other damage.

- Shake each front wheel to check for excessive play.

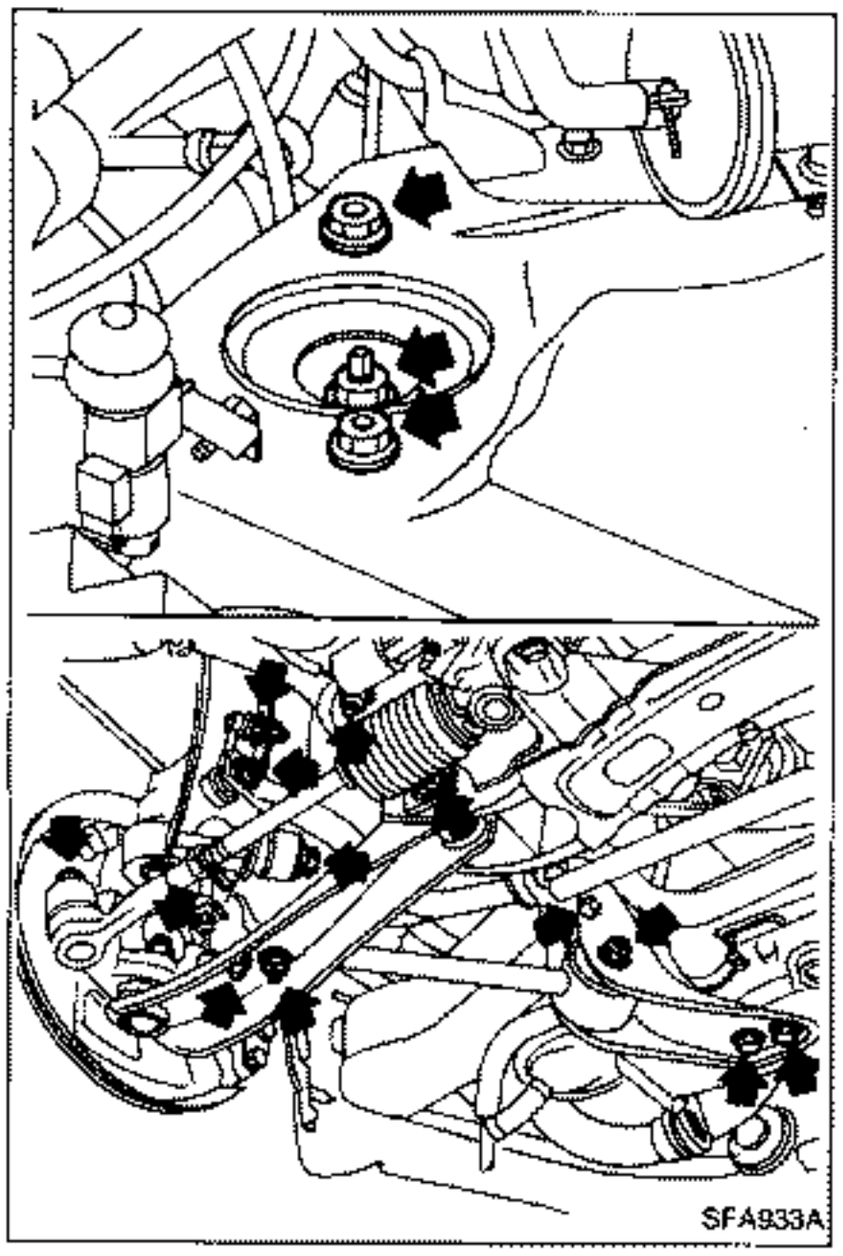
SFA933A

- Retighten all nuts and bolts to the specified torque.
  Tightening torque: Refer to FRONT SUSPENSION.
- Make sure that cotter pin is inserted.

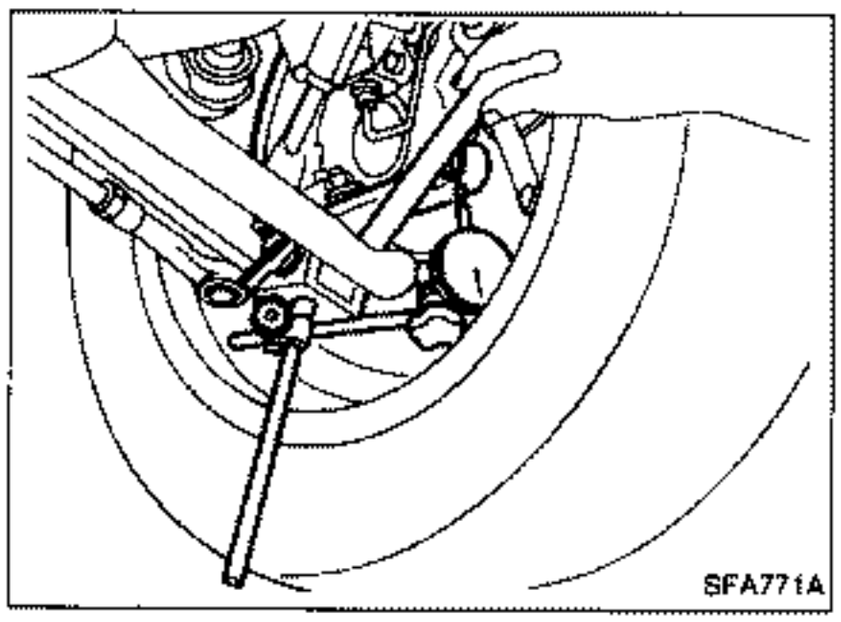
SFA771A

- Check suspension ball joint end play.

(1) Jack up front of vehicle and set the stands.
(2) Clamp dial indicator onto transverse link and place indicator tip on lower edge of brake caliper.
(3) Make sure front wheels are straight and brake pedal is depressed.
(4) Place a pry bar between transverse link and inner rim of road wheel.
(5) While pushing and releasing pry bar, observe maximum dial indicator value.
    Vertical end play: 0 mm (0 in)
(6) If not to above specification, remove and recheck ball joint.

Front Axle and Front Suspension Parts (Cont'd)

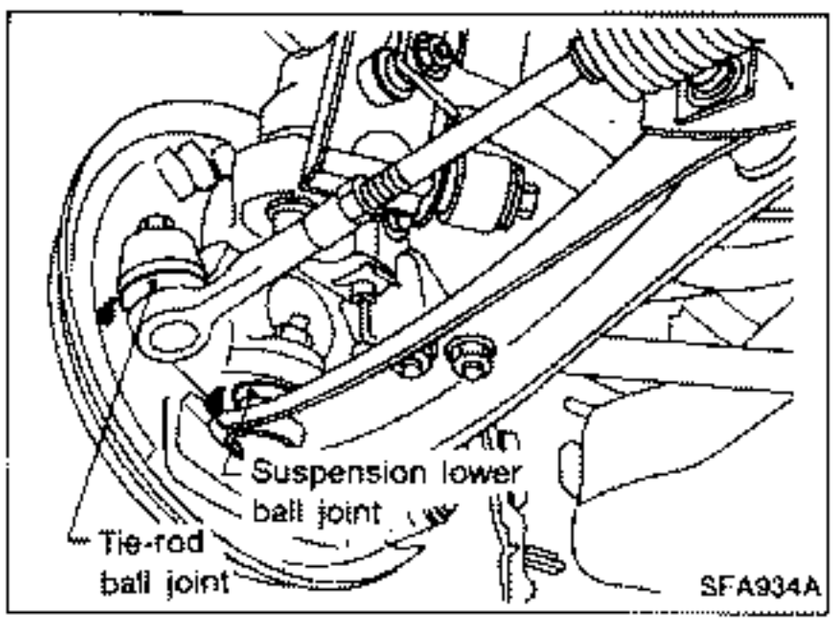

- Check suspension lower ball joint and tie-rod ball joint for grease leakage, and dust cover for cracks or other damage.

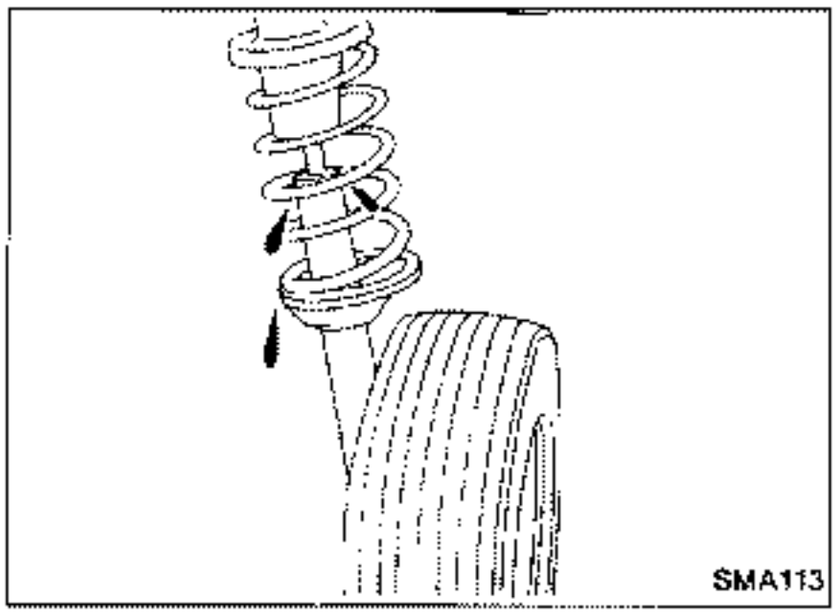

- Check shock absorber for oil leakage or other damage.

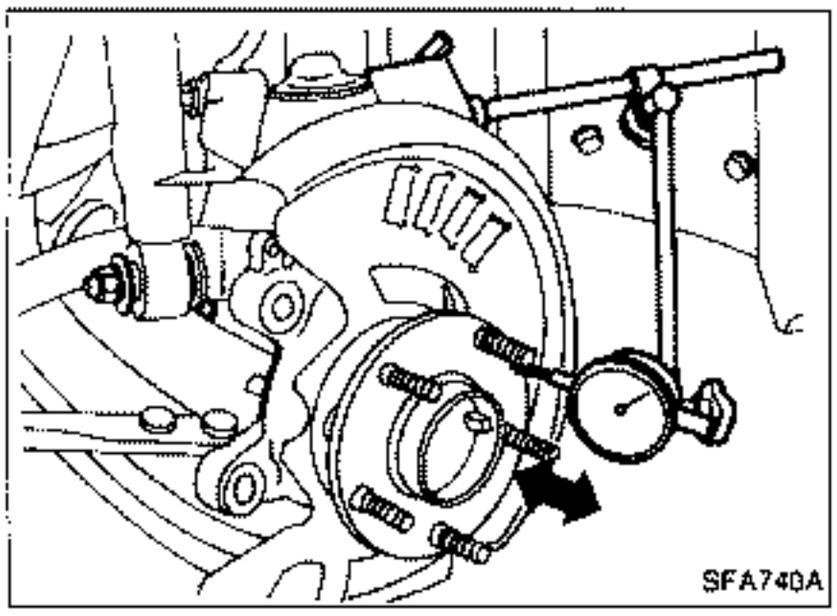

Front Wheel Bearing

- Check wheel bearings for smooth operation.
- Check axial end play.
  Axial end play: 0.05 mm (0.0020 in) or less
- If axial end play is not within specification or wheel bearing does not turn smoothly, replace wheel bearing assembly. Refer to FRONT AXLE — Wheel Hub and Knuckle.

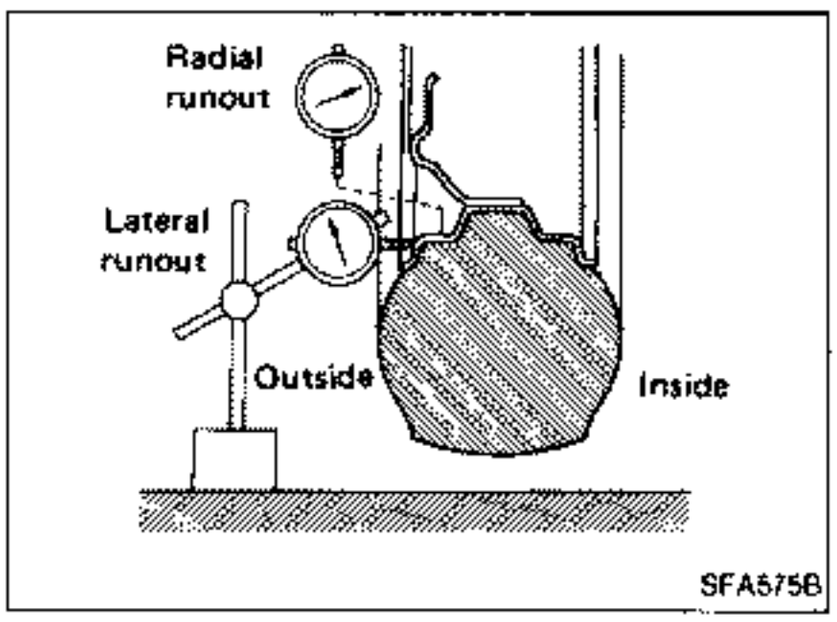

Front Wheel Alignment

Before checking front wheel alignment, be sure to make a preliminary inspection.

PRELIMINARY INSPECTION

Make the following checks. Adjust, repair or replace if necessary.

- Check tires for wear and improper inflation.
- Check front wheel bearings for looseness.
- Check wheel runout.
  Wheel runout: Refer to S.D.S.
- Check front suspension for looseness.
- Check steering linkage for looseness.
- Check that front shock absorbers work properly.
- Check vehicle posture (Unladen).
  ("Unladen": Fuel, radiator coolant and engine oil full. Spare tire, jack, hand tools and mats in designated positions.)

Front Wheel Alignment (Cont'd)

CAMBER, CASTER AND KINGPIN INCLINATION

Camber, caster and kingpin inclination are preset at factory and cannot be adjusted.

1. Set vehicle on turning radius gauge.

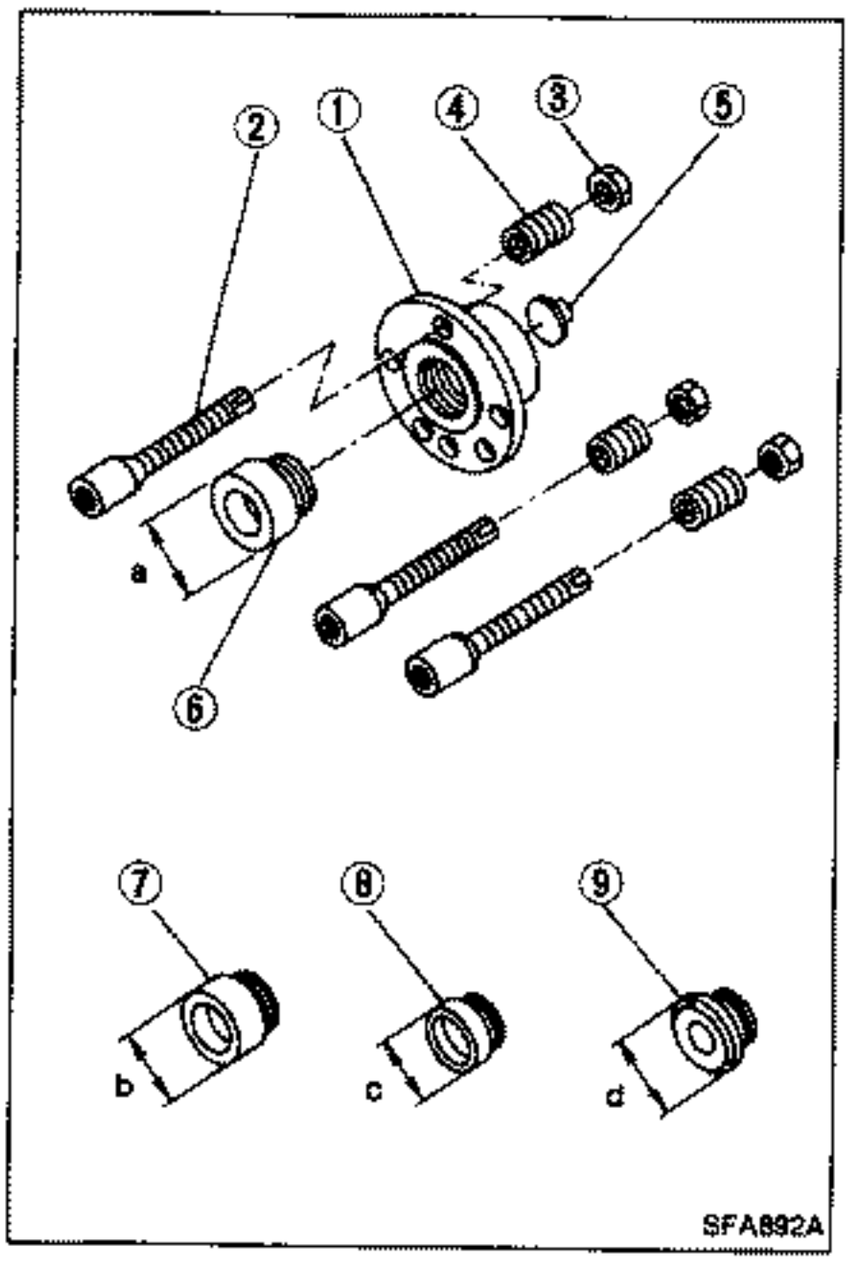

2. Mount Tool as follows.
   Tool number:
   KV991040S0
   KV99104010 ① to ⑤
   KV99104020 ⑥
   KV99104030 ⑦
   KV99104040 ⑧
   KV99104050 ⑨

a. Select adapter which corresponds with wheel or hub shape from four types ⑥ to ⑨.
b. Screw selected adapter in until it contacts plate ①.

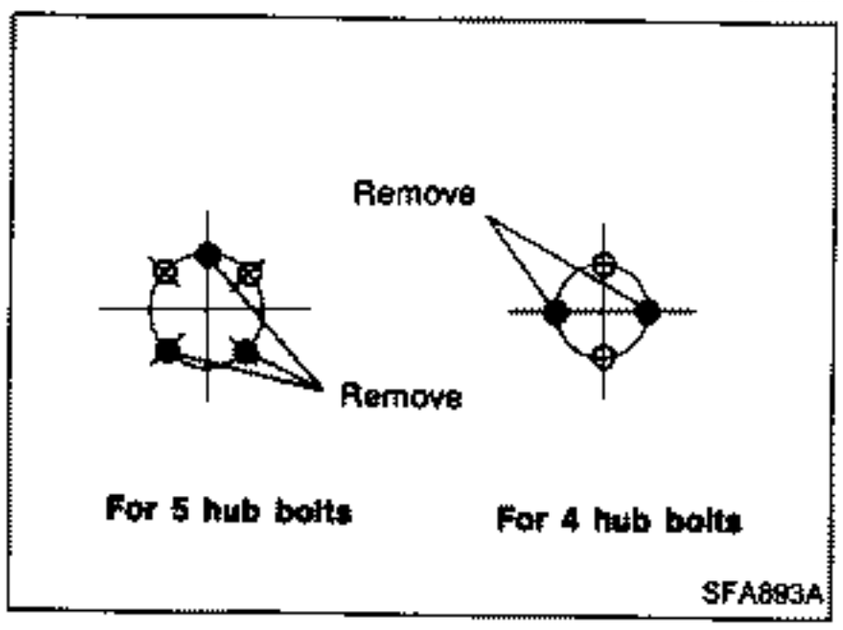

c. Remove wheel nuts.

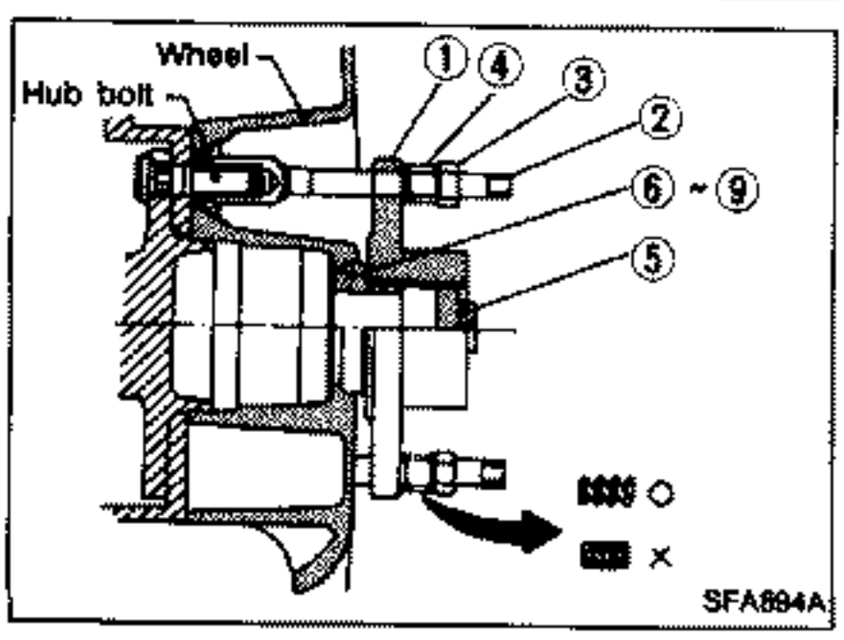

d. Install guide bolts ② to where wheel nuts were removed and tighten them by hand.
e. Install plate and adapter assembly to guide bolts ②.
f. Install springs ④ onto guide bolts ②. Then tighten nuts ③ evenly until a little before springs ④ are completely compressed.
g. Install center plate ⑤.
h. Mount wheel alignment gauge on attachment plate.

Front Wheel Alignment (Cont'd)

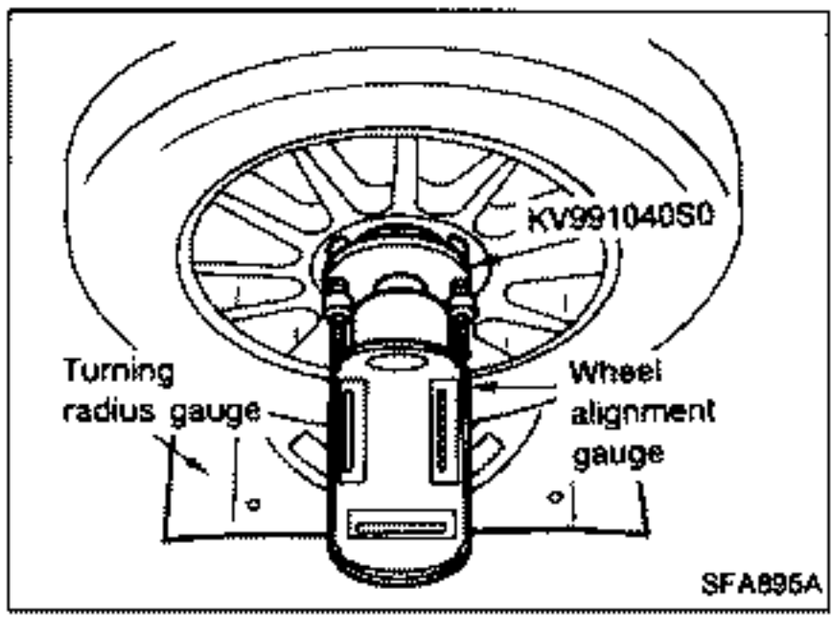

3. Measure camber, caster and kingpin inclination of both right and left wheels with a suitable alignment gauge.
   Camber: –1°35′ to –0°05′
   Caster: 9°00′ - 10°30′
   Kingpin inclination: 12°10′ - 13°40′
4. If camber, caster and kingpin inclination are not within specification, inspect and replace any damaged or worn front suspension parts.

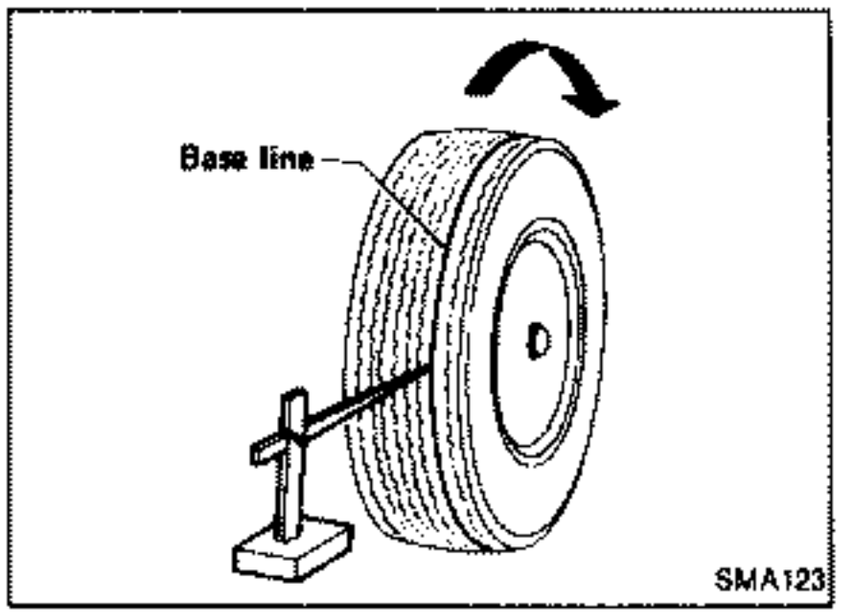

TOE-IN

1. Draw a base line on tread surface of tires.
- After lowering front of vehicle, move it up and down to eliminate friction, and set wheels in straight-ahead position.

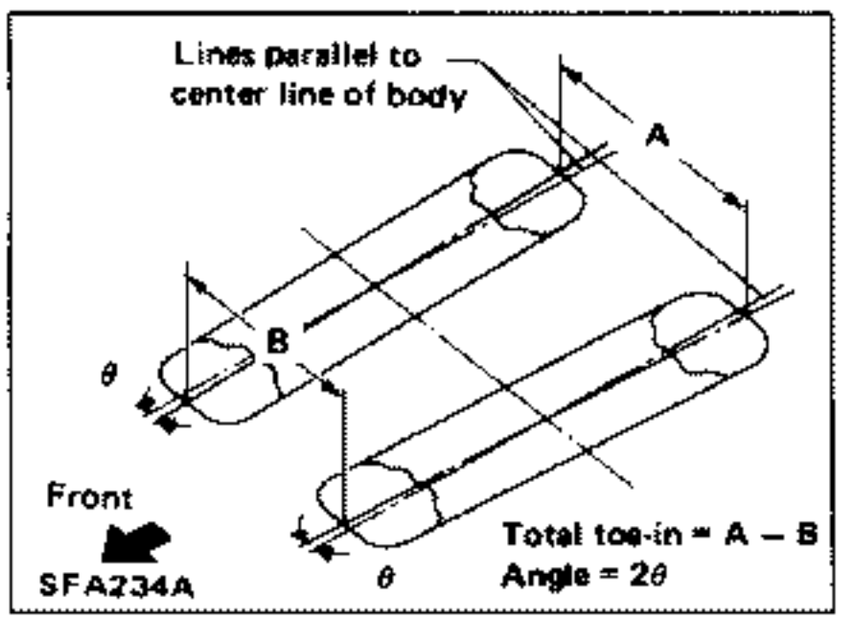

2. Measure toe-in.
- Measure distance "A" and "B" at same height as hub center.
  Total toe-in:
  A – B: 0 - 2 mm (0 - 0.08 in)
  2θ: 0′ - 11′

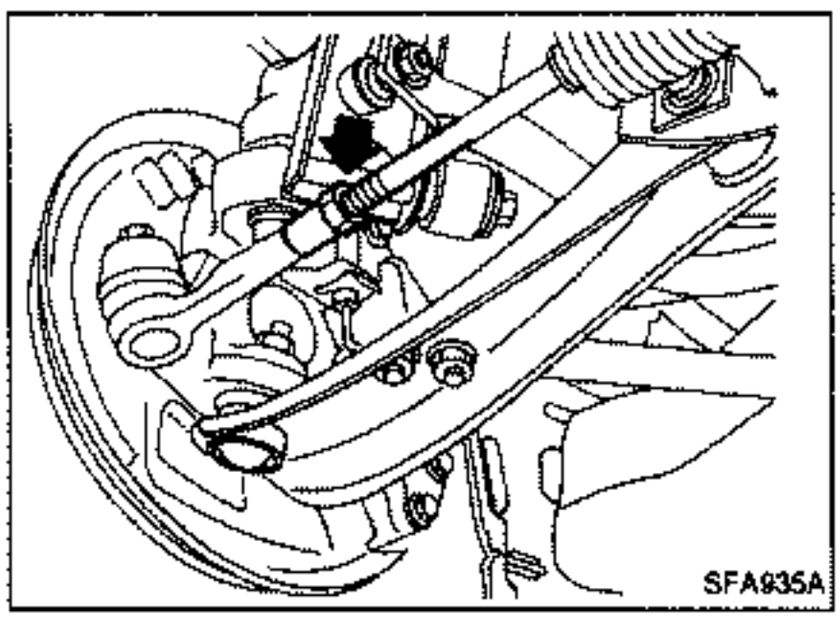

3. Adjust toe-in by varying length of steering tie-rods.
(1) Loosen lock nuts.
(2) Adjust toe-in by turning tie-rod forward or backward.

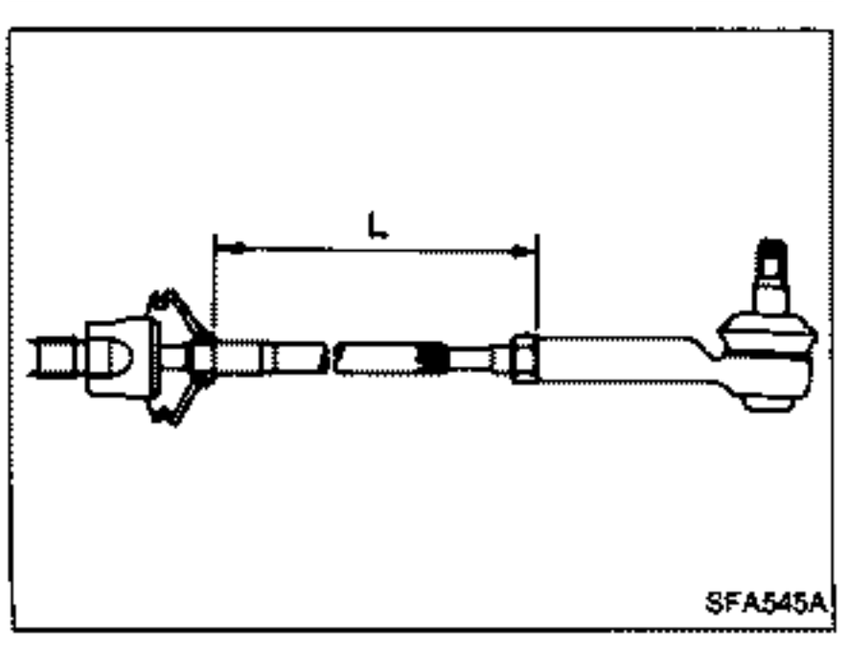

Make sure both tie-rods are the same length.
Standard length "L":
155 mm (6.10 in)
(3) Tighten lock nuts to the specified torque.
[O]: 78 - 98 N·m
(8.0 - 10.0 kg-m, 58 - 72 ft-lb)

Front Wheel Alignment (Cont'd)

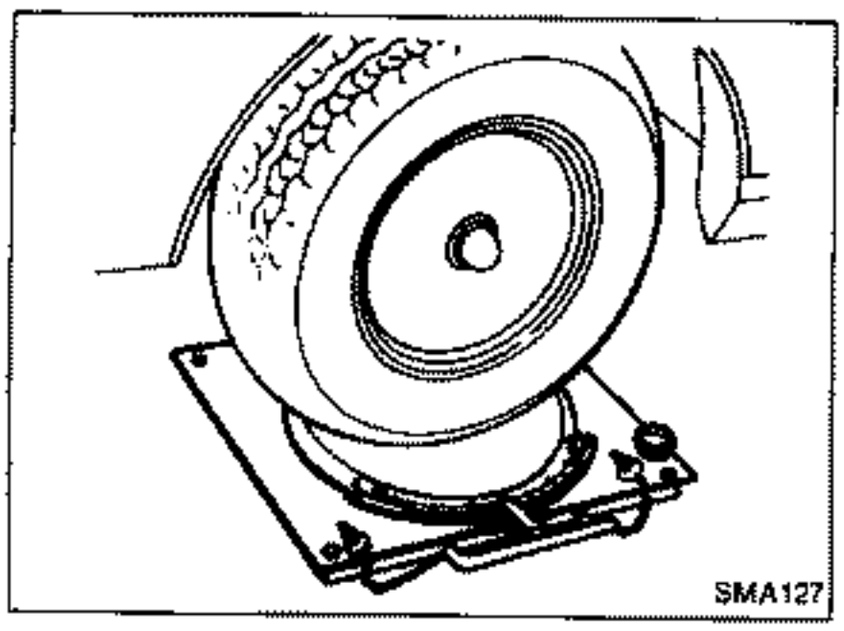

FRONT WHEEL TURNING ANGLE

1. Set wheels in straight-ahead position and then move vehicle forward until front wheels rest on turning radius gauge properly.

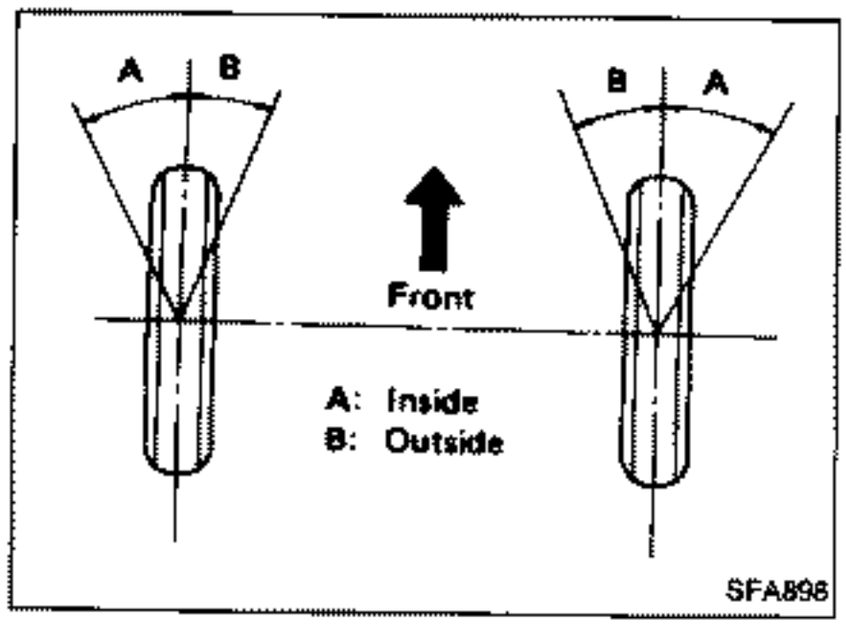

2. Rotate steering wheel fully to the right or left with a force of 98 to 147 N (10 to 15 kg, 22 to 33 lb) while engine is running at idle and measure turning angle.

Do not hold the steering wheel at full lock for more than 15 seconds.

Wheel turning angle (Full turn):

Inside wheel (A): 32° - 36°

Outside wheel (B): 27° - 31°

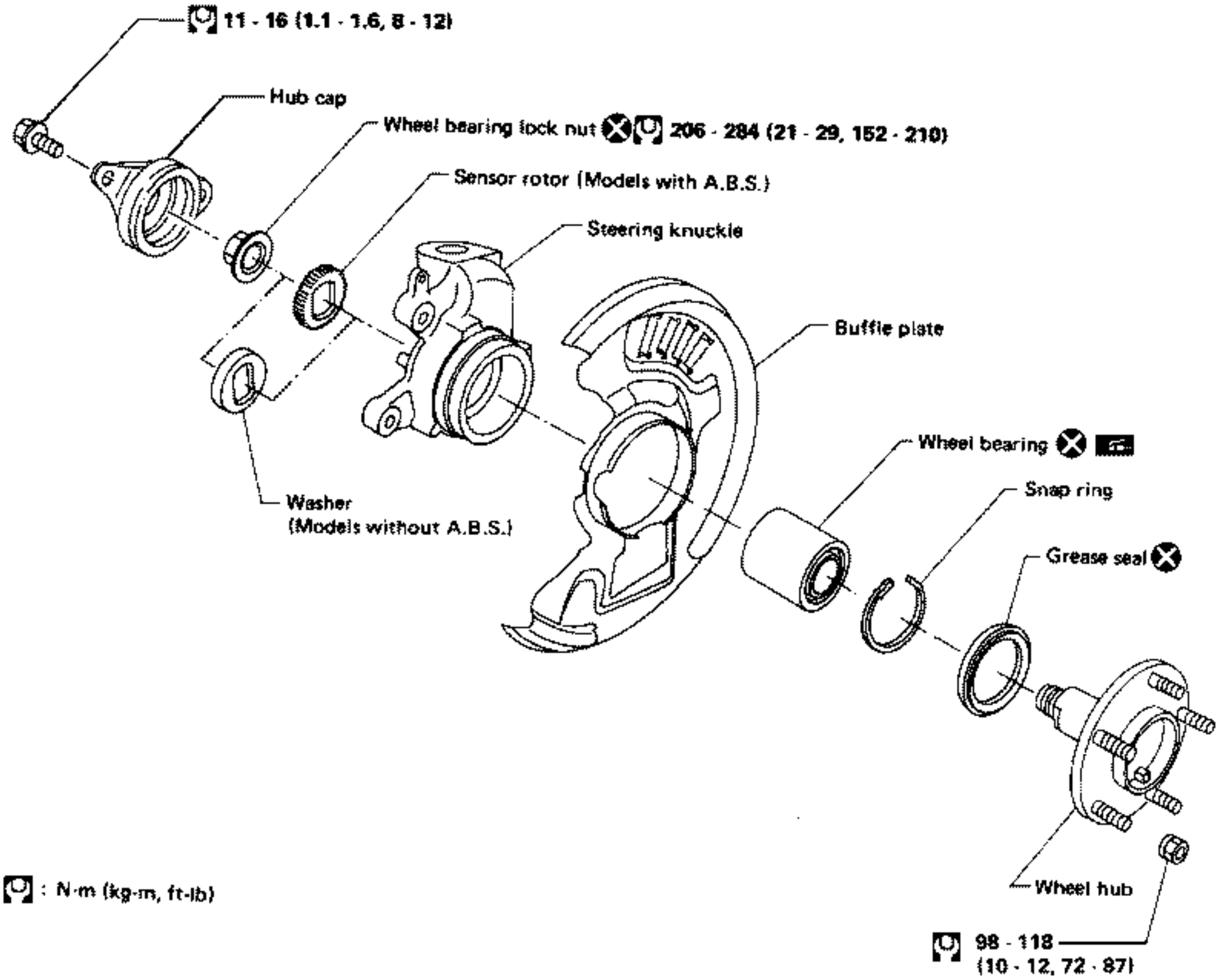

: N·m (kg-m, ft-lb)

SFA891A

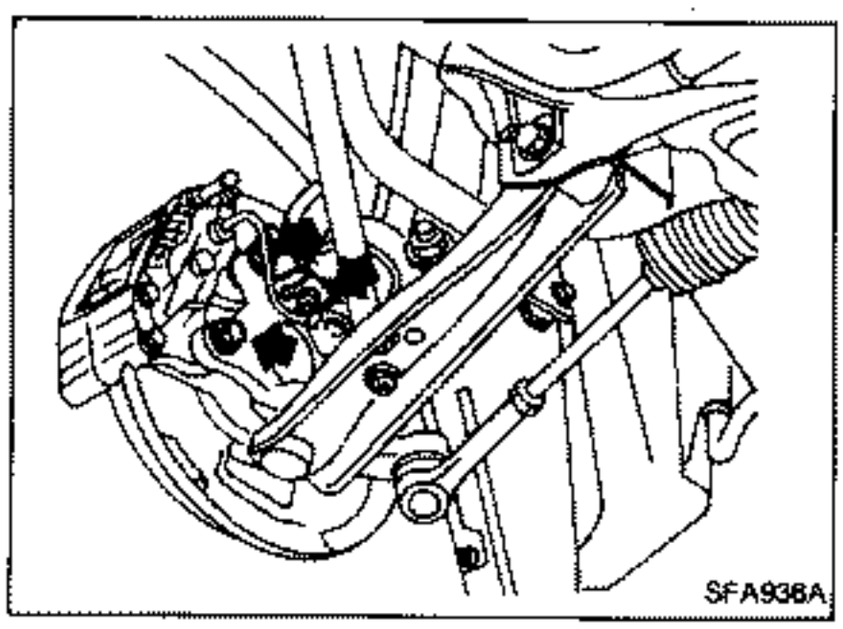

Removal

CAUTION:
Wheel bearing usually does not require maintenance. If any of the following symptoms are noted, replace wheel bearing assembly.

- **Growling noise is emitted from wheel bearing during operation.**
- **Wheel bearing drags or turns roughly when hub is turned by hand.**
- Remove brake caliper assembly and rotor.

Brake hose need not be disconnected from brake caliper. Be careful not to depress brake pedal, or piston will pop out.
Do not pull or twist brake hose.

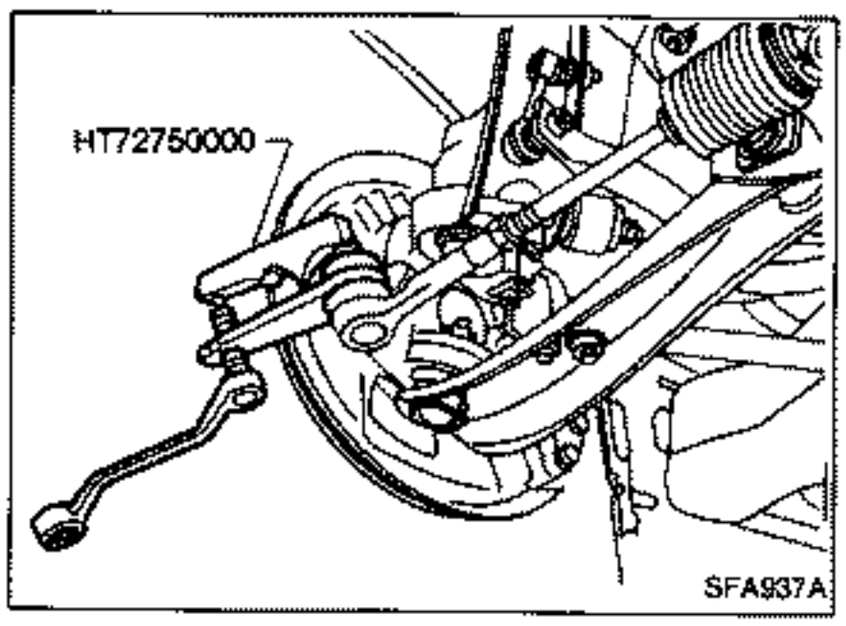

- Remove tie-rod ball joint and lower ball joint with Tool.

CAUTION:
Steering knuckle is made from aluminum alloy.
Be careful not to hit steering knuckle.

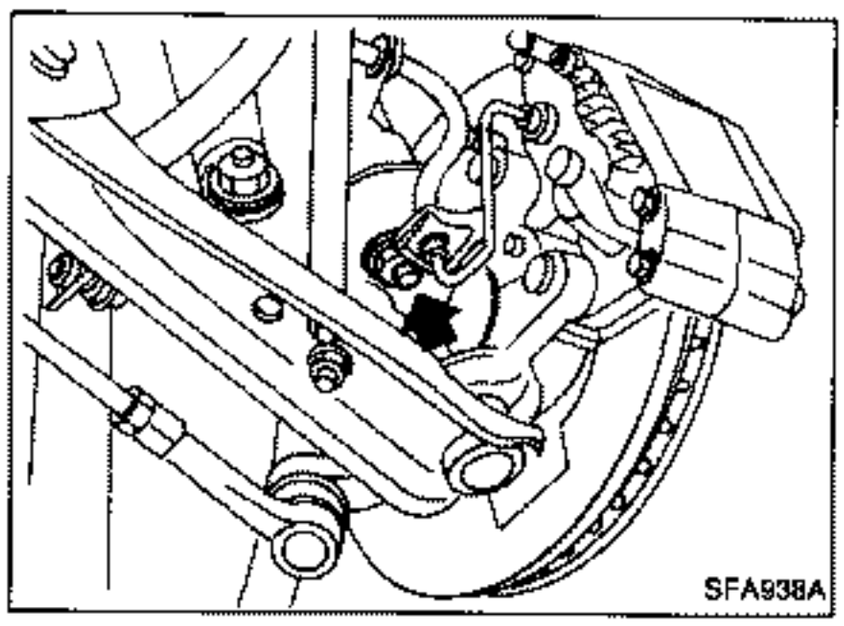

- Remove kingpin lower nut then remove steering knuckle assembly.

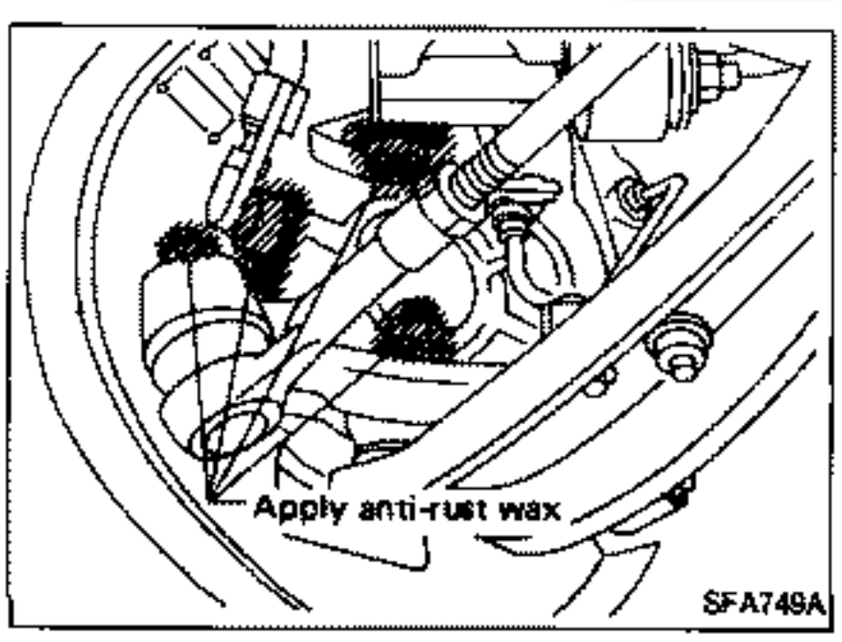

Installation

- Install steering knuckle assembly.
- Apply anti-rust wax as follows:
  - Portions around lower ball joint connections
  - Portions around tie-rod ball joint connections
  - Portions around kingpin lower nut location
  - Portions around A.B.S. sensor connection

Disassembly

CAUTION:
When removing wheel bearing from steering knuckle, replace wheel bearing assembly (outer race, inner races and grease seal) with a new one.

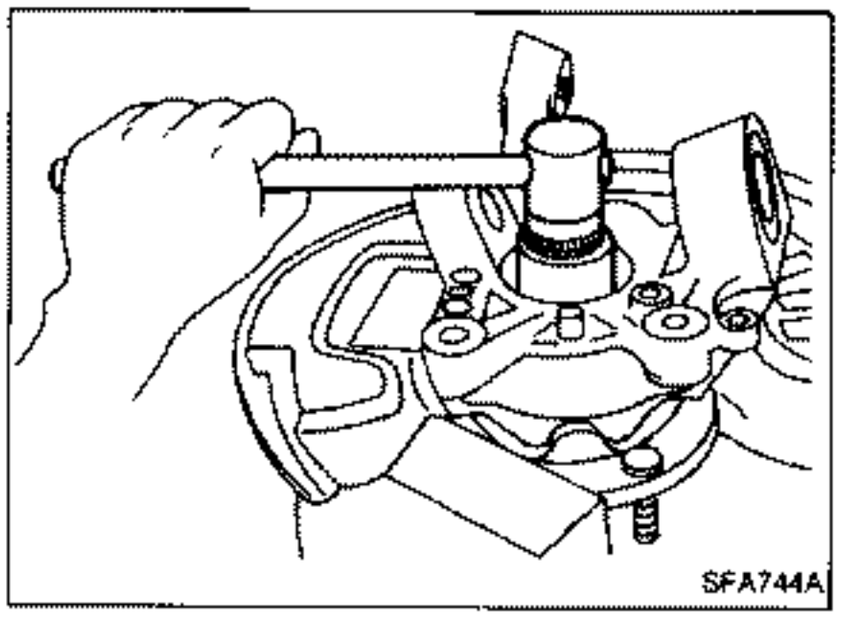

- Remove hub cap and wheel bearing lock nut.

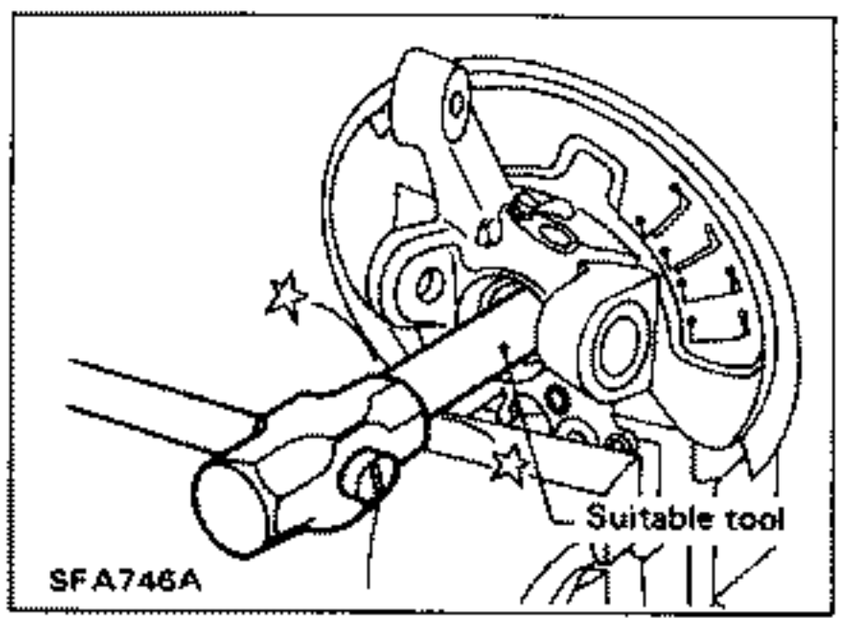

- Remove wheel hub with a suitable tool.

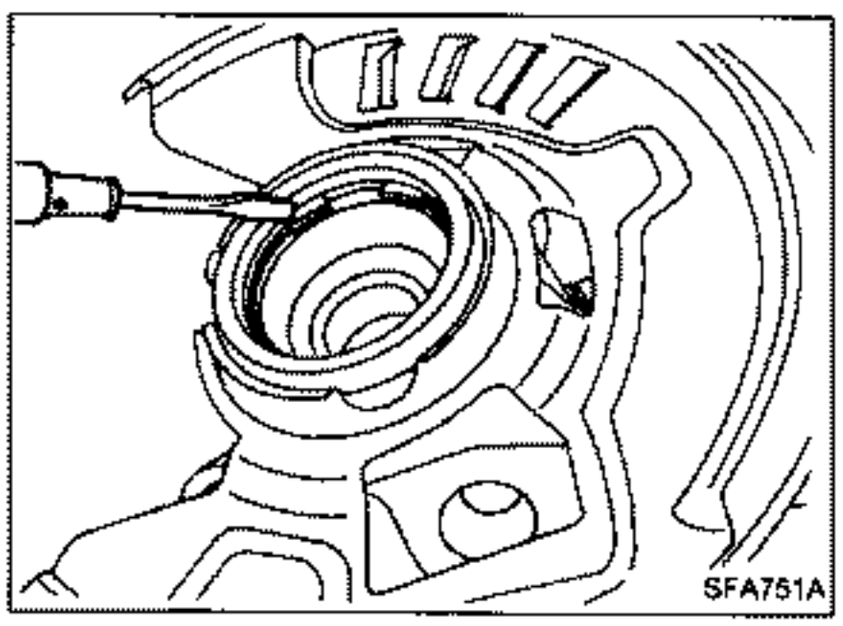

- Remove circular clip with a suitable tool.

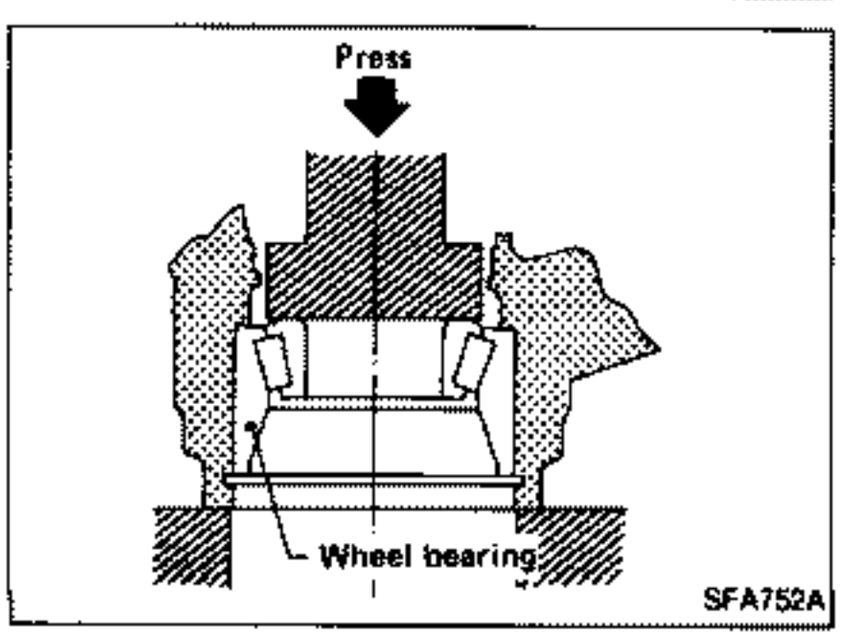

- Press out wheel bearing assembly from steering knuckle.

Disassembly (Cont'd)

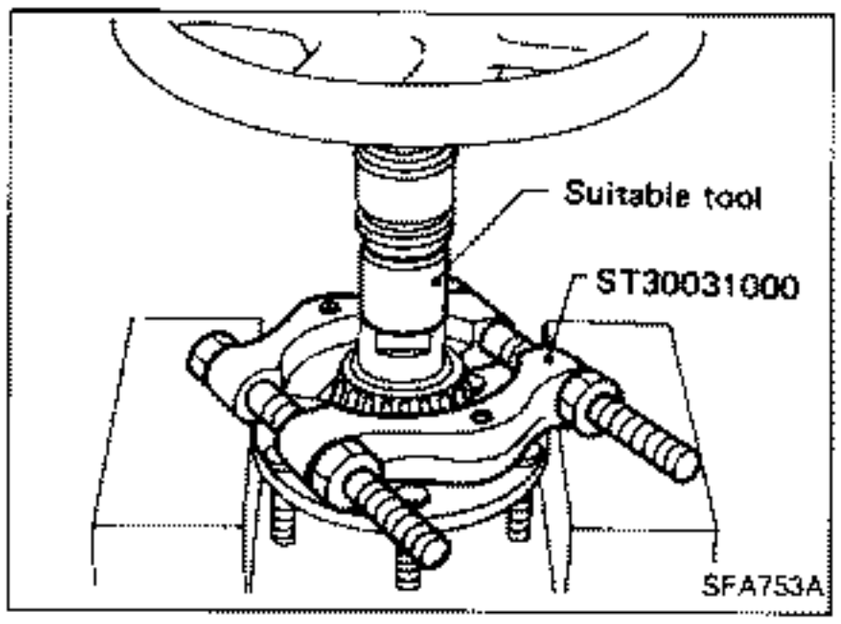

- Drive out wheel bearing inner race (to outside) from wheel hub, then remove grease seal.

Inspection

WHEEL HUB AND STEERING KNUCKLE

Check wheel hub and steering knuckle for any cracks.

CIRCULAR CLIP

Check circular clip for wear or cracks.
Replace if necessary.

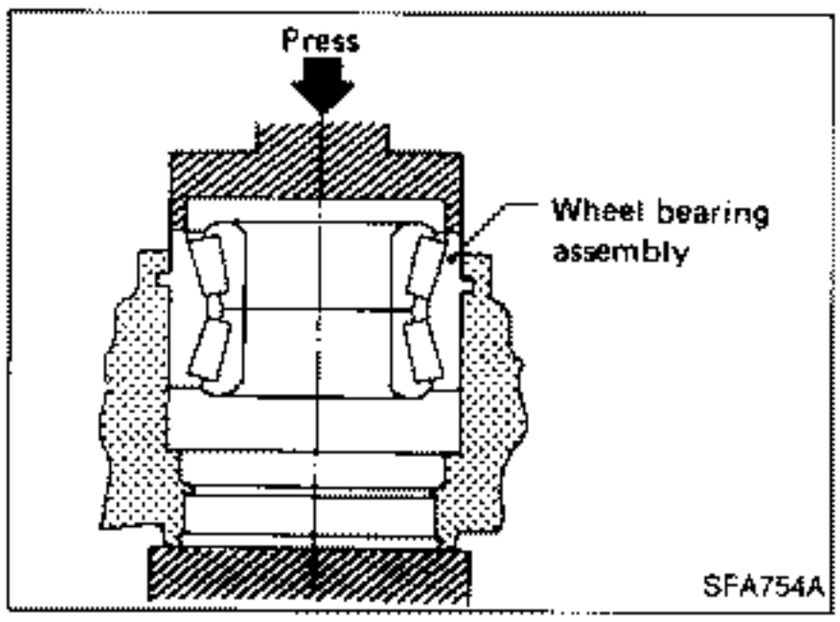

Assembly

1. Press new wheel bearing assembly into steering knuckle from outside of steering knuckle.
   Maximum load P:
   34.3 kN (3.5 t, 3.9 US ton, 3.44 Imp ton)

CAUTION:

- **Do not press inner race of wheel bearing assembly.**
- **Do not apply oil or grease to mating surfaces of wheel bearing outer race and wheel hub.**

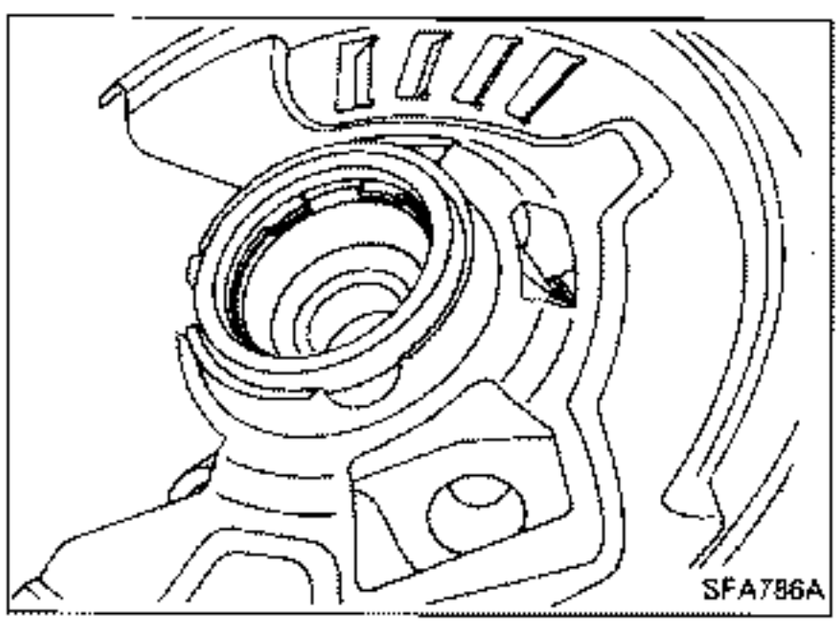

2. Install circular clip into groove of steering knuckle.

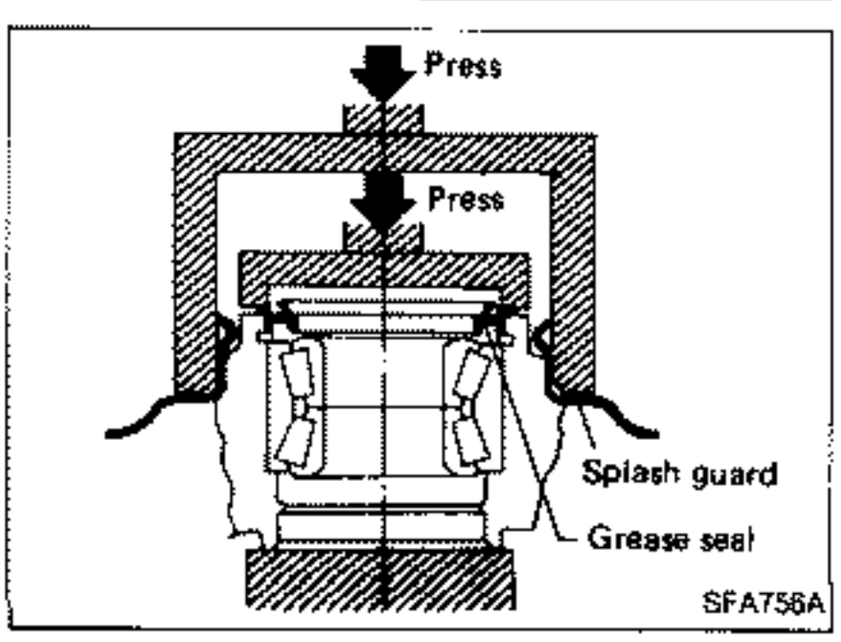

3. Apply multi-purpose grease to sealing lip.
4. Install grease seal.
   Maximum load P:
   10 kN (1 t, 1.1 US ton, 1.0 Imp ton)
5. Install splash guard.

Assembly (Cont'd)

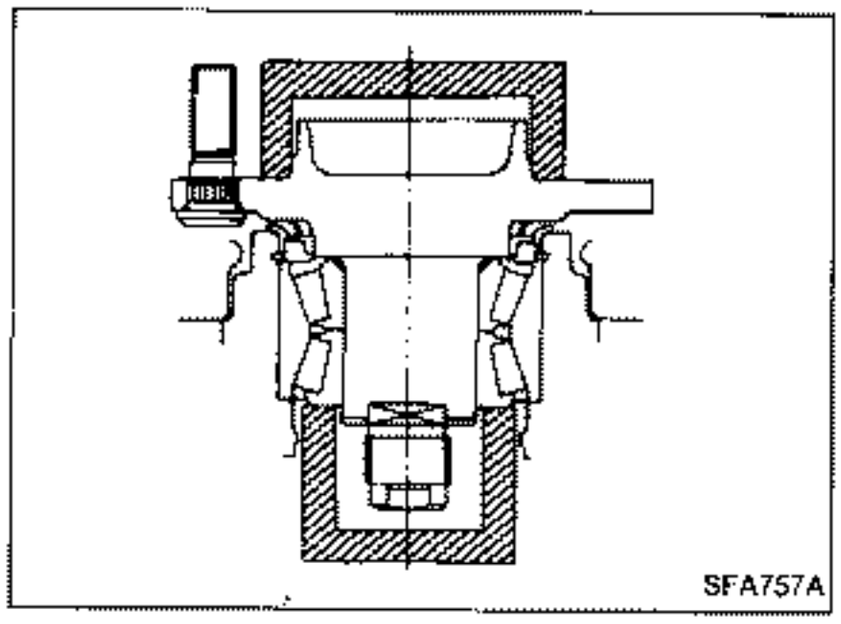
SFA757A

6. Press wheel hub into steering knuckle.
   Maximum load P:
   29 kN (3 t, 3.3 US ton, 3.0 Imp ton)
7. Tighten wheel bearing lock nut to the specified torque.
   : 206 - 284 N·m (21 - 29 kg-m, 152 - 210 ft-lb)

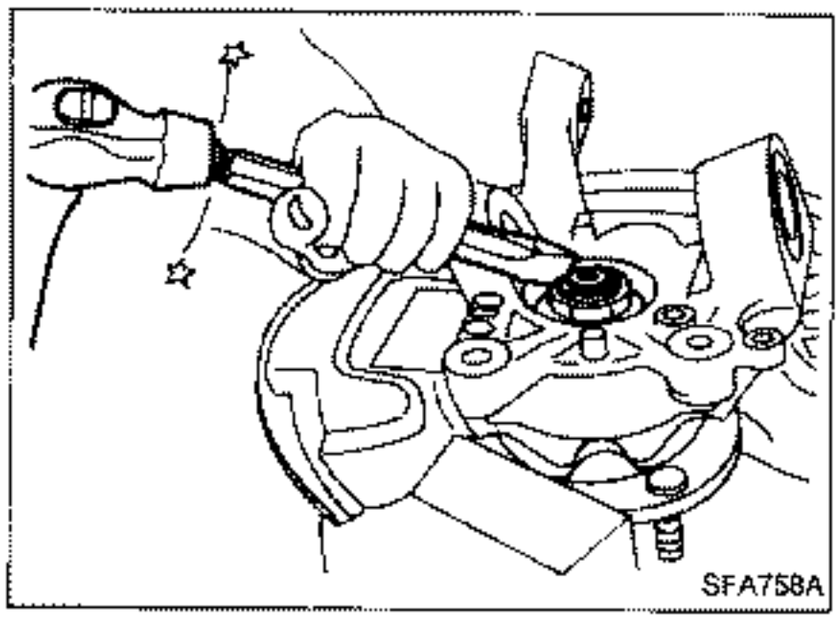
SFA758A

8. Stake wheel bearing lock nut.

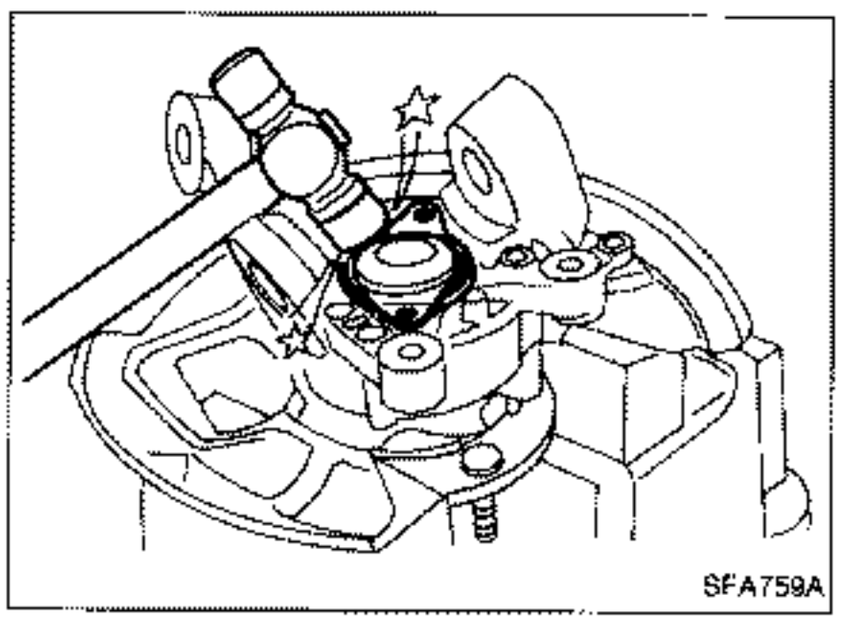
SFA759A

9. Install hub cap.
   Drive hub cap onto steering knuckle by lightly tapping with a plastic hammer. After hub cap is in close contact with steering knuckle, tighten bolts.

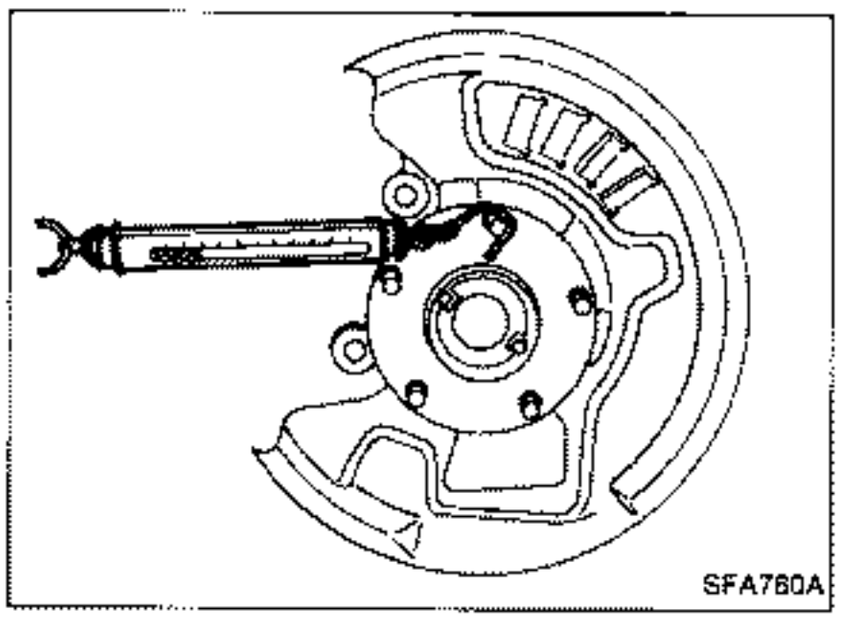
SFA760A

10. Check wheel bearing preload and axial end play.

Before checking, spin wheel hub at least 10 revolutions in both directions.

Turning torque:
0.34 - 2.16 N·m (3.5 - 22.0 kg-cm, 3.0 - 19.1 in-lb)
(NSK bearing)
0.44 - 3.33 N·m (4.5 - 34.0 kg-cm, 3.9 - 29.5 in-lb)
(NTN bearing)
As measured at wheel hub bolt:
5.9 - 37.3 N (0.6 - 3.8 kg, 1.3 - 8.4 lb)
(NSK bearing)
7.8 - 57.9 N (0.8 - 5.9 kg, 1.8 - 13.0 lb)
(NTN bearing)
Axial end play:
0.05 mm (0.0020 in) or less

Final tightening for rubber parts must be done under unladen condition, with tires on ground.*
* Fuel, radiator coolant and engine oil full.
Spare tire, jack, hand tools and mats in designated positions.

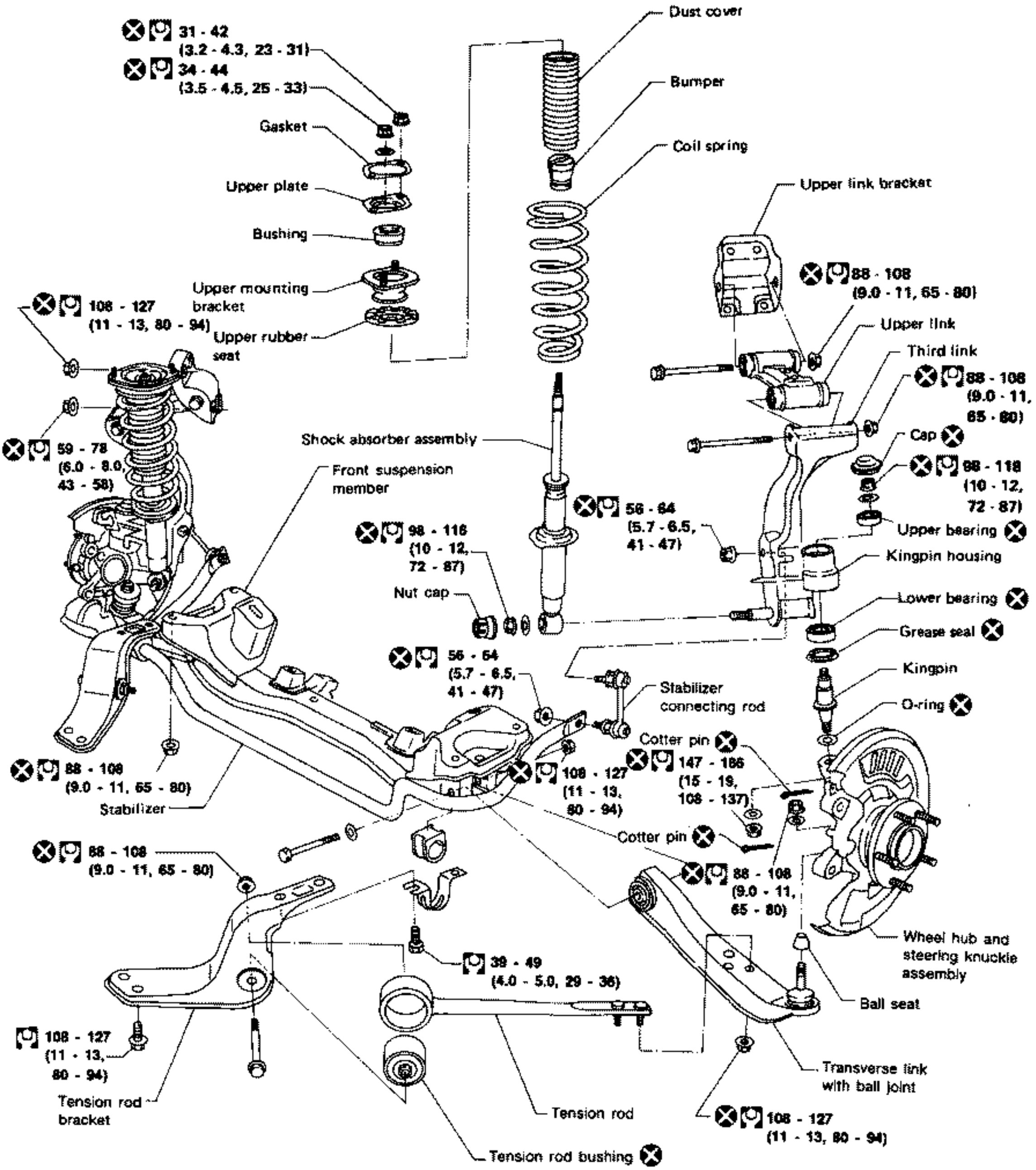

: N·m (kg-m, ft-lb)

SFA890A

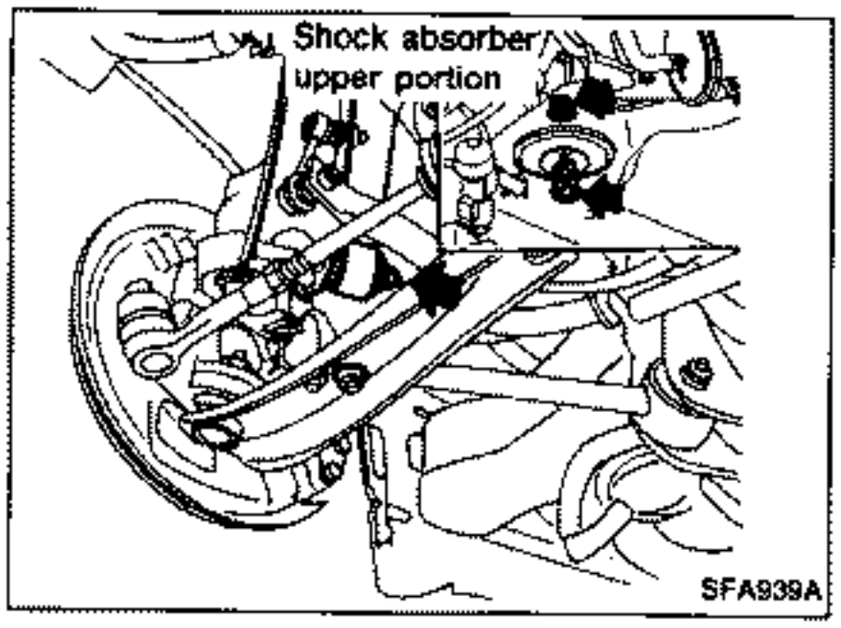

Removal

- Remove shock absorber fixing bolt and nut (to hoodledge).

Do not remove piston rod lock nut.

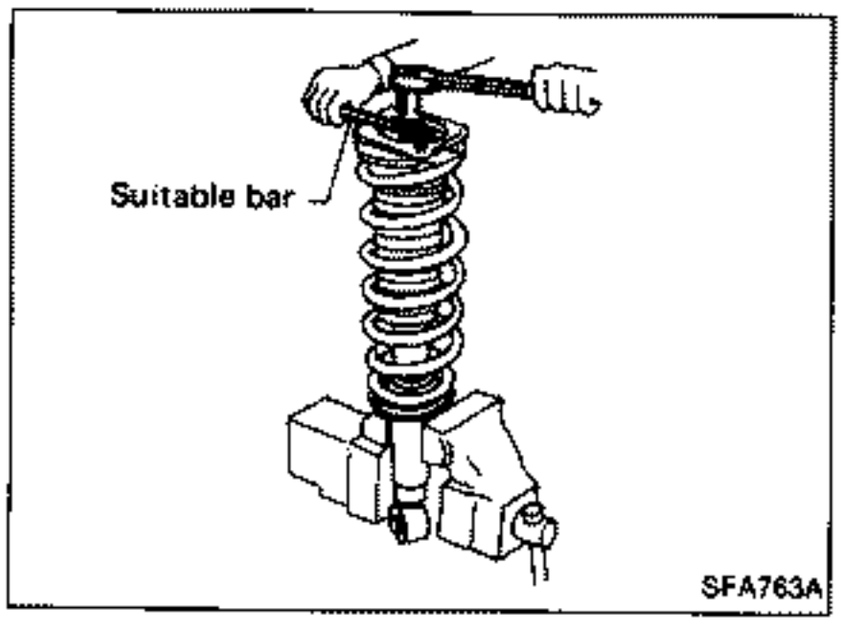

Disassembly

1. Set shock absorber on vise with Tool, then loosen piston rod lock nut.

Do not remove piston rod lock nut.

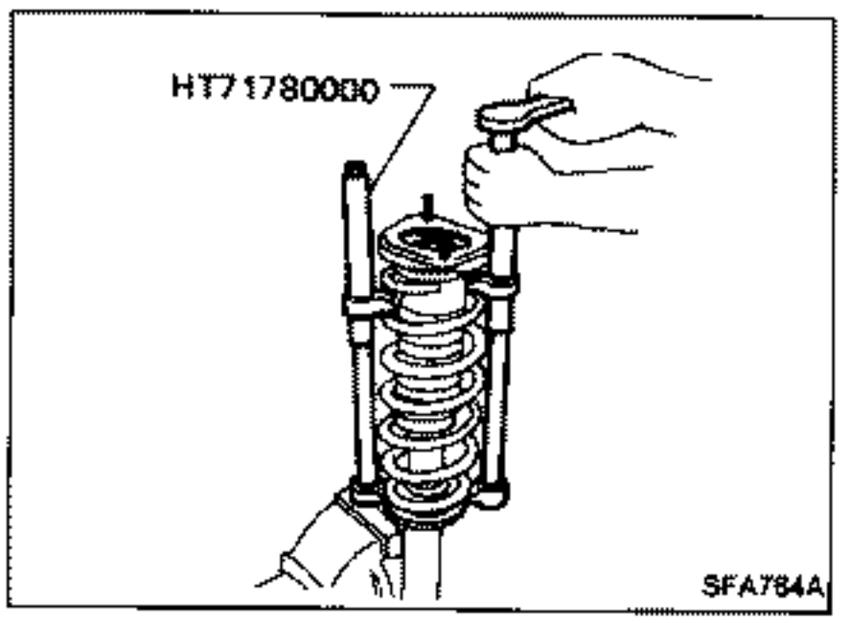

2. Compress spring with Tool so that shock absorber mounting insulator can be turned by hand.

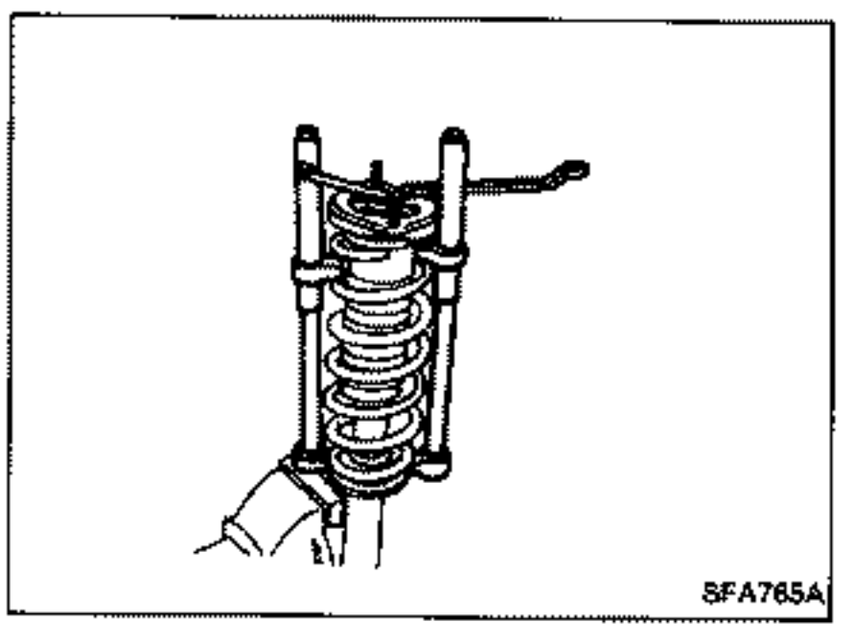

3. Remove piston rod lock nut.

Inspection

SHOCK ABSORBER ASSEMBLY

- Check for smooth operation through a full stroke, both compression and extension.
- Check for oil leakage occurring on welded or gland packing portions.
- Check piston rod for cracks, deformation or other damage. Replace if necessary.

Inspection (Cont'd)

MOUNTING INSULATOR AND RUBBER PARTS

Check cemented rubber-to-metal portion for separation or cracks. Check rubber parts for deterioration.
Replace if necessary.

COIL SPRING

Check for cracks, deformation or other damage. Replace if necessary.

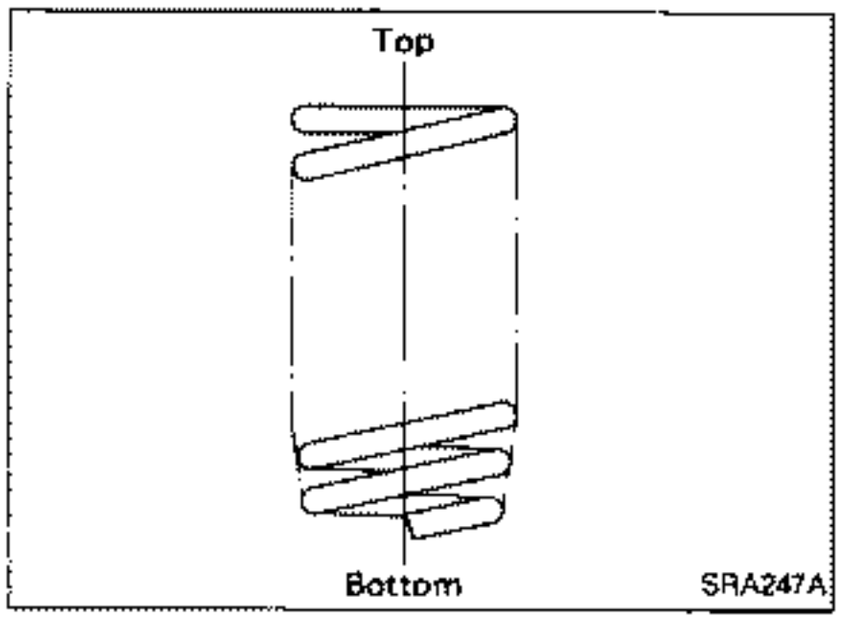

Assembly

- When installing coil spring, be careful not to reverse top and bottom direction. (Top end is flat.)

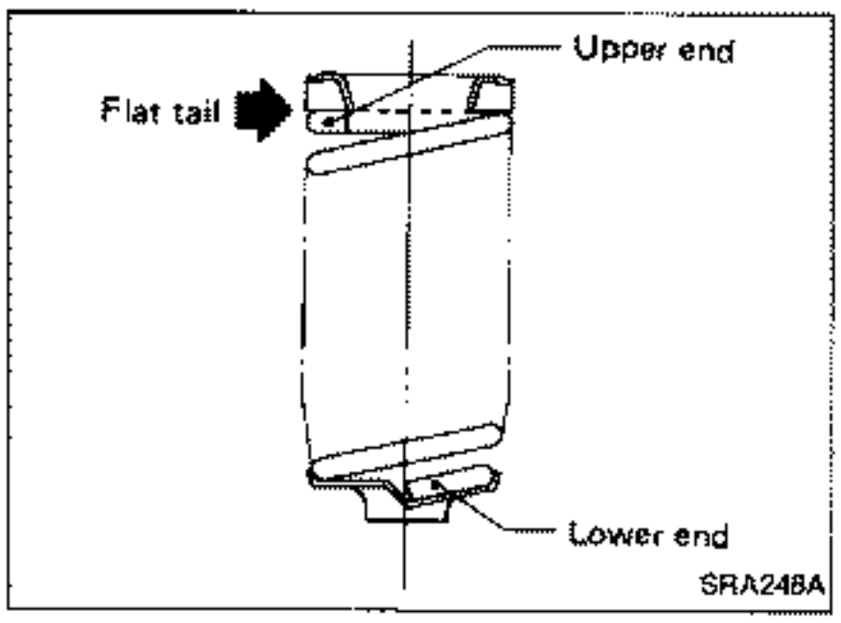

- When installing coil spring on shock absorber, it must be positioned as shown in figure at left.

Removal

CAUTION:
Kingpin bearing usually does not require maintenance. If any of the following symptoms are noted, replace kingpin bearing assembly.

- **Growling noise is emitted from kingpin bearing during operation.**
- **Kingpin bearing drags or turns roughly when steering knuckle is turned by hand.**

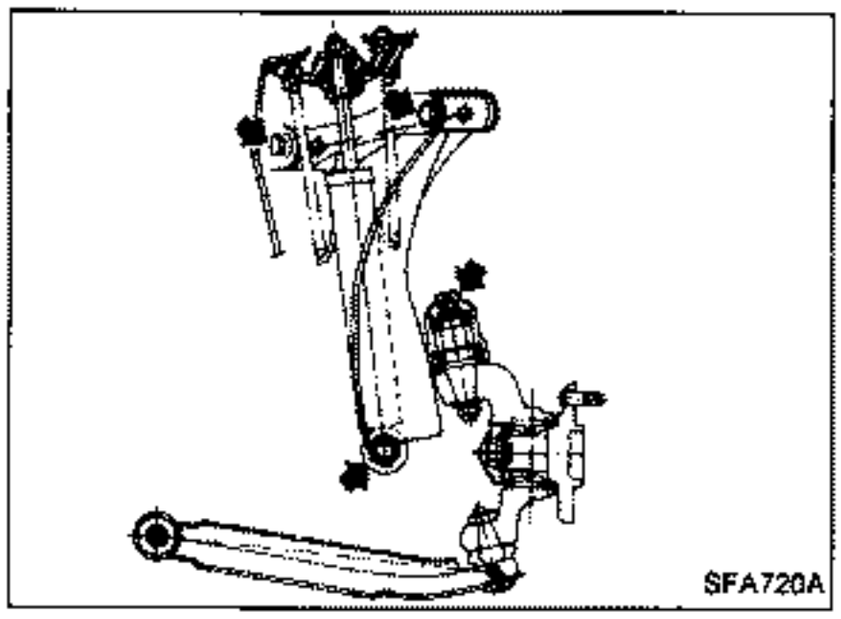

1. Remove cap and kingpin upper nut.

Do not remove kingpin lower nut.

2. Remove shock absorber fixing nut and upper link fixing bolts.
3. Remove third link and upper link.

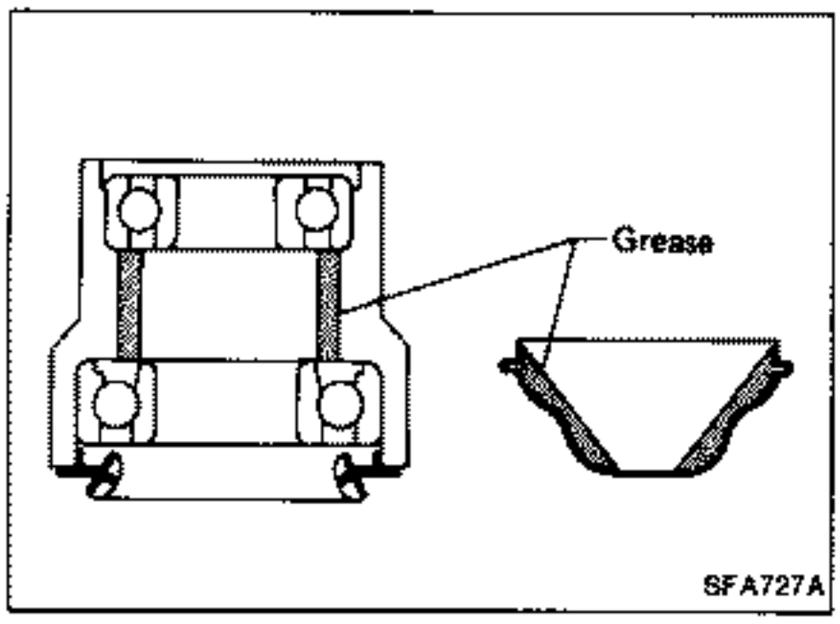

Installation

THIRD LINK

- Pack kingpin housing and cap with multi-purpose grease.

Grease capacity:

Kingpin housing	**10 g (0.35 oz)**
Cap	**5 g (0.18 oz)**

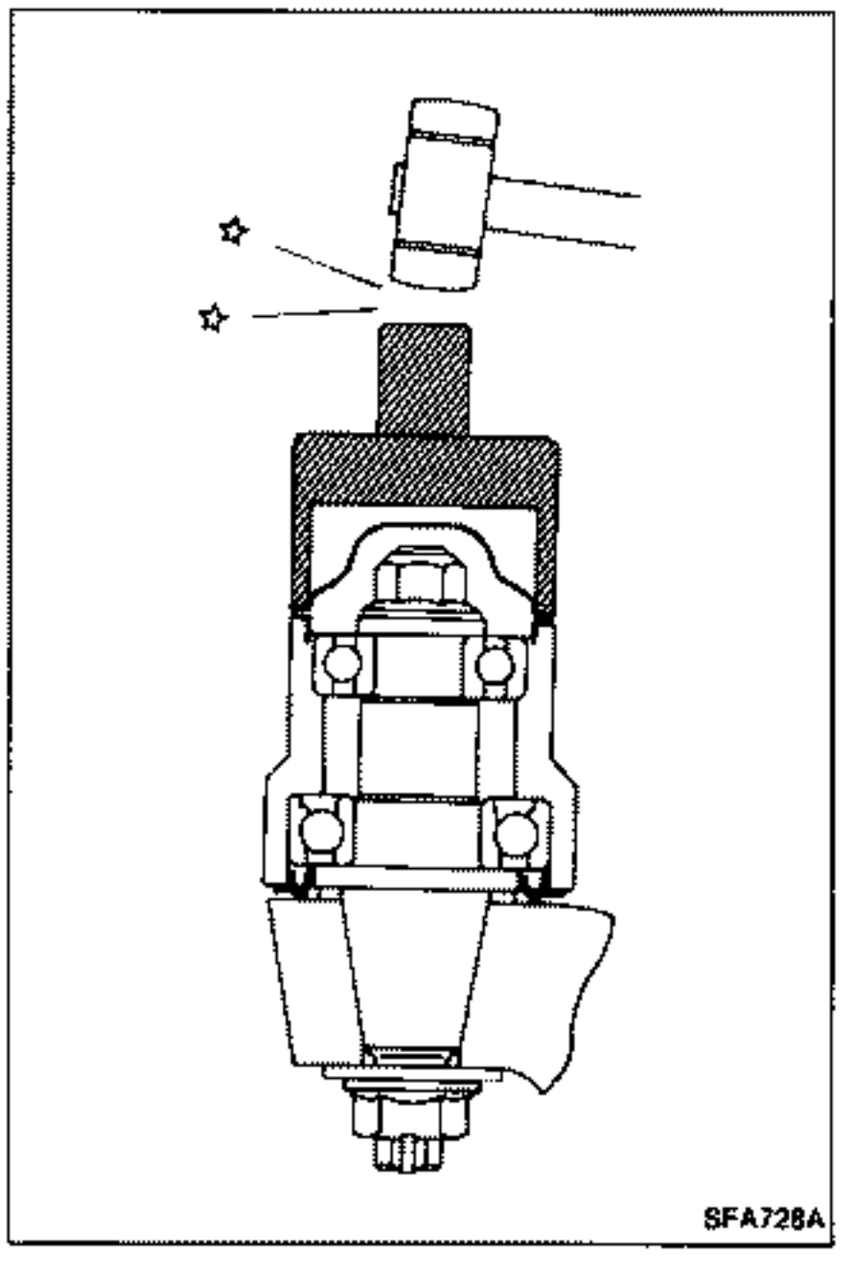

- Install third link and cap.

Installation (Cont'd)

UPPER LINK

- Upper link has characters "A" and "L" (or "R") on it as shown. Always install upper link with "A" side facing axle and side without a character facing vehicle body.

Upper link bushings cannot be disassembled.

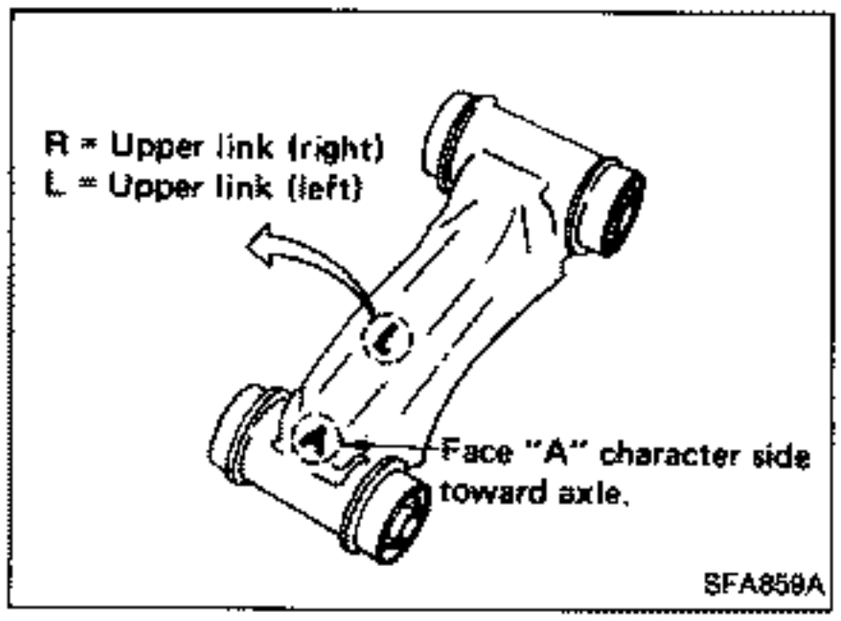

Disassembly

- Remove upper bearing (inner race and ball).

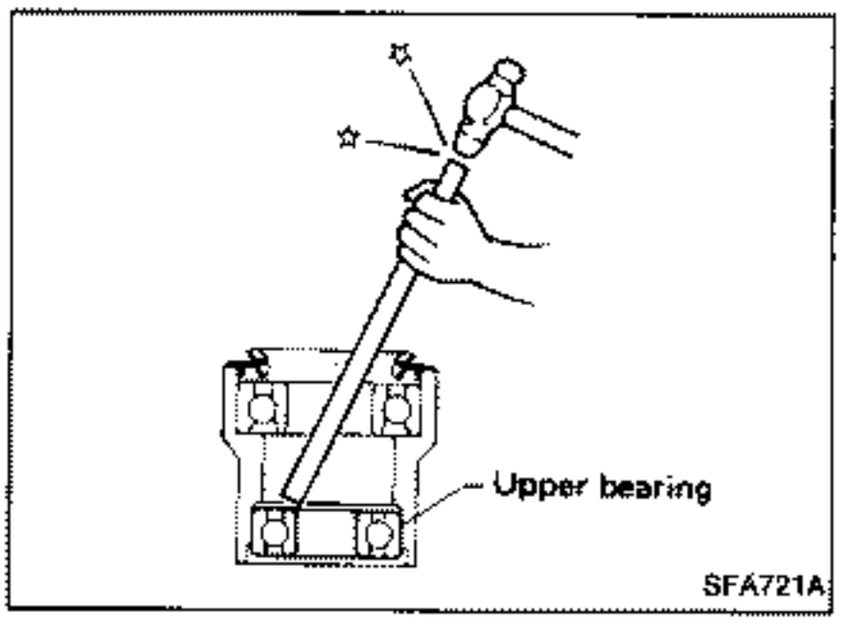

- Remove kingpin grease seal.
- Remove lower bearing (inner race and ball).

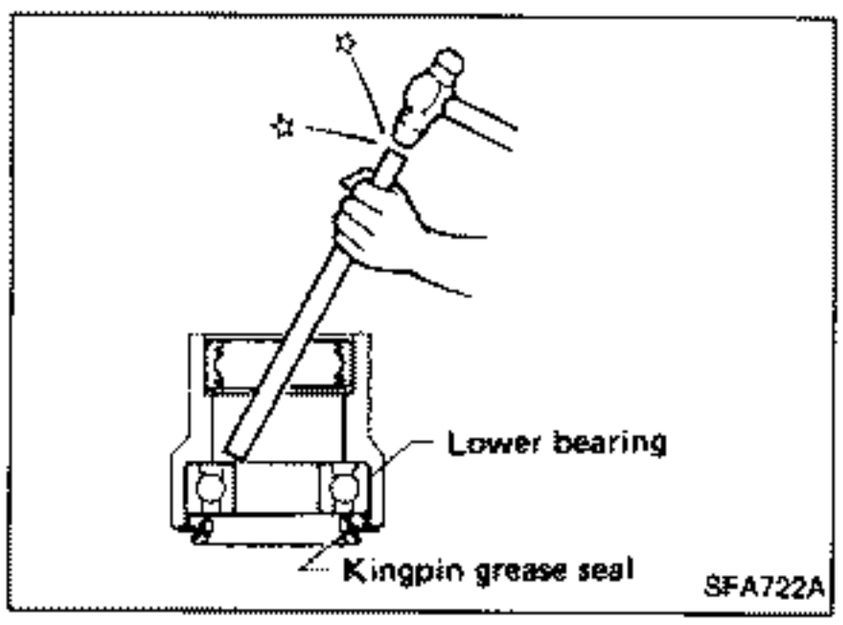

- Remove upper and lower outer race.

Be careful not to damage kingpin housing.

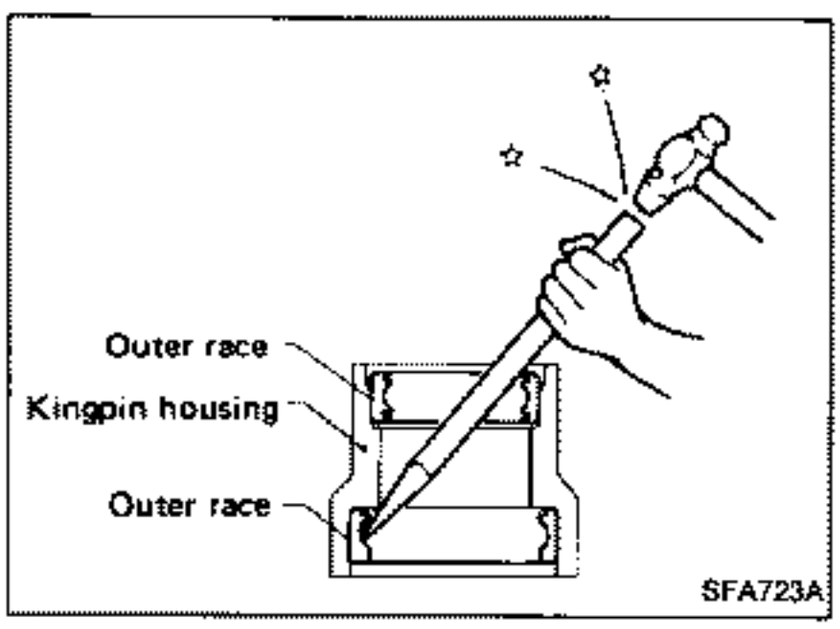

Assembly

- Install lower bearing.

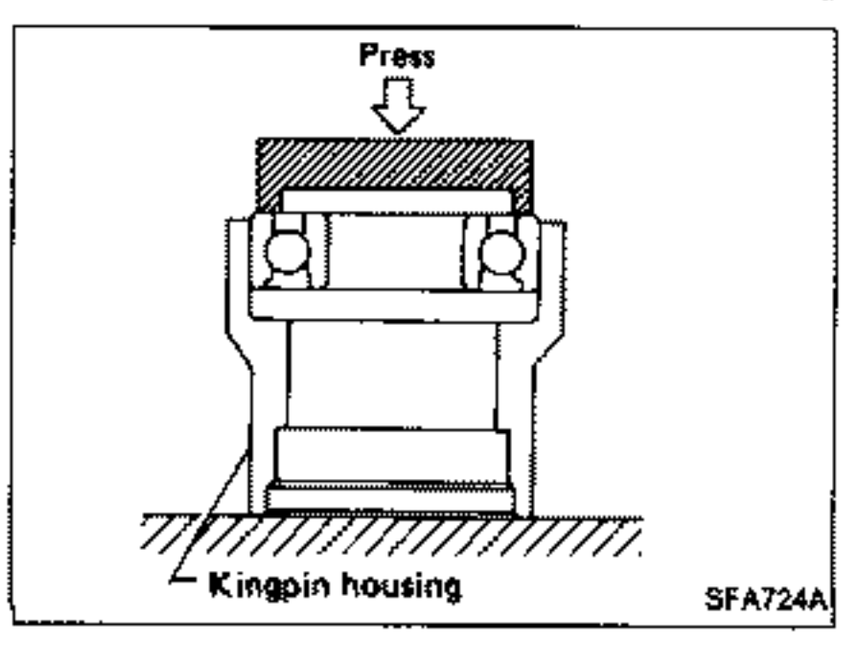

Assembly (Cont'd)

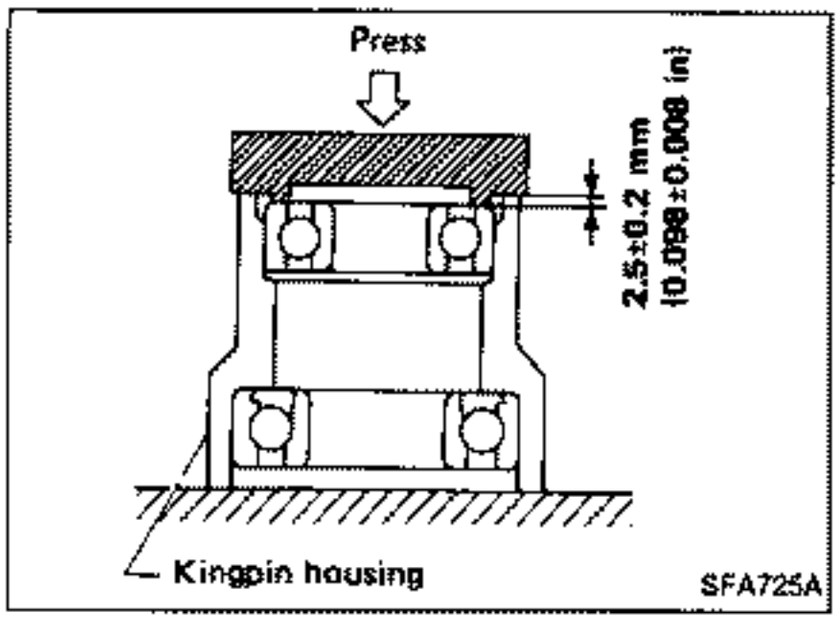

- Install upper bearing.

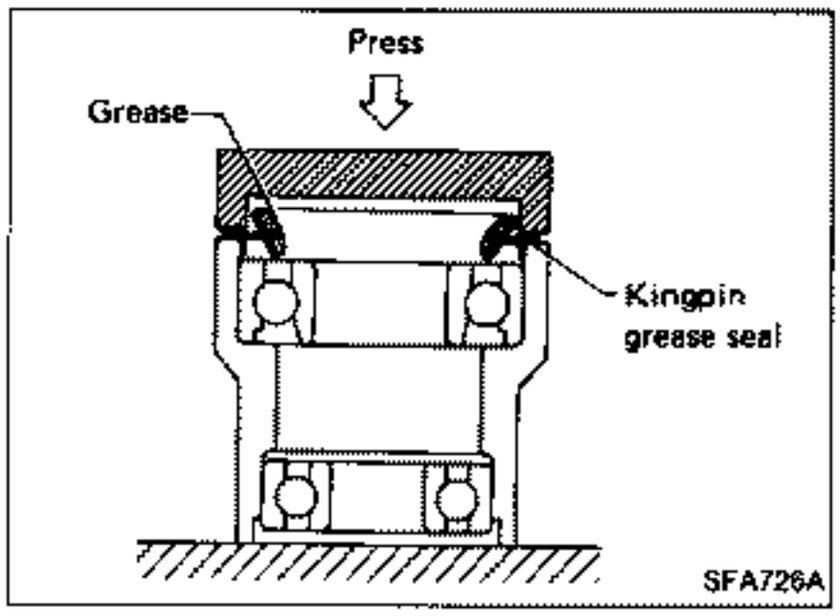

- Install lower oil seal.
- Apply multi-purpose grease to oil seal lip.

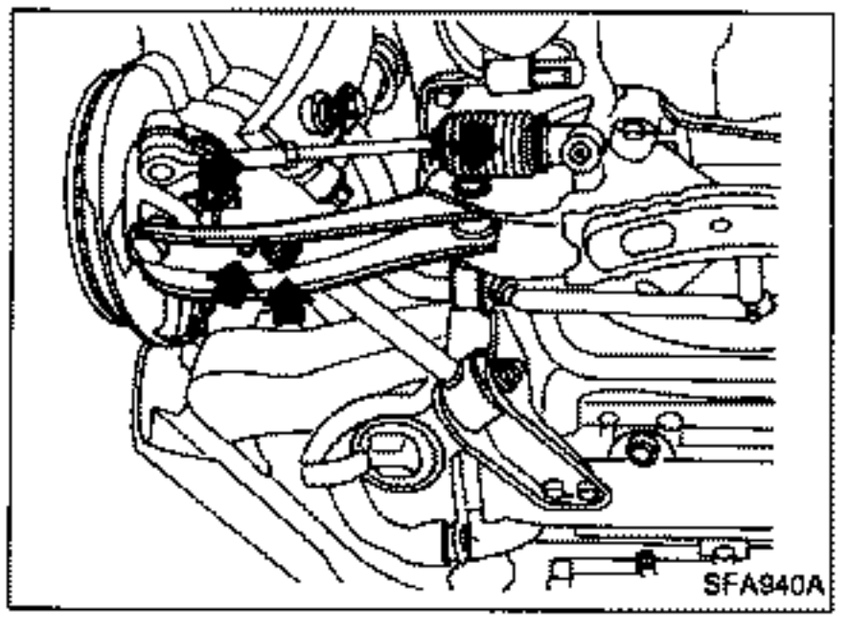

Removal and Installation

- Remove tension rod, ball joint and transverse link assembly.
- During installation, final tightening must be done at curb weight with tires on ground.
- After installation, check wheel alignment.
  Refer to "Front Wheel Alignment" in CHECK AND ADJUSTMENT — On-vehicle.

Inspection

TRANSVERSE LINK

- Check transverse link for damage, cracks or deformation. Replace it if necessary.
- Check rubber bushing for damage, cracks and deformation. Replace transverse link if necessary.

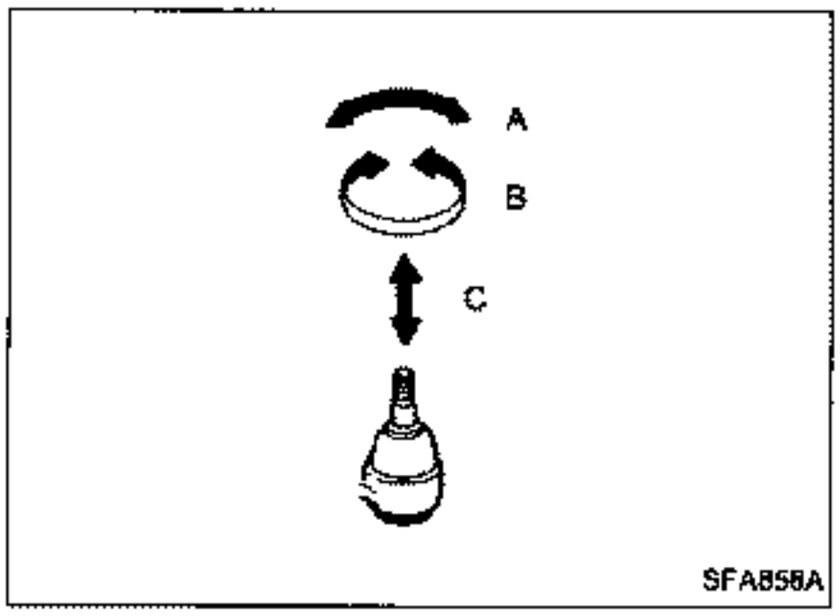

LOWER BALL JOINT

Check ball joint for play. If ball stud is worn, play in axial direction is excessive or joint is hard to swing, replace transverse link assembly.

Swing force and turning torque

Before checking, turn ball joint at least 10 revolutions so that ball joint is properly broken in.

Swing force "A":
(measuring point: cotter pin hole of ball stud)
7.8 - 53.0 N (0.8 - 5.4 kg, 1.8 - 11.9 lb)
Turning torque "B":
0.49 - 3.43 N·m (5.0 - 35 kg-cm, 4.3 - 30.4 in-lb)
Vertical end play "C":
0 mm (0 in)

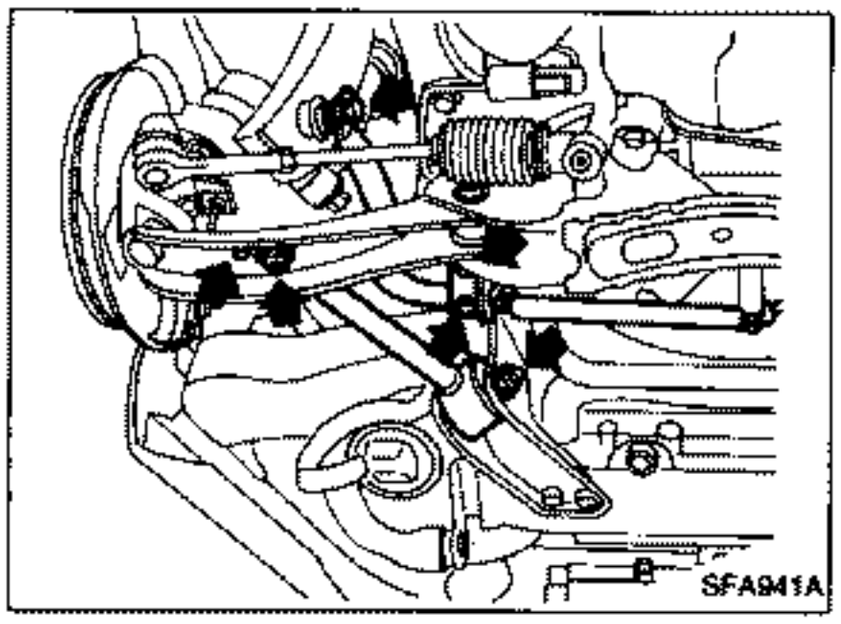

Removal and Installation

- Remove tension rod and stabilizer bar.

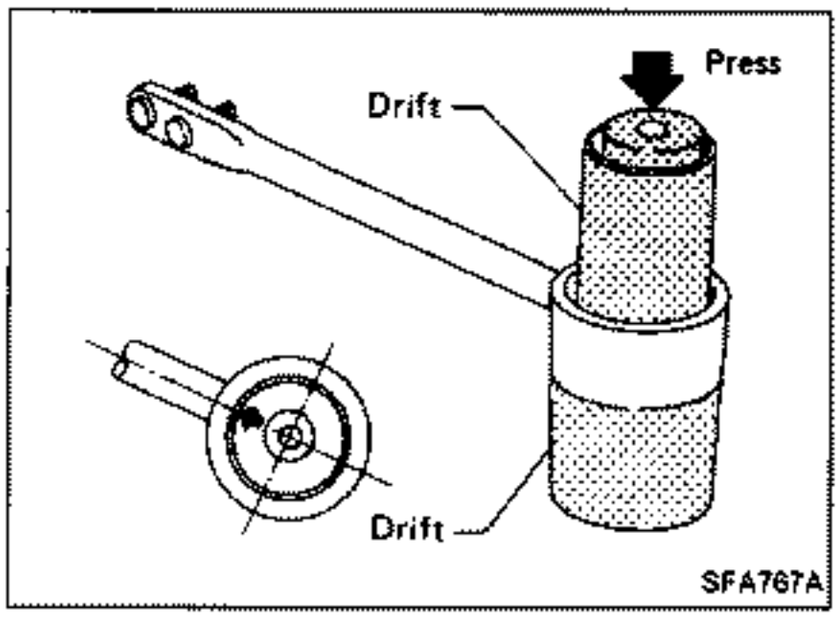

- When removing tension rod bushing, place one drift on lower side of bushing and the other on upper side, and press bushing out.
- Place arrow mark on bushing facing tension rod before installing bushing.

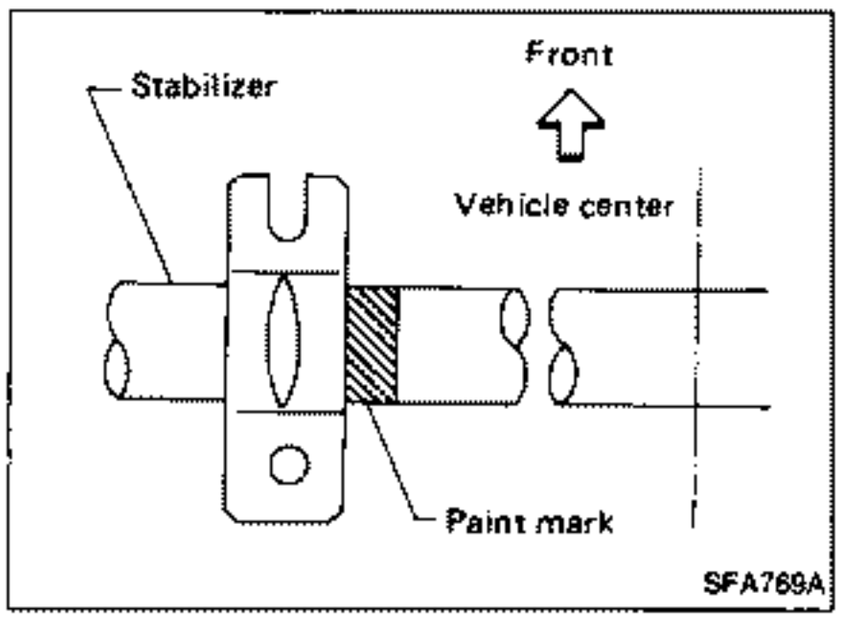

- When installing stabilizer, make sure that paint mark and clamp face in the correct direction.

General Specifications

COIL SPRING

Applied model		Australia	Europe
		VG30DE	VG30DETT
Wire diameter	mm (in)	12.0 (0.472)	
Coil diameter	mm (in)	100 (3.94)	
Free length	mm (in)	370 (14.57)	390 (15.35)
Spring constant	N/mm (kg/mm, lb/in)	27.5 (2.8, 157)	25.5 (2.6, 146)
Identification color		Blue x 2	L.H.: Orange x 1, Purple x 1 R.H.: White x 1, Purple x 1

SHOCK ABSORBER

Applied model		Australia	Europe
		VG30DE	VG30DETT
Damping force [at 0.3 m (1.0 ft)/sec.]	N (kg, lb)		
Expansion		1,177 - 1,569 (120 - 160, 265 - 353)	1,177 - 1,530 (120 - 156, 265 - 344)
Compression		559 - 814 (57 - 83, 126 - 183)	539 - 755 (55 - 77, 121 - 170)
Piston rod diameter	mm (in)	12.5 (0.492)	

FRONT STABILIZER BAR

Applied model	Australia	Europe
	VG30DE	VG30DETT
Stabilizer diameter mm (in)	28.6 (1.126)	27.2 (1.071)
Identification color	Purple	White

TENSION ROD

Applied model		All
Rod diameter	mm (in)	20.0 (0.787)

Inspection and Adjustment

WHEEL ALIGNMENT (Unladen*1)

Camber	degree	−1°35′ to −0°05′
Caster	degree	9°00′ - 10°30′
Toe-in (Total)		
	mm (in)	0 - 2 (0 - 0.08)
	degree	0′ - 11′
Kingpin inclination	degree	12°10′ - 13°40′
Front wheel turning angle		
Full turn*2	degree	
Inside		32° - 36°
Outside		27° - 31°

*1: Fuel, radiator coolant and engine oil full. Spare tire, jack, hand tools and mats in designated positions.

*2: On power steering models, wheel turning force (at circumference of steering wheel) of 98 to 147 N (10 to 15 kg, 22 to 33 lb) with engine idle.

WHEEL BEARING

Wheel bearing axial end play mm (in)	0.05 (0.0020) or less
Wheel bearing lock nut	
Tightening torque N·m (kg-m, ft-lb)	206 - 284 (21 - 29, 152 - 210)
Wheel bearing turning resistance N·m (kg-cm, in-lb)	
NSK bearing	0.34 - 2.16 (3.5 - 22.0, 3.0 - 19.1)
NTN bearing	0.44 - 3.33 (4.5 - 34.0, 3.9 - 29.5)
At wheel hub bolt N (kg, lb)	
NSK bearing	5.9 - 37.3 (0.6 - 3.8, 1.3 - 8.4)
NTN bearing	7.8 - 57.9 (0.8 - 5.9, 1.8 - 13.0)

LOWER BALL JOINT

Swing force (Measuring point: cotter pin hole of ball stud) N (kg, lb)	7.8 - 53.0 (0.8 - 5.4, 1.8 - 11.9)
Turning torque N·m (kg-cm, in-lb)	0.49 - 3.43 (5.0 - 35, 4.3 - 30.4)
Vertical end play mm (in)	0 (0)

WHEEL RUNOUT (Radial and lateral)

Unit: mm (in)

Wheel type	Aluminum wheel
Radial runout limit	0.3 (0.012)
Lateral runout limit	

BRAKE SYSTEM

SECTION BR

CONTENTS

PRECAUTIONS AND PREPARATION ..... BR- 2
CHECK AND ADJUSTMENT ..... BR- 3
BRAKE HYDRAULIC LINE ..... BR- 4
BRAKE PEDAL AND BRACKET ..... BR- 6
BRAKE BOOSTER ..... BR- 8
VACUUM PIPING ..... BR- 9
MASTER CYLINDER BR-11
FRONT DISC BRAKE (OPZ25V and OPF25V) — Caliper BR-12
FRONT DISC BRAKE (OPZ25V and OPF25V) — Rotor BR-15
REAR DISC BRAKE — Caliper BR-16
REAR DISC BRAKE — Rotor BR-20
PARKING BRAKE CONTROL BR-21
PARKING DRUM BRAKE BR-23
ANTI-LOCK BRAKING SYSTEM BR-25
TROUBLE DIAGNOSES BR-30
SERVICE DATA AND SPECIFICATIONS (S.D.S.) BR-55

Precautions

- Recommended fluid is brake fluid "DOT 3".
- Never reuse drained brake fluid.
- Be careful not to splash brake fluid on painted areas.
- To clean or wash all parts of master cylinder, disc brake caliper and wheel cylinder, use clean brake fluid.
- Never use mineral oils such as gasoline or kerosene. They will ruin rubber parts of hydraulic system.

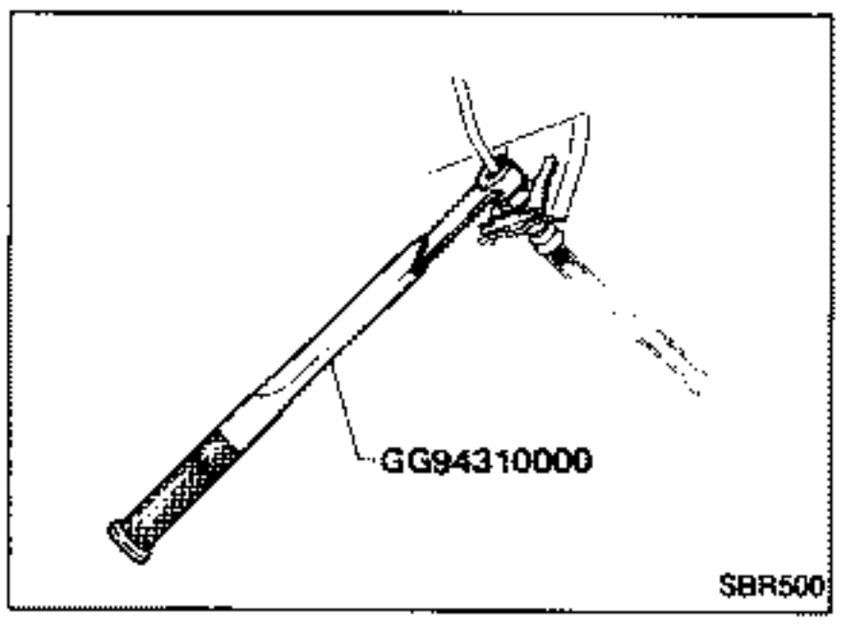

- Use Tool when removing and installing brake tube.

WARNING:

- Clean brake pads and shoes with a waste cloth, then collect dust with a dust collector.

Preparation

SPECIAL SERVICE TOOLS

Tool number Tool name	Description	
GG94310000 Flare nut torque wrench		Removing and installing each brake piping
KV991V0010 Brake fluid pressure gauge	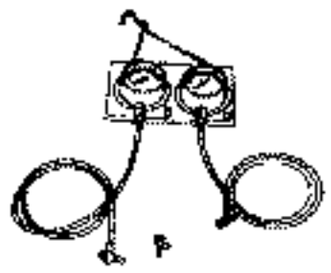	Measuring brake fluid pressure
KV999P1000 A.B.S. checker	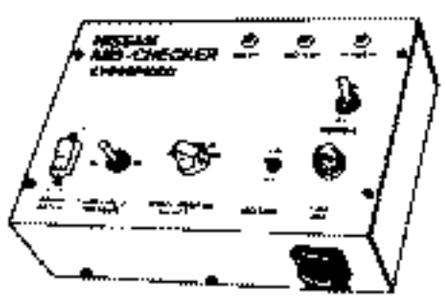	Checking brake fluid pressure of A.B.S. actuator
KV999P1020 A.B.S. checker adapter harness	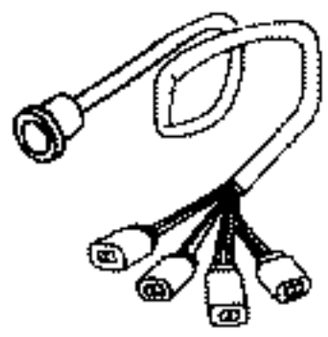	Checking brake fluid pressure of A.B.S. actuator

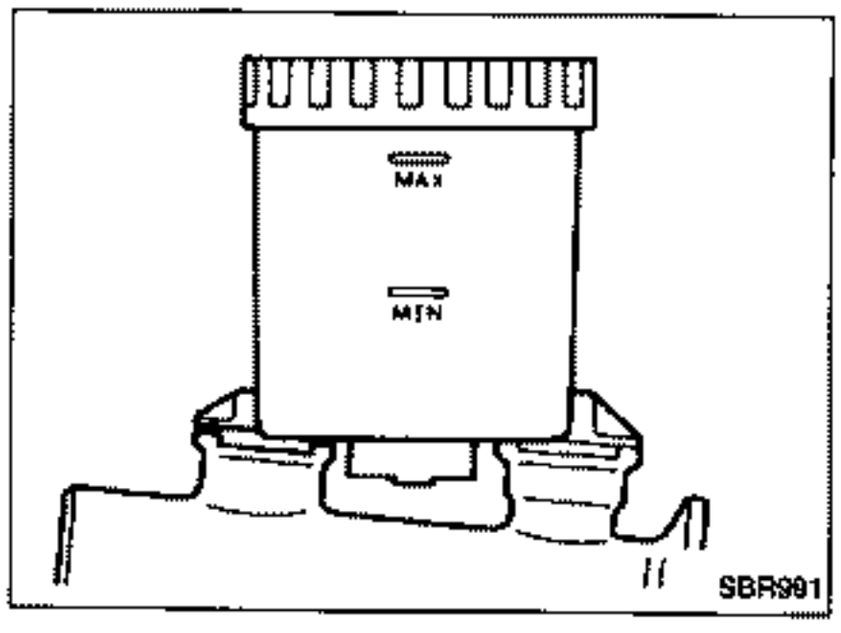

Checking Brake Fluid Level

- Check fluid level in reservoir tank. It should be between Max. and Min. lines on reservoir tank.
- If fluid level is extremely low, check brake system for leaks.

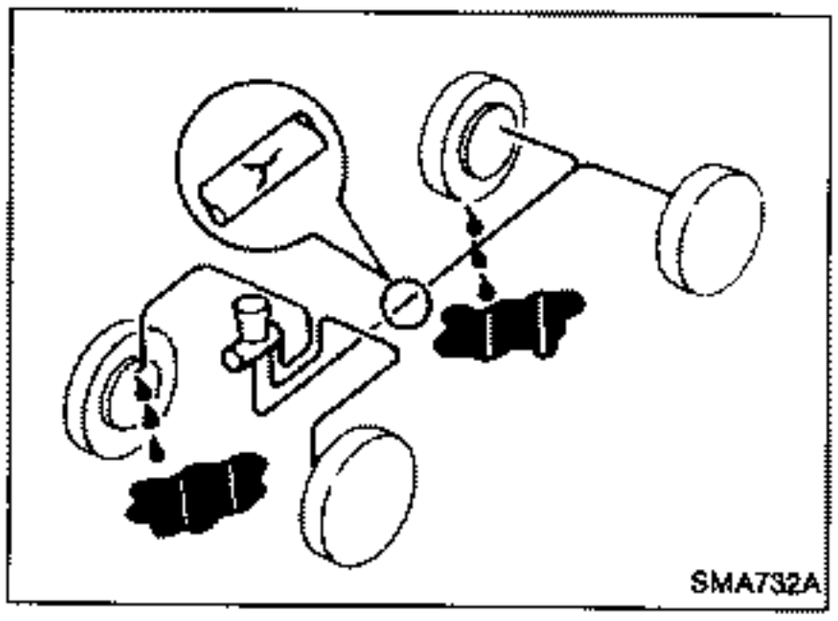

Checking Brake System

- Check brake lines (lines and flexible hoses) for cracks, deterioration or other damage. Replace any damaged parts.
  If leakage occurs around joints, retighten or, if necessary, replace damaged parts.
- Check for oil leakage by fully depressing brake pedal.

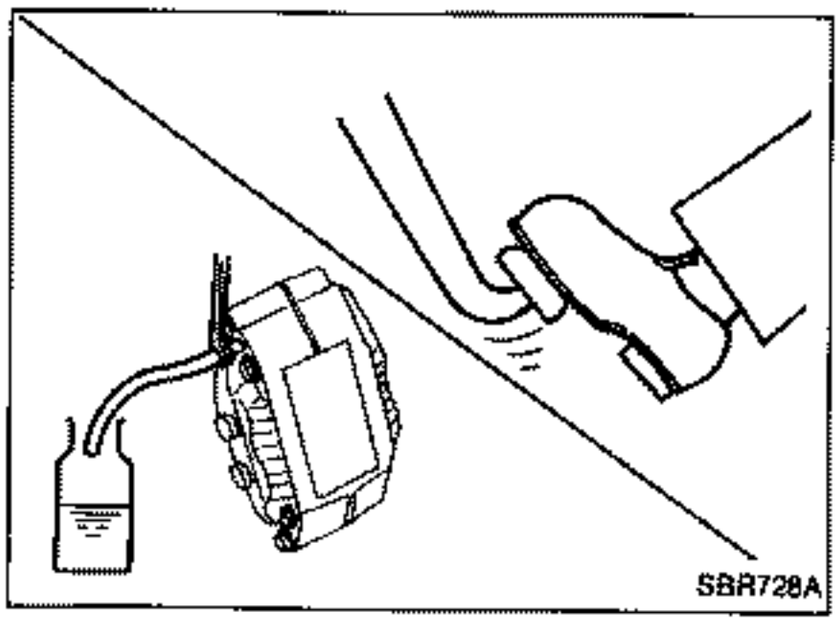

Changing Brake Fluid

1. Drain brake fluid in each air bleeder valve.
2. Refill until new brake fluid comes out of each air bleeder valve.
   Use same procedure as in bleeding hydraulic system to refill brake fluid.
   Refer to Bleeding Procedure.

- **Refill with recommended brake fluid "DOT 3".**
- **Never reuse drained brake fluid.**
- **Be careful not to splash brake fluid on painted areas.**

Models with A.B.S.

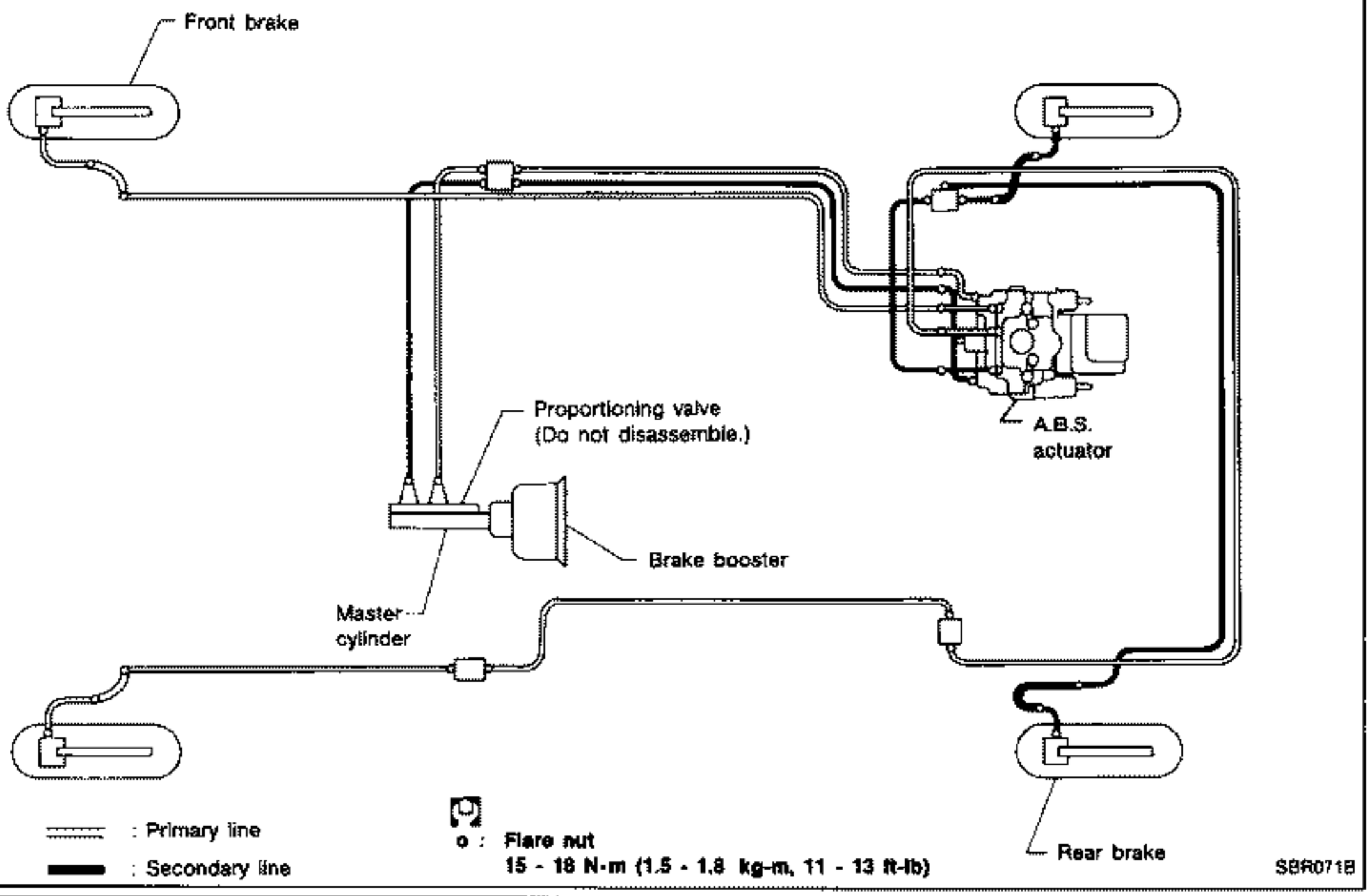

Models without A.B.S.

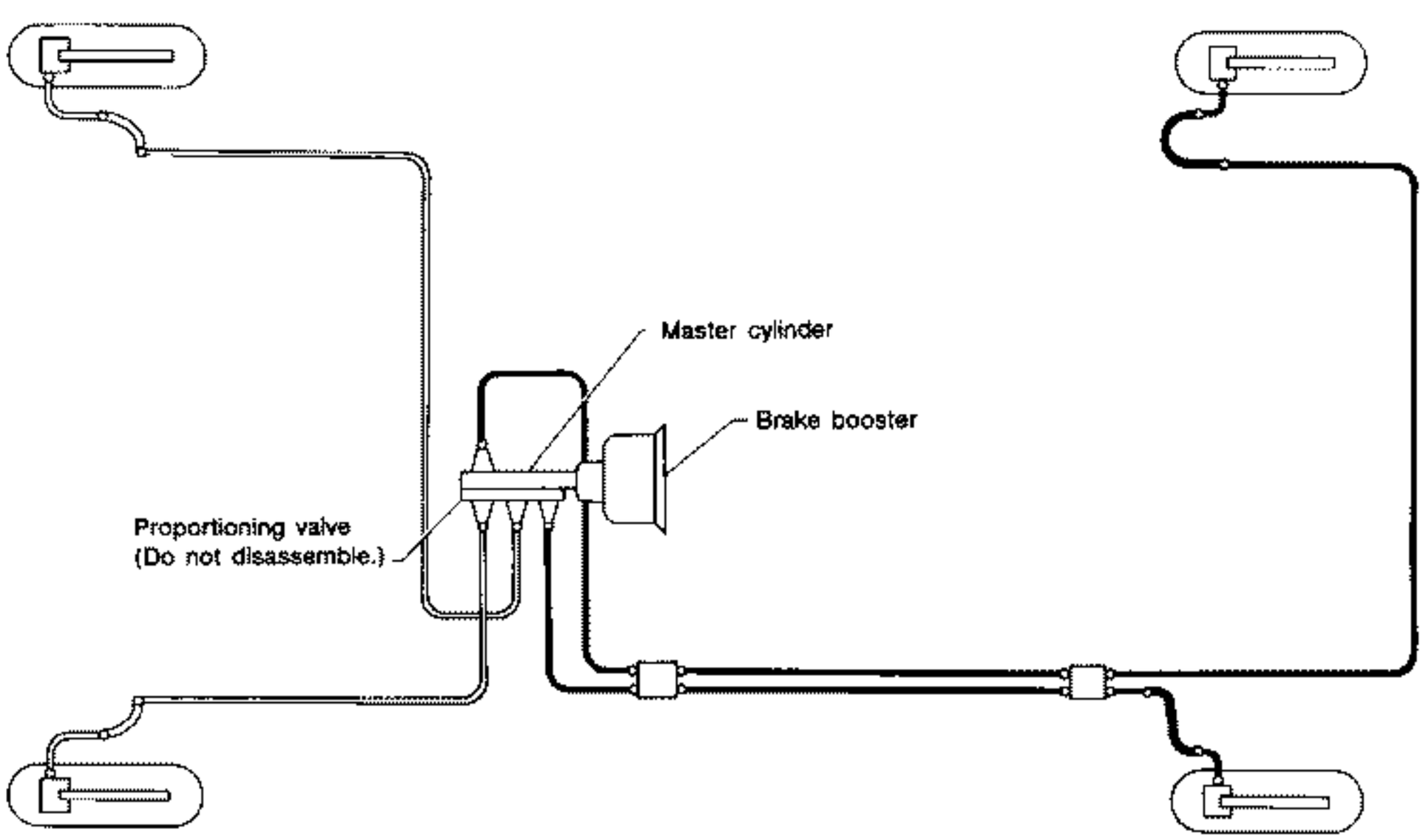

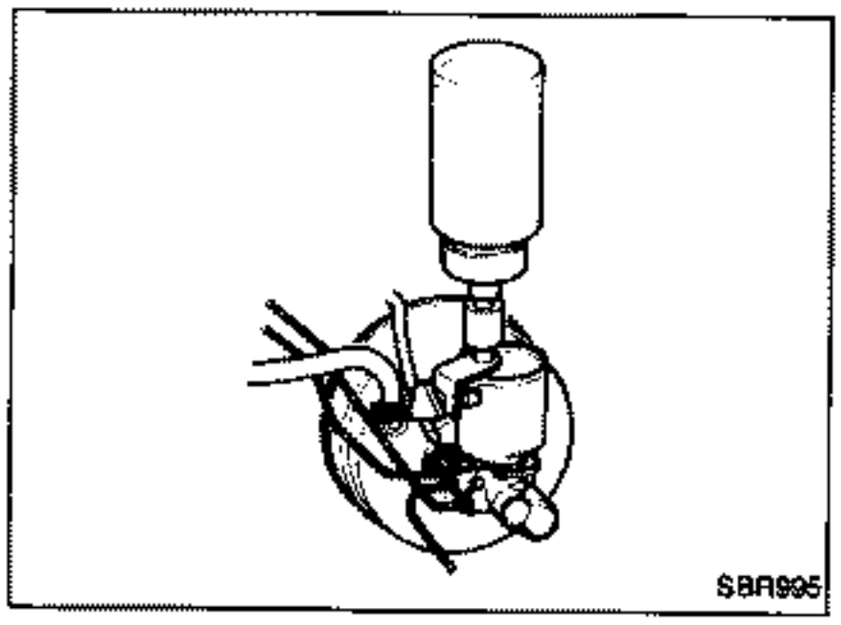
SBR995

Bleeding Procedure

CAUTION:

- **Carefully monitor brake fluid level at master cylinder during bleeding operation.**
- **Fill reservoir with recommended brake fluid. Make sure it is full at all times while bleeding air out of system.**
- **Place a container beneath master cylinder to avoid spillage of brake fluid.**

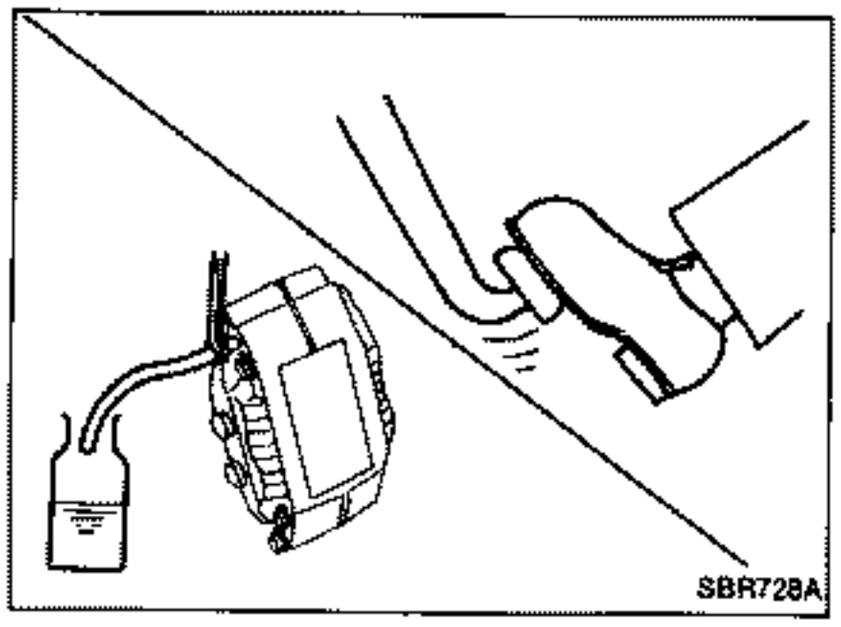
SBR728A

- Bleed air according to the following procedure.
  Left rear caliper
  ↓
  Right rear caliper
  ↓
  Left front caliper
  ↓
  Right front caliper
  ↓
  Front side air bleeder on A.B.S. actuator (Models with A.B.S.)
  ↓
  Rear side air bleeder on A.B.S. actuator (Models with A.B.S.)
- **To bleed air out of lines, wheel cylinders and calipers, use the following procedure.**
  1) Connect a transparent vinyl tube to air bleeder valve.
  2) Fully depress brake pedal several times.
  3) With brake pedal depressed, open air bleeder valve to release air.
  4) Close air bleeder valve.
  5) Release brake pedal slowly.
  6) Repeat steps 2) through 5) until clear brake fluid comes out of air bleeder valve.

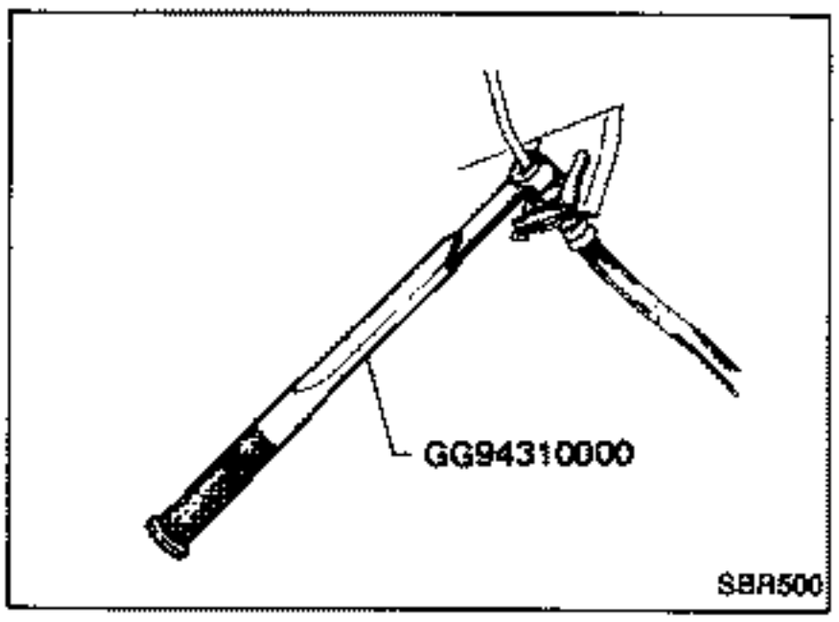

SBR500

Removal and Installation

1. To remove brake flexible hose, first remove flare nut securing brake line to hose, then withdraw lock spring.
2. Cover openings to prevent entrance of dirt whenever disconnecting hydraulic line.
3. All hoses must be free from excessive bending, twisting and pulling.
4. After installing brake lines, check for oil leakage by fully depressing brake pedal.

Inspection

Check brake lines (lines and flexible hoses) for cracks, deterioration or other damage. Replace any damaged parts.
If leakage occurs around joints, retighten or, if necessary, replace damaged parts.

Removal and Installation

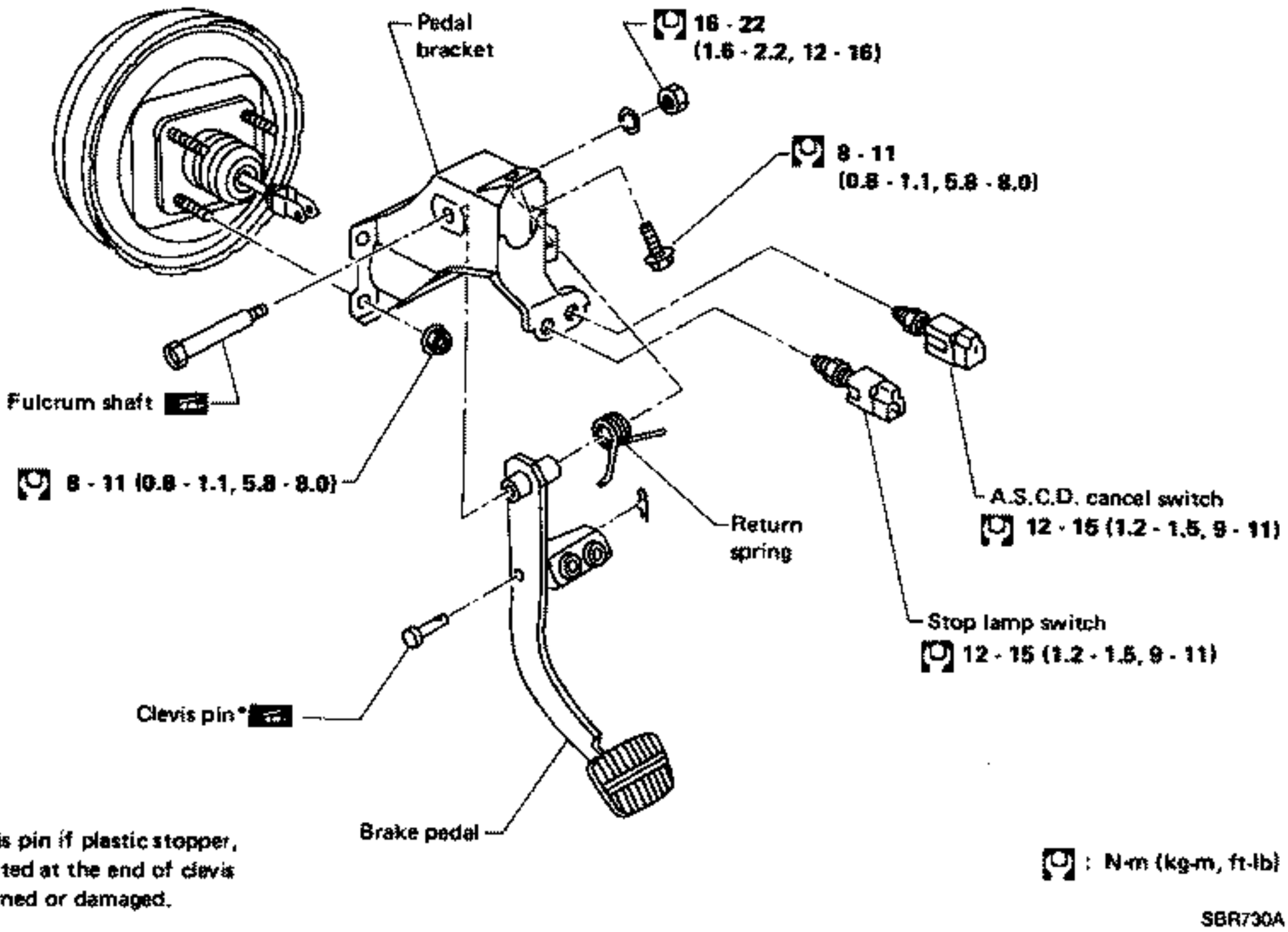

Inspection

Check brake pedal for following items.

- Brake pedal bend
- Clevis pin deformation
- Crack of any welded portion

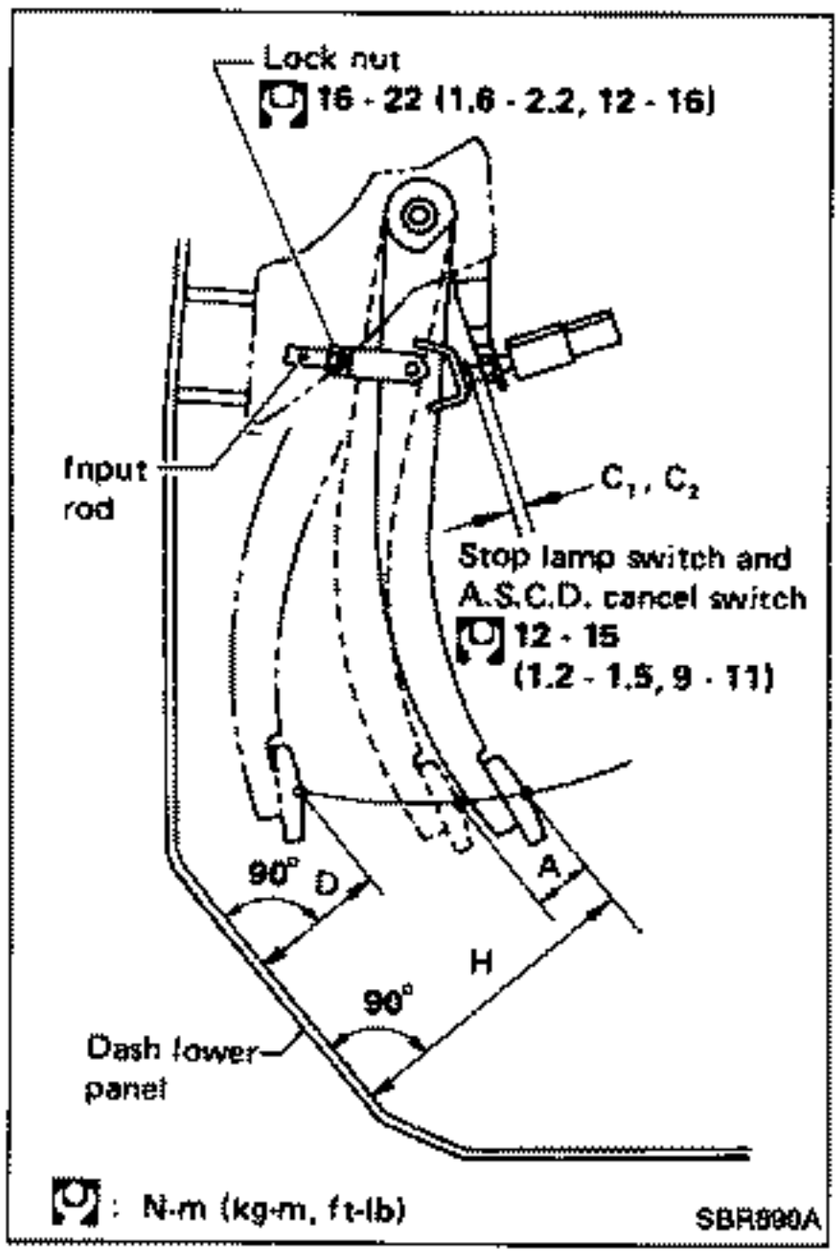

Adjustment

Check brake pedal free height from dash reinforcement panel. Adjust if necessary.

H: Free height
Refer to S.D.S.

D: Depressed height
Refer to S.D.S.
Under force of 490 N (50 kg, 110 lb) with engine running

C_1: Clearance between pedal stopper and threaded end of stop lamp switch
0.3 - 1.0 mm (0.012 - 0.039 in)

C_2: Clearance between pedal stopper and threaded end of A.S.C.D. switch
0.3 - 1.0 mm (0.012 - 0.039 in)

A: Pedal free play
1 - 3 mm (0.04 - 0.12 in)

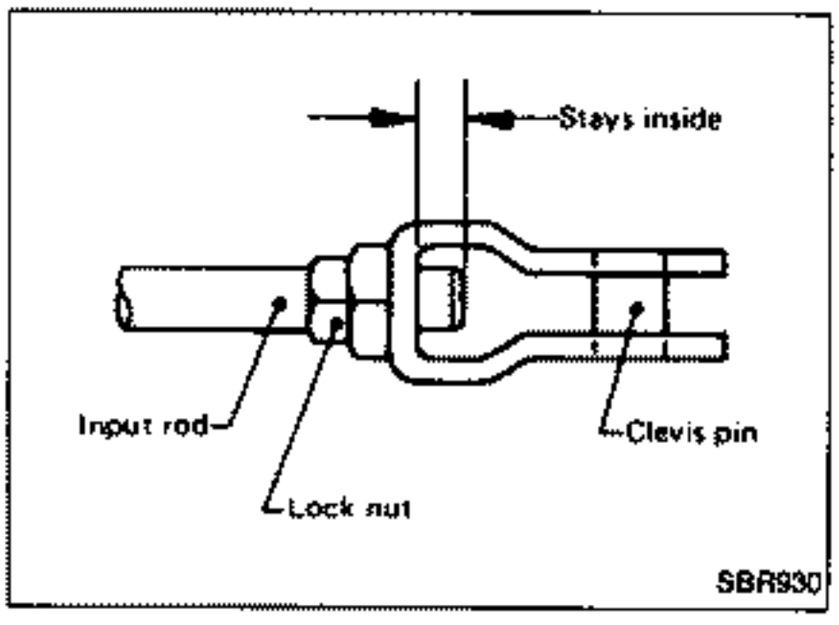

1. Adjust pedal free height with brake booster input rod. Then tighten lock nut.

Make sure that tip of input rod stays inside.

2. Adjust clearance "C_1" and "C_2" with stop lamp switch and A.S.C.D. switch respectively. Then tighten lock nuts.
3. Check pedal free play.

Make sure that stop lamp is off when pedal is released.

4. Check brake pedal's depressed height while engine is running.
   If depressed height is below specified value, check brake system for leaks, accumulation of air or any damage to components (master cylinder, wheel cylinder, etc.); then make necessary repairs.

Removal and Installation

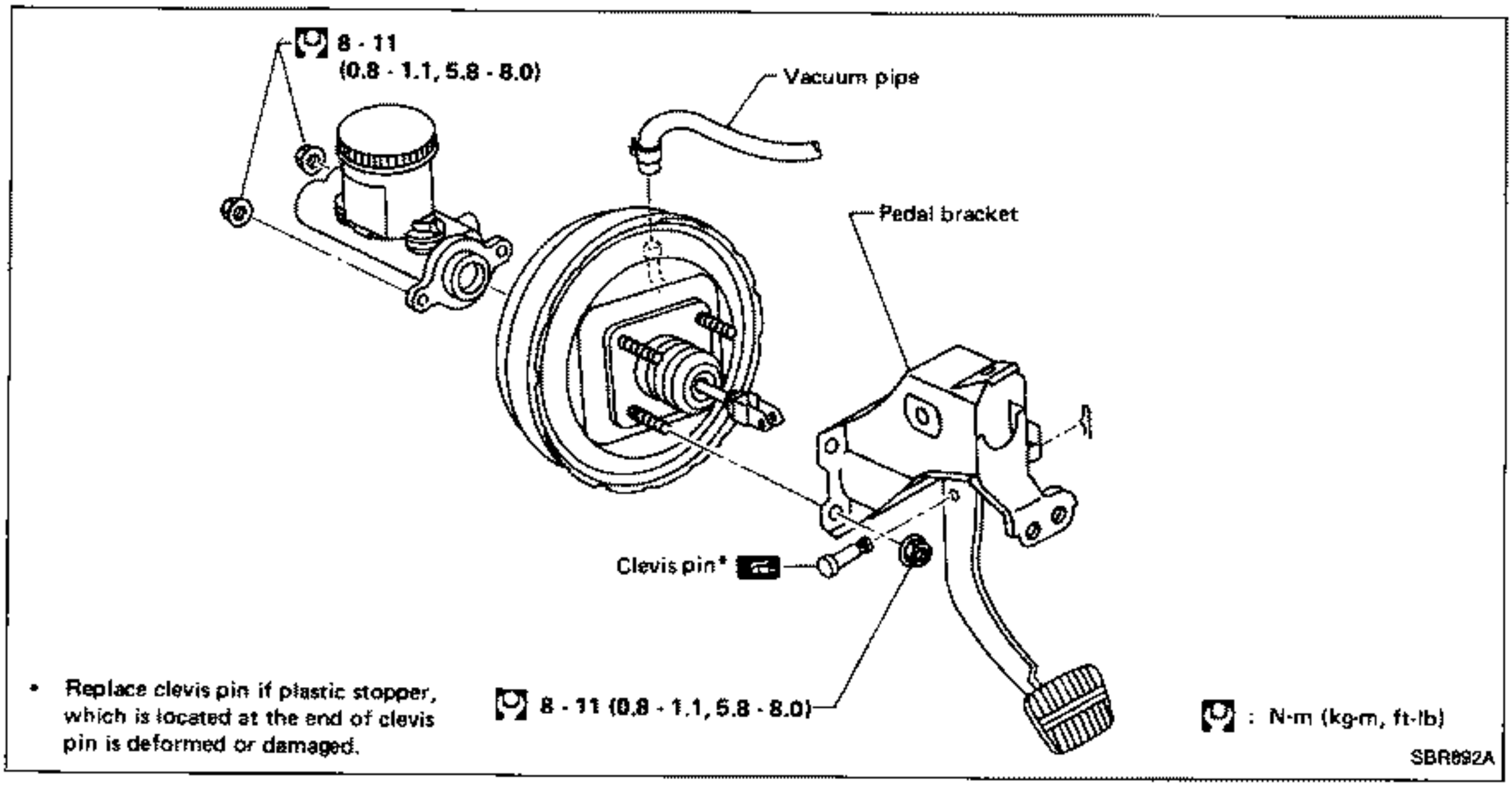

* Replace clevis pin if plastic stopper, which is located at the end of clevis pin is deformed or damaged.

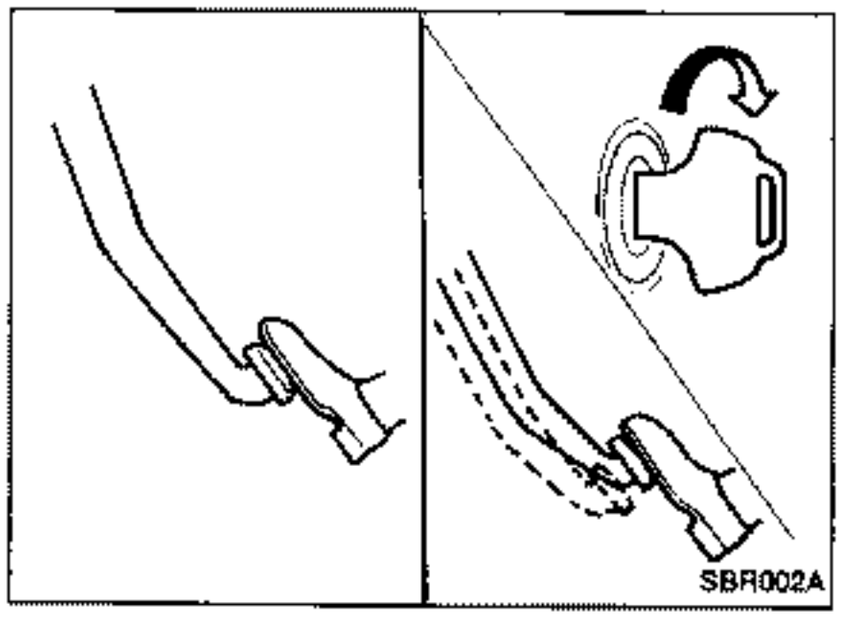

Inspection

OPERATING CHECK

- Depress brake pedal several times with engine off, and check that there is no change in pedal stroke.
- Depress brake pedal, then start engine. If pedal goes down slightly, operation is normal.

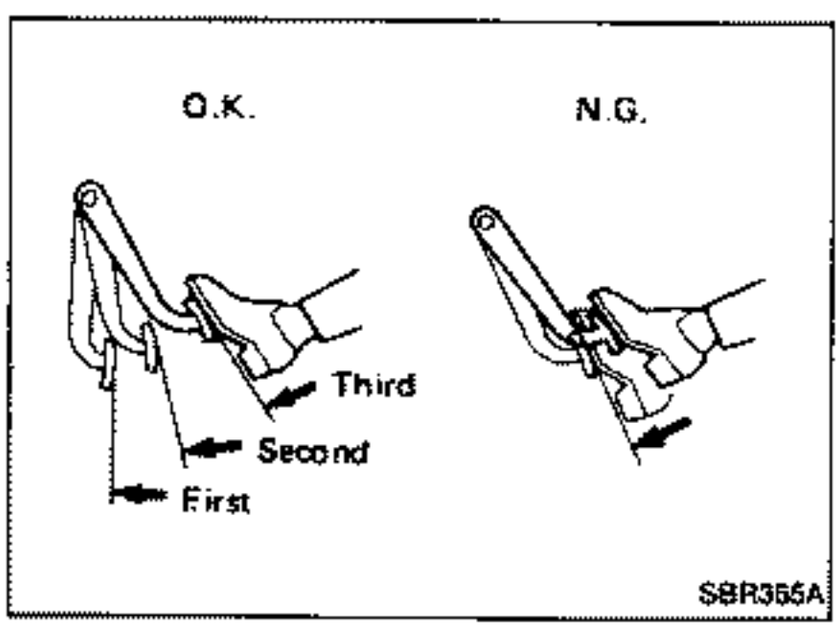

AIRTIGHT CHECK

- Start engine, and stop it after one or two minutes. Depress brake pedal several times slowly. If pedal goes further down the first time and gradually rises after second or third time, booster is airtight.
- Depress brake pedal while engine is running, and stop engine with pedal depressed. If there is no change in pedal stroke after holding pedal down **30 seconds**, brake booster is airtight.

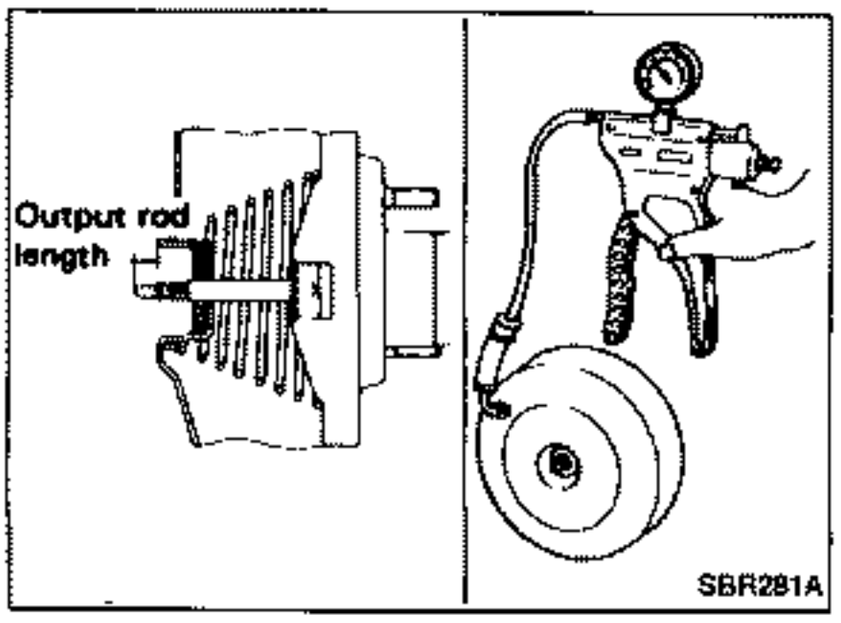

OUTPUT ROD LENGTH CHECK

1. Supply brake booster with vacuum of –66.7 kPa (–667 mbar, –500 mmHg, –19.69 inHg) using a handy vacuum pump.
2. Check output rod length.
   Specified length:
   10.275 - 10.525 mm (0.4045 - 0.4144 in)

Removal and Installation

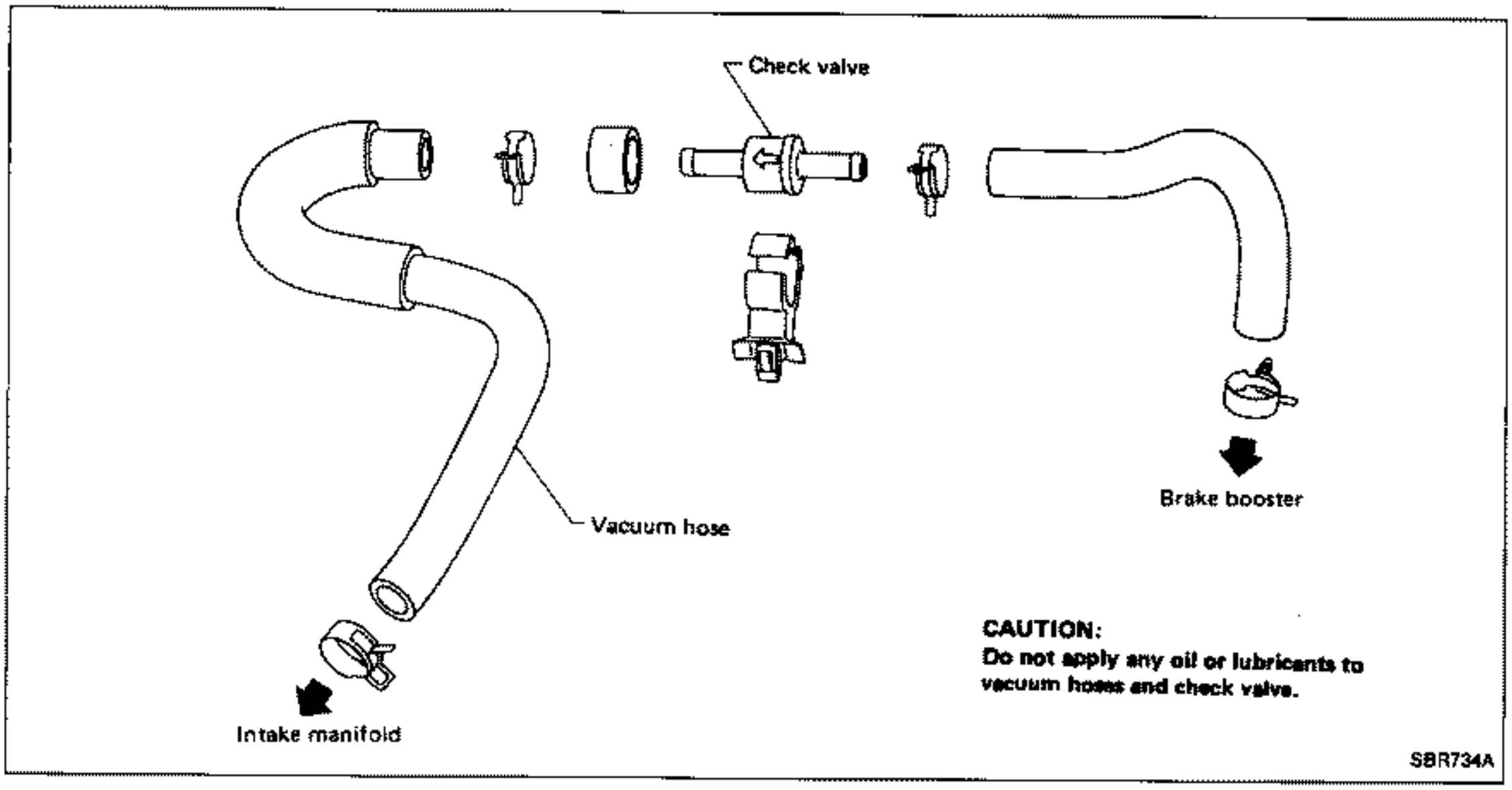

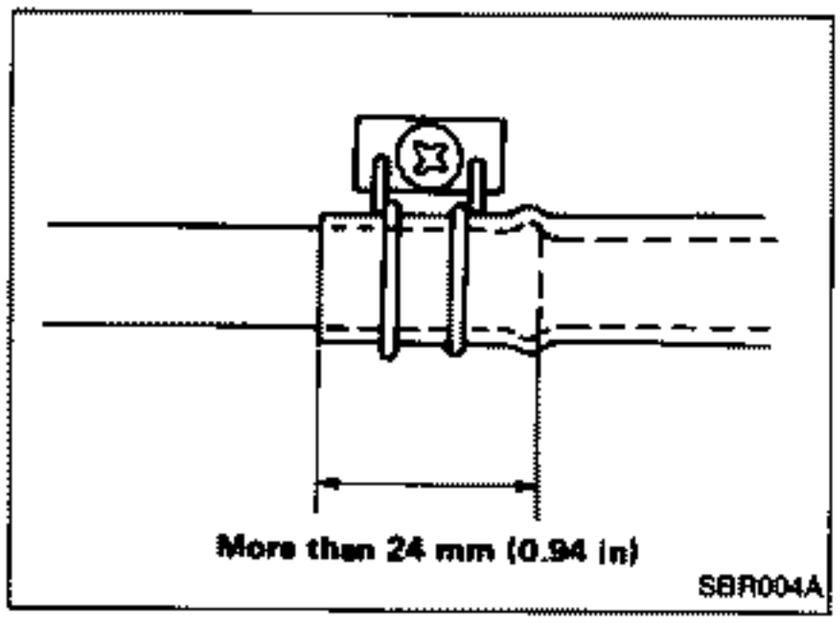

- Insert vacuum tube into vacuum hose more than 24 mm (0.94 in).

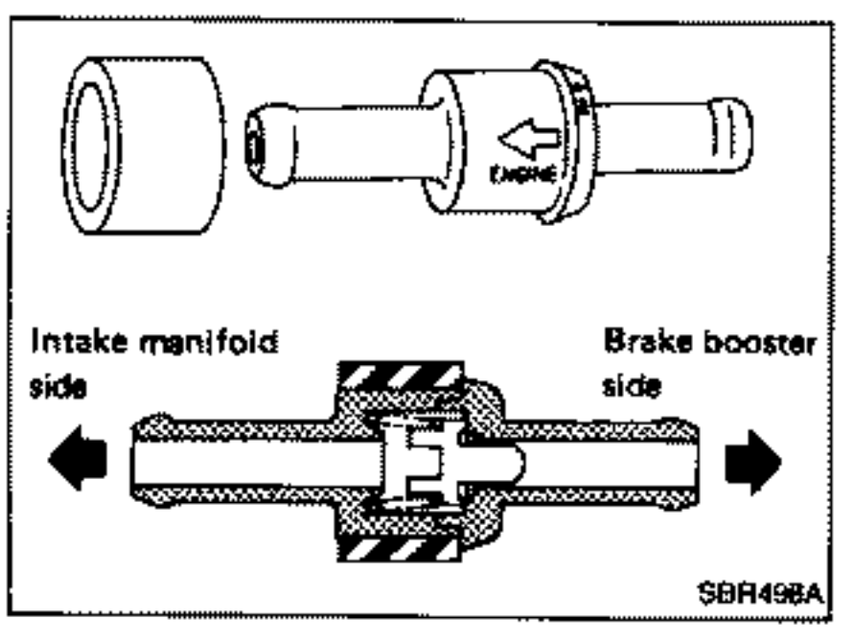

- Install check valve, paying attention to its direction.

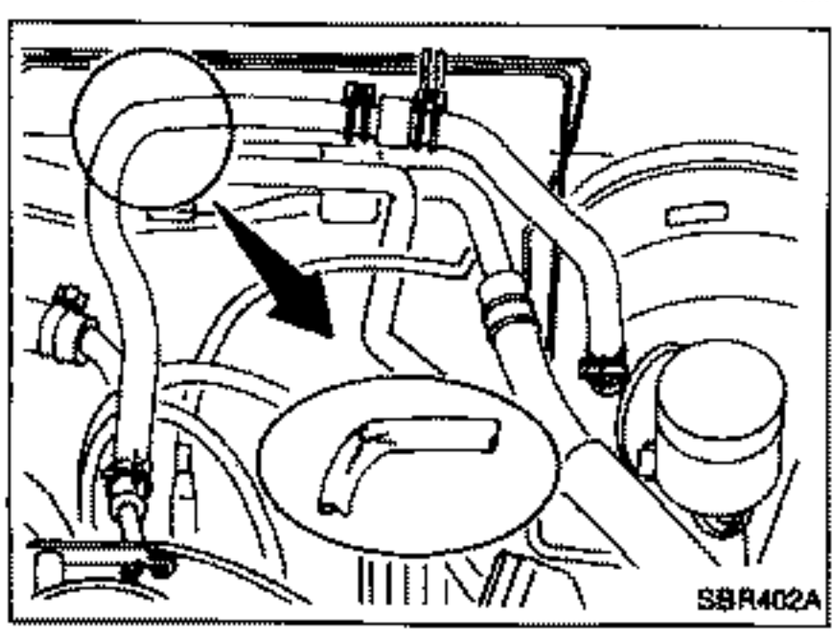

Inspection

HOSES AND CONNECTORS

- Check vacuum lines, connections and check valve for airtightness, improper attachment chafing and deterioration.

Inspection (Cont'd)

CHECK VALVE

Check vacuum with a vacuum pump.

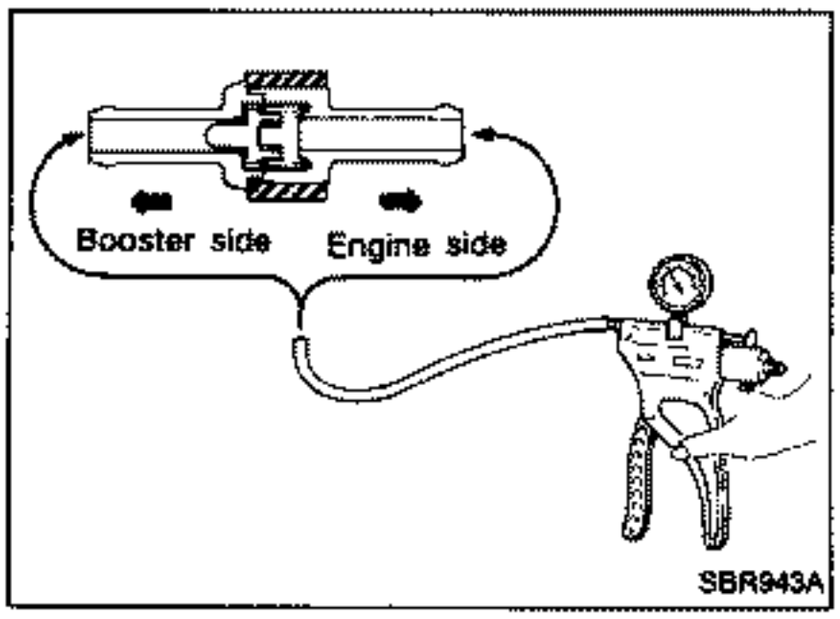

Connect to booster side	Vacuum should exist.
Connect to engine side	Vacuum should not exist.

Removal and Installation

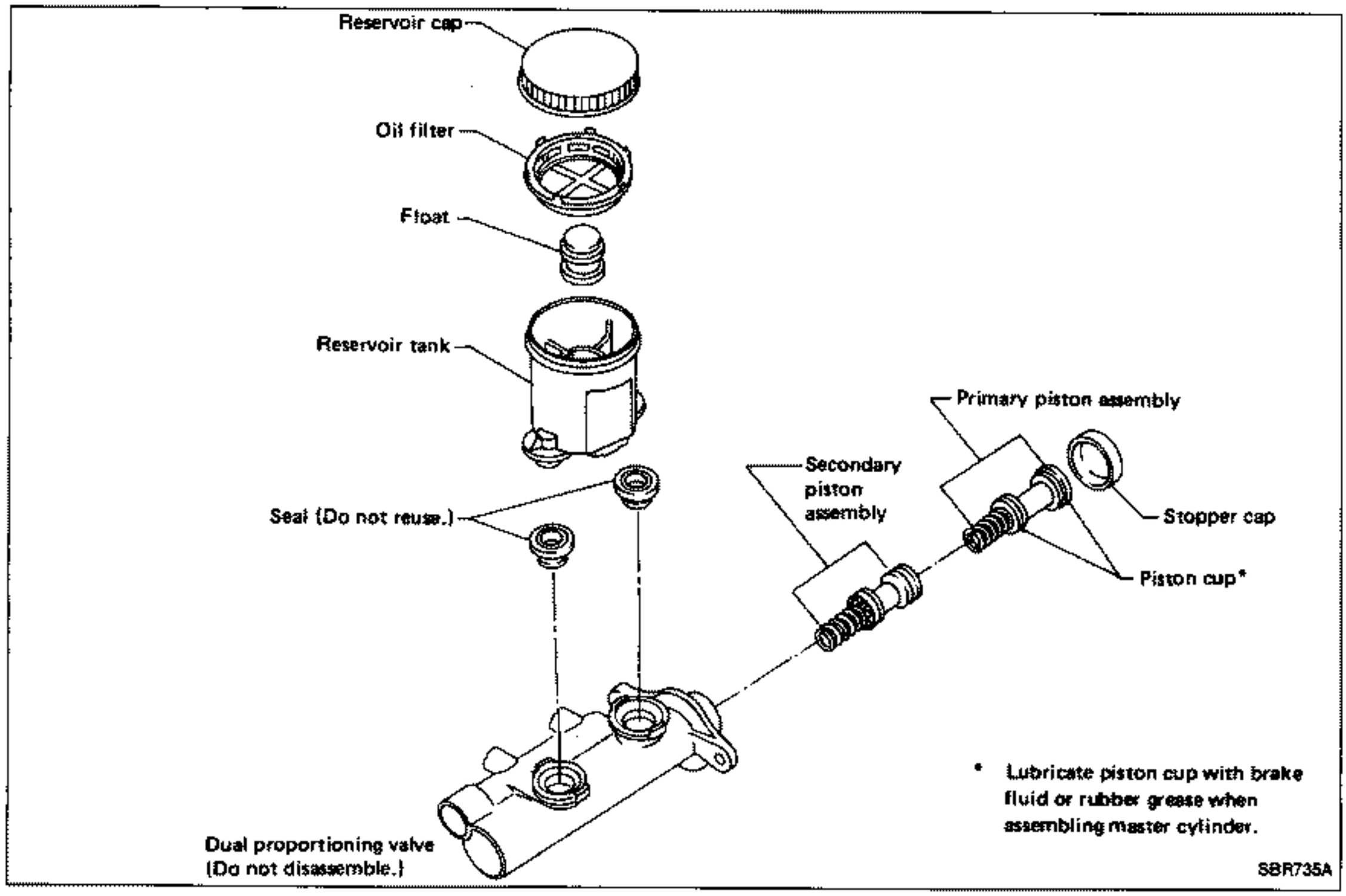

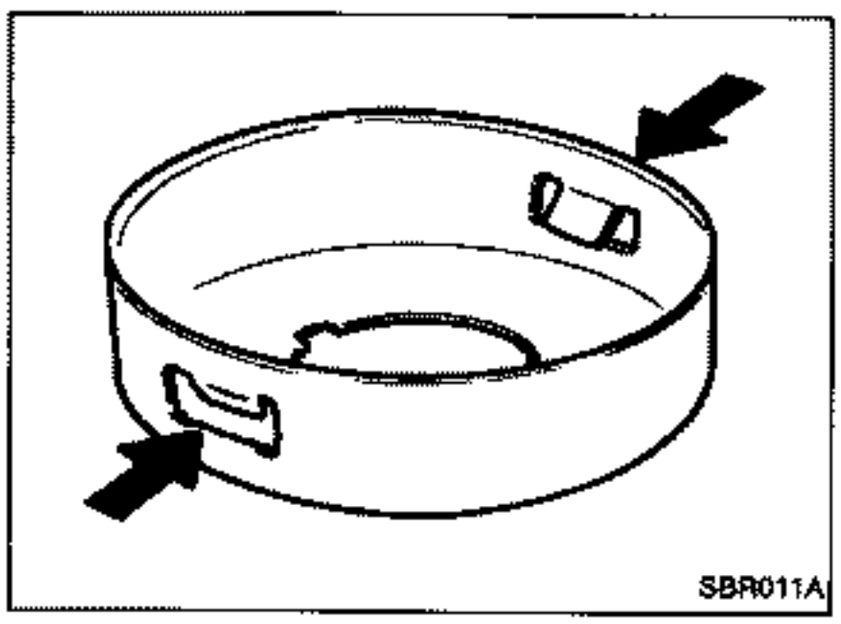

- Replace stopper cap if claw is damaged or deformed.
- Bend claws inward when installing stopper cap.

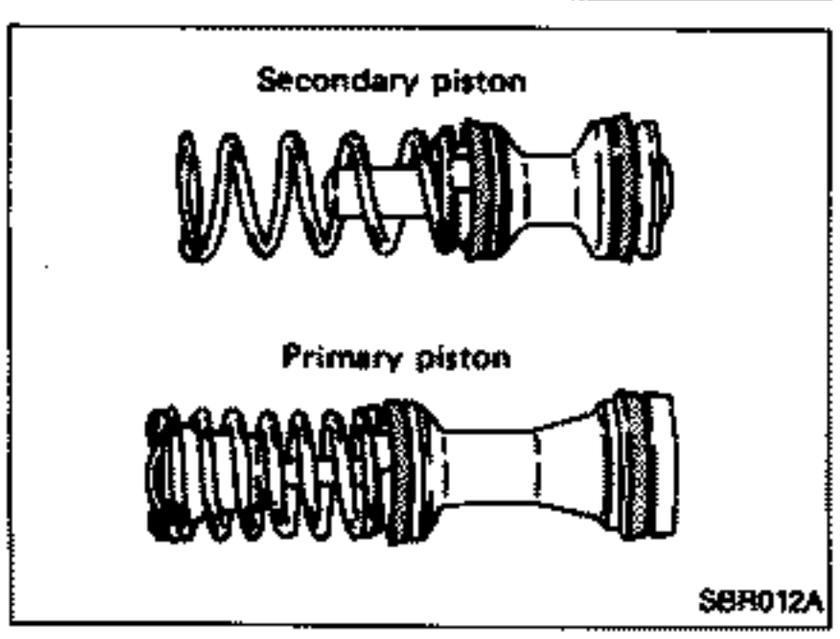

- Pay attention to direction of piston cups in figure at left.
- Check parts for wear or damage. Replace if necessary.

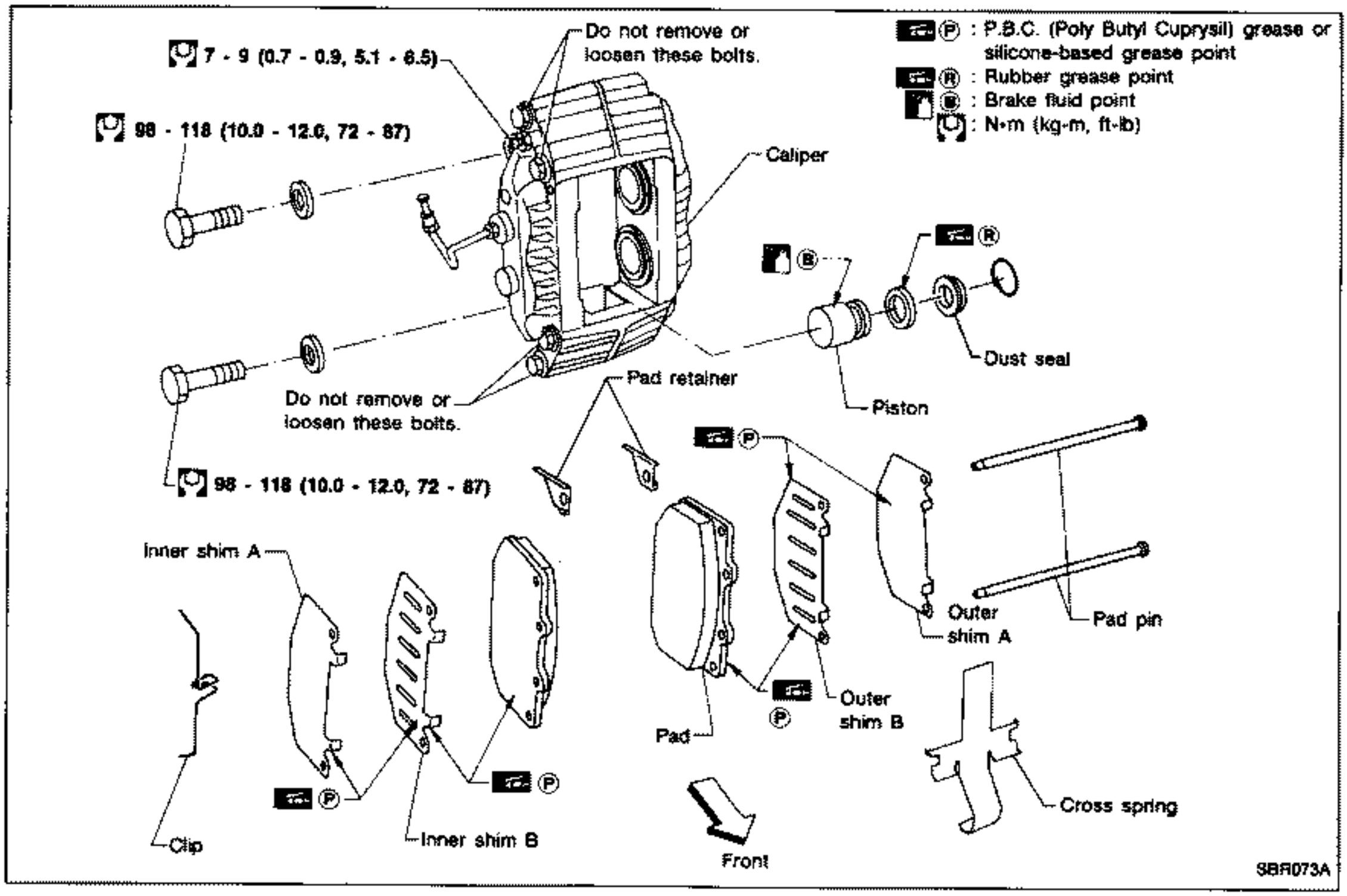

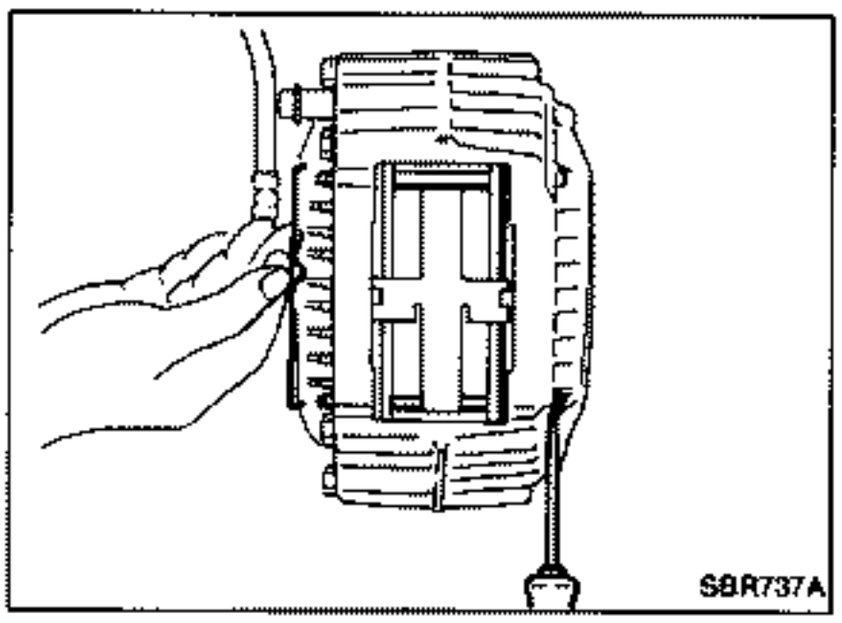

Pad Replacement

CAUTION:

- **When pads are removed, do not depress brake pedal because piston will pop out.**
- **Be careful not to damage dust seal or get oil on rotor. Always replace shims when replacing pads.**

1. Remove clip from pad pin and then remove pad pin.
2. Remove cross spring.

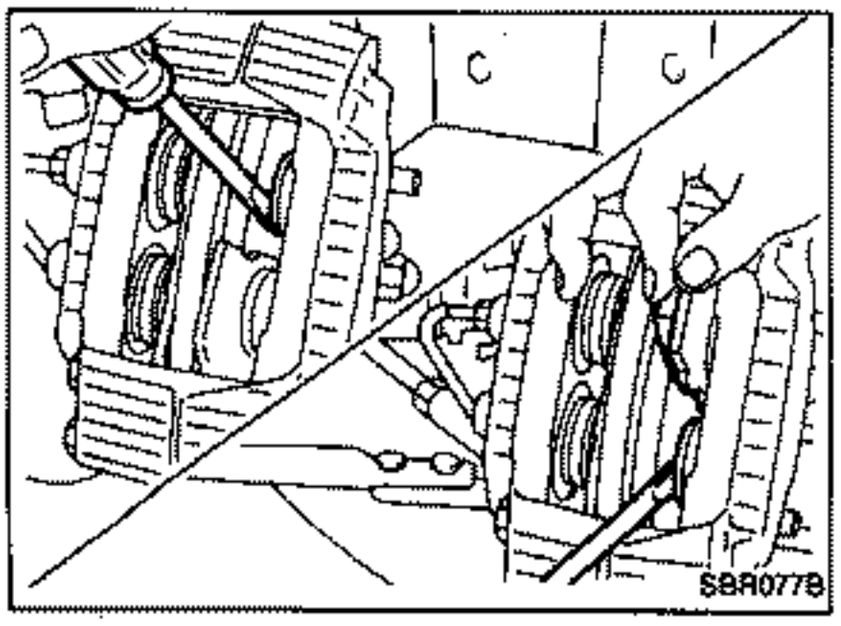

3. Pull out outer pad and insert it temporarily between lower piston and rotor as shown.
4. Push back upper piston with a suitable tool and insert new pad so it contacts upper piston as shown.
5. Pull out old pad.
6. Push back lower piston with a suitable tool.
7. Pull out new pad and reinstall it in the proper position.
8. Repeat step 3 to 7 for inner pad.
9. Install cross spring, pad pin and clip.

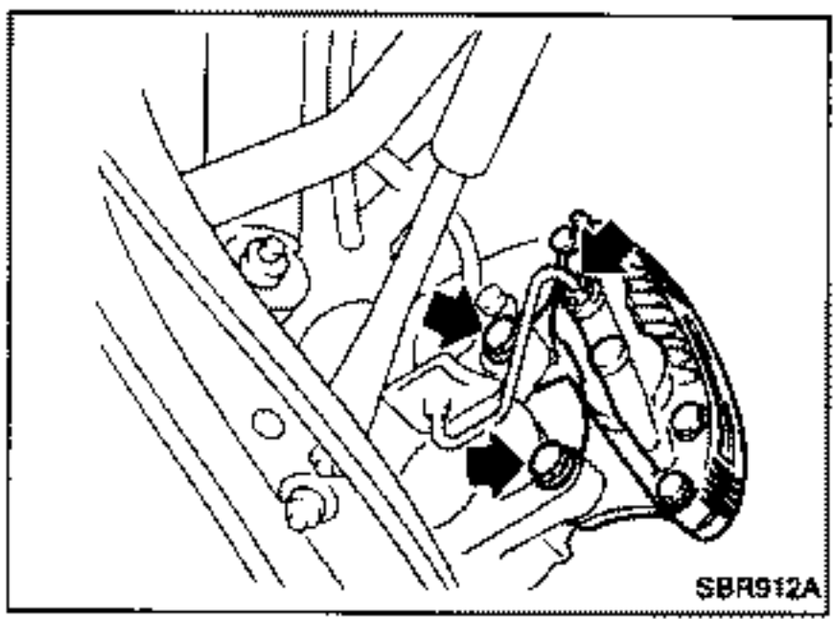

Removal and Installation

1. Disconnect brake tube.
2. Remove brake pad.
3. Remove brake caliper mounting bolts.

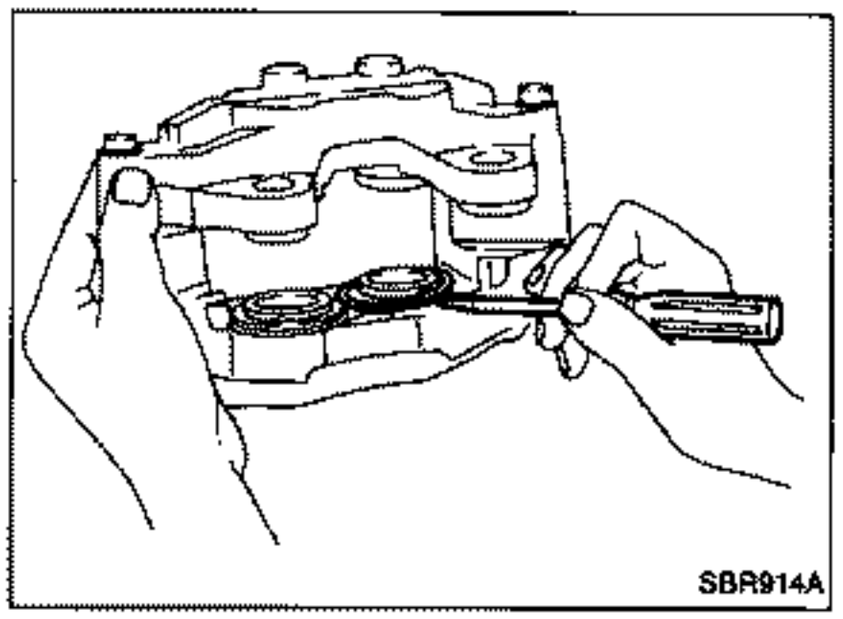

Disassembly

1. Remove retaining ring.

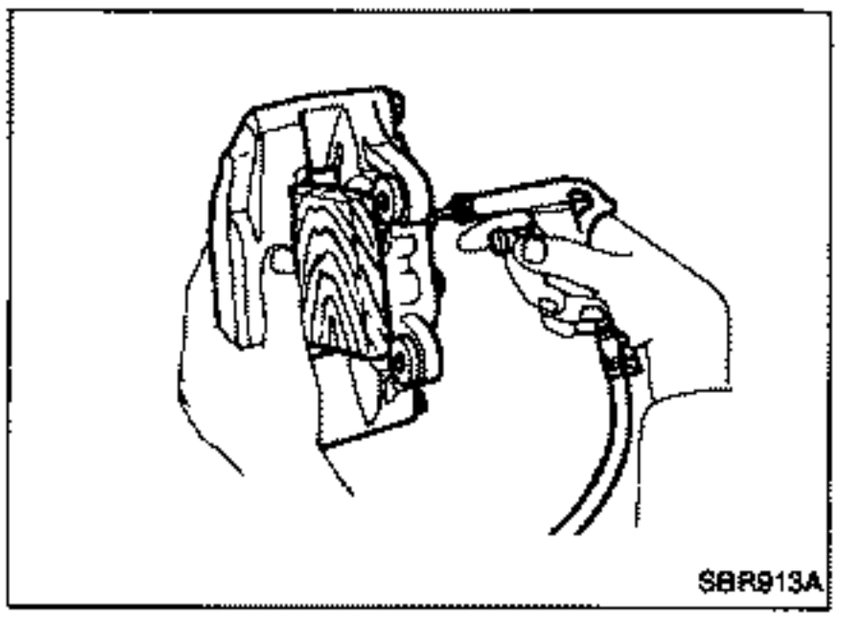

2. Push out piston with dust seal using compressed air.

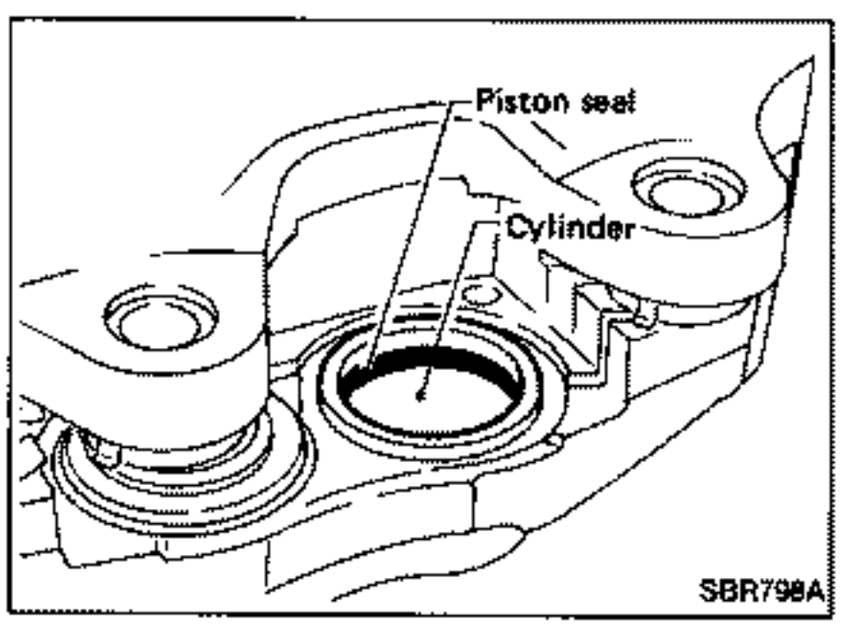

3. Remove piston seal.

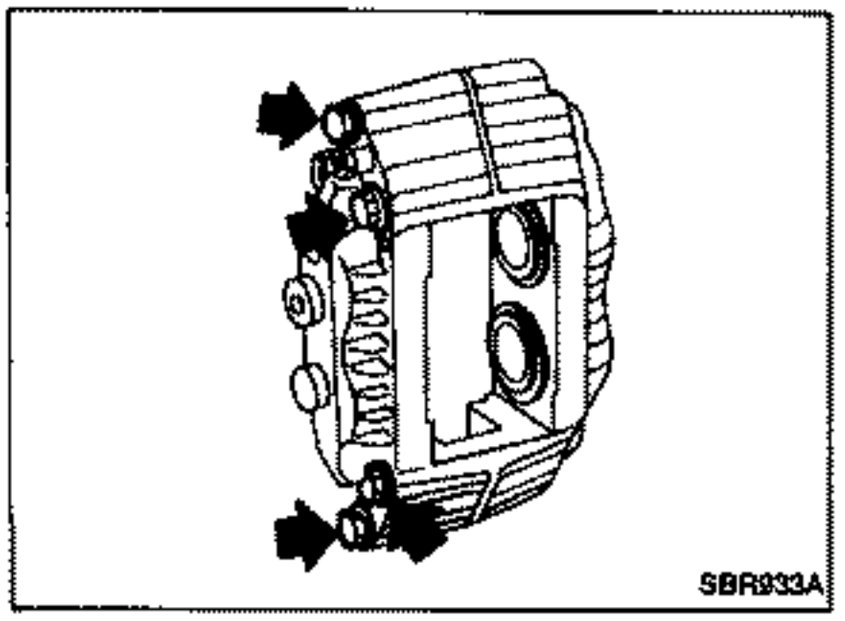

CAUTION:
Be careful not to loosen or remove bolts joining both sides of caliper.
If there is any fluid leakage, replace caliper assembly.

Inspection

CALIPER

- Check dust seals for damage.
- Check calipers for damage, rust or foreign materials.
- Check inside surface of cylinder for scoring, rust, wear, damage or foreign materials. Replace if any such condition exists.
- Eliminate minor damage from rust or foreign materials by polishing surface with fine emery paper.

CAUTION:
Use brake fluid to clean.

PISTON

Check piston for scoring, rust, wear, damage or foreign materials. Replace if any condition exists.

CAUTION:
Piston sliding surface is plated. Do not polish with emery paper even if rust or foreign materials are stuck to sliding surface.

PAD PIN AND CLIPS

Check for wear, cracks deformation, deterioration, rust or other damage. Replace if any such condition exists.

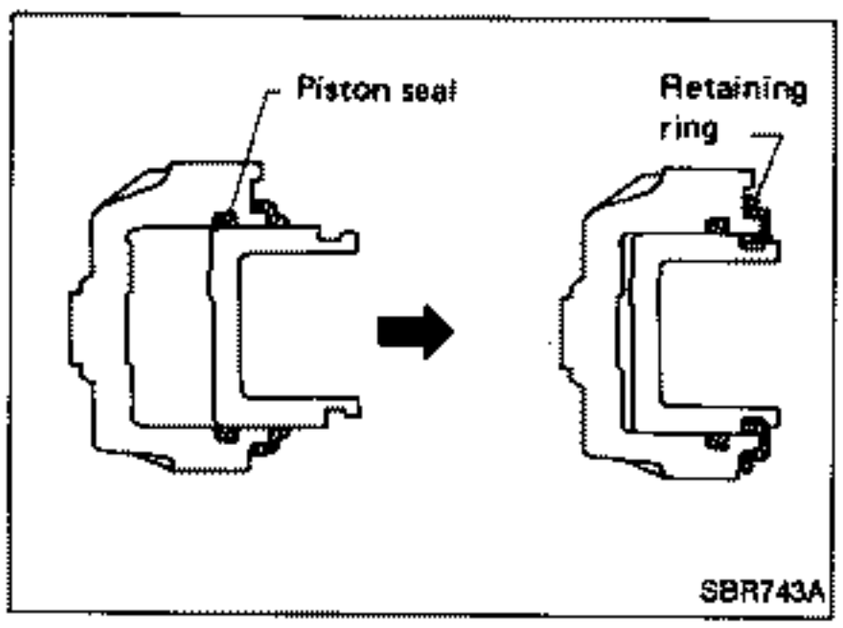

Assembly

1. Insert piston seal into groove on cylinder body.
2. With dust seal fitted to piston, install piston into cylinder body.
3. Secure dust seal properly.
4. Install retaining ring.

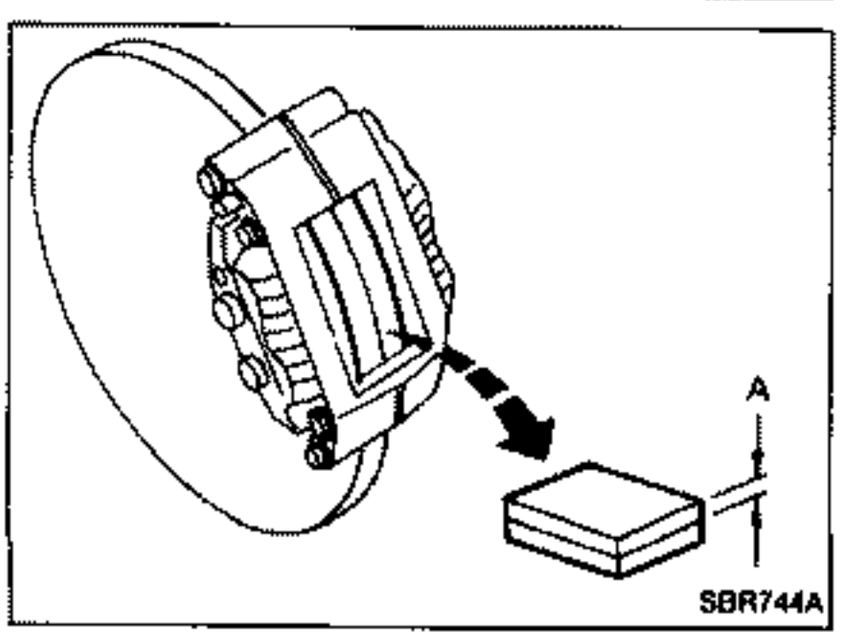

Inspection (On-vehicle)

DISC PAD

- Check pad shims for deformation or damage.
- Check disc pad for wear or damage.

Pad standard thickness (A):
10.0 mm (0.394 in)
Pad wear limit (A):
2.0 mm (0.079 in)

Inspection

RUBBING SURFACE

Check rotor for roughness, cracks or chips.

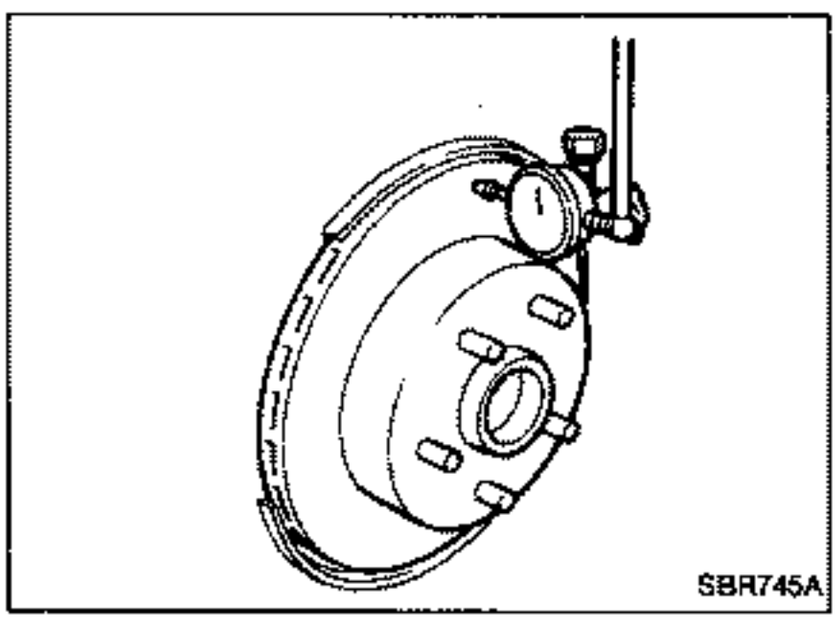

RUNOUT

Check runout using a dial indicator. Make sure that axial end play is within the specifications before measuring. Refer to section FA.

Rotor repair limit:
Maximum runout
(Total indicator reading at center of rotor pad contact surface)
0.07 mm (0.0028 in)

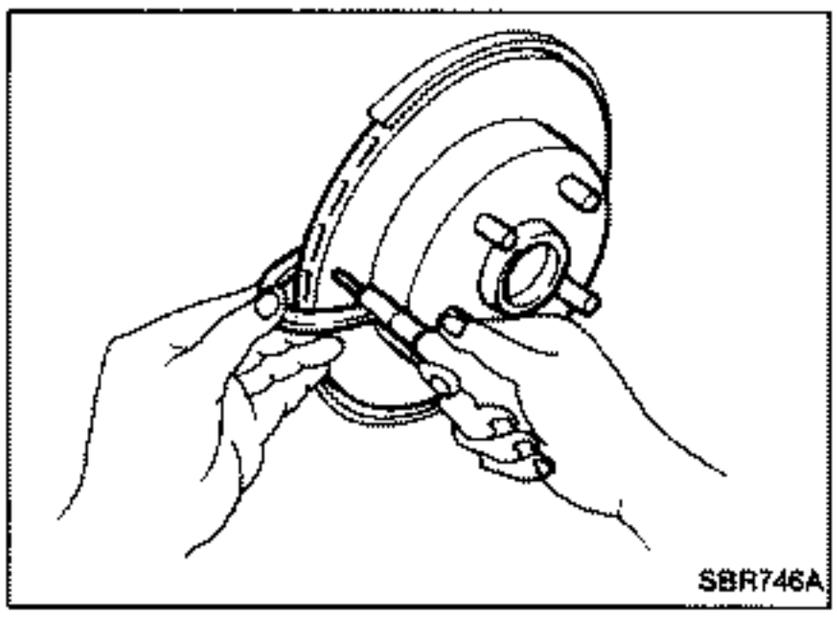

THICKNESS

Standard thickness:
OPZ25V
26.0 mm (1.024 in)
OPF25V
30.0 mm (1.181 in)
Minimum thickness:
OPZ25V
24.0 mm (0.945 in)
OPF25V
28.0 mm (1.102 in)

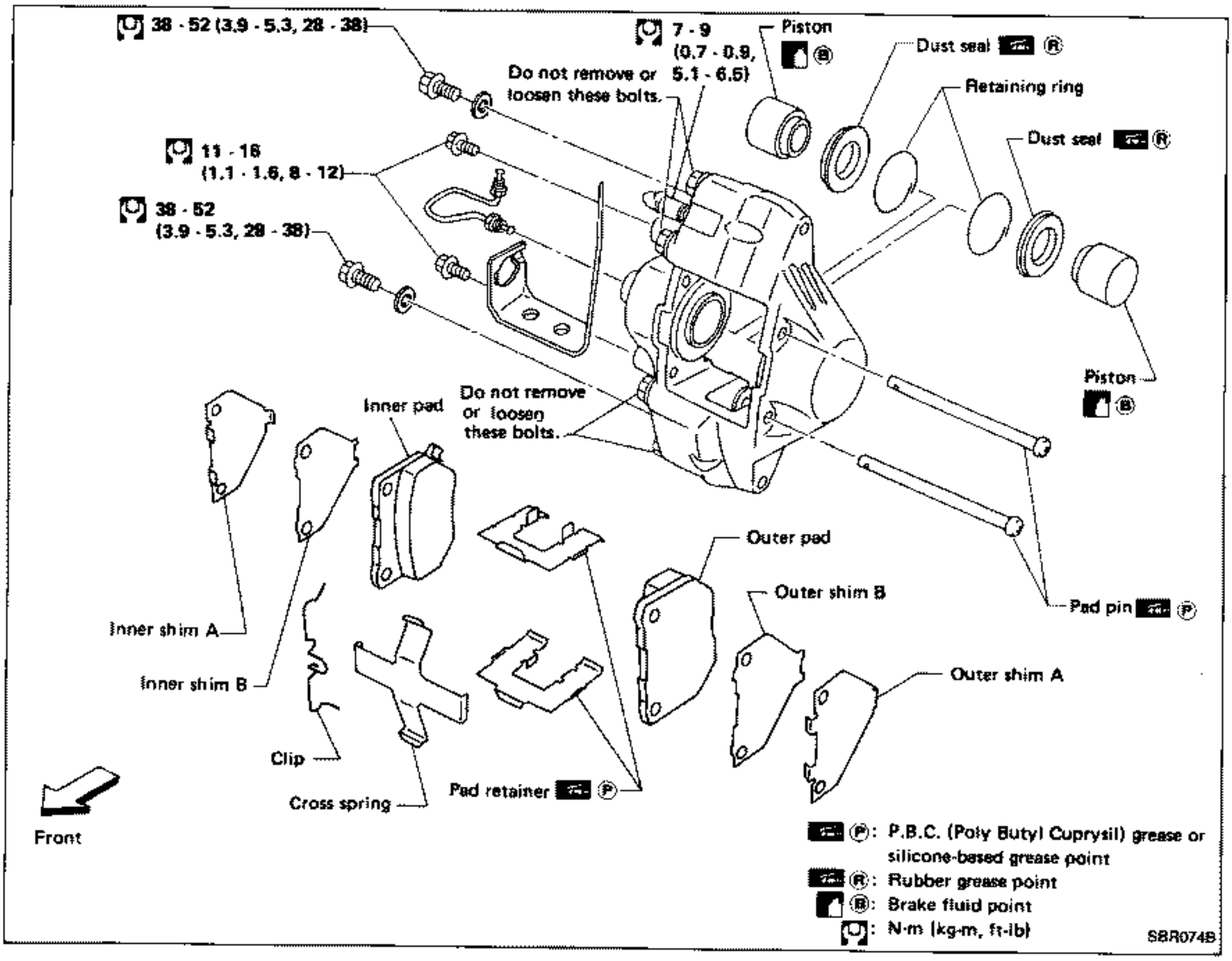

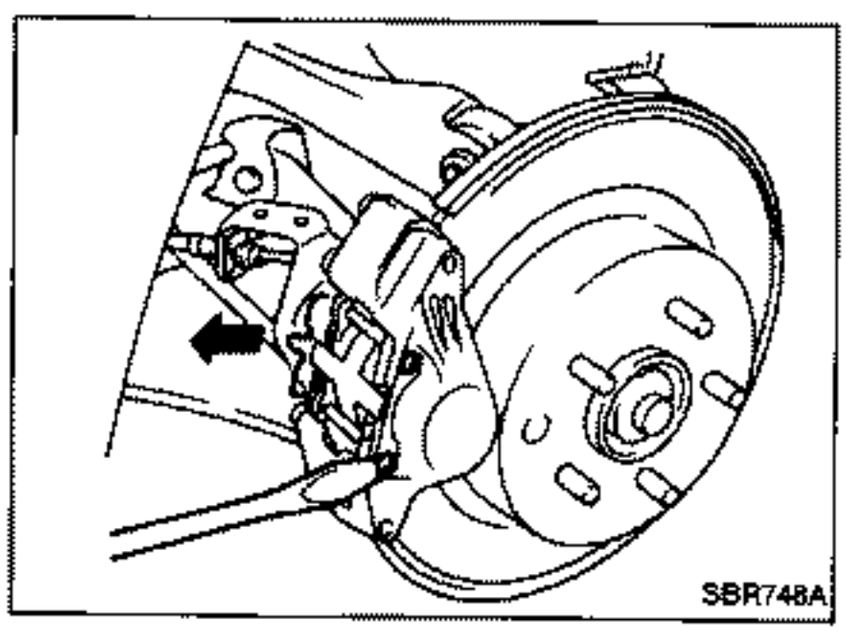

Pad Replacement

CAUTION:
When pads are removed, do not depress brake pedal because piston will pop out.

1. Remove clip from pad pin and then remove pad pin.
2. Remove cross spring.

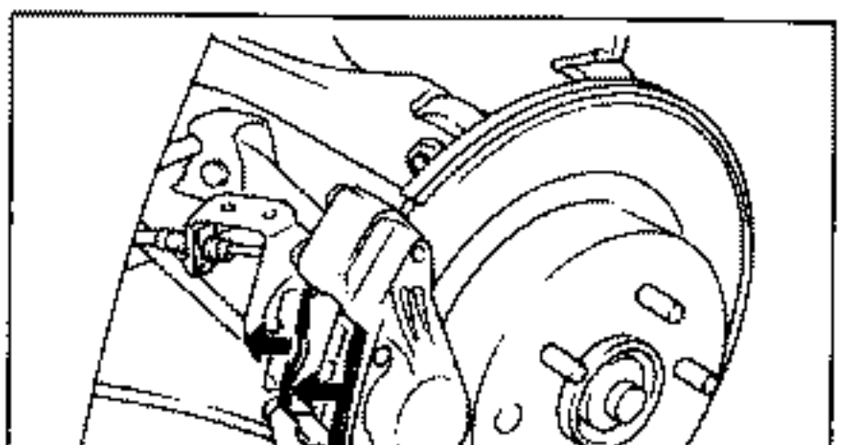

3. Pull out inner and outer pads.

CAUTION:
Be careful not to damage dust seal or get oil on rotor.
Always replace shims when replacing pads.

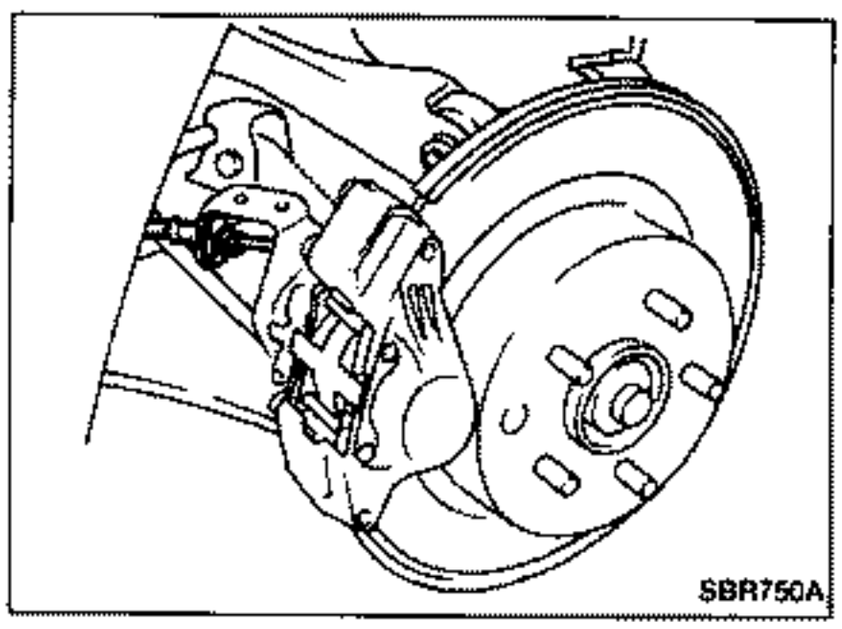

Removal and Installation

1. Disconnect brake tube.
2. Remove brake pad.

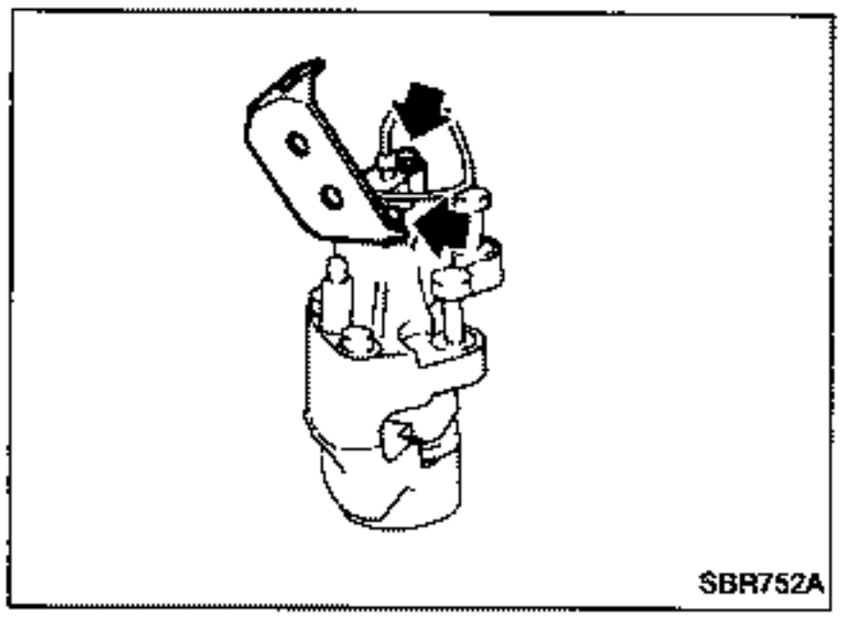

3. Remove brake cable and bracket.

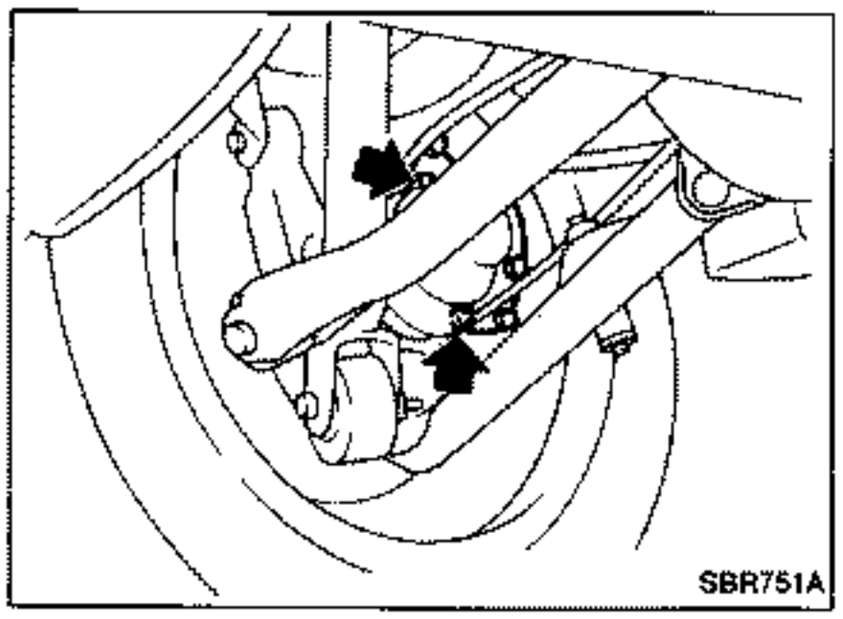

4. Remove axle housing fixing bolts.

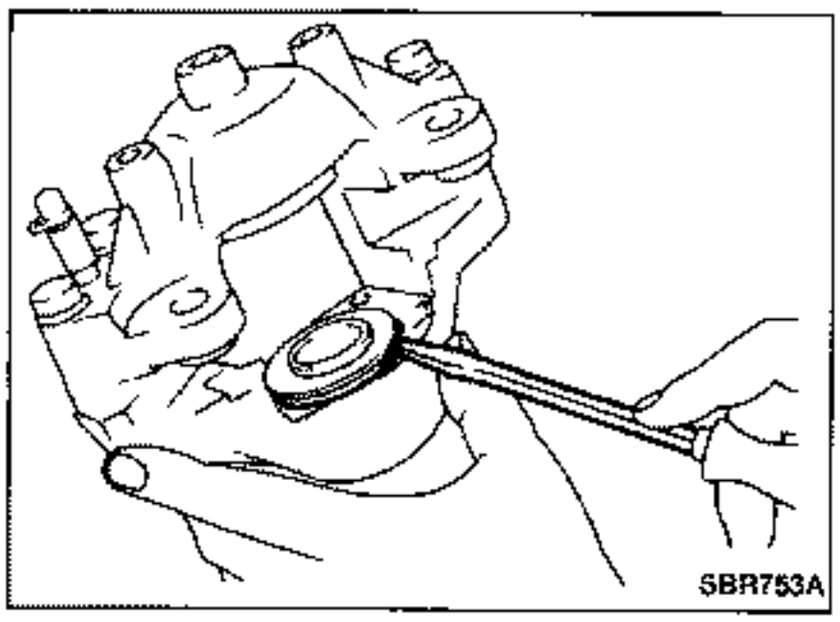

Disassembly

1. Remove retaining ring.

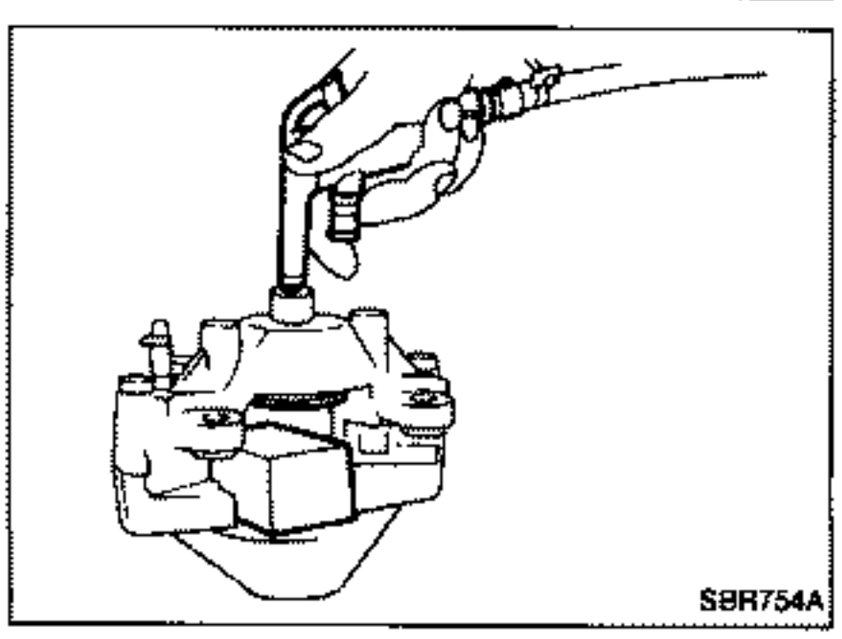

2. Push out piston with dust seal using compressed air.

Disassembly (Cont'd)

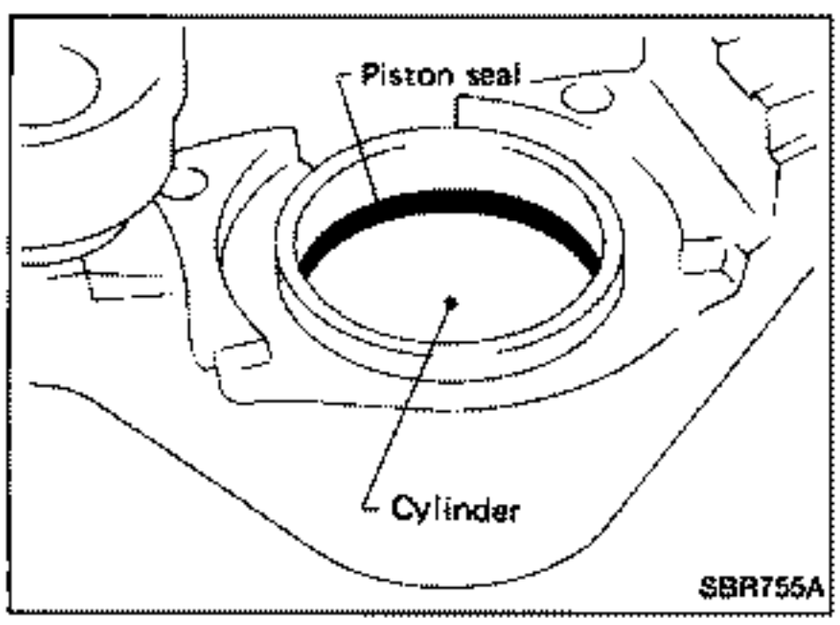

3. Remove piston seal.

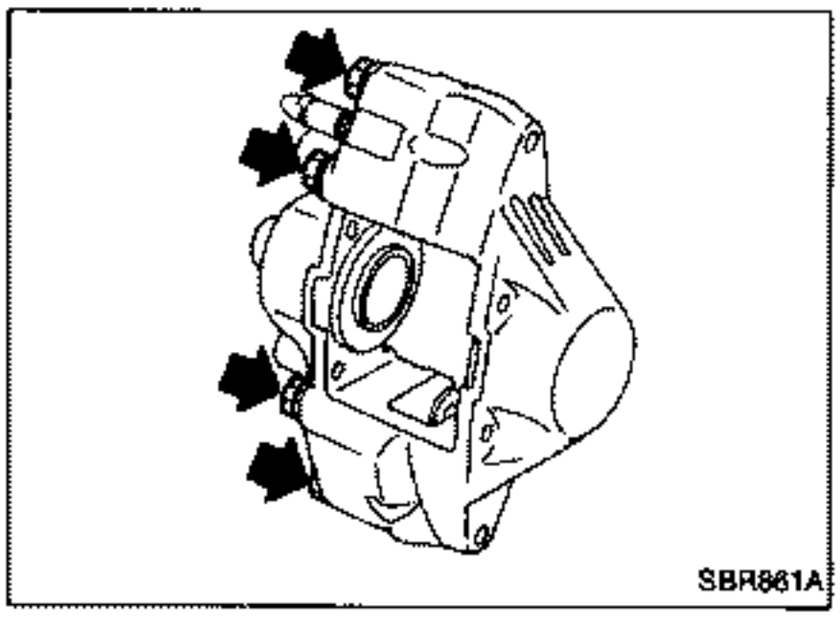

CAUTION:
Be careful not to loosen or remove bolts joining both sides of caliper.
If there is any fluid leakage, replace caliper assembly.

Inspection

CALIPER

- Check dust seals for damage.
- Check calipers for damage, rust or foreign materials.
- Check inside surface of cylinder for score, rust, wear or other damage.
- Minor damage from rust of foreign materials may be eliminated by polishing surface with a fine emery paper. Replace if necessary.

CAUTION:
Use brake fluid to clean.

PISTON

Check piston for score, rust, wear or other damage. Replace if necessary.

CAUTION:
Piston sliding surface is plated. Do not polish with emery paper even if rust or foreign matter is stuck to sliding surface.

PAD PIN AND CLIP

Check for wear, cracks deformation, deterioration, rust or other damage. Replace if necessary.

Z.ONE.DATSUN

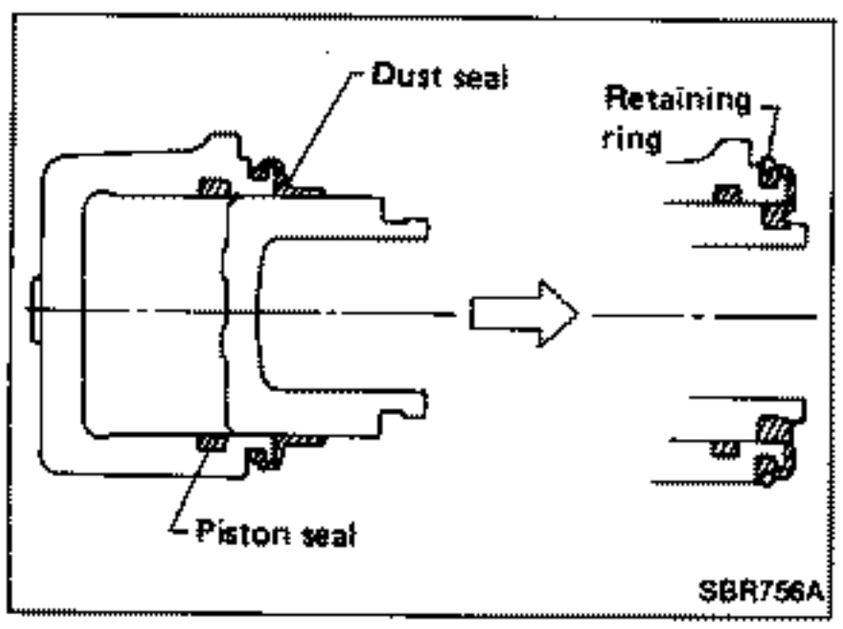

Assembly

1. Insert piston seal into groove on cylinder body.
2. With dust seal fitted to piston, install piston into cylinder body.
3. Secure dust seal properly.
4. Install retaining ring.

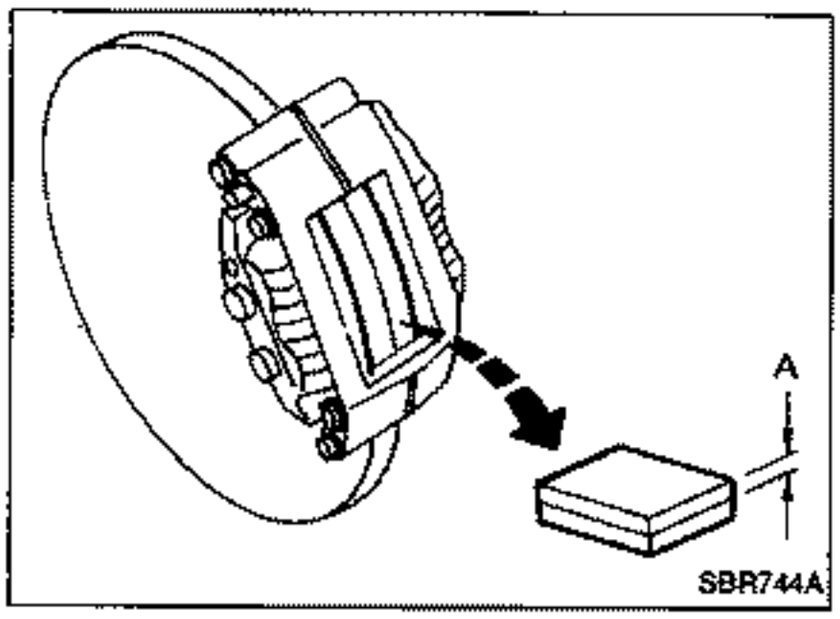

Inspection (On-vehicle)

DISC PAD

- Check pad shims for deformation or damage.
- Check disc pad for wear or damage.

Standard thickness (A):
11.5 mm (0.453 in)
Pad wear limit (A):
2.0 mm (0.079 in)

Inspection

RUBBING SURFACE

Check rotor for roughness, cracks or chips.

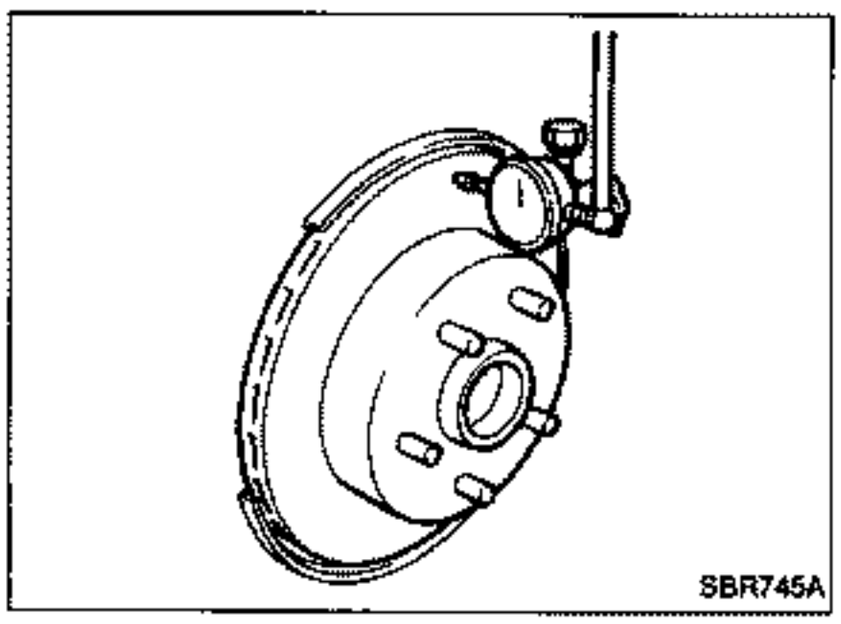
SBR745A

RUNOUT

- Check runout using a dial indicator.
- Make sure that axial end play is within the specifications before measuring. Refer to section RA.

Rotor repair limit:

Maximum runout
(Total indicator reading at center of rotor pad contact surface)
0.07 mm (0.0028 in)

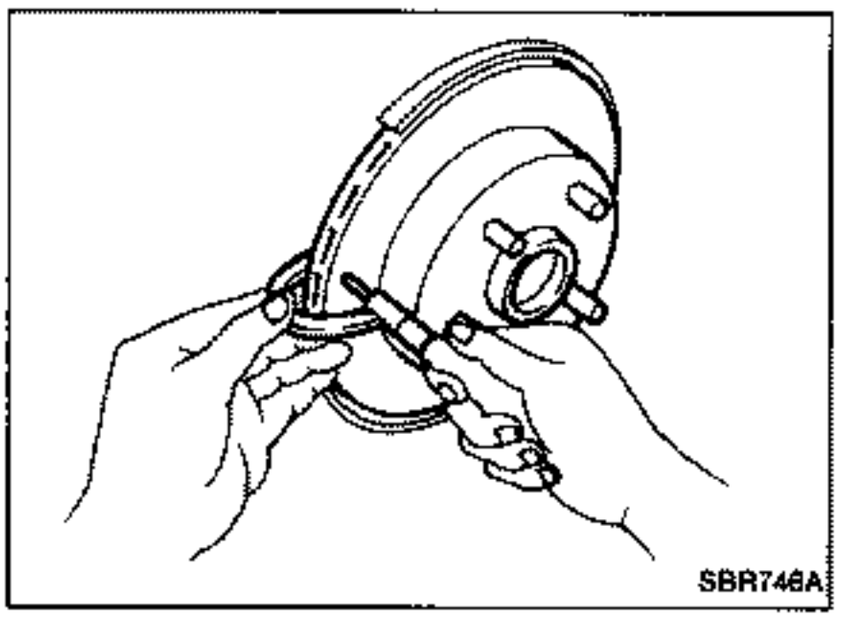
SBR746A

THICKNESS

Standard thickness:
18.0 mm (0.709 in)
Minimum thickness:
16.0 mm (0.630 in)

Z.ONE.DATSUN

Removal and Installation

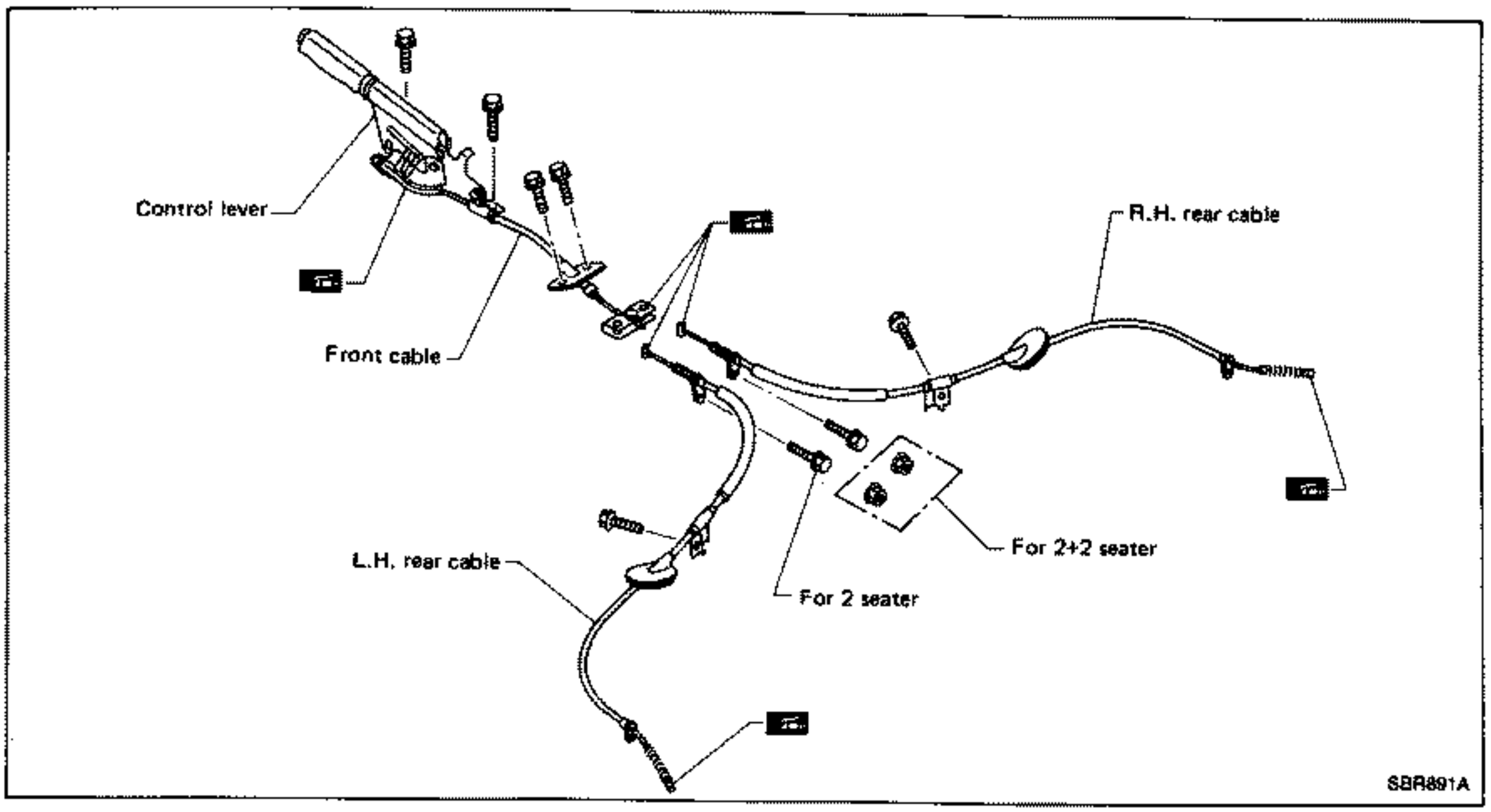

- Before removing parking brake control, remove console box.
- Loosen cable using control lever adjuster, and separate front and rear cables.

Apply multi-purpose grease to areas between control lever drum and cables.

Be careful not to damage boot and inner cable.

Inspection

1. Check control lever for wear or other damage. Replace if necessary.
2. Check parking brake cables, lamp and switch. Replace if necessary.
3. Check parts at each connecting portion for deformation or damage. If found, replace.

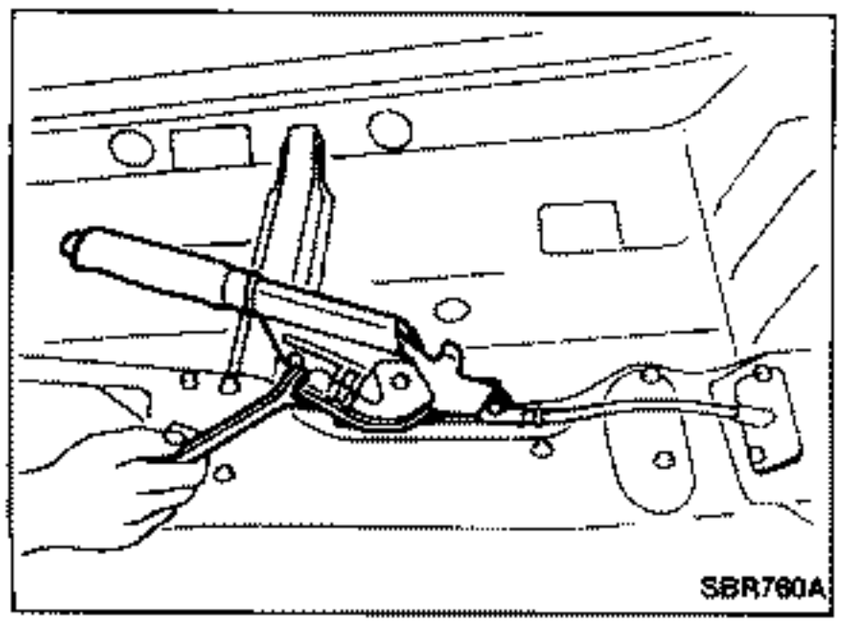

Adjustment

Perform shoe clearance adjustment before adjusting control lever stroke.

1. Turn adjusting nut.

Z.ONE.DATSUN

Adjustment (Cont'd)

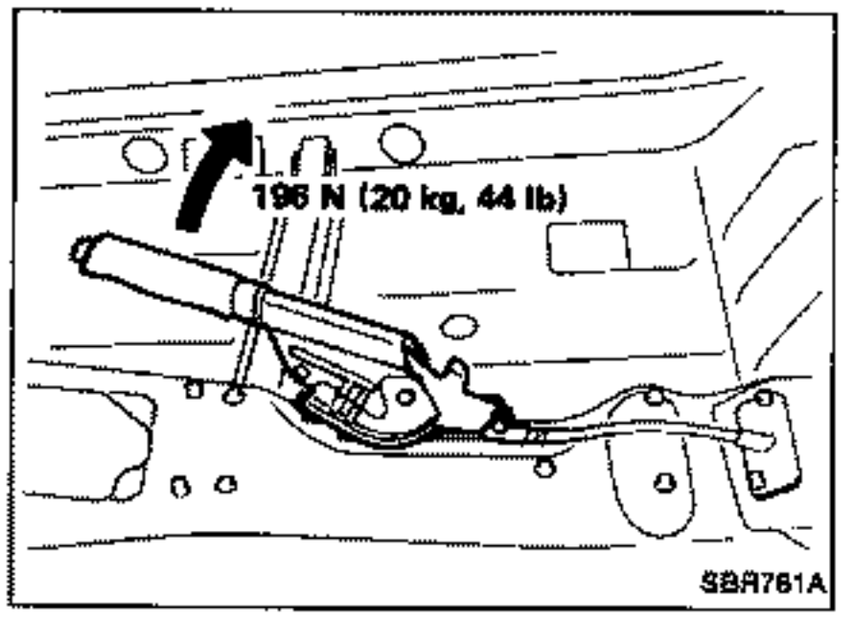

2. Pull control lever with specified amount of force. Check lever stroke and ensure smooth operation.
   Number of notches: 6 - 7

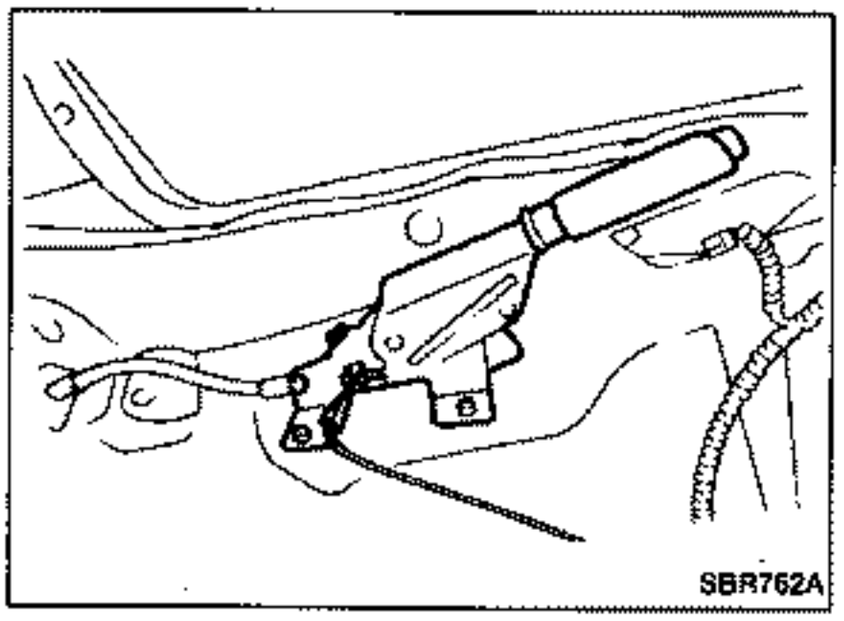

3. Bend parking brake warning lamp switch plate so that brake warning light comes on when ratchet at parking brake lever is pulled "A" notches and goes out when fully released.
   Number of notches "A": 1

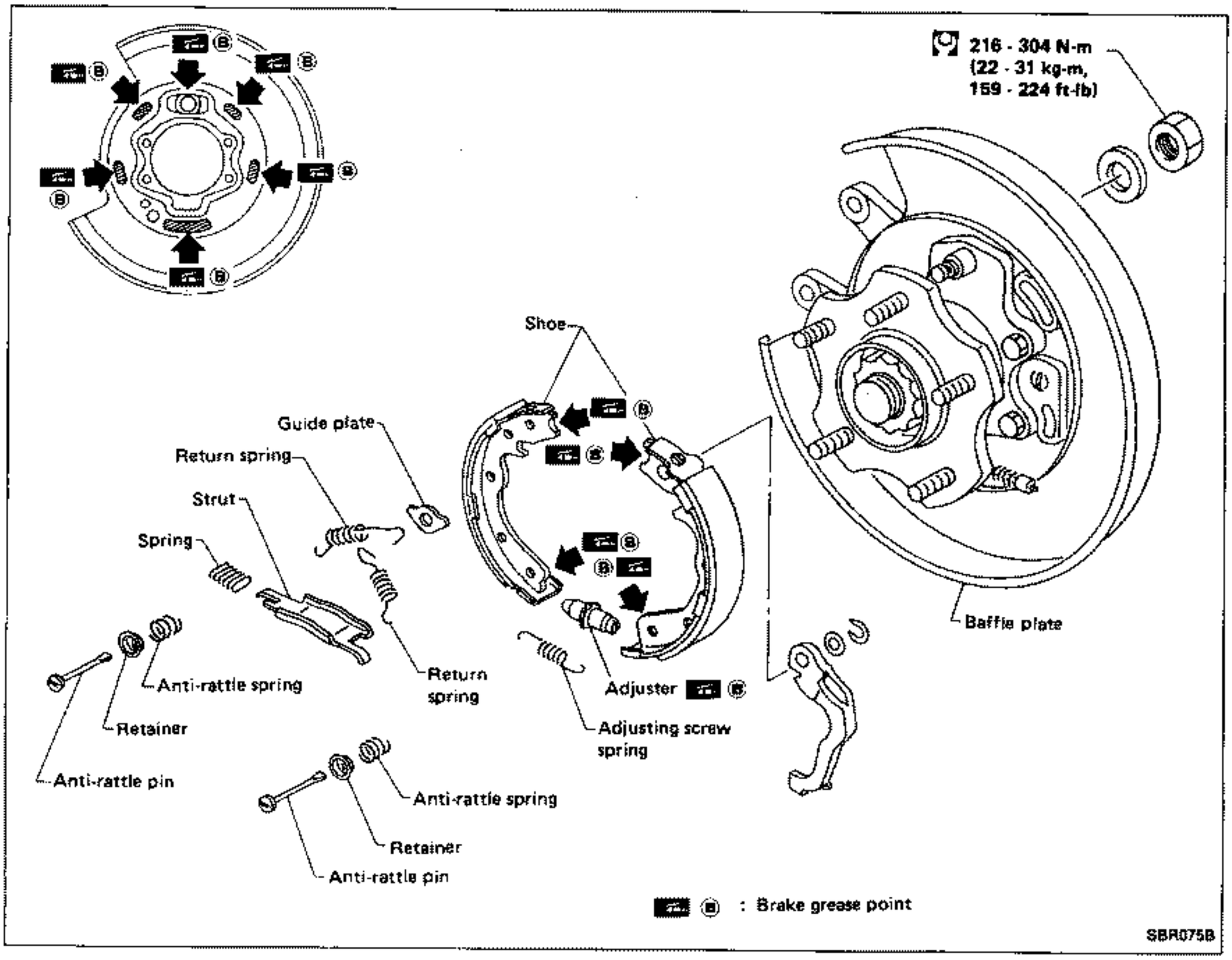

Shoe Replacement

1. Remove disc rotor (With parking drum brake).
   Tighten two bolts gradually if disc rotor is hard to remove.

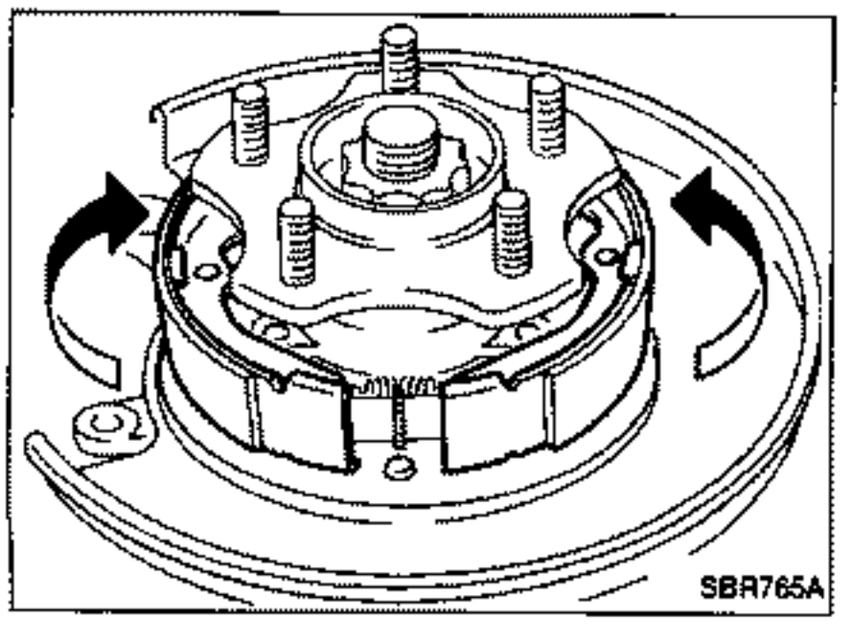

2. After removing anti-rattle pin, remove spring by rotating shoes.

Be careful not to damage parking brake cable when separating it.

Z.ONE.DATSUN

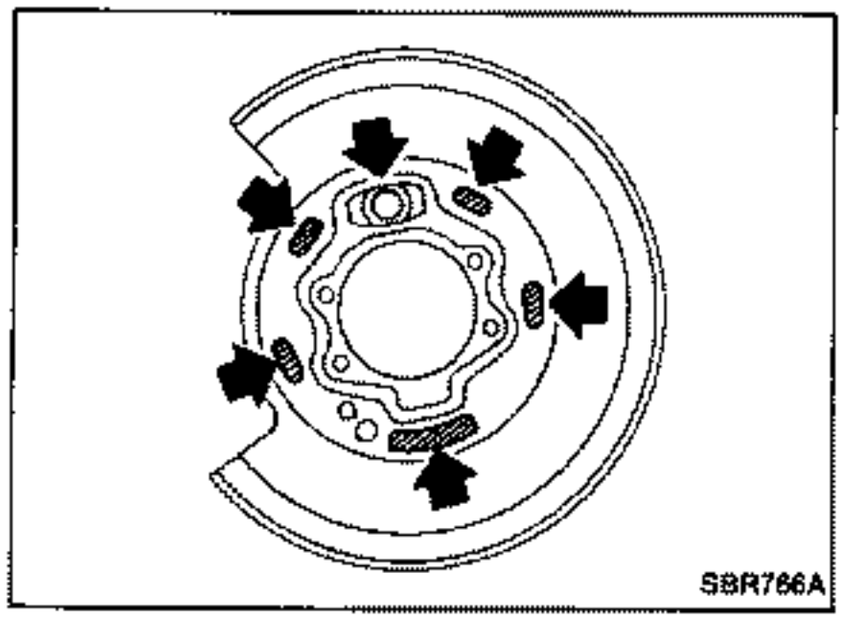

Shoe Replacement (Cont'd)

3. Apply brake grease to the contact areas shown at left.

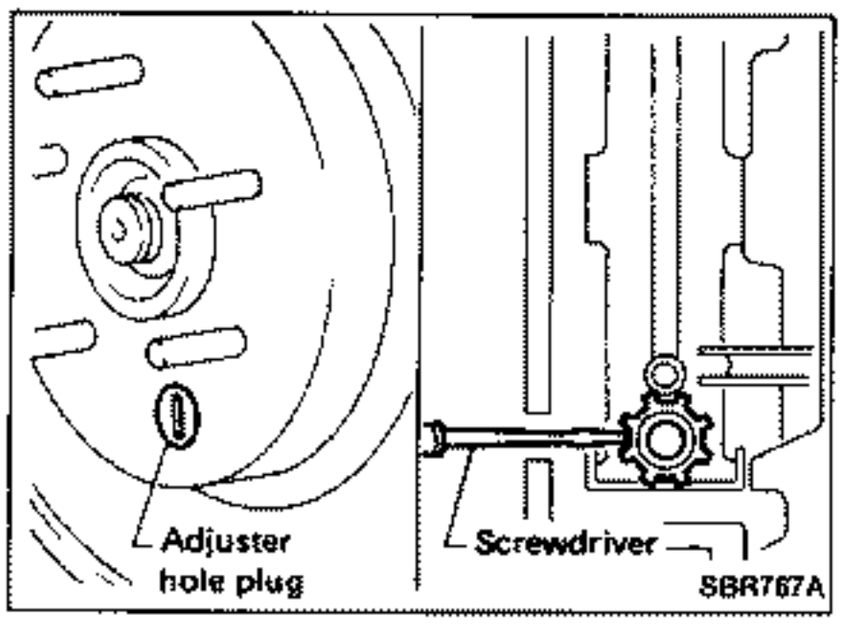

Shoe Clearance Adjustment

1. Remove adjuster hole plug, and turn adjuster wheel with a screwdriver until shoe touches brake drum.

Make sure that parking control lever is released completely.

2. Return adjuster wheel 5 to 6 latches.
3. Install adjuster hole plug, and make sure that there is no drag between shoes and brake drum when rotating disc rotor.

Breaking In Drum and Lining

1. Using either low or 2nd transmission speed, drive the unloaded vehicle on a safe, level and dry road.
2. Depress the release button of parking brake lever, then pull the lever with a force of 98 N (10 kg, 22 lb).
3. While holding the lever, continue to drive the vehicle forward 100 m (328 ft) at approximately 35 km/h (22 MPH).
4. While holding the lever, drive the vehicle in reverse 10 m (33 ft) at approximately 10 km/h (6 MPH).
5. Repeat steps 1 through three times and then repeat only step 4 one more time.

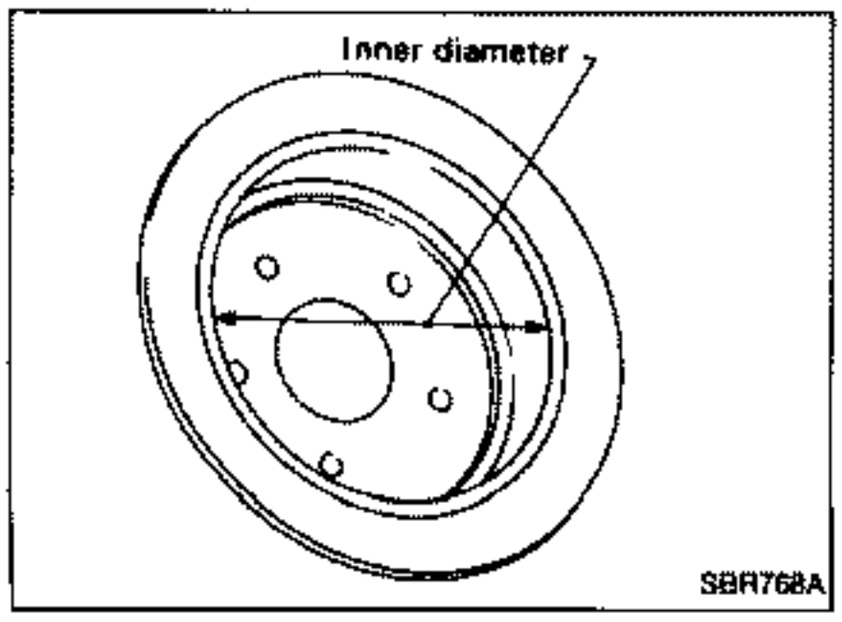

Drum Inspection

Standard inner diameter:
172.0 mm (6.77 in)
Maximum inner diameter:
173.0 mm (6.81 in)

System Components

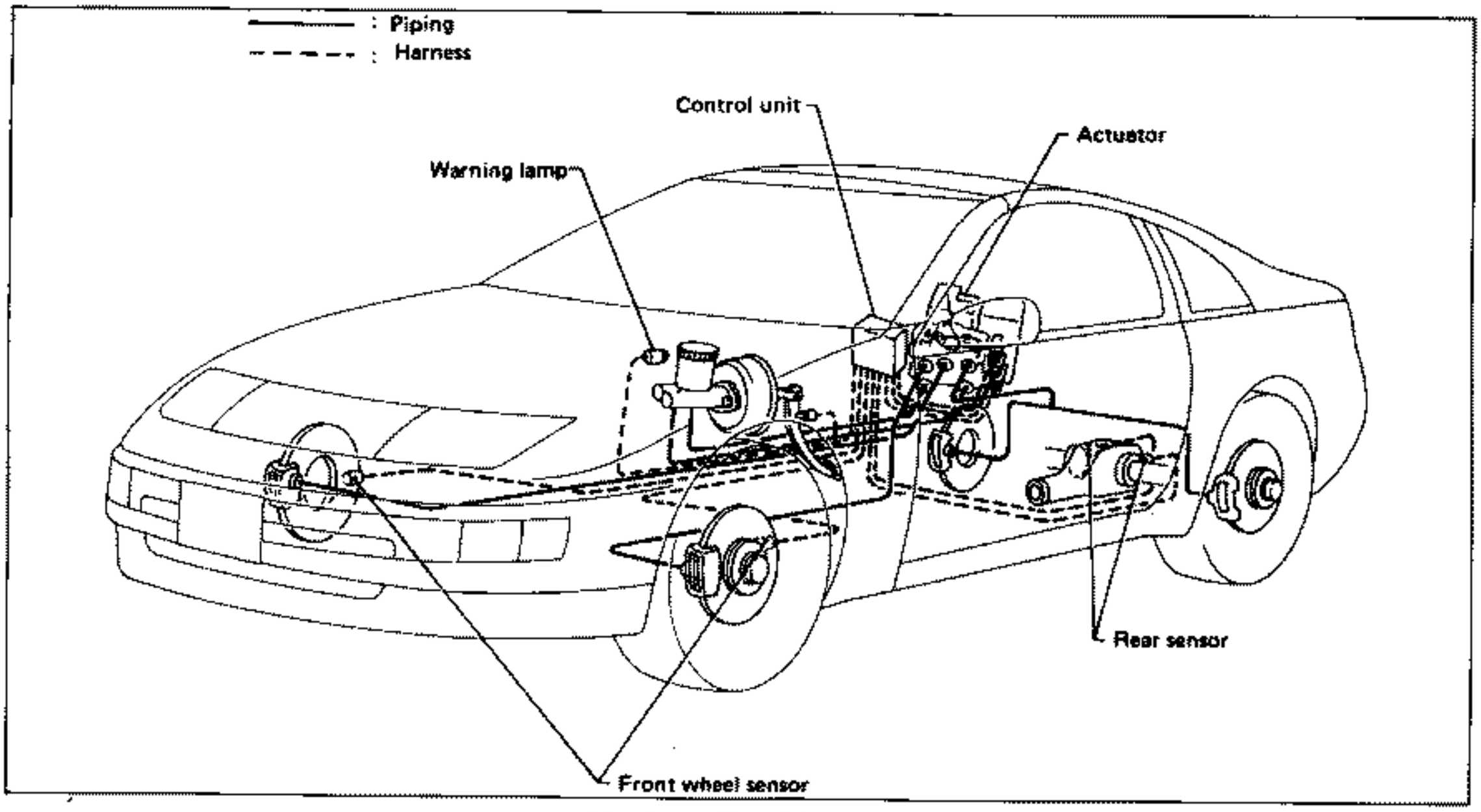

Hydraulic Circuit

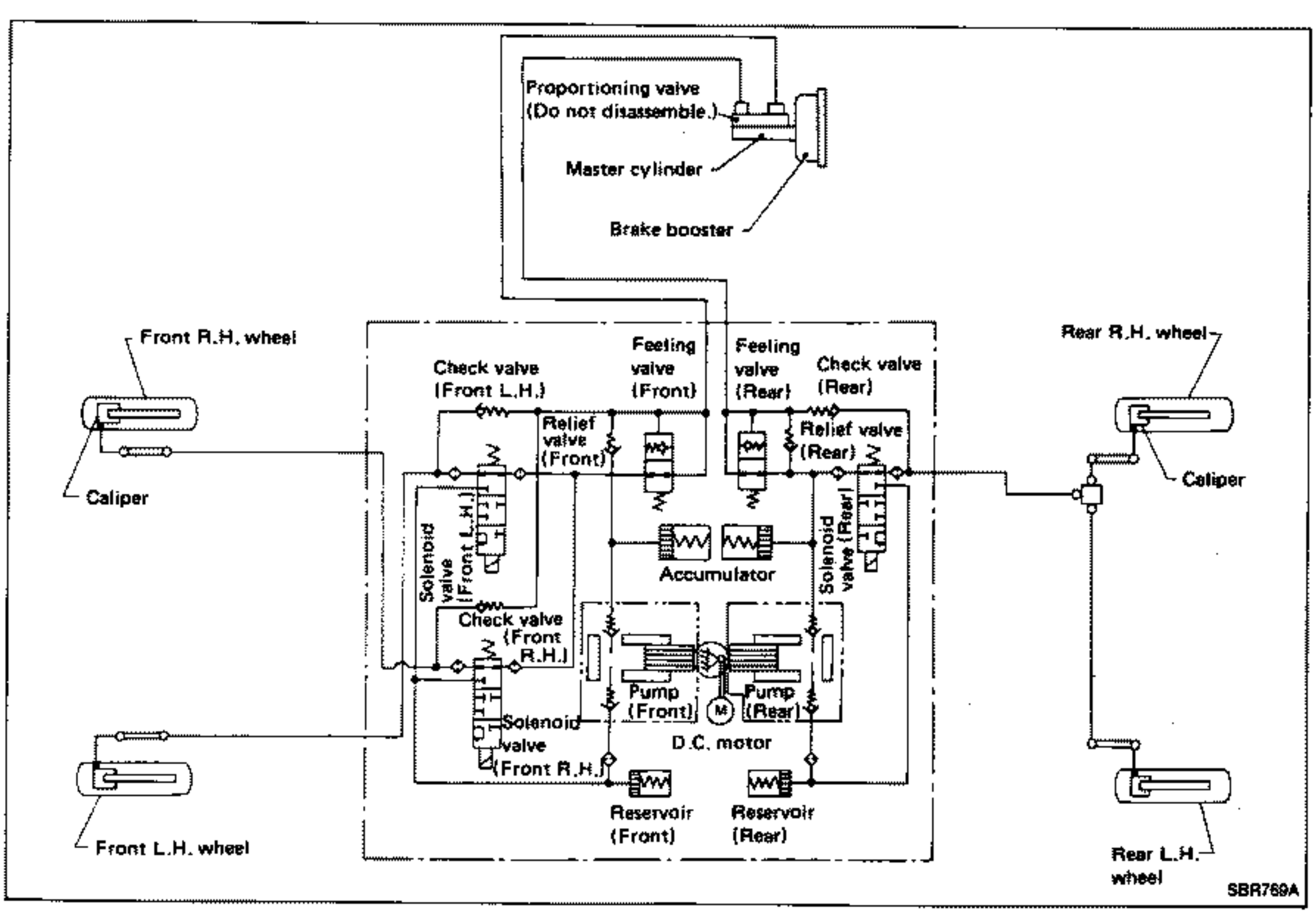

Z.ONE.DATSUN

Wiring Diagram

L.H.D.

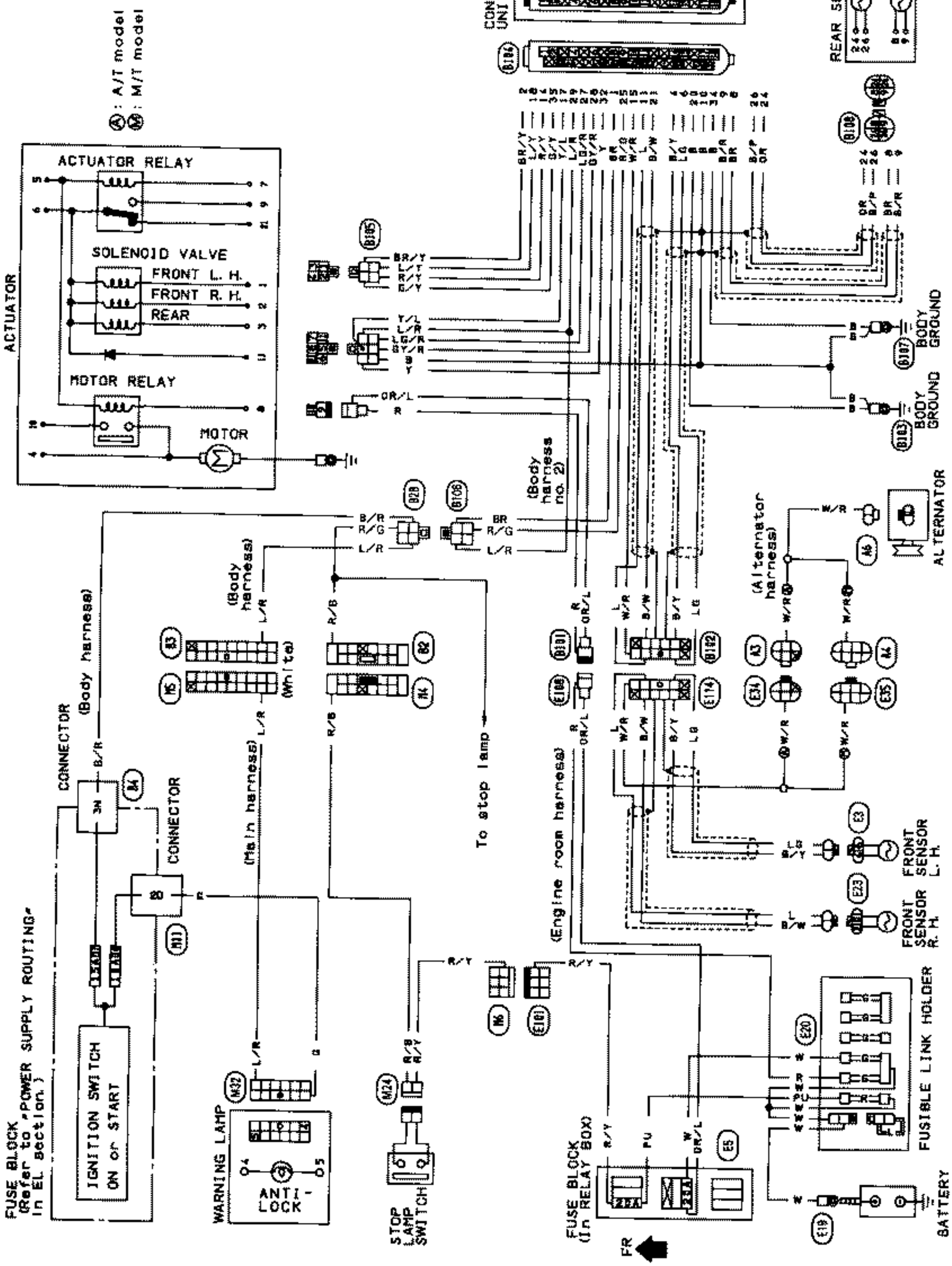

SBR179B

Z.ONE.DATSUN

Wiring Diagram (Cont'd)

R.H.D.

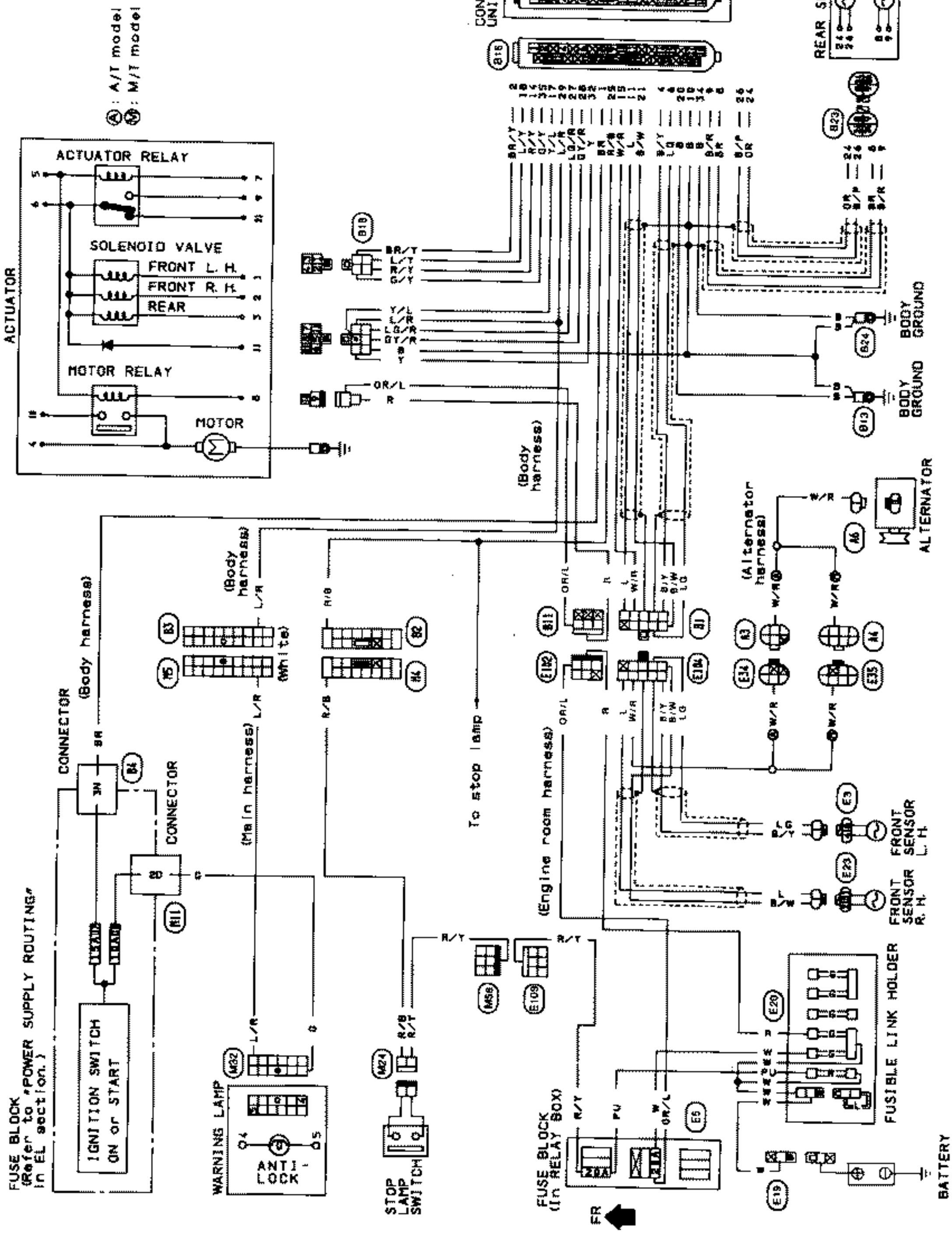

Z.ONE.DATSUN

SBR180B

Removal and Installation

CAUTION:
Be careful not to damage sensor edge and sensor rotor teeth.

FRONT WHEEL SENSOR

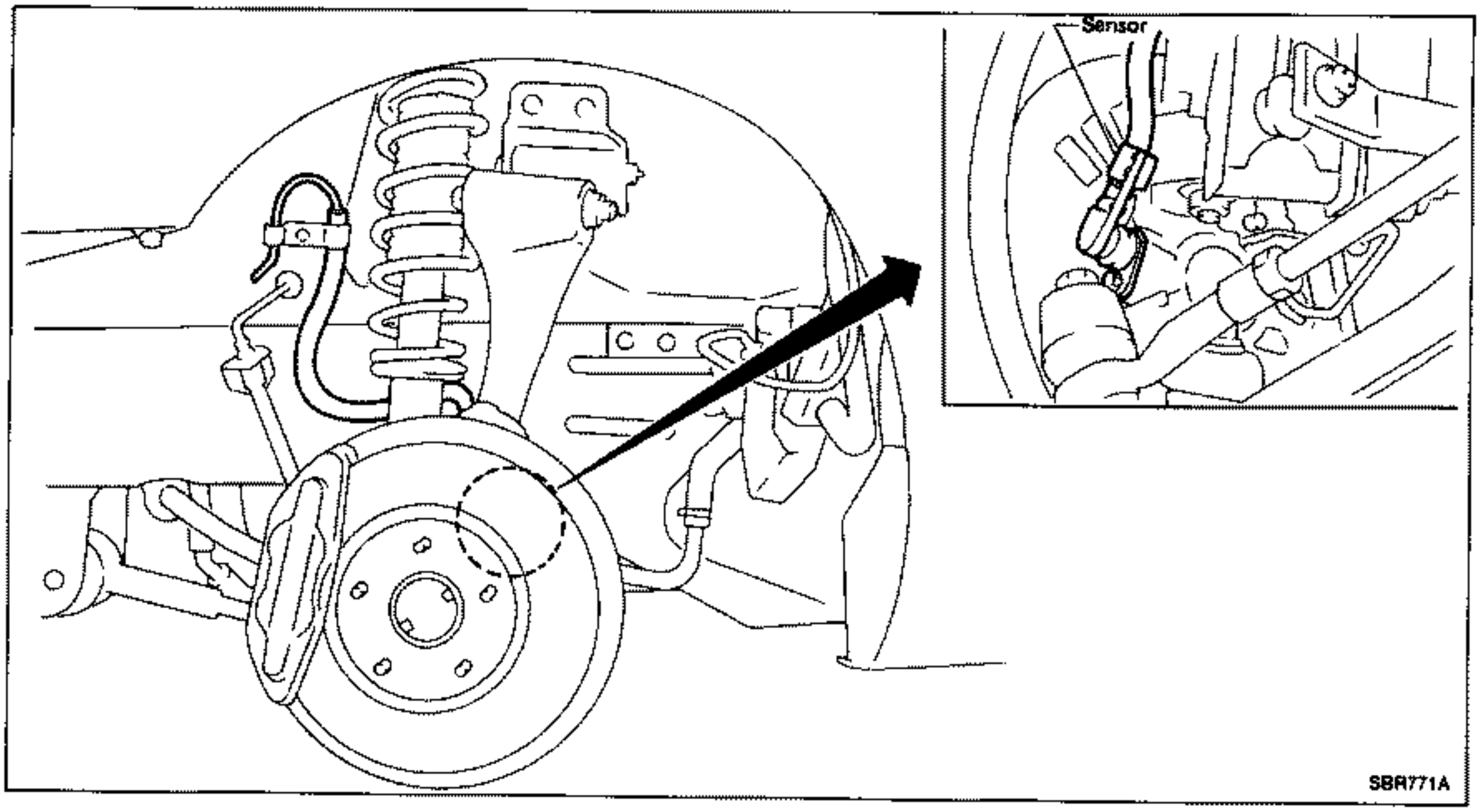

REAR SENSOR

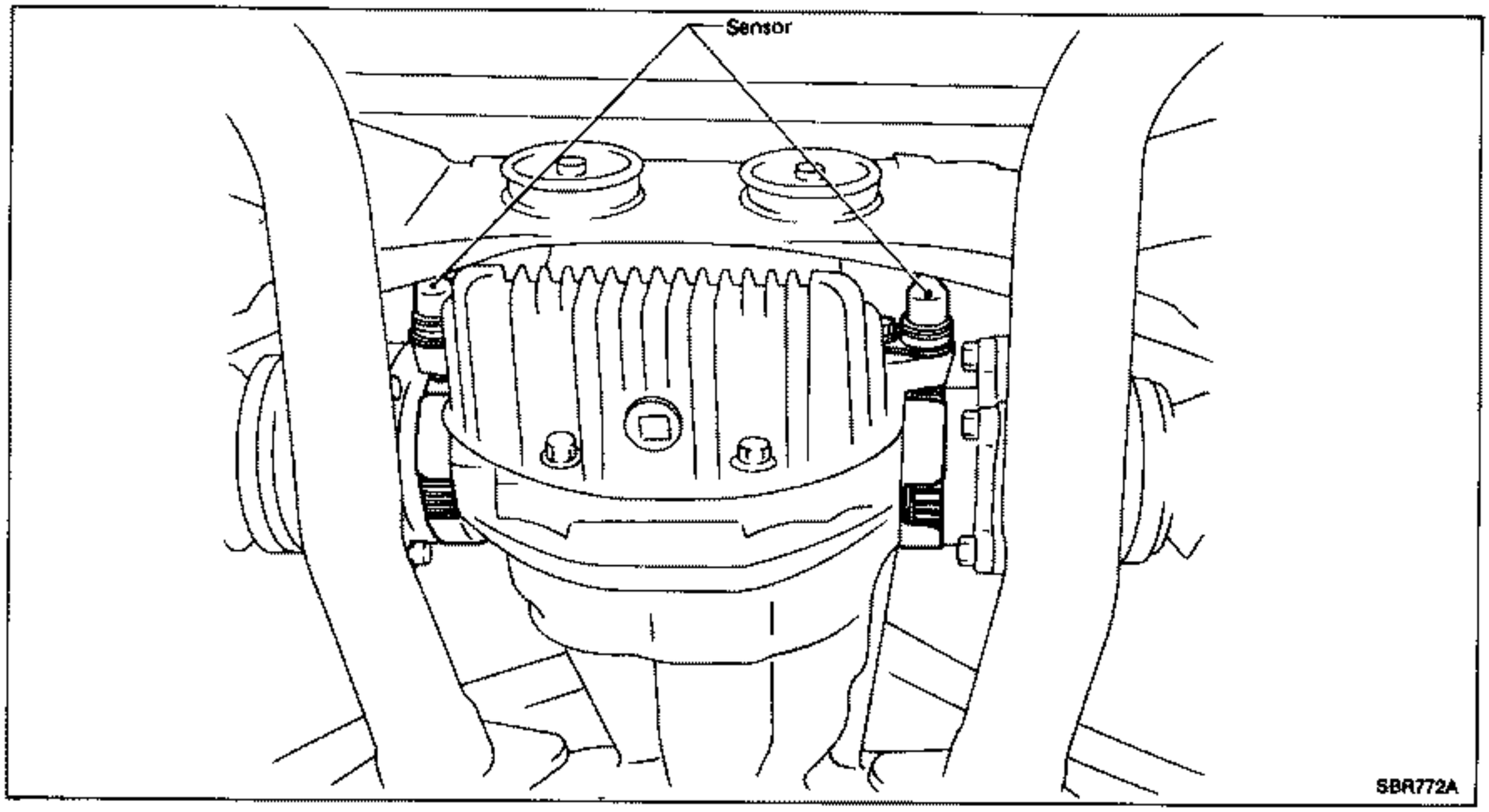

- Remove rear sensor rotor with differential side flange after drive shaft removal.
  Refer to RA section.

Removal and Installation (Cont'd)

ACTUATOR

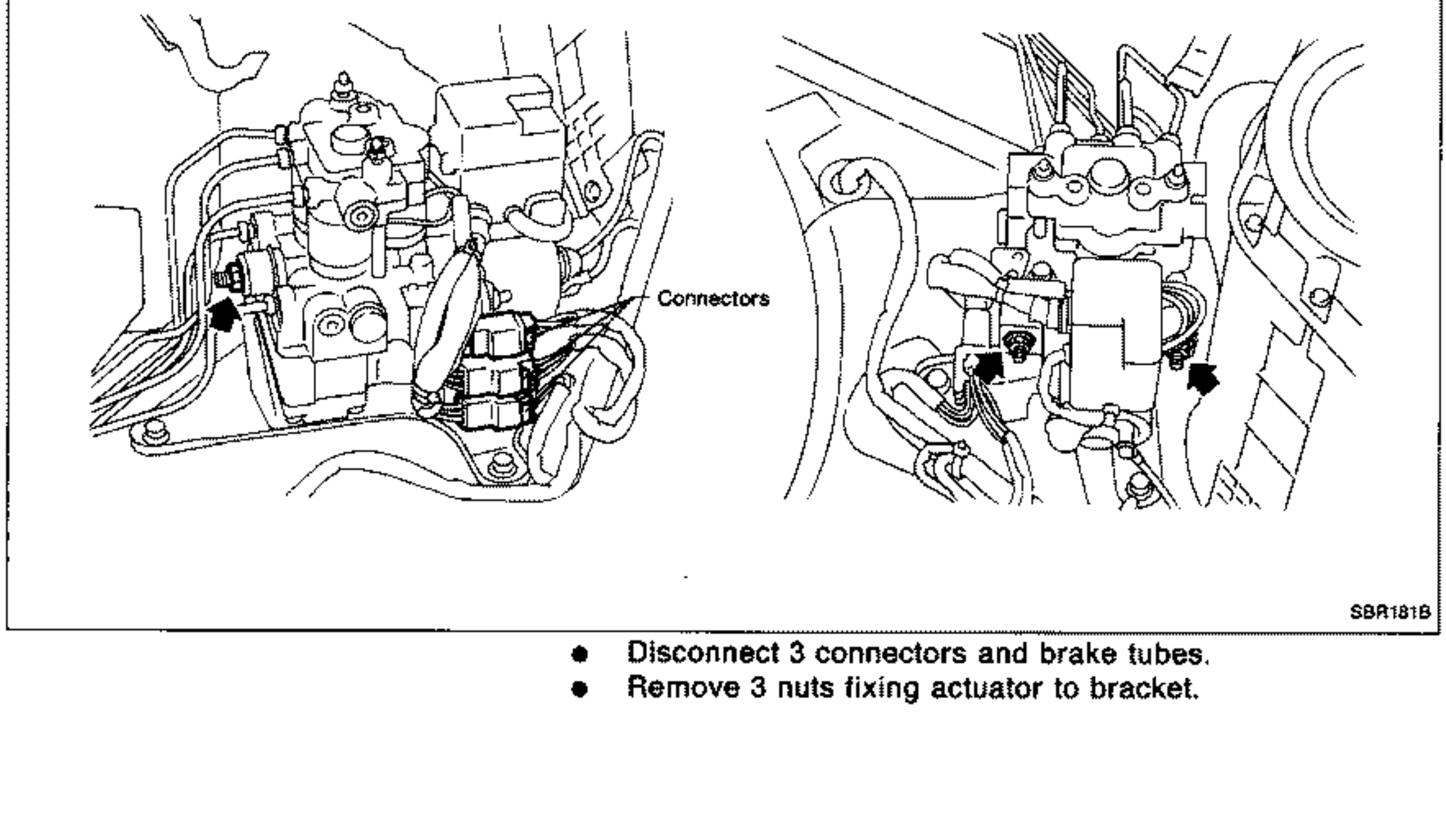

- Disconnect 3 connectors and brake tubes.
- Remove 3 nuts fixing actuator to bracket.

Contents

How to Perform Trouble Diagnoses for Quick and Accurate Repair BR-31
Symptom Chart BR-34
Preliminary Check 1 ..... BR-35
Preliminary Check 2 ..... BR-36
Preliminary Check 3, 4 ..... BR-37
Self-diagnosis BR-38
Component Parts Location BR-39
Harness Connector Location BR-40
Ground Circuit Check BR-41
Circuit Diagram for Quick Pinpoint Check BR-42
Diagnostic Procedure 1 ..... BR-43
Diagnostic Procedure 2 ..... BR-45
Diagnostic Procedure 3 ..... BR-45
Diagnostic Procedure 4 ..... BR-46
Diagnostic Procedure 5 ..... BR-46
Diagnostic Procedure 6 ..... BR-47
Diagnostic Procedure 7 ..... BR-48
Diagnostic Procedure 8 ..... BR-49
Diagnostic Procedure 9 ..... BR-50
Diagnostic Procedure 10 ..... BR-51
Diagnostic Procedure 11 ..... BR-52
Electrical Components Inspection BR-53

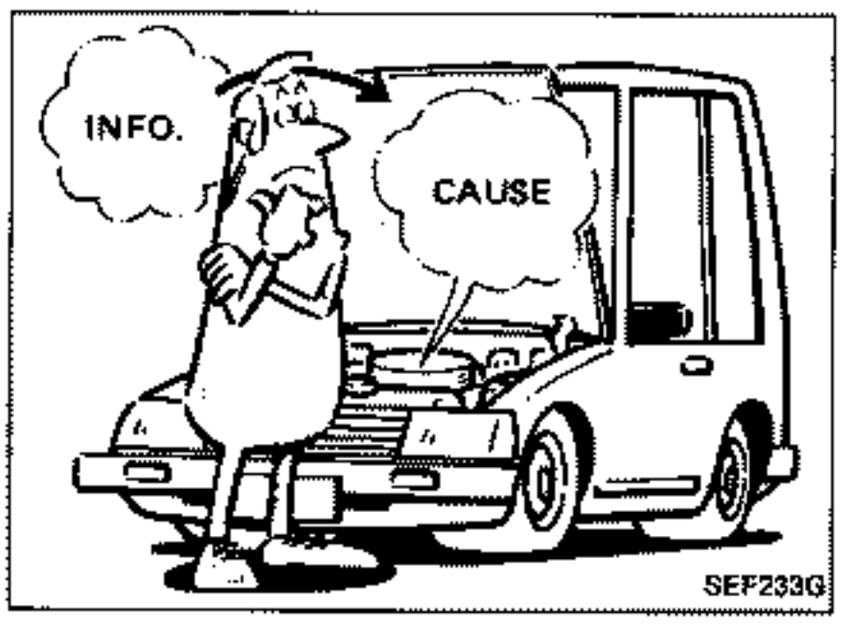

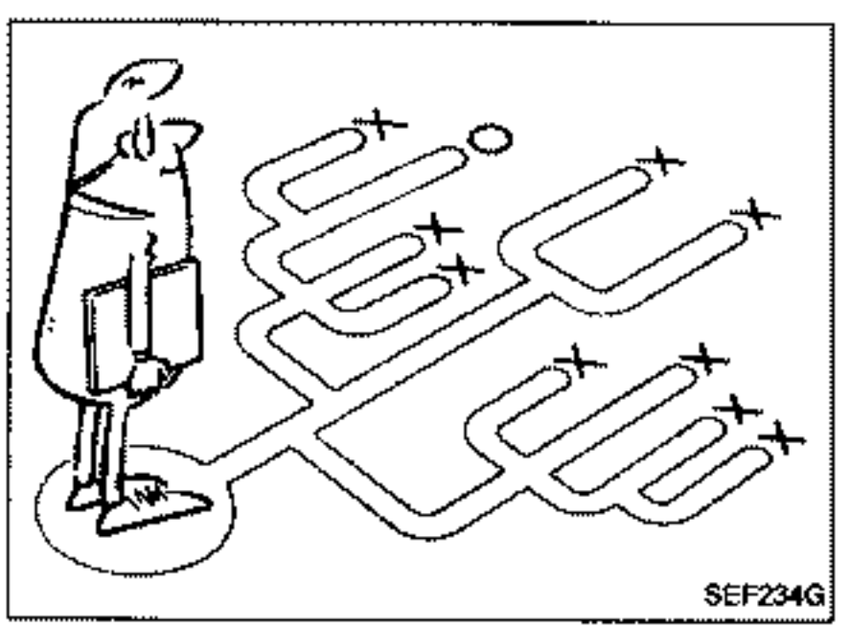

How to Perform Trouble Diagnoses for Quick and Accurate Repair

INTRODUCTION

The A.B.S. system has an electronic control unit to control major functions. The control unit accepts input signals from sensors and instantly drives actuators. It is essential that both kinds of signals are proper and stable. At the same time, it is important that there are no conventional problems such as air leaks in the booster or lines, lack of brake fluid, or other problems with brake system.

It is much more difficult to diagnose a problem that occurs intermittently rather than continuously. Most intermittent problems are caused by poor electric connections or faulty wiring. In this case, careful checking of suspicious circuits may help prevent the replacement of good parts.

A visual check only may not find the cause of the problems, so a road test should be performed.

Before undertaking actual checks, take just a few minutes to talk with a customer who approaches with a A.B.S. complaint. The customer is a very good source of information on such problems; especially intermittent ones. Through the talks with the customer, find out what symptoms are present and under what conditions they occur.

Start your diagnosis by looking for "conventional" problems first. This is one of the best ways to troubleshoot brake problems on an A.B.S. controlled vehicle.

How to Perform Trouble Diagnoses for Quick and Accurate Repair (Cont'd)

WORK FLOW

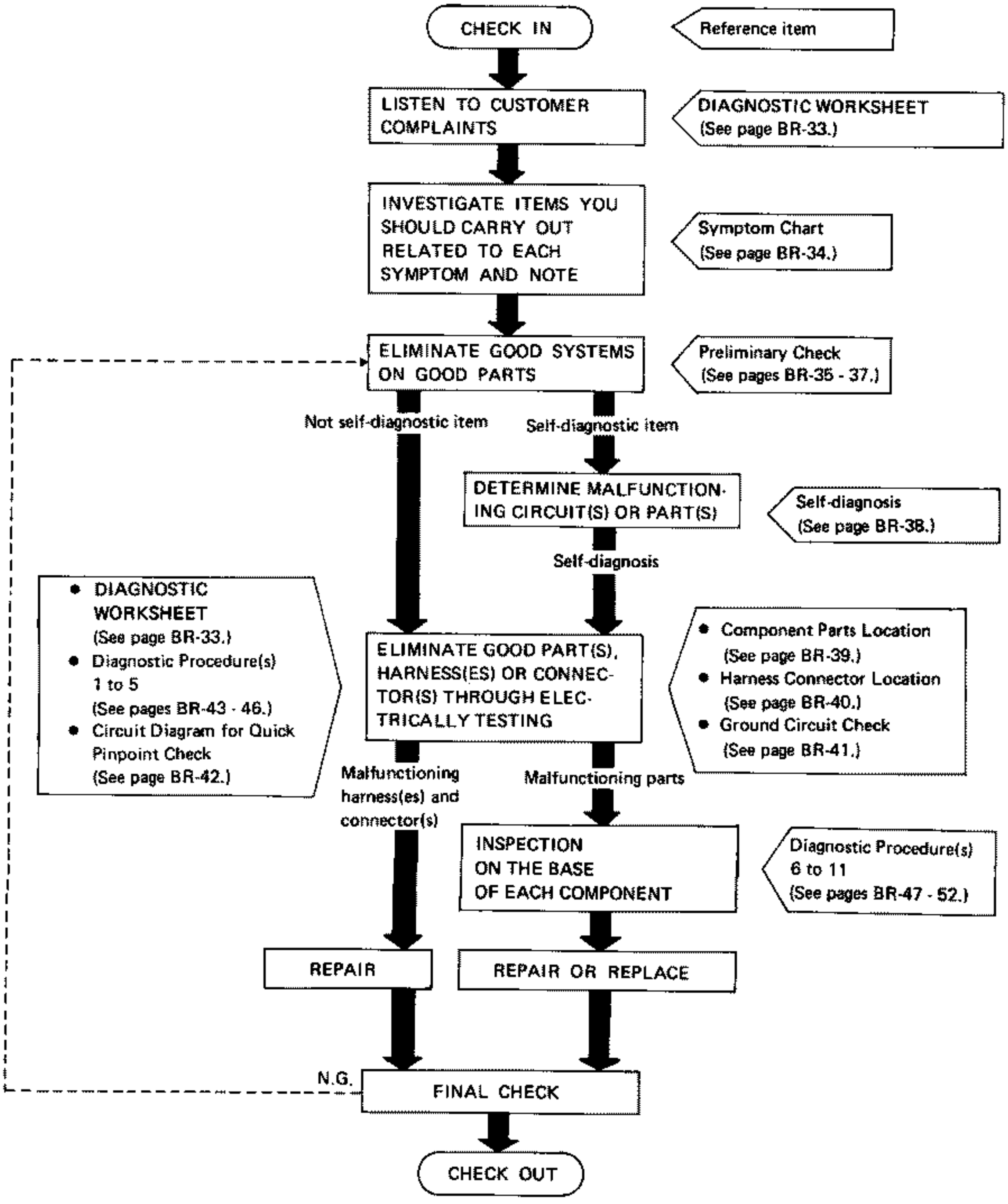

Z.ONE.DATSUN

How to Perform Trouble Diagnoses for Quick and Accurate Repair (Cont'd)

KEY POINTS

WHAT ..... Vehicle model
WHEN ..... Date, Frequencies
WHERE ..... Road conditions
HOW ..... Operating conditions, Weather conditions, Symptoms

DIAGNOSTIC WORKSHEET

There are many kinds of operating conditions that lead to customer complaints, even if the system is normal.
A good grasp of such conditions can make trouble-shooting faster and more accurate.
In general, feelings for a problem depend on each customer's information. It is therefore important to fully understand the symptoms or under what conditions a customer complains.
Make good use of a diagnostic worksheet such as the one shown below in order to utilize all the complaints for trouble-shooting.

Worksheet sample

Customer name MR/MS		Model & Year			VIN		
Engine #		Trans.			Mileage		
Incident Date		Manuf. Date			In Service Date		
Symptoms	☐ Pedal vibration and noise	☐ Warning activates	☐ Long stopping distance	☐ Abnormal pedal action	☐ A.B.S. doesn't work	☐ A.B.S. works but warning activates	☐ A.B.S. works frequently
Engine conditions		☐ When starting ☐ After starting ☐ Engine speed: 5,000 rpm or more					
Road conditions		☐ Low friction road (☐ Snow ☐ Gravel ☐ Other) ☐ Protrusion					
Driving conditions		☐ High speed cornering ☐ Vehicle speed: Greater than 10 km/h (6 MPH) ☐ Vehicle speed: 10 km/h (6 MPH) or less ☐ Vehicle is stopped					
Applying brake conditions		☐ Suddenly ☐ Gradually					
Other conditions		☐ Operation of electrical equipment ☐ Large pedal stroke ☐ Operation of clutch					

Symptom Chart

	PROCEDURE	REFERENCE PAGE		SYMPTOM						
Electrical Components Inspection		BR-53	Actuator inspection					○		
Ground Circuit Check		BR-41	Motor ground					○		
		BR-41	Control unit ground					○		
Diagnostic Procedure (Select Inspection with L.E.D. flashing No.)		BR-52	Diagnostic Procedure 11	○	○	○	○	○	○	
		BR-51	Diagnostic Procedure 10	○	○	○	○	○	○	
		BR-50	Diagnostic Procedure 9	○	○	○	○	○	○	
		BR-49	Diagnostic Procedure 8	○	○	○	○	○	○	
		BR-48	Diagnostic Procedure 7	○	○	○	○	○	○	
		BR-47	Diagnostic Procedure 6	○	○	○	○	○	○	
Diagnostic Procedure		BR-46	Diagnostic Procedure 5						○	
		BR-46	Diagnostic Procedure 4					○		
		BR-45	Diagnostic Procedure 3				○			
		BR-45	Diagnostic Procedure 2			○				
		BR-43	Diagnostic Procedure 1	○						
Preliminary Check		BR-37	Preliminary Check 4	○	○	○	○	○	○	
		BR-37	Preliminary Check 3	○	○					
		BR-36	Preliminary Check 2		○			○		
		BR-35	Preliminary Check 1			○	○			

Preliminary Check 1

CHECK

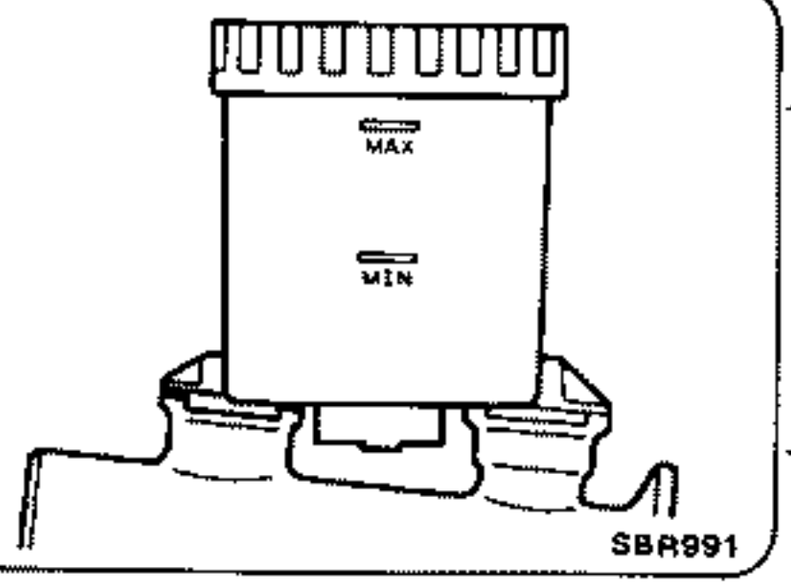

Check brake fluid level in reservoir tank.

N.G. → Fill up brake fluid.

O.K. →

CHECK

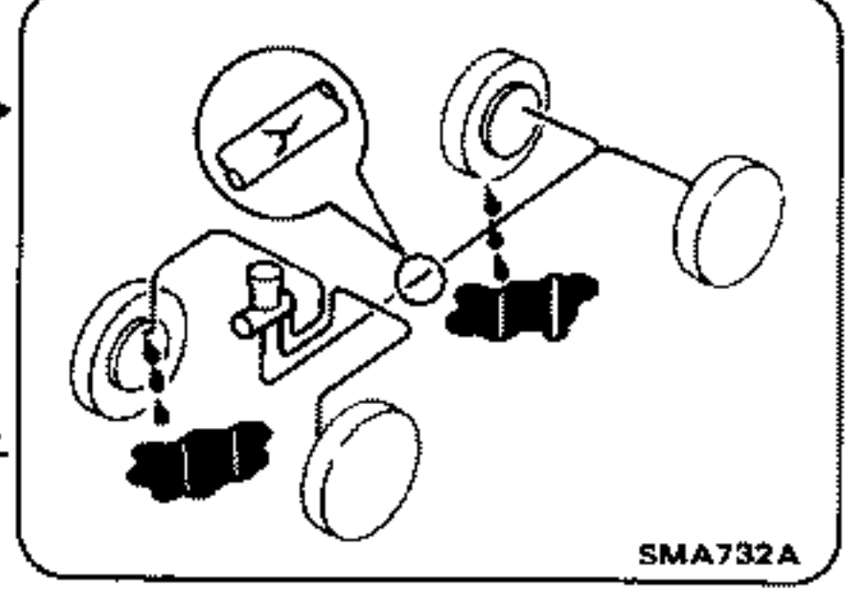

Check brake system.
Refer to CHECK AND ADJUSTMENT.

O.K. ↓

CHECK

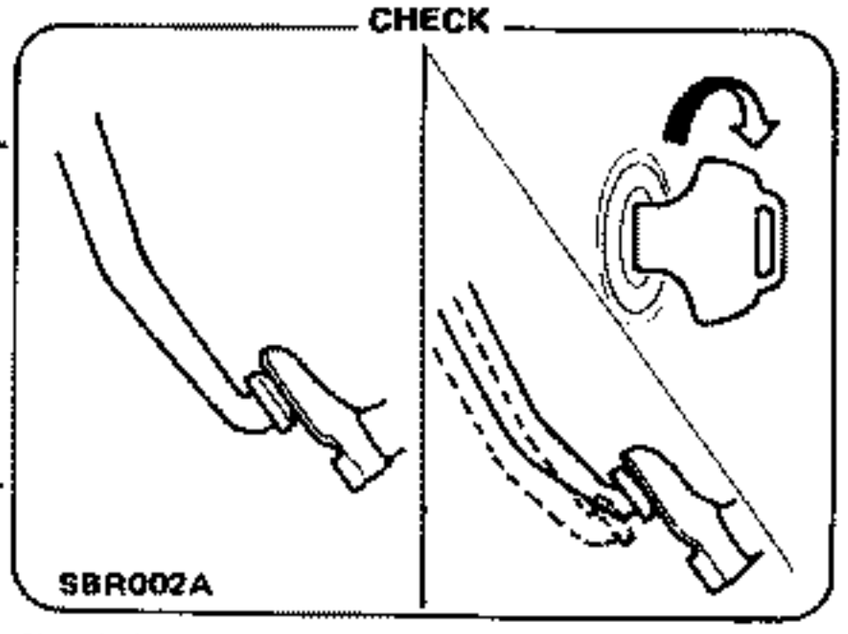

Check brake booster operation and airtightness.
Refer to "Inspection" of BRAKE BOOSTER.

N.G. ← Repair brake system.

O.K. ←

N.G. ← Repair or replace booster system.

CHECK

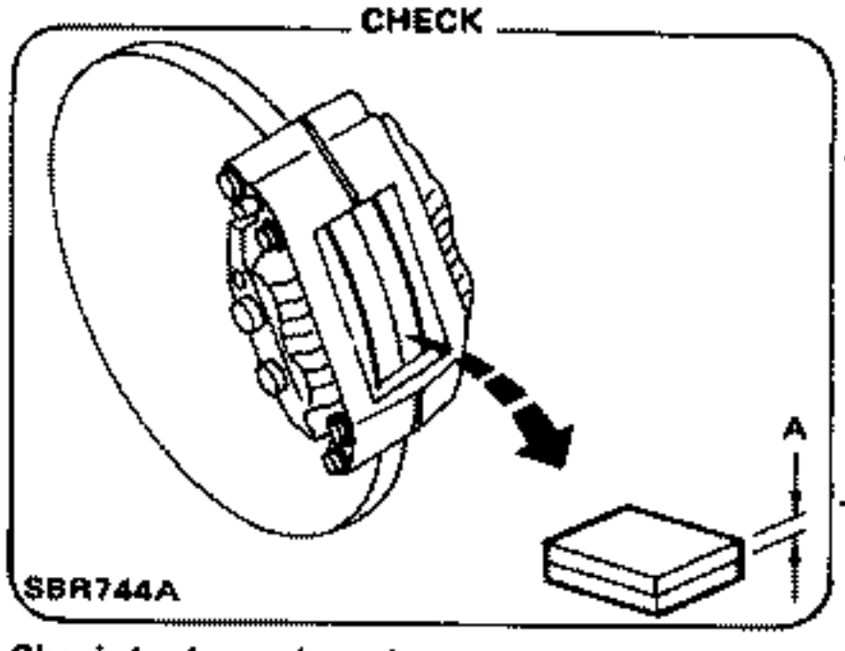

Check brake pads and rotor.
Refer to "Inspection" of FRONT and REAR DISC BRAKE.

N.G. → Replace malfunctioning parts.

Preliminary Check 2

CHECK

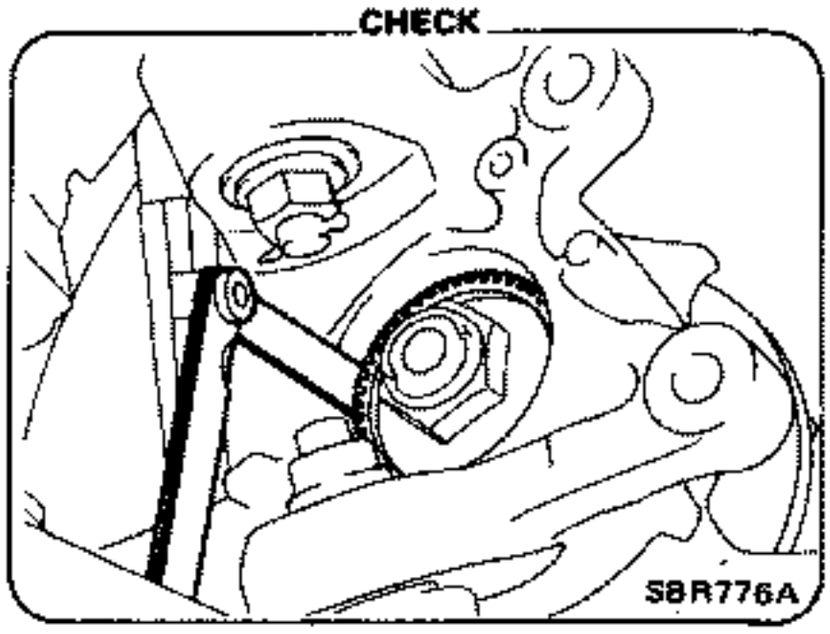

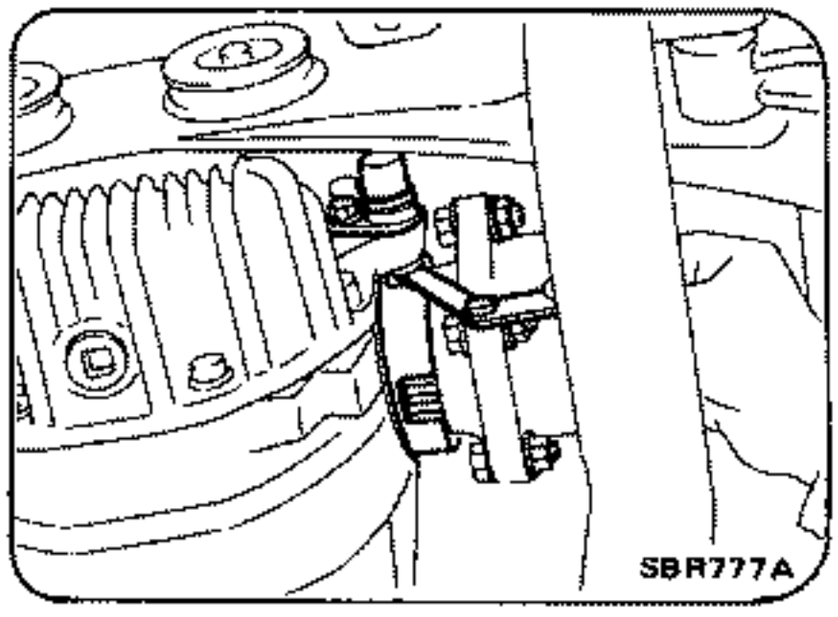

Check sensor clearance.

	Clearance mm (in)
Front wheel sensor	0.06 - 0.93 (0.0024 - 0.0366)
Rear sensor	0.18 - 1.15 (0.0071 - 0.0453)

N.G. → Check sensor for the following items:
- Dust, foreign materials, etc., at fastening portion
- Improper installation
- Breakage

O.K. → CHECK

N.G. → Repair or replace malfunctioning sensor.

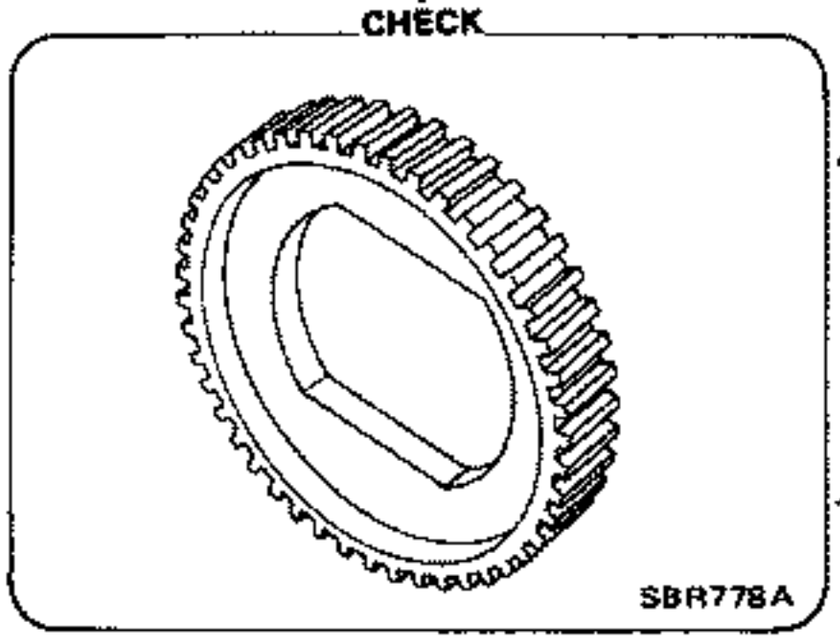

N.G. → Replace sensor rotor.

Check sensor rotor for teeth damage.

Preliminary Check 3, 4

Preliminary Check 3

CHECK

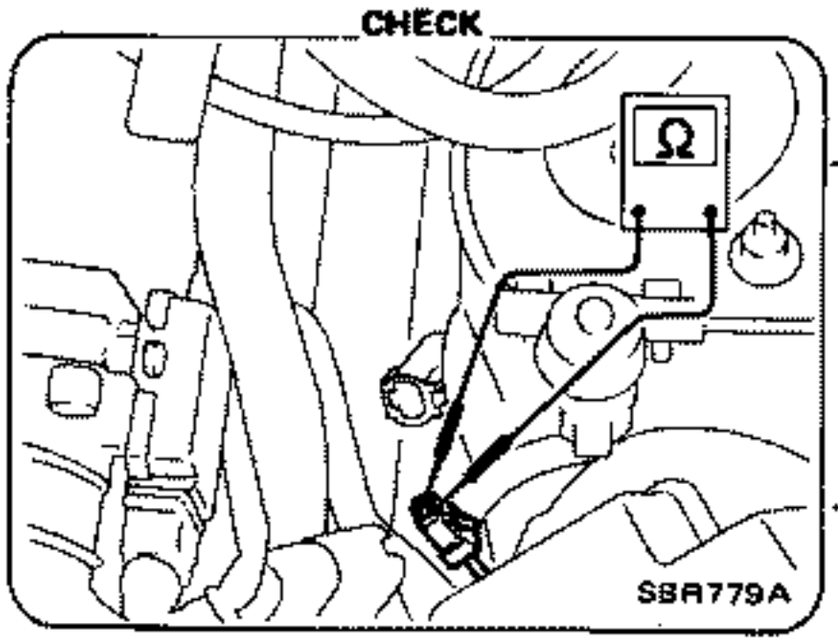

N.G. → Replace.

Measure each sensor resistance.

0.8 - 1.2 kΩ

O.K.

CHECK

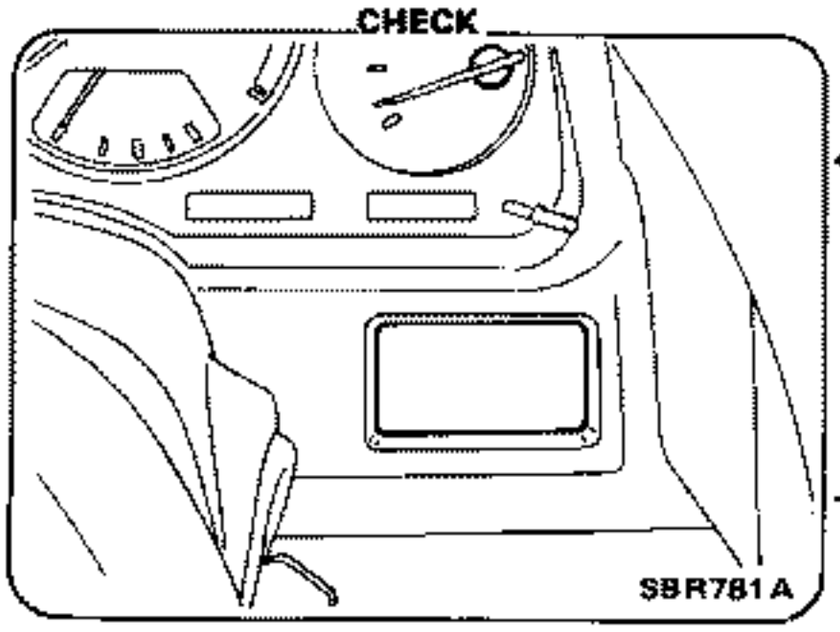

Check warning lamp for deactivation.

When engine starts, warning lamp deactivates.

O.K.

DRIVE

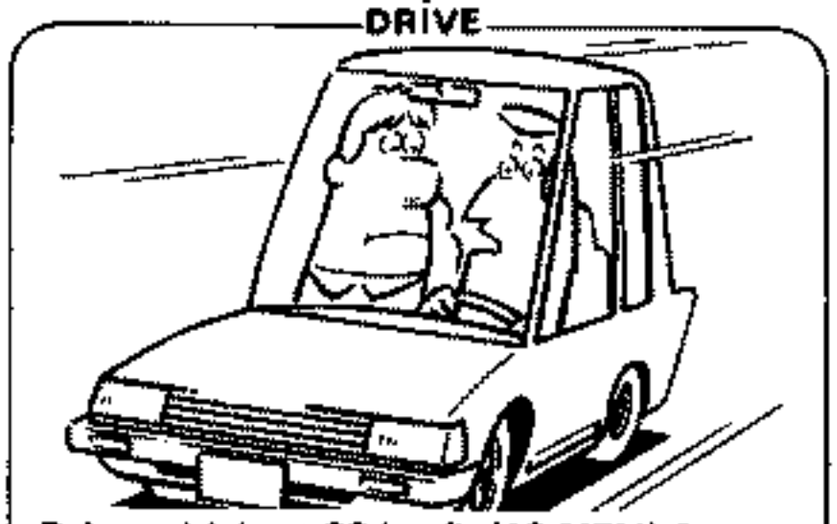

Drive vehicle at 30 km/h (19 MPH) for at least one minute. SBR530A

CHECK

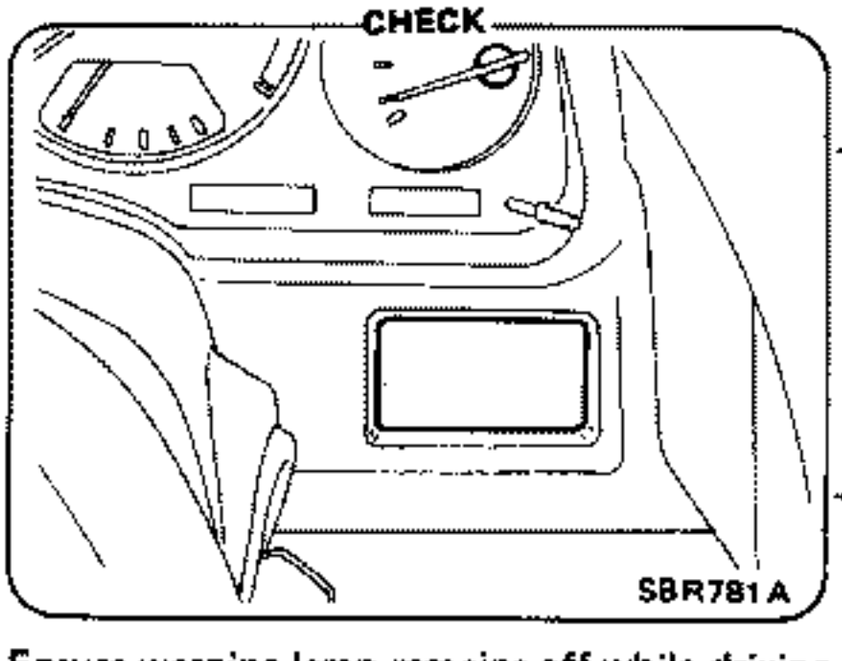

Ensure warning lamp remains off while driving.

N.G. → If Preliminary Check 2 is not performed and there is abnormal A.B.S. operation, perform Preliminary Check 2.

O.K.

Preliminary Check 4

CHECK

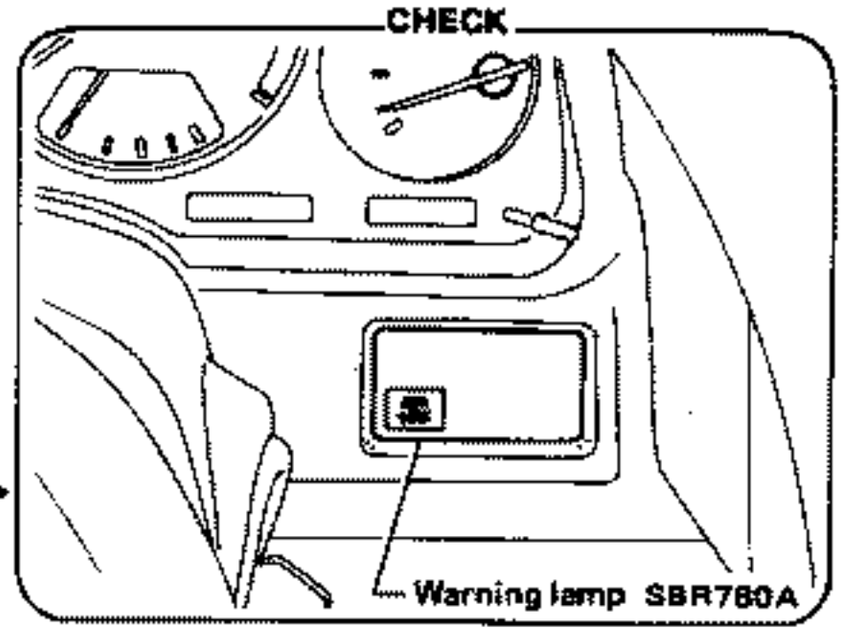

Check warning lamp activation.

When ignition switch is turned on, warning lamp turns on.

O.K.

N.G.

Check fuse.

Check bulb condition and remedy.

CHECK

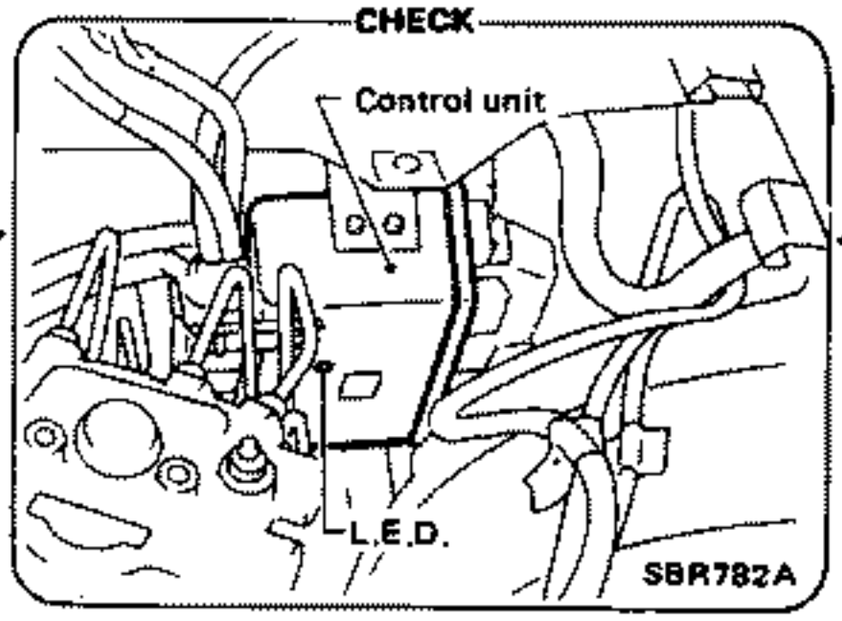

- Keep engine on and running.
- Count the number of L.E.D. flashes during 5 to 10 second "OFF" period.

Go to Self-diagnosis.

(See page BR-38.)

Self-diagnosis

CHECKING THE NUMBER OF L.E.D. FLASHES

When a problem occurs in the A.B.S., the warning light on the instrument panel comes on. As shown in the Table, the control unit performs self-diagnosis.
To obtain satisfactory self-diagnosing results, the vehicle must be driven above 30 km/h (19 MPH) for at least one minute before the self-diagnosis is performed. After the vehicle is stopped, the number of L.E.D. flashes is counted while the engine is running.
The L.E.D. is located on the control unit, identifying a malfunctioning part or unit by the number of flashes. Both the warning light and the L.E.D. persistently activate, even after a malfunctioning part or unit has been repaired, unless the ignition switch is turned "OFF". After repairs, turn the ignition switch "OFF". Then start the engine and drive the vehicle over 30 km/h (19 MPH) for at least one minute to ensure that the malfunctioning part or unit has been repaired properly.
If more than two circuits malfunction at the same time, the L.E.D. will flash to indicate one of the malfunctioning circuits. After the circuit has been repaired, the L.E.D. will then flash to indicate that the other circuit is malfunctioning.

No. of L.E.D. flashes	Malfunctioning part or unit	Diagnostic Procedure
1	Left front actuator solenoid circuit	Diagnostic Procedure 6
2	Right front actuator solenoid circuit	
3 or 4	Rear actuator solenoid circuit	
5	Left front wheel sensor circuit	Diagnostic Procedure 7
6	Right front wheel sensor circuit	
7 or 8	Rear wheel sensor circuit	
9	Motor and motor relay	Diagnostic Procedure 8
10	Solenoid valve relay	Diagnostic Procedure 9
16 or continuous	Control unit	Diagnostic Procedure 10
Warning activates and L.E.D. "OFF"	Power supply or ground circuit for control unit	Diagnostic Procedure 11

Example

Improper operation of left front rotor sensor circuit

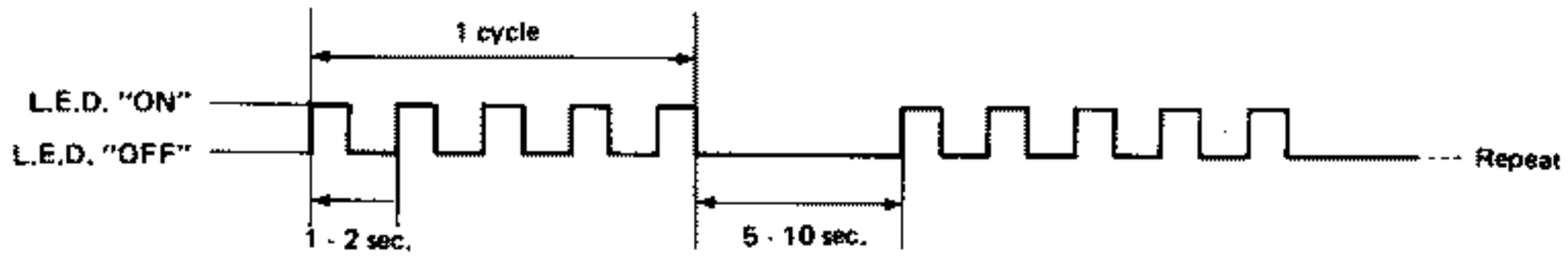

SBR531A

Component Parts Location

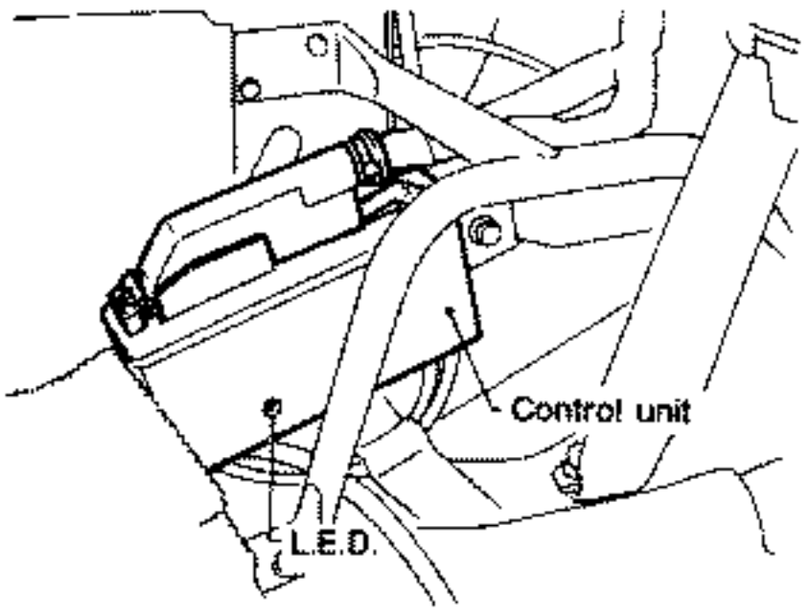

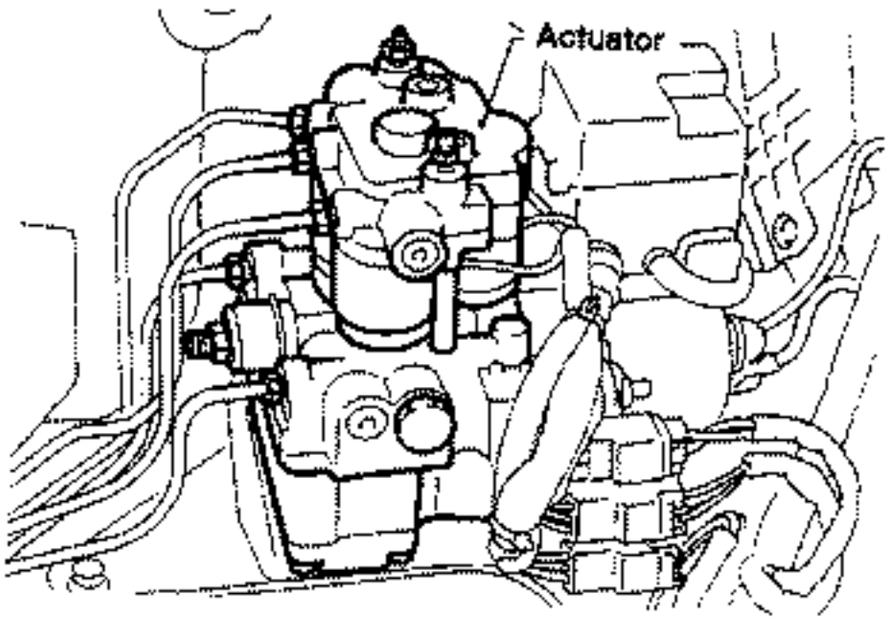

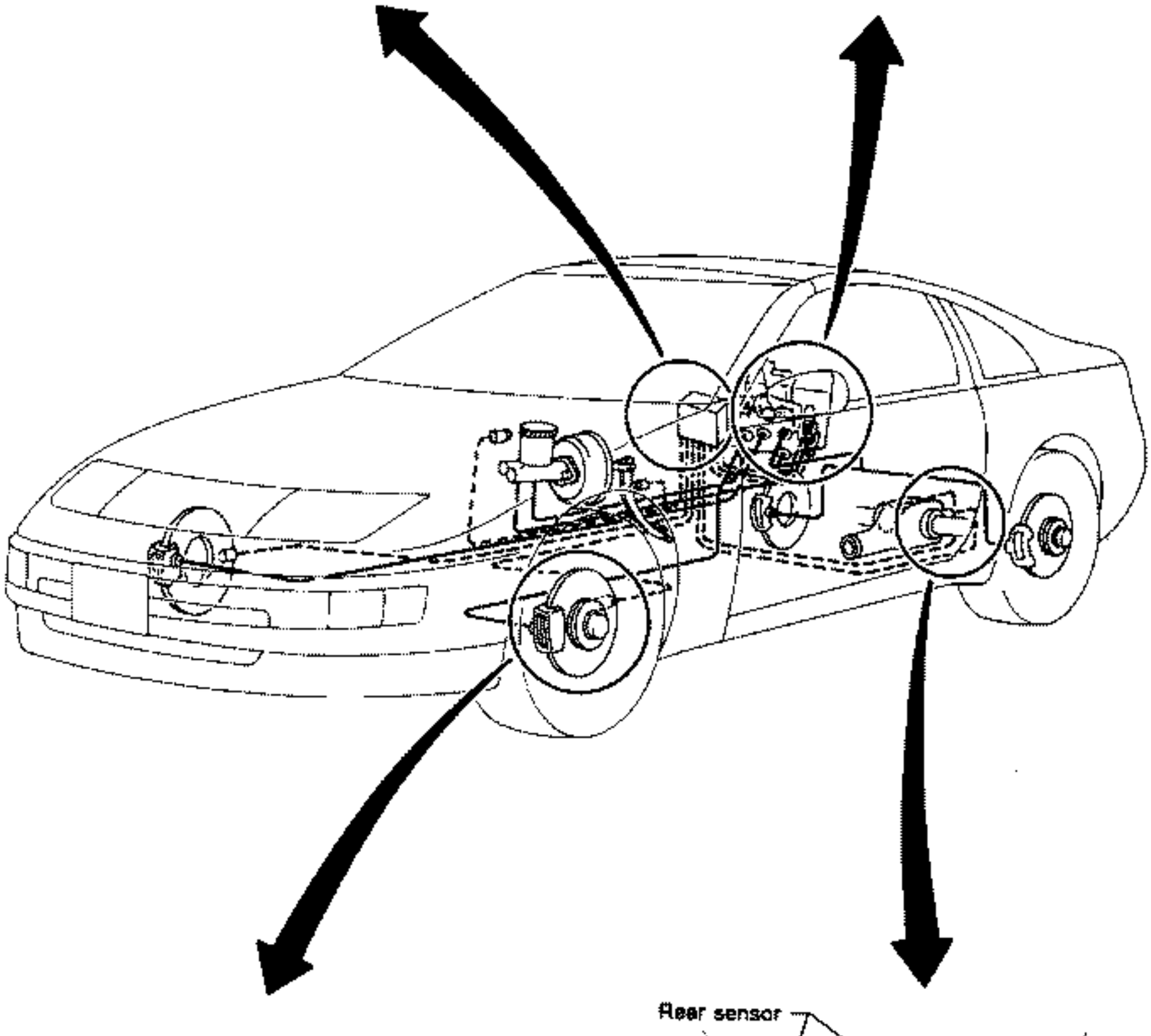

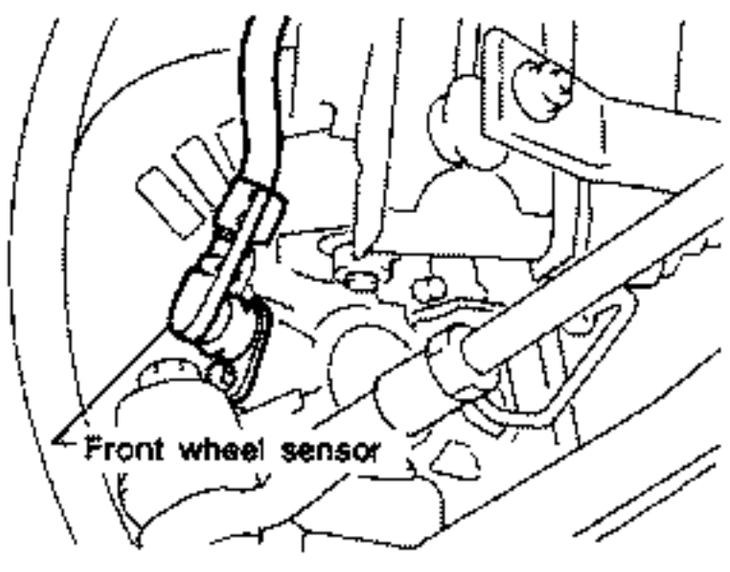

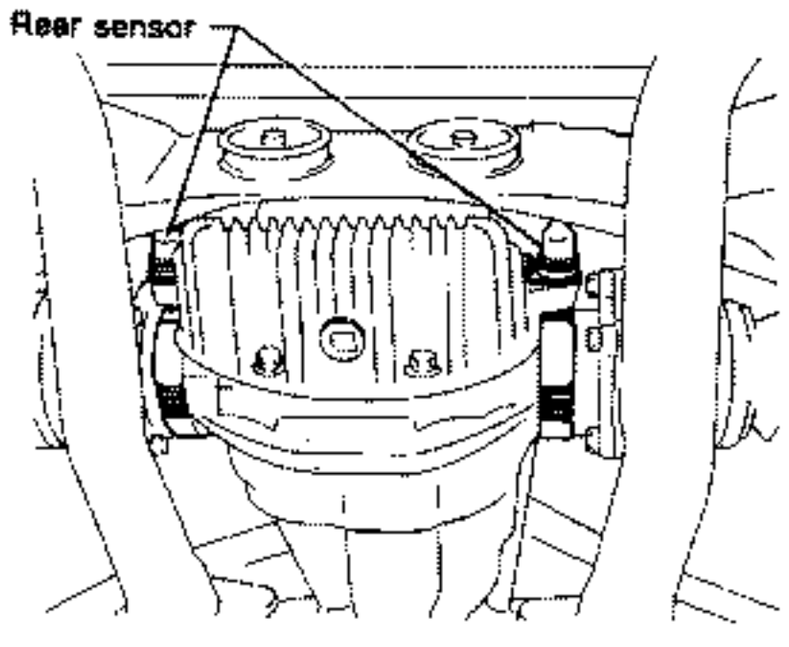

SBR162B

Harness Connector Location

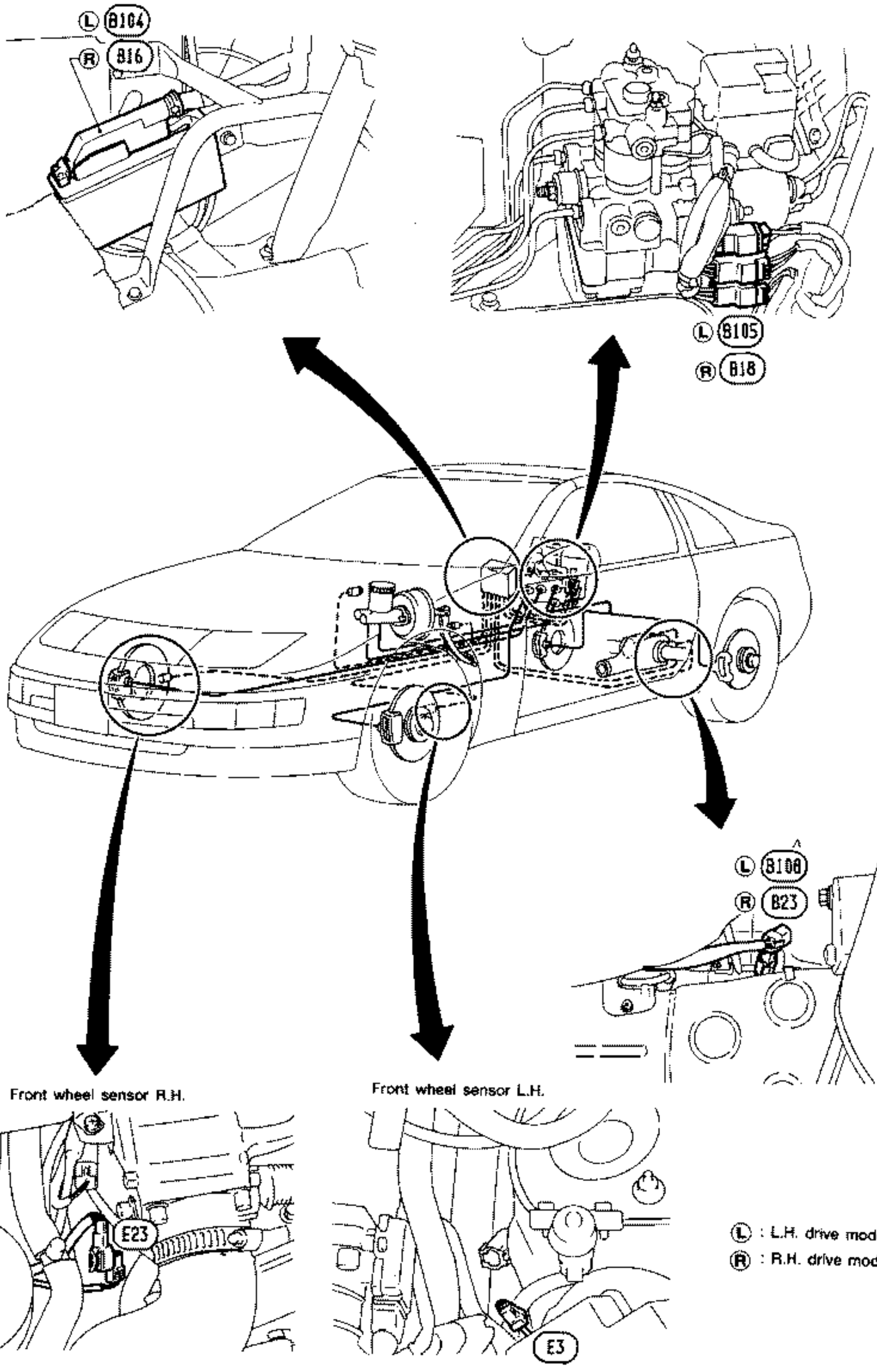

L : L.H. drive model
R : R.H. drive model

SBR183B

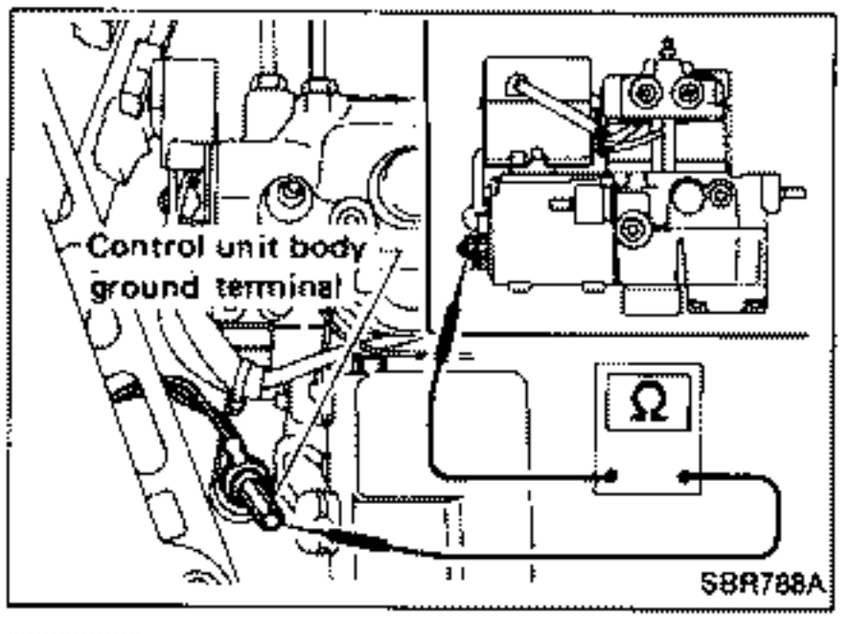

Ground Circuit Check

ACTUATOR MOTOR GROUND

- Check resistance between both terminals.
  Resistance: approx. 0Ω

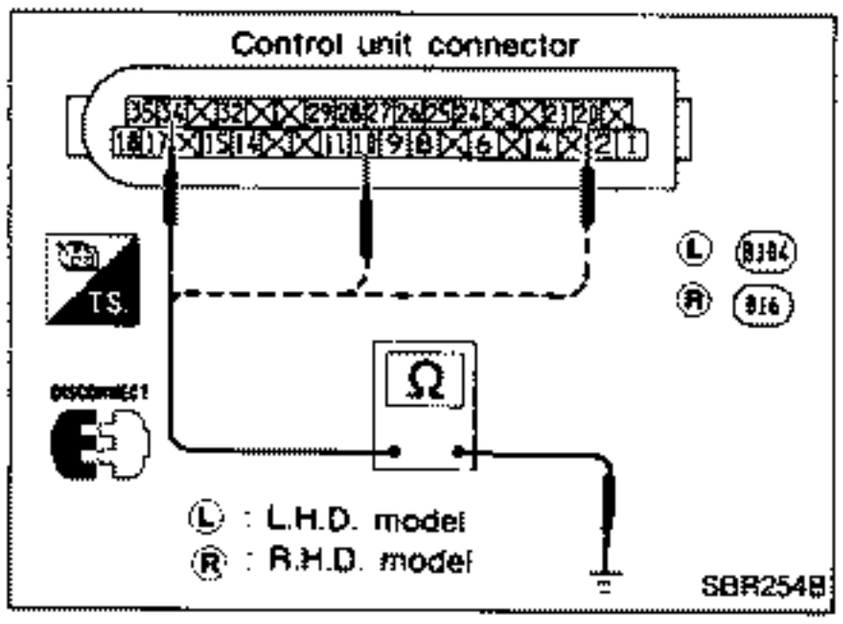

CONTROL UNIT GROUND

- Check resistance between both terminals.
  Resistance: 0Ω

Circuit Diagram for Quick Pinpoint Check

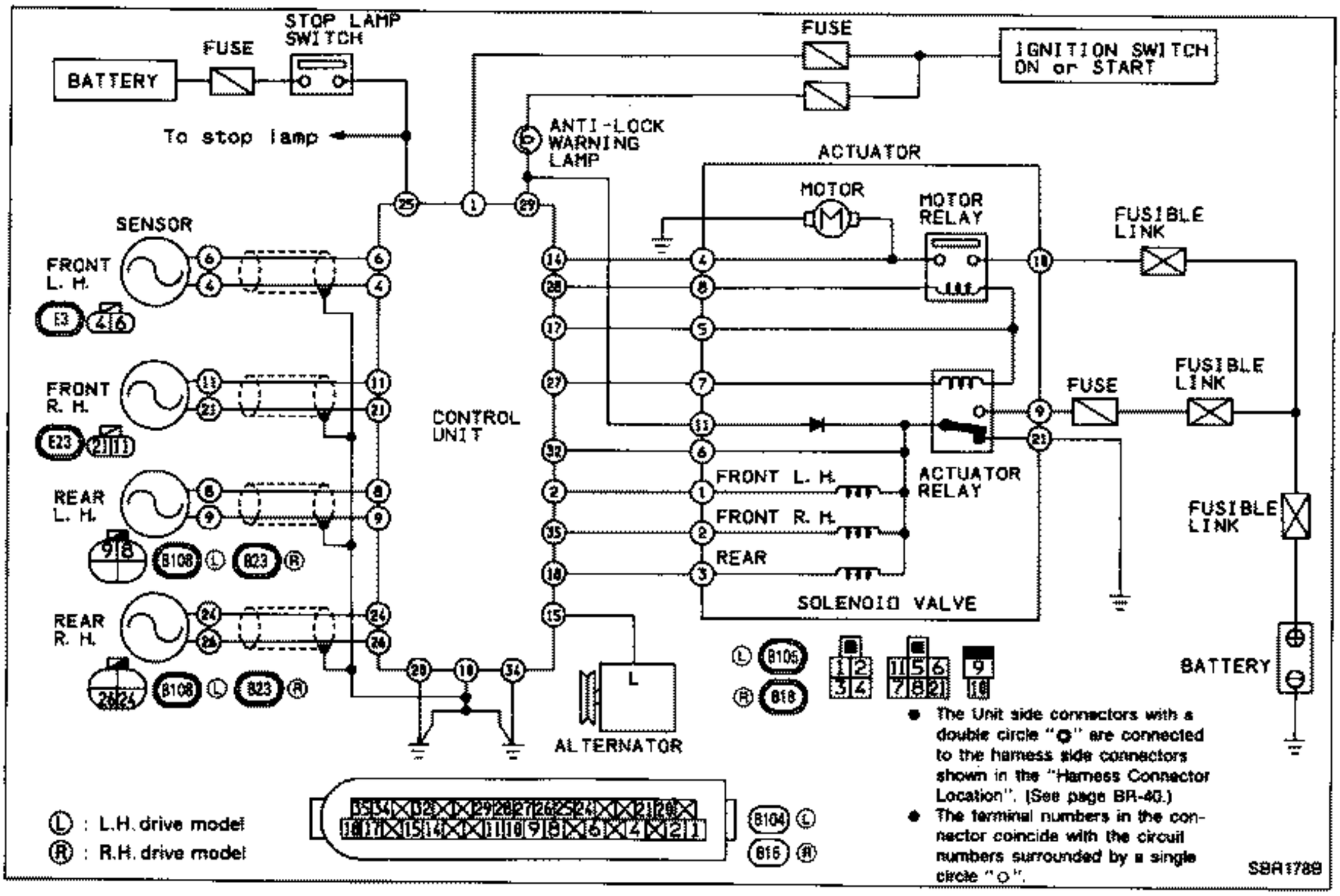

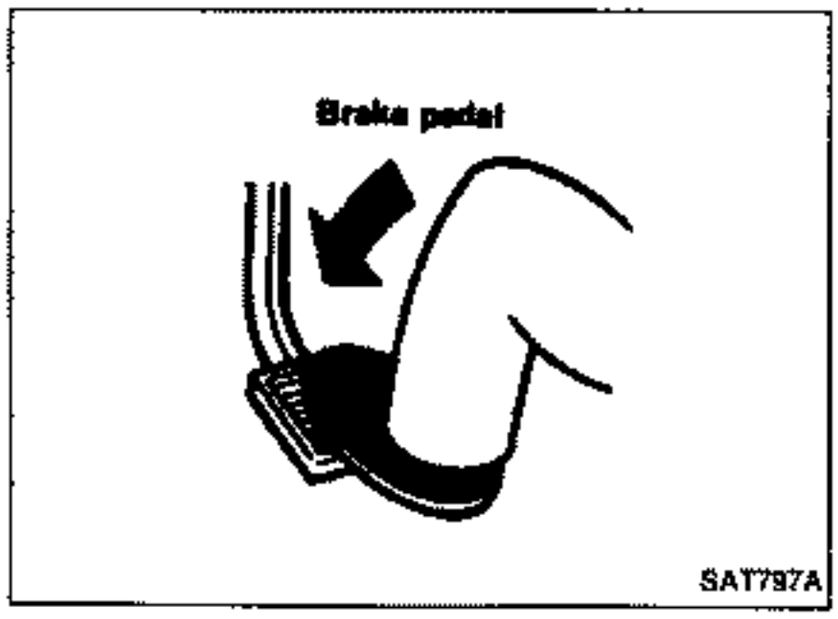

Diagnostic Procedure 1

SYMPTOM: Pedal vibration and noise

Refer to worksheet result.

Check whether the symptom appears only when brake is applied suddenly.
- Yes → When brake is normally applied, A.B.S. works and produces pedal vibration or noise.
- No ↓

Check whether the symptom appears only when engine is started.



- Yes → Refer to Preliminary Check 4 result.
- No ↓

Check whether the symptom appears only when the vehicle speed is within 10 km/h (6 MPH) after starting engine.
- Yes → Check whether the symptom disappears within 5 seconds.
  - No → Ⓐ
  - Yes → A.B.S. may sometimes operate when load is high and voltage is low due to insufficient alternator output.
- No ↓

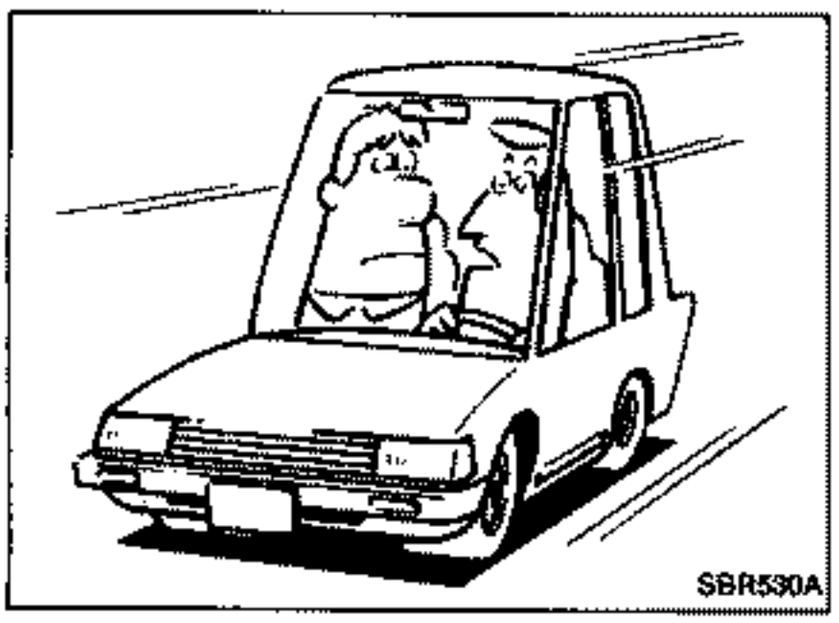
SBR530A

Check whether the symptom appears while the vehicle is being driven.
- No → Ⓐ
- Yes ↓

Check whether the symptom appears when brake is applied gradually.
- No (Appears when brake is not applied.) → Check if there are any conditions, among those listed below, when symptom appears.
  - ● Shifting
  - ● Operating clutch
  - ● Passing over bumps/potholes
  - No → Ⓐ
  - Yes → Under these conditions individual wheel speed can change suddenly. This may sometimes cause the A.B.S. to operate.
- Yes ↓

Ⓑ

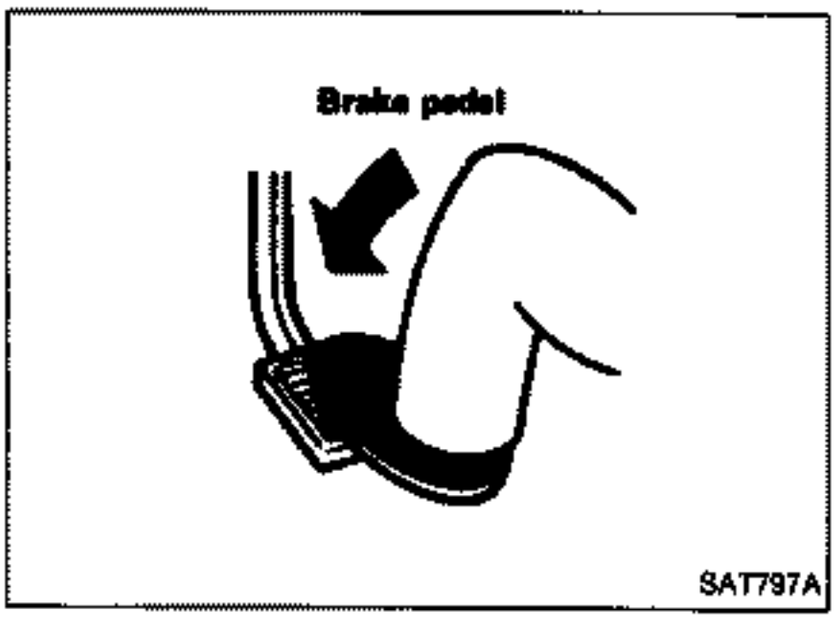

Diagnostic Procedure 1 (Cont'd)

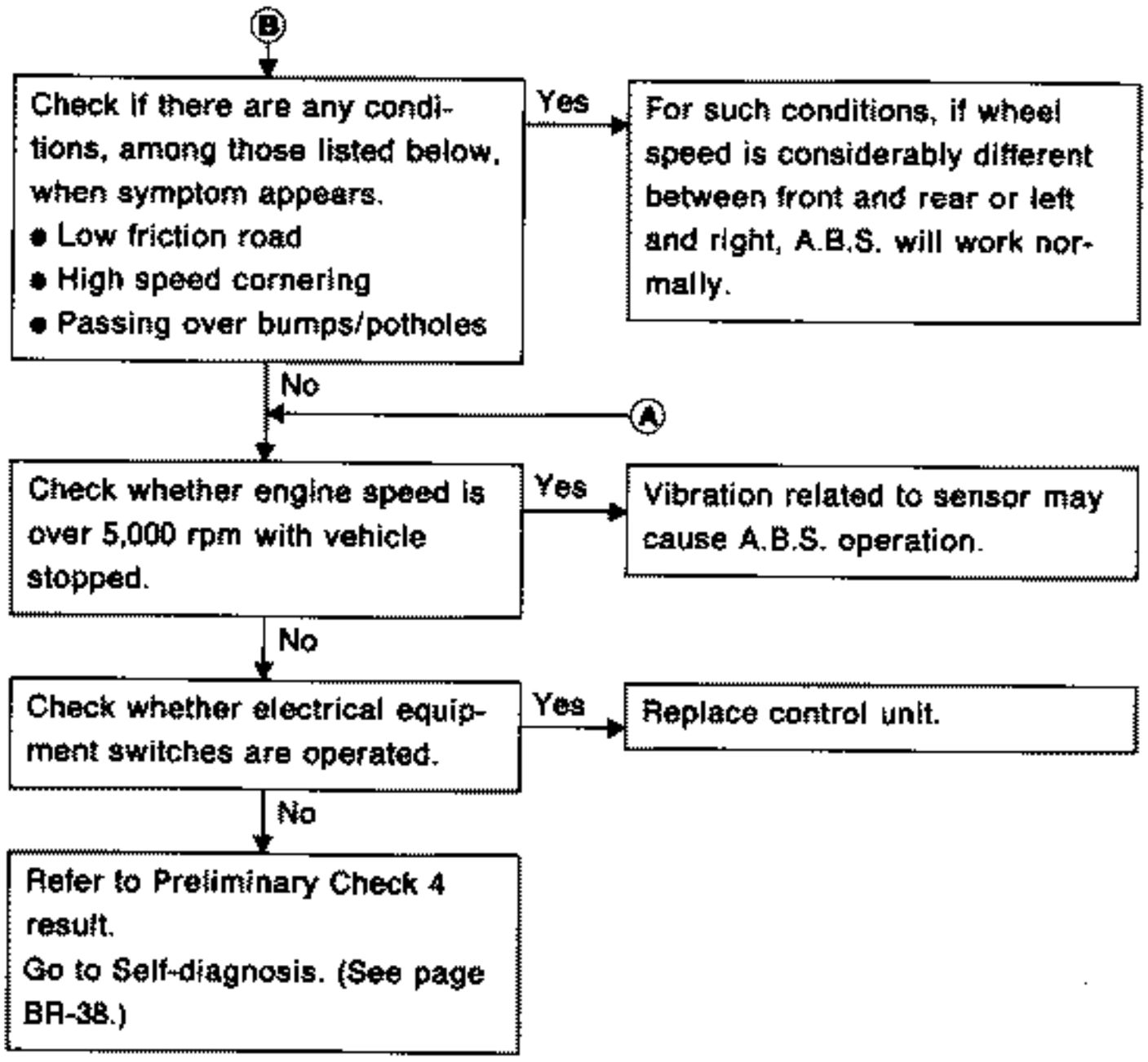

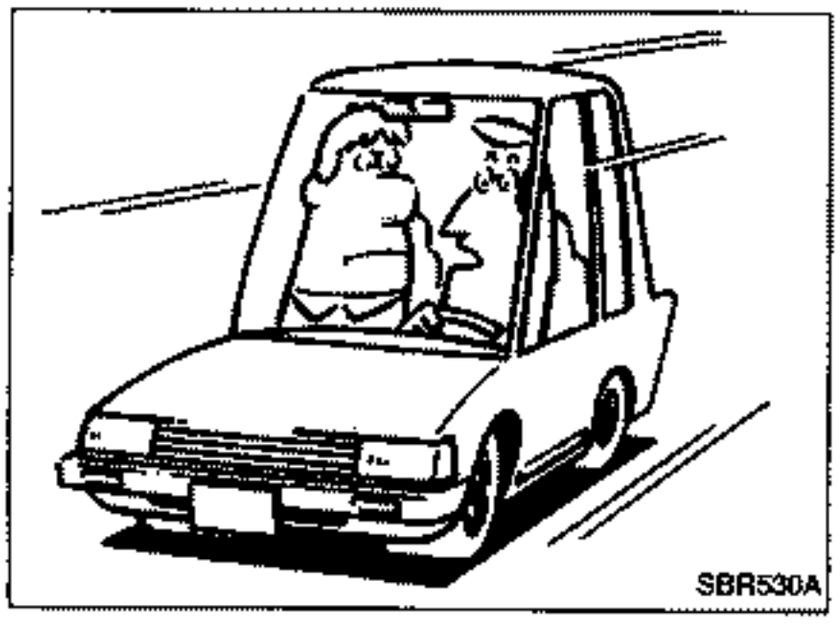
SBR530A

Diagnostic Procedure 2

SYMPTOM: Long stopping distance

Refer to worksheet results.

Check if road condition is slippery with snow or gravel.
- Yes → Stopping distance may be longer than vehicles which are not equipped with A.B.S.
- No ↓

Disconnect actuator connector and check whether stopping distance is still long.
- Yes → Refer to Preliminary Check 4 result. Go to Self-diagnosis. (See page BR-38.)
- No ↓

Perform Preliminary Check 1 and air bleeding.

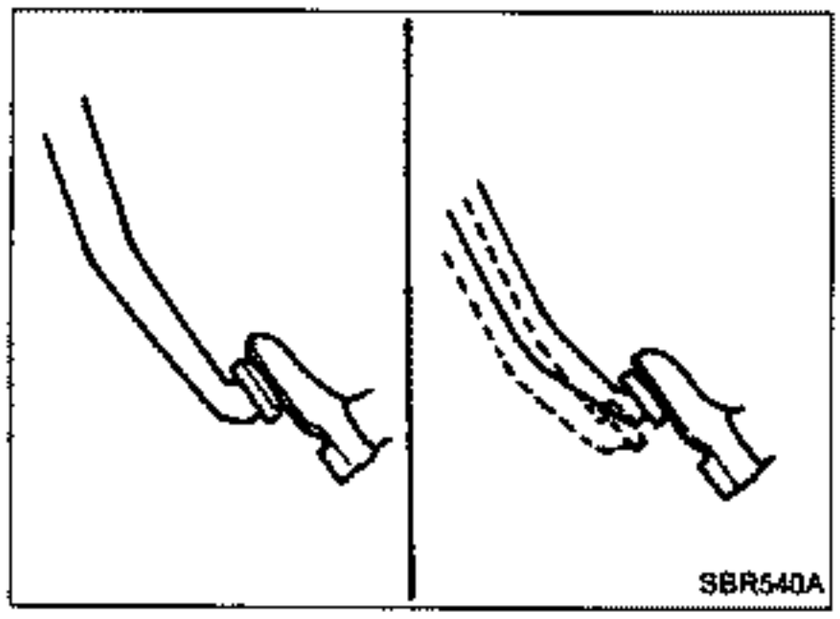
SBR540A

Diagnostic Procedure 3

SYMPTOM: Abnormal pedal action

Refer to worksheet results.

Check whether brake pedal stroke is abnormally large.
- Yes → Vehicle equipped with A.B.S. may have a tendency for large pedal strokes.
- No ↓

Check that brake pedal force is firm but brake is effective.
- Yes → Normal condition.
- No ↓

A

Disconnect actuator connector and check whether brake is effective.
- Yes → Refer to Preliminary Check 4 result. Go to Self-diagnosis. (See page BR-38.)
- No ↓

Perform Preliminary Check 1.

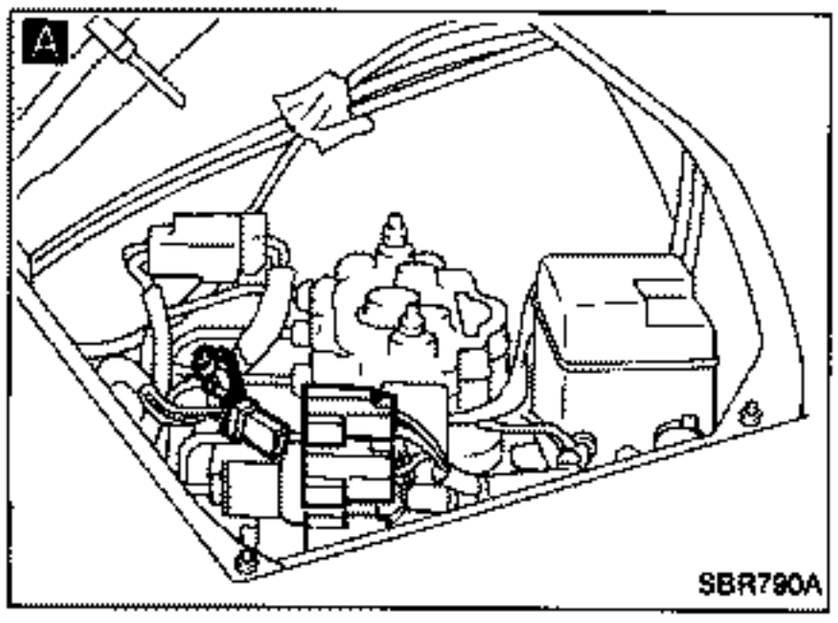

SBR790A

Diagnostic Procedure 4

SYMPTOM: A.B.S. doesn't work.

Refer to worksheet results.

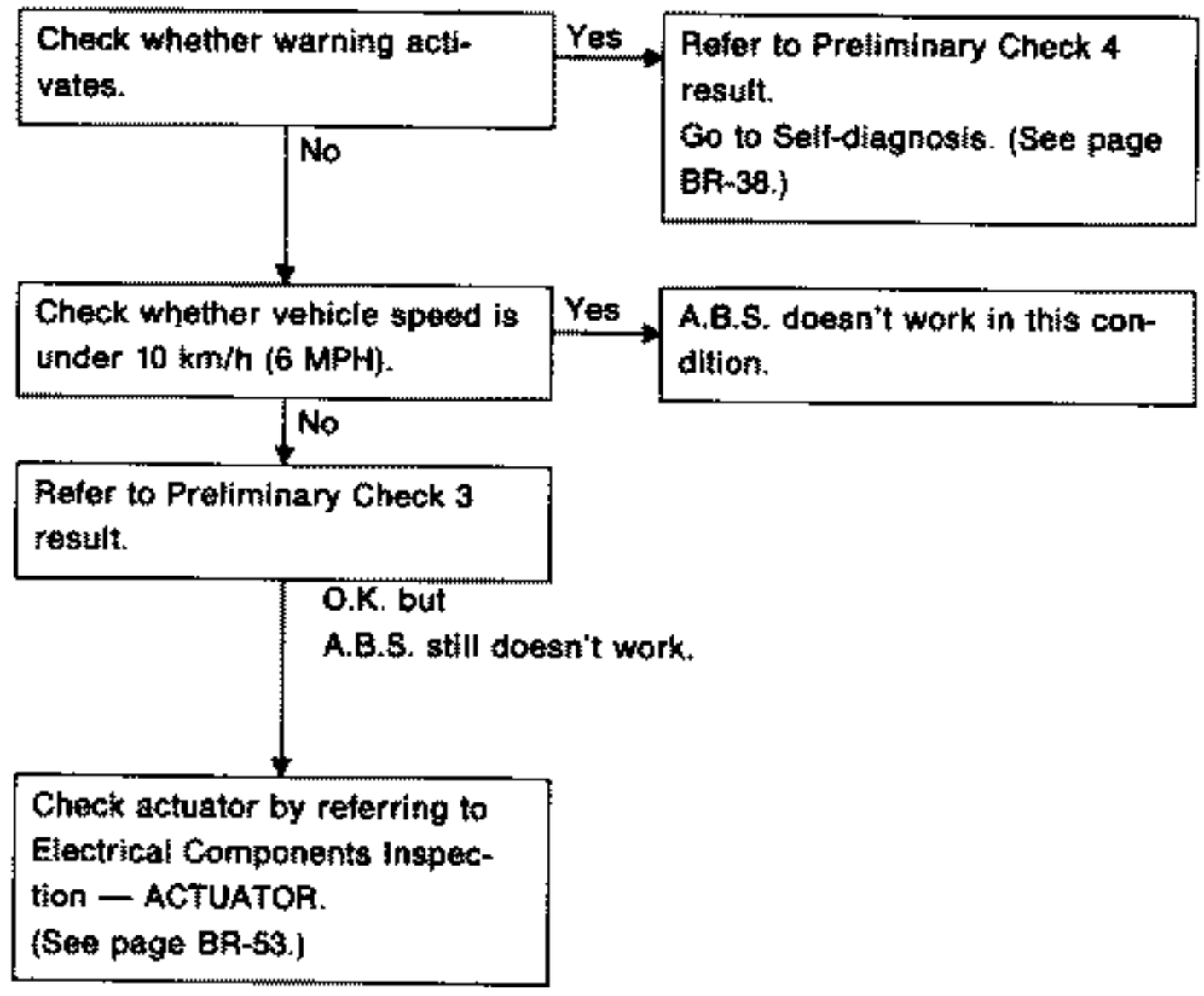

Diagnostic Procedure 5

SYMPTOM: A.B.S. works but warning activates.

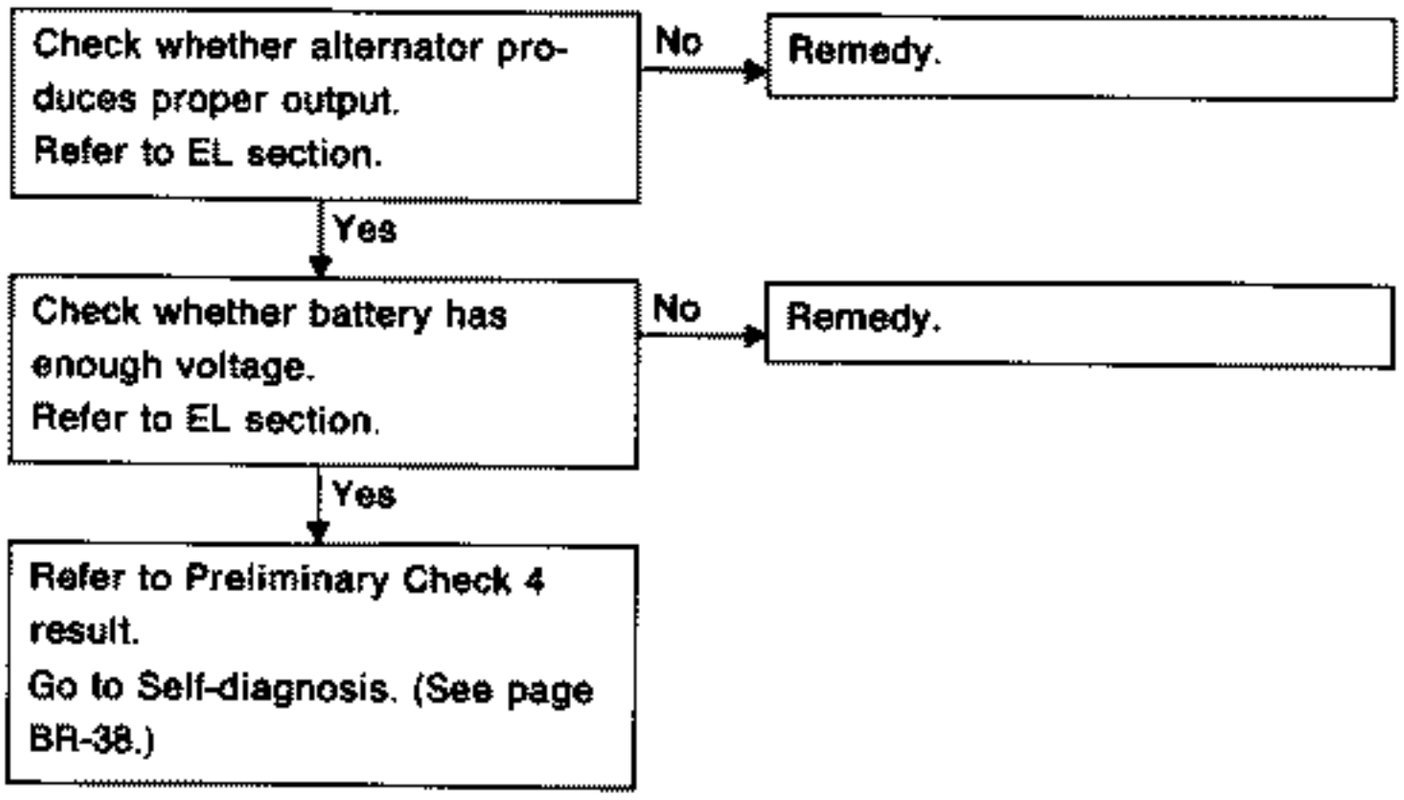

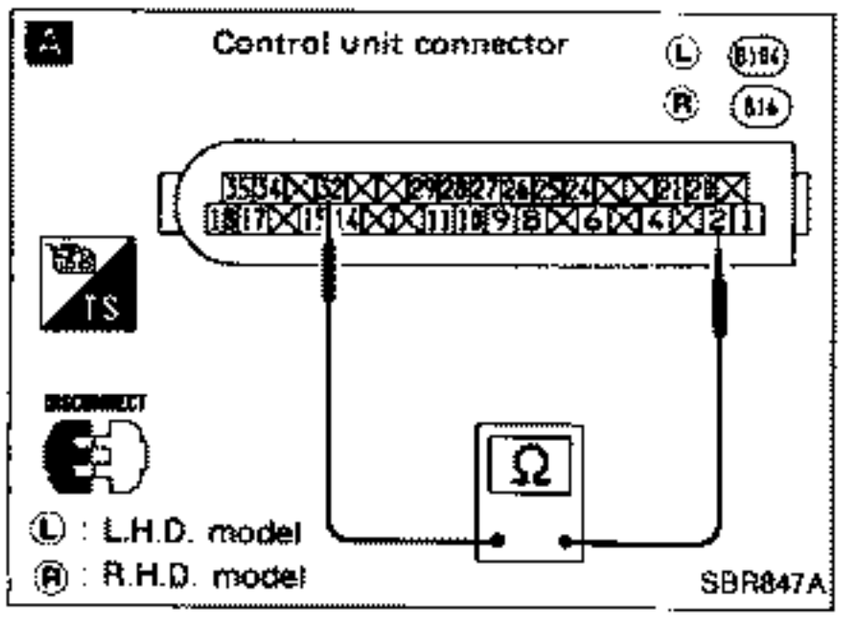

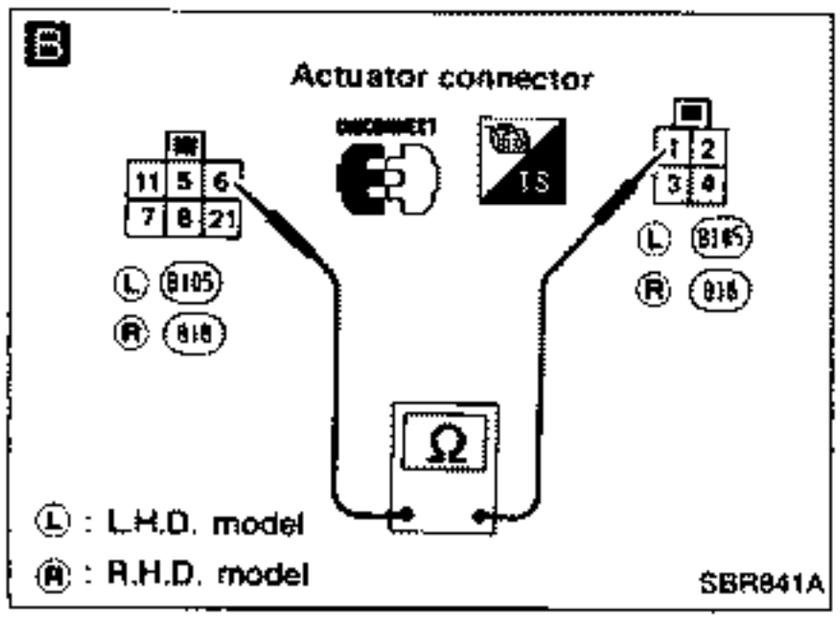

Diagnostic Procedure 6

ACTUATOR SOLENOID (L.E.D. flashing number 1 - 4)

INSPECTION START
Remove battery negativeterminal connector.

↓

A

CHECK SOLENOID VALVE RESISTANCE.
Disconnect control unit connector.
Check resistance between controlunit connector (vehicle side) terminals.
Flashing number 1:
Terminals ㉜ and ②
Flashing number 2:
Terminals ㉜ and ㉟
Flashing number 3 or 4:
Terminals ㉜ and ⑱
Resistance:0.7 - 1.6Ω

O.K. → Replace controlunit.

↓ N.G.

B

Disconnect actuator connector.
Checkresistance between actuator connector (actuator side) terminals.
Flashing number 1:
Terminals ⑥ and ①
Flashing number 2:
Terminals ⑥ and ②
Flashing number 3 or 4:
Terminals ⑥ and ③
Resistance: 0.7 - 1.6Ω

O.K. → Repair harnessbetween actuator connector and control unit connector.

↓ N.G.

Replace actuator.

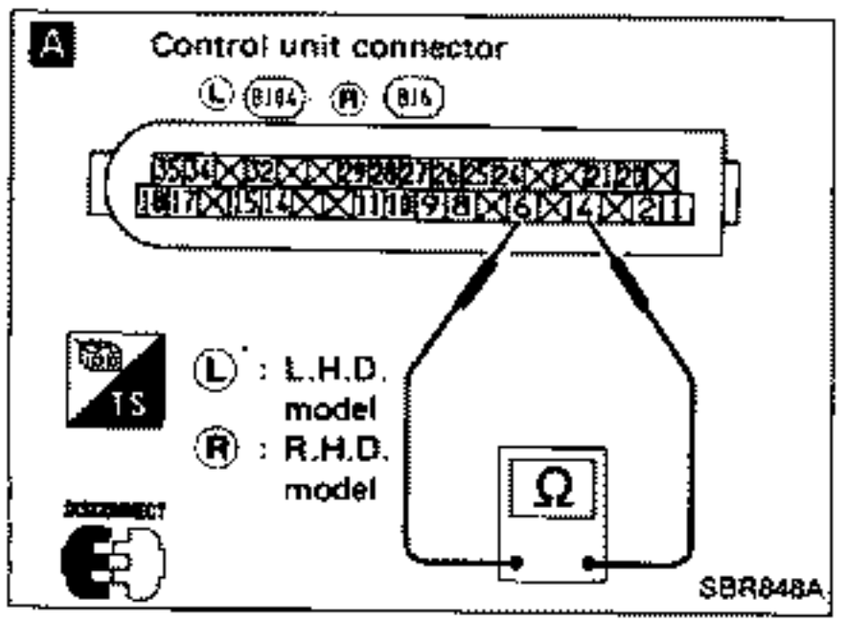

Diagnostic Procedure 7

WHEEL SPEED SENSOR (L.E.D. flashing number 5 - 8)

INSPECTIONSTART
Remove battery negative terminal connector.

A

CHECK SPEED SENSOR RESISTANCE.
Disconnectcontrol unit connector.
Check resistance between control unitconnector (vehicle side) terminals.
Flashing number 5:
Terminals ④ and ⑥
Flashing number 6:
Terminals ⑪ and ㉑
Flashing number 7 or 8:
Terminals ⑦ and ⑨
Resistance:0.8 - 1.2 kΩ

O.K. → Replace controlunit.

N.G.

Refer to Preliminary Check 3 result.
Checkwhether sensor has 0.8 - 1.2 kΩ resistance.

N.G. → Replace sensor.

O.K.

Repair harness between sensor connector andcontrol unit connector.

Diagnostic Procedure 8

ACTUATOR MOTOR RELAY (L.E.D. flashing number 9)

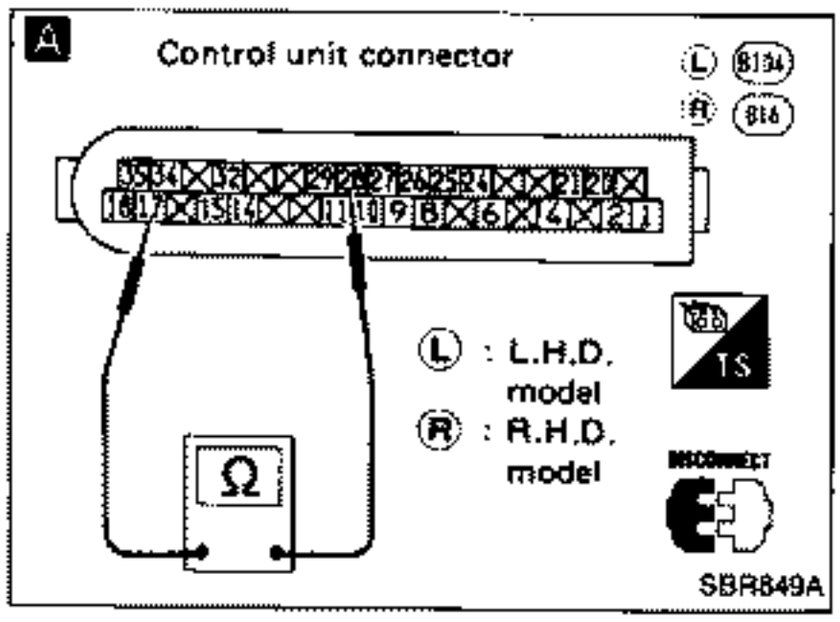

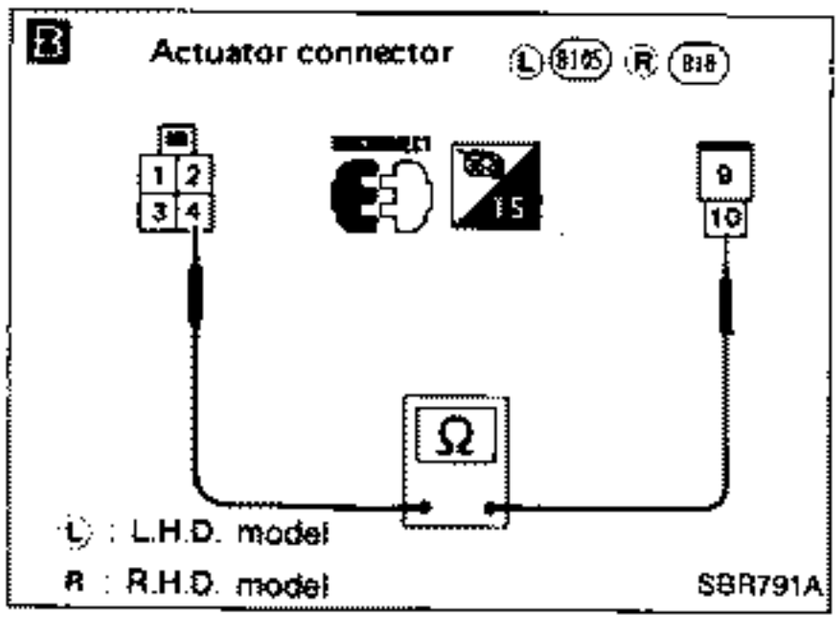

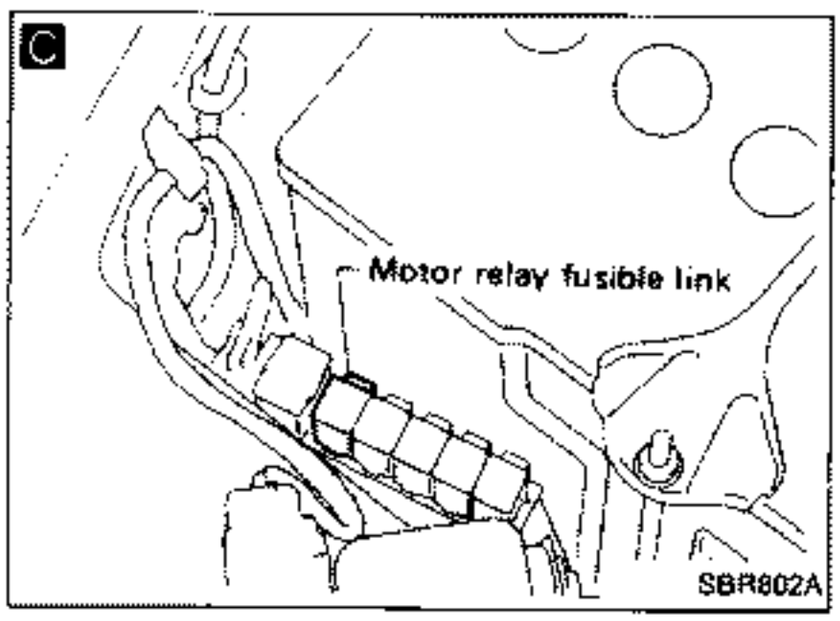

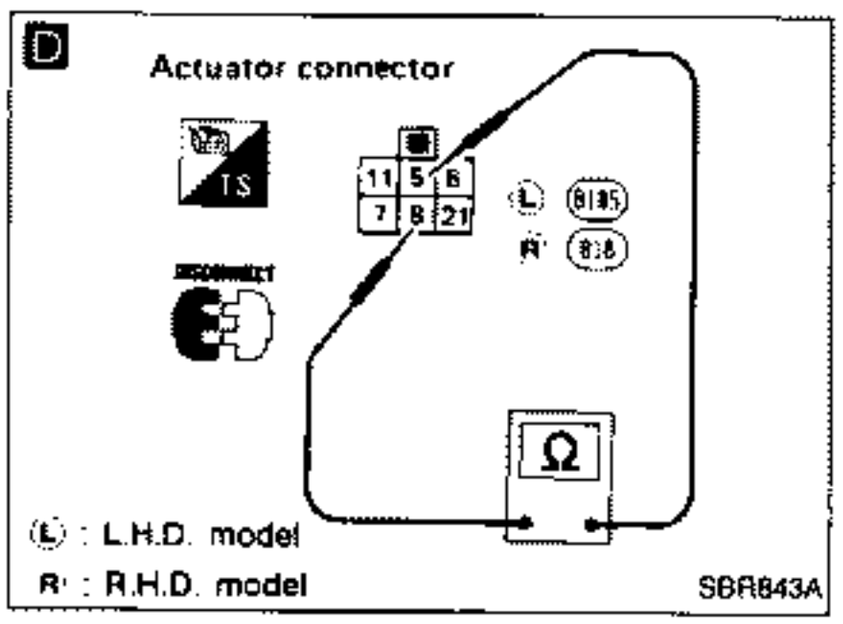

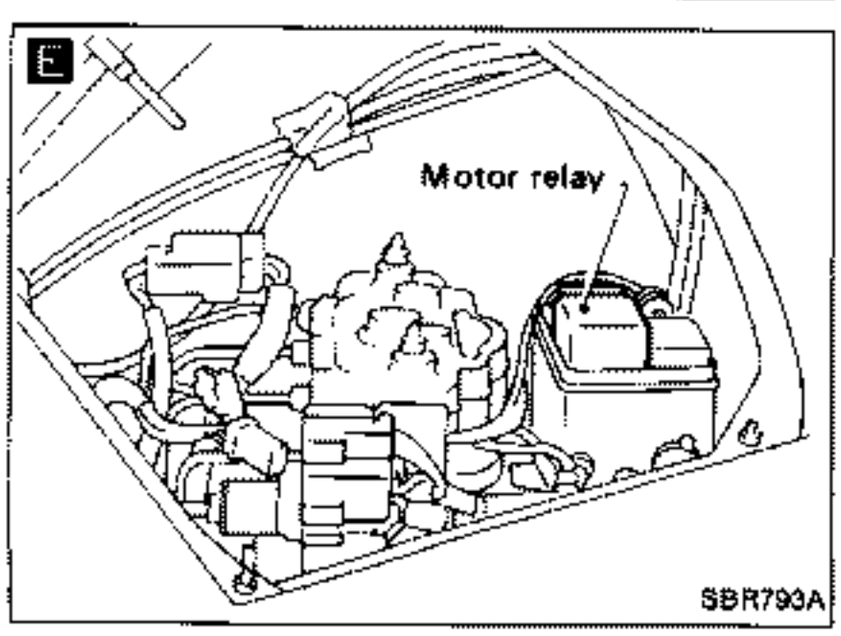

INSPECTION START
Remove battery negativeterminal connector.

A

CHECK MOTOR RELAY SOLENOID RESISTANCE.
Disconnect control unit connector.
Check resistance between controlunit connector (vehicle side) terminals ⑰ and ㉘.
Resistance: 45 - 55Ω

N.G. → **D**

Disconnect actuatorconnector.
Check resistance between actuator connector (actuatorside) terminals ⑧ and ⑤.
Resistance: 45 - 55Ω

O.K. → Repair harness between actuator and controlunit.

N.G. → **E**

Replace motor relay.

O.K.

B

CHECK MOTOR RELAY DEACTIVATION.
Disconnectactuator connector.
Check continuity between actuator connector(actuator side) terminals ④ and ⑩.

Yes → **E**

Replace motor relay.

No

C

Check if motor's fusible link is blown.

No → Perform ElectricalComponents Inspection — ACTUATOR. (See page BR-53.)

O.K. → Replace control unit.

N.G. → Replace actuator.

Yes → Replace fusible link.

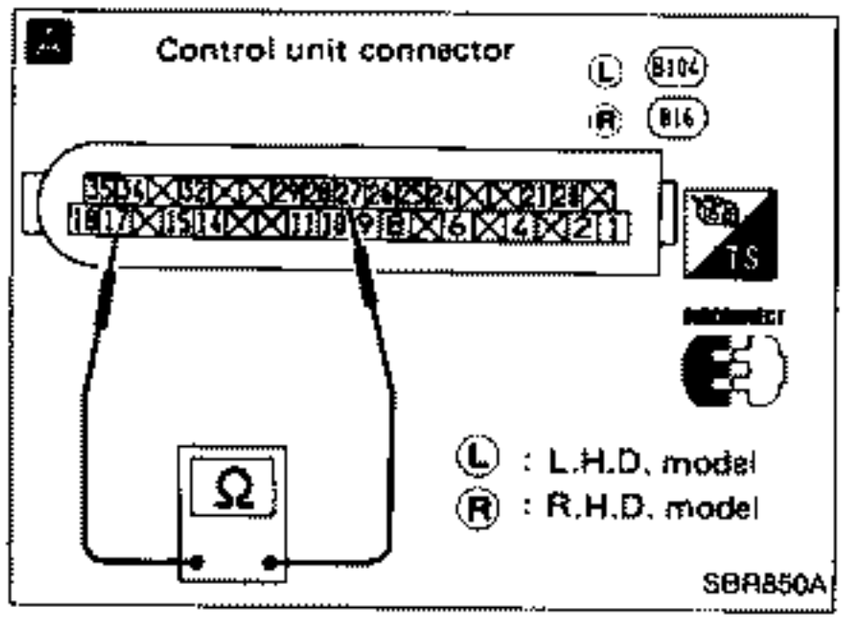

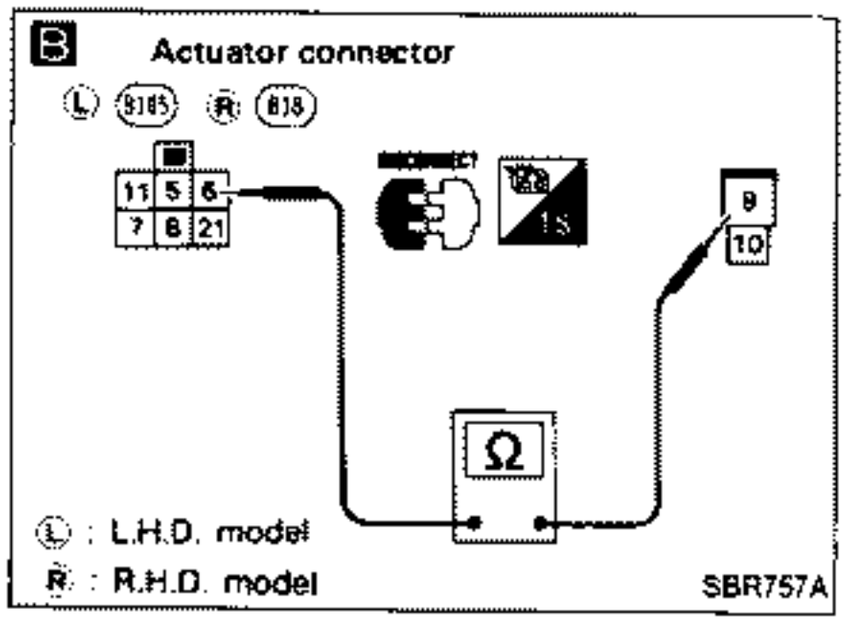

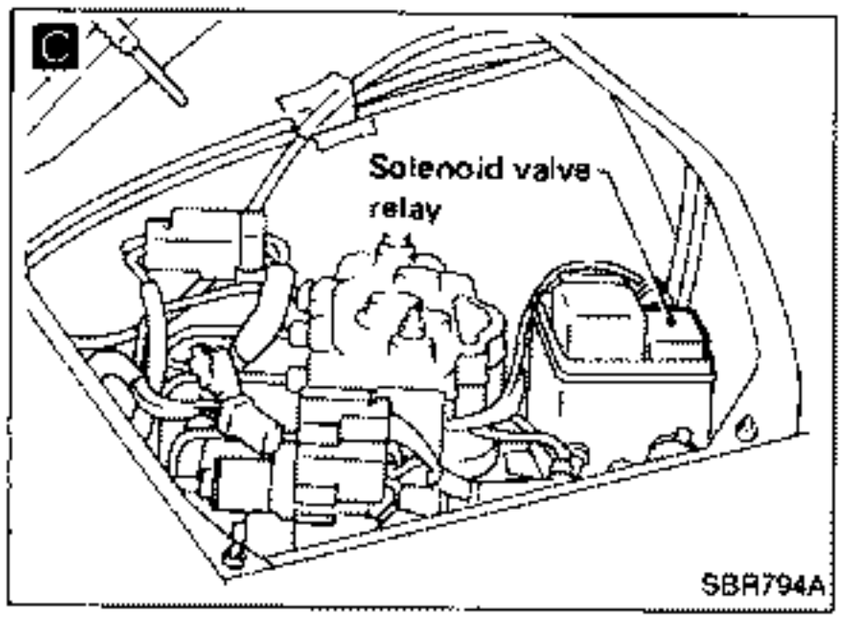

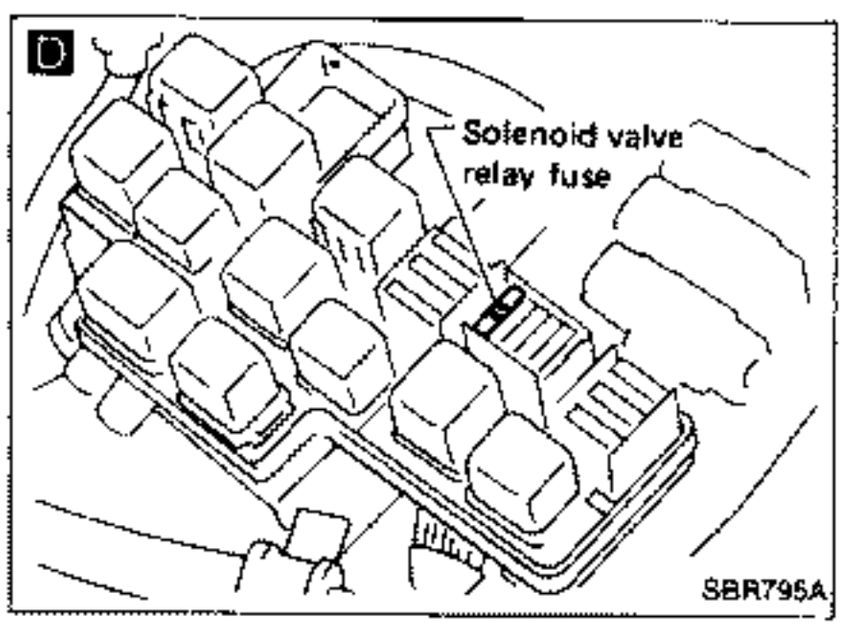

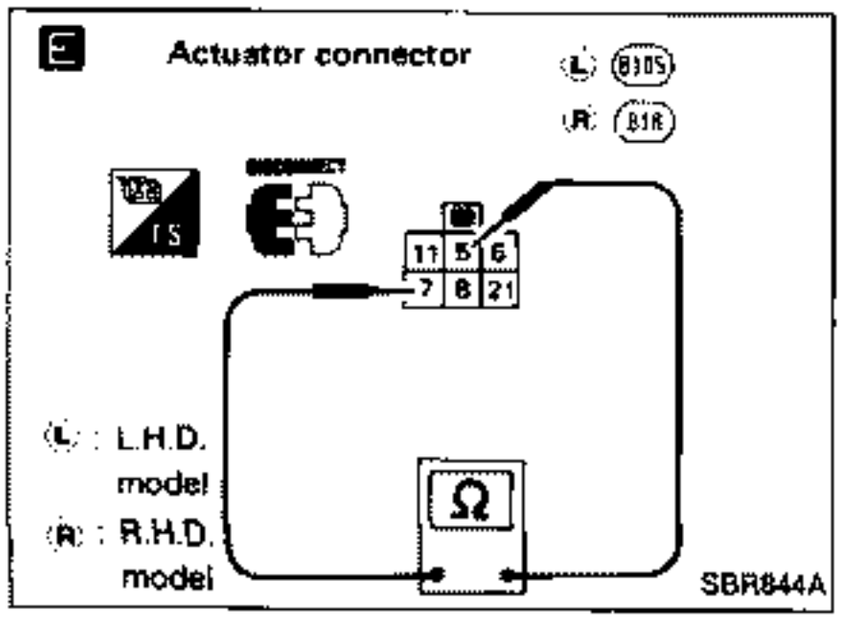

Diagnostic Procedure 9

ACTUATOR SOLENOID VALVE RELAY (L.E.D. flashing number 10)

INSPECTION START
Remove battery negativeterminal connector.

CHECK SOLENOID VALVE RELAY RESISTANCE.
Disconnect control unit connector.
Check resistance between controlunit connector (vehicle side) terminals (27) and (17).
Resistance: 80 - 90Ω

N.G. → Check resistancebetween actuator connector (actuator side) terminals (7) and (5).
Resistance: 80 - 90Ω

O.K. → Repair harness between actuator and controlunit.

N.G. → Replace solenoid valve relay.

O.K.

CHECK SOLENOID VALVE RELAY MOVEMENT.
Disconnect actuator connector.
Check continuity between actuatorconnector (actuator side) terminals (6) and (9).

Yes → Replace solenoid valverelay.

No

Check if solenoid valve relay fuse is blown.

No → Perform ElectricalComponents Inspection — ACTUATOR. (See page BR-53.)

Yes

Replace fuse.

N.G. → Replace control unit.

O.K.

Replace actuator.

Diagnostic Procedure 10

CONTROL UNIT (L.E.D. flashing number 16)

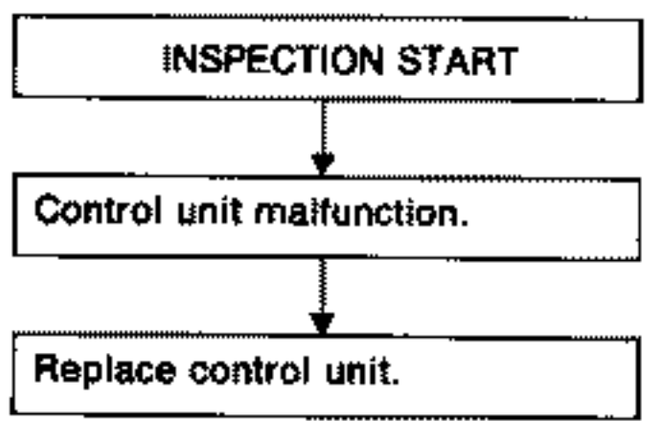

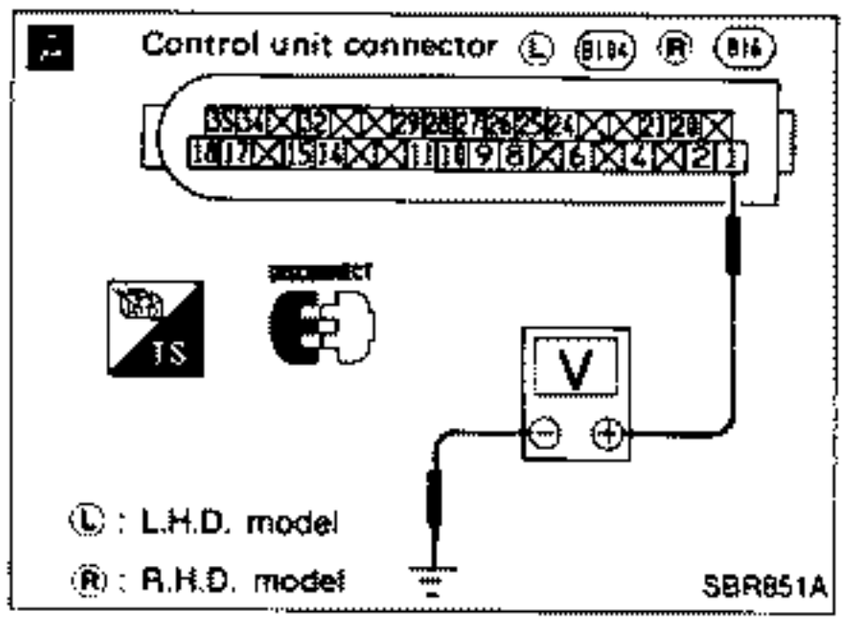

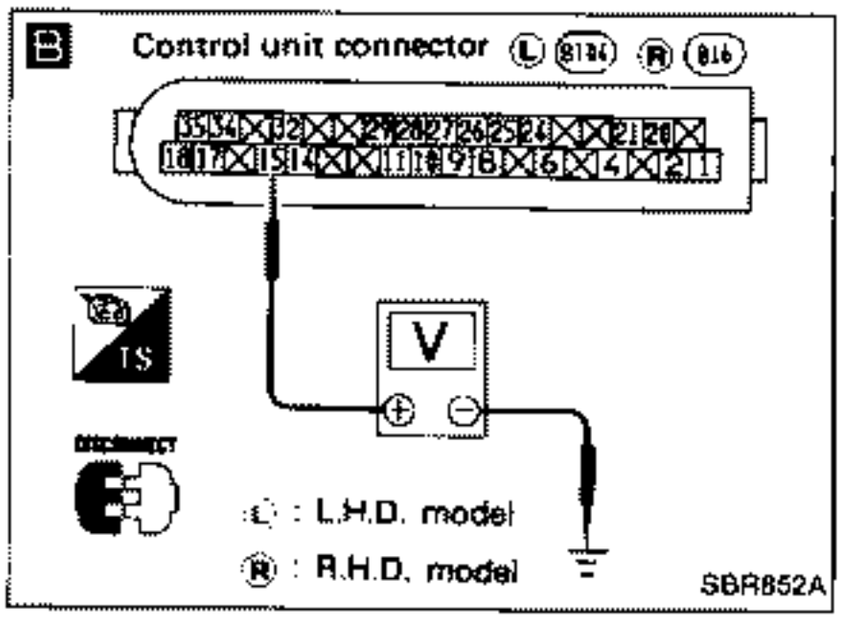

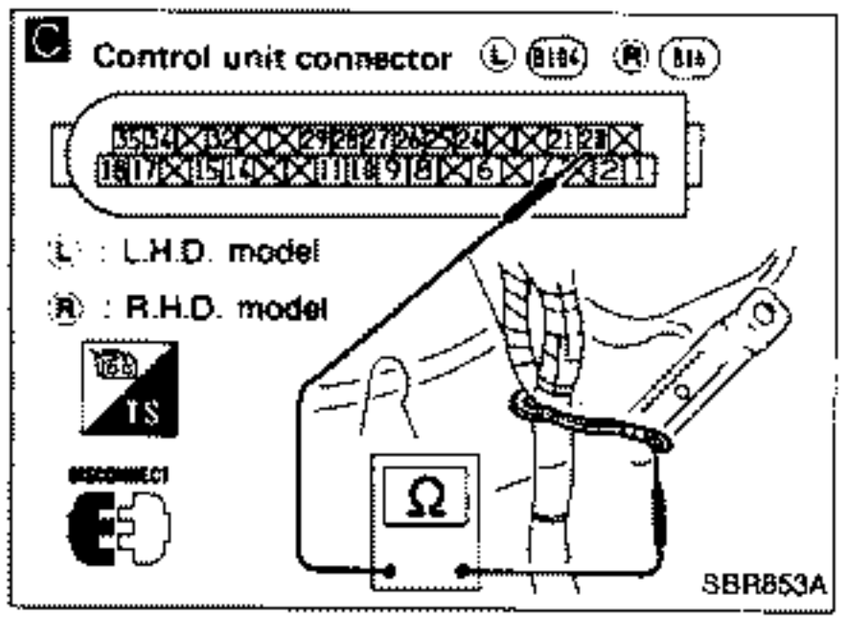

Diagnostic Procedure 11

CONTROL UNIT OR POWER SUPPLY AND GROUND CIRCUIT (Warningactivates but L.E.D. comes off.)

INSPECTION START

A

CHECK CONTROL UNIT POWER SUPPLY.
Disconnect control unit connector.
Check voltage between controlunit connector (vehicle side) terminal ① and body ground with ignitionswitch turned on.

N.G. → Check if controlunit "10A" fuse is blown.

- Yes → Replace fuse.
- No → Repair power supply harness.

O.K. ↓

B

CHECK ALTERNATOR L TERMINAL VOLTAGE.
Disconnect control unit connector.
Check voltage between controlunit connector (vehicle side) terminal ⑮ and body ground after enginestarting.
Voltage: 6V or more

N.G. → Check if otherwarnings activate.

- Yes → Repair harness between alternator and controlunit.
- No → Malfunctioning alternator.

O.K. ↓

C

Check continuity between control unitconnector (vehicle side) terminal ⑳ and body ground with ignitionswitch "OFF".

N.G. → Repair groundharness.

O.K. ↓

Replace control unit.

Electrical Components Inspection

ACTUATOR (Not self-diagnostic item)

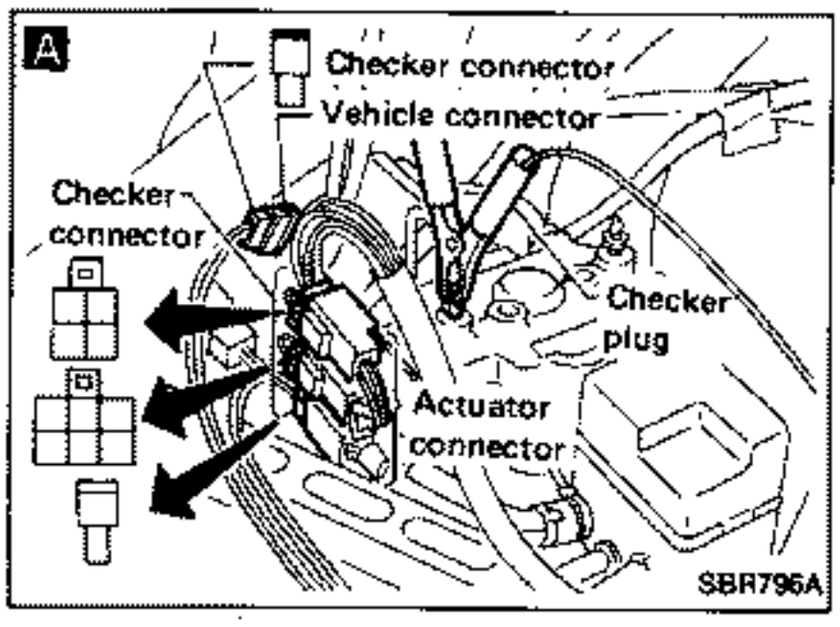

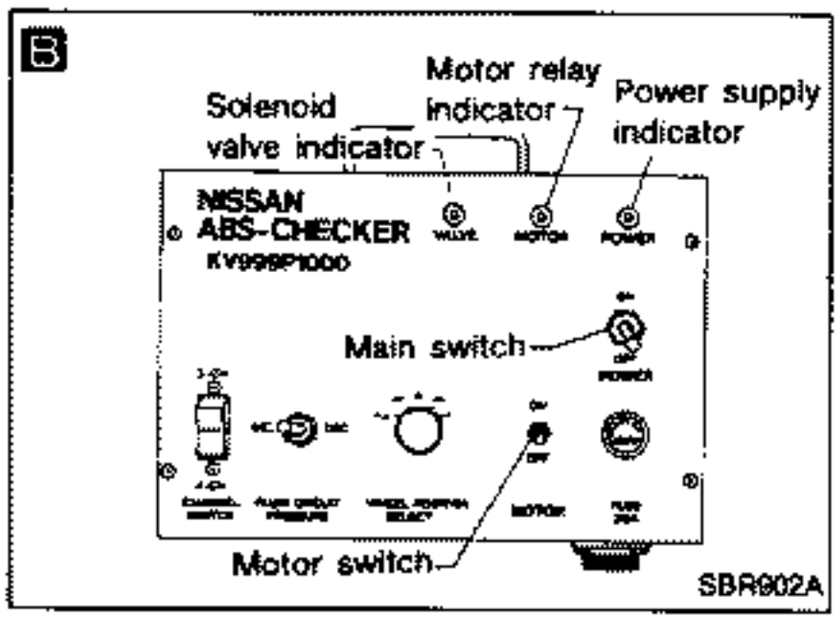

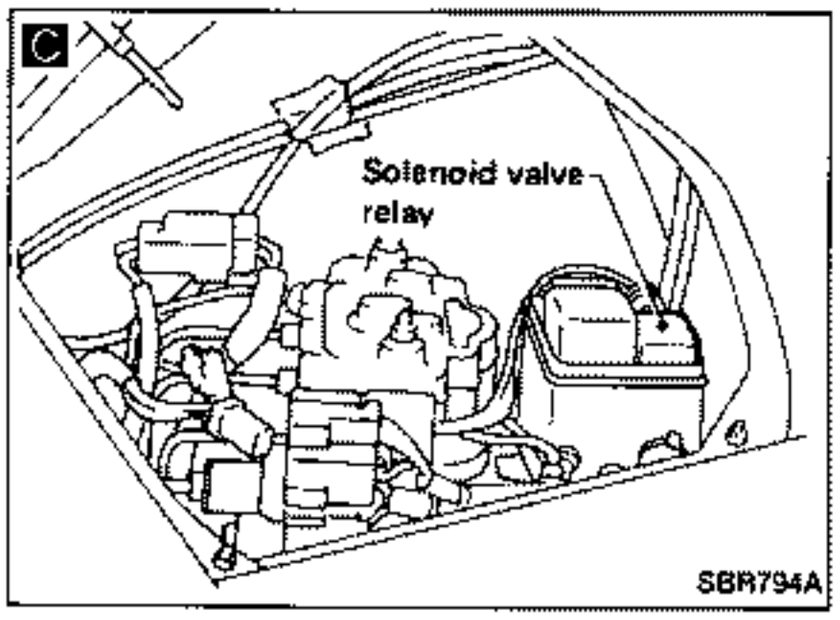

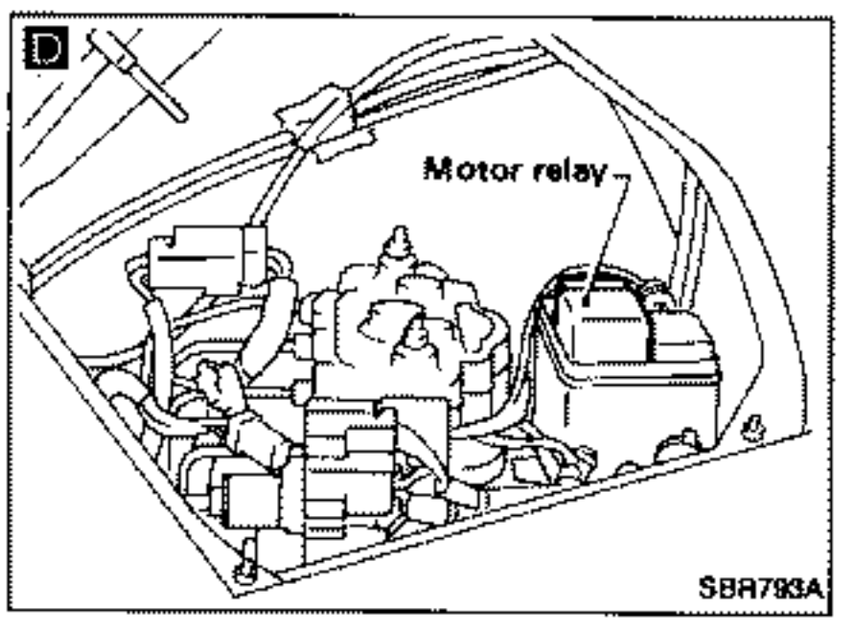

INSPECTION START

A

Connect A.B.S. checker to actuator connector and vehicle harness with battery terminal connected and all checker switch turning off.
Use harness for 3 channel.
Set channel select switch to 3 channel.

B

Turn checker main switch on.
Check power supply indicator for coming on.

No → Replace battery with fully charged new one, if checker connection is correct.

Yes

B

Check checker valve relay indicator for coming on.

No → C Replace solenoid valve relay, if checker connection is correct.

Yes

B Step (A)

Select one valve — FL, FR or RR. (valves corresponding to each wheel position.)
Select brake circuit pressure decreasing position by switch then turn motor switch on.
Select pressure increasing position.

B

Check motor relay indicator for coming on while motor switch is turned on.

No → D Replace motor relay, if checker connection is correct.

Yes

Check motor for operational sound beside the actuator in a quiet place.

No → Replace actuator as assembly, if Diagnostic Procedures 6 - 11 are already performed and checker connection is correct.

Yes

(B)

Electrical Components Inspection (Cont'd)

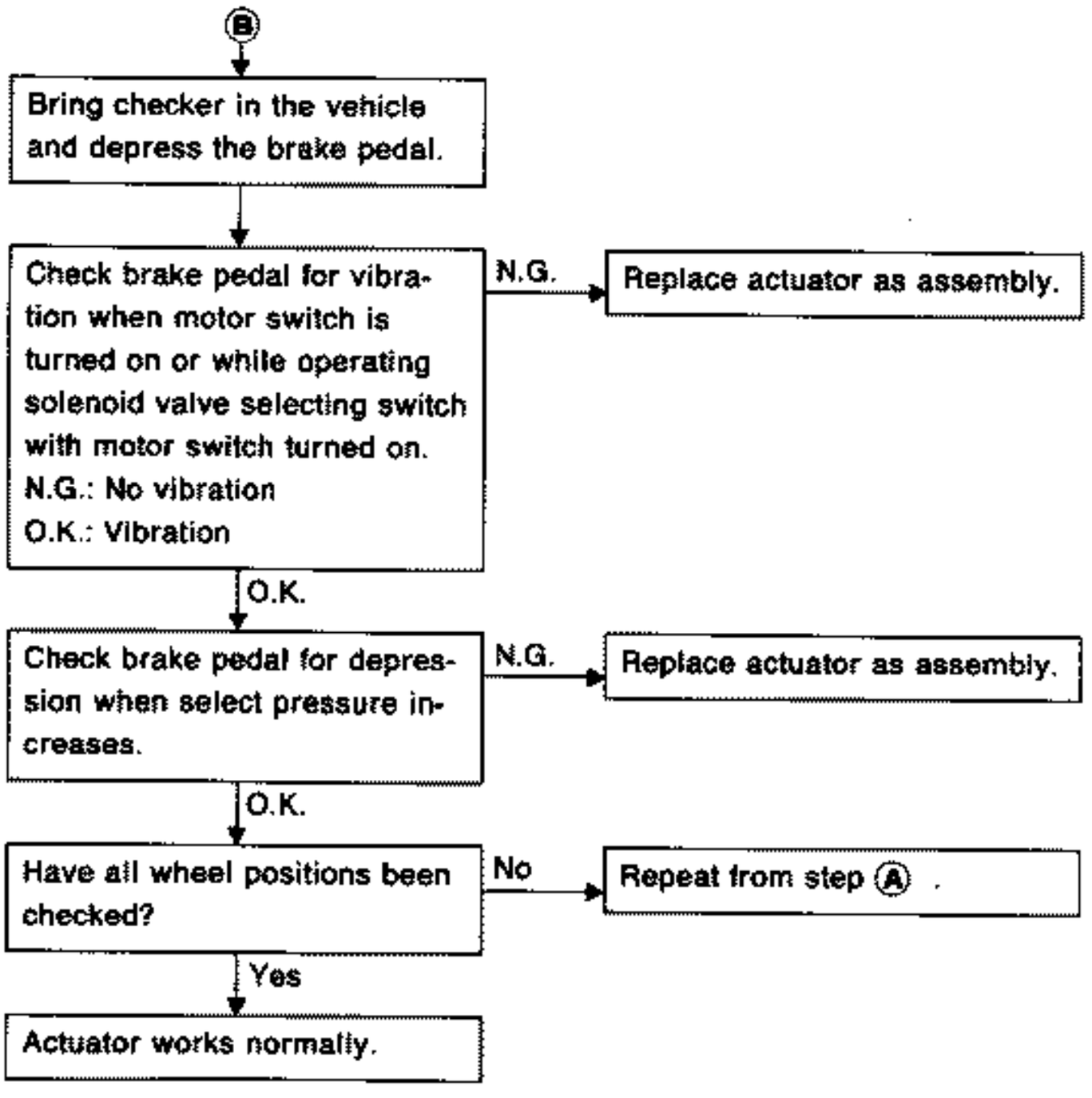

CAUTION:
Do not set checker at pressure decrease position for more than 5 seconds at a time. Actuator solenoid valve may be damaged.

General Specifications

Applied model	Australia		Europe
	Without A.B.S.	With A.B.S.	-
Front brake			
Brake model	OPZ25V		OPF25V
Cylinder bore diameter mm (in)	40.45 (1.5925) x 4		
Pad length x width x thickness mm (in)	116 x 50 x 10 (4.57 x 1.97 x 0.39)		
Rotor outer diameter x thickness mm (in)	280 x 26 (11.02 x 1.02)		280 x 30 (11.02 x 1.18)
Rear brake			
Brake model	OPZ11VB		
Cylinder bore diameter mm (in)	38.1 (1.500) x 2		
Pad length x width x thickness mm (in)	71.8 x 36.5 x 11.5 (2.827 x 1.437 x 0.453)		
Rotor outer diameter x thickness mm (in)	297 x 18 (11.69 x 0.71)		
Master cylinder			
Cylinder bore diameter mm (in)	23.81 (15/16)	26.99 (17/16)	
Control valve			
Valve model	Proportioning valve (within master cylinder)		
Split point x reducing ratio kPa (bar, kg/cm^2, psi)	3,432 (34.3, 35, 498) x 0.4		
Brake booster			
Booster model	M215T		
Diaphragm diameter mm (in)	Primary: 230 (9.06) Secondary: 205 (8.07)		
Brake fluid			
Recommended brake fluid	DOT 3		
Parking drum brake			
Brake model	DS17HD		
Lining			
Width x thickness x length mm (in)	154.1 x 25.0 x 3.0 (6.07 x 0.984 x 0.118)		
Drum inner diameter mm (in)	172.0 (6.77)		

Inspection and Adjustment

FRONT DISC BRAKE

Unit: mm (in)

Brake model	OPZ25V	OPF25V
Pad wear limit		
Minimum thickness	2.0 (0.079)	
Rotor repair limit		
Minimum thickness	24.0 (0.945)	28.0 (1.102)
Maximum runout	0.07 (0.0028)	

REAR DISC BRAKE

Unit: mm (in)

Brake model	OPZ11VB
Pad wear limit	
Minimum thickness	2.0 (0.079)
Rotor repair limit	
Minimum thickness	16.0 (0.630)
Maximum runout	0.07 (0.0028)

PARKING DRUM BRAKE

Unit: mm (in)

Brake model	DS17HD
Lining replacement limit	
Minimum thickness	1.5 (0.059)
Drum repair limit	
Maximum inner diameter	173.0 (6.81)

BRAKE PEDAL

Unit: mm (in)

Applied model	M/T	A/T
Free height	186 - 196 (7.32 - 7.72)	195 - 205 (7.68 - 8.07)
Depressed height [under force of 490 N (50 kg, 110 lb) with engine running]		
With A.B.S.	105 (4.13)	110 (4.33)
Without A.B.S.	95 (3.74)	105 (4.13)
Clearance between pedal stopper and threaded end of switches	0.3 - 1.0 (0.012 - 0.039)	
Pedal free play at clevis	1 - 3 (0.04 - 0.12)	

PARKING BRAKE

Number of notches [under force of 196 N (20 kg, 44 lb)]	6 - 7
Number of notches (when warning lamp switch comes on)	1

STEERING SYSTEM

SECTION ST

CONTENTS

PRECAUTIONS ..... ST- 2
PREPARATION ..... ST- 3
ON-VEHICLE INSPECTION ..... ST- 5
STEERING WHEEL AND STEERING COLUMN ST-10
POWER STEERING GEAR AND LINKAGE (Model PR26SE) ST-14
POWER STEERING OIL PUMP ST-26
TWIN ORIFICE POWER STEERING SYSTEM ST-29
TWIN ORIFICE POWER STEERING SYSTEM — Trouble Diagnoses ST-31
TWIN ORIFICE POWER STEERING SYSTEM —
Trouble Diagnoses (Without SUPER HICAS system) ST-32
TWIN ORIFICE POWER STEERING SYSTEM —
Trouble Diagnoses (With SUPER HICAS system) ST-42
SUPER HICAS SYSTEM ST-43
SUPER HICAS SYSTEM — On-vehicle Inspection ST-44
SUPER HICAS SYSTEM — Repair of Component Parts ST-48
SUPER HICAS SYSTEM — Trouble Diagnoses ST-60
SERVICE DATA AND SPECIFICATIONS (S.D.S.) ST-97

When you read wiring diagrams:

- **Read GI section, "HOW TO READ WIRING DIAGRAMS".**
- **See EL section, "POWER SUPPLY ROUTING" for power distribution circuit.**

When you perform trouble diagnoses, read GI section, "HOW TO FOLLOW FLOW CHART IN TROUBLE DIAGNOSES".

- Before disassembly, thoroughly clean the outside of the unit.
- Disassembly should be done in a clean work area. It is important to prevent the internal parts from becoming contaminated by dirt or other foreign matter.
- When disassembling parts, be sure to place them in order in a parts rack so they can be reinstalled in their proper positions.
- Use nylon cloths or paper towels to clean the parts; common shop rags can leave lint that might interfere with their operation.
- Before inspection or reassembly, carefully clean all parts with a general purpose, non-flammable solvent.
- Before assembly, apply a coat of recommended A.T.F.* to hydraulic parts. Vaseline may be applied to O-rings and seals. Do not use any grease.
- Replace all gaskets, seals and O-rings. Avoid damaging O-rings, seals and gaskets during installation. Perform functional tests whenever designated.

*: Automatic transmission fluid

SPECIAL SERVICE TOOLS

Tool number Tool name	Description
KV48100700 Torque adapter	 Measuring pinion rotating torque
ST27180001 Steering wheel puller	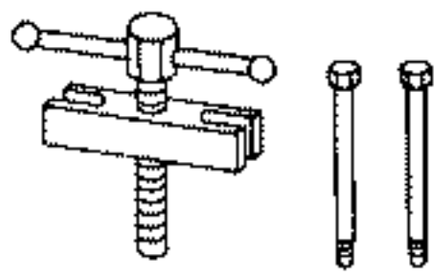 Removing steering wheel
HT72750000 Ball joint remover	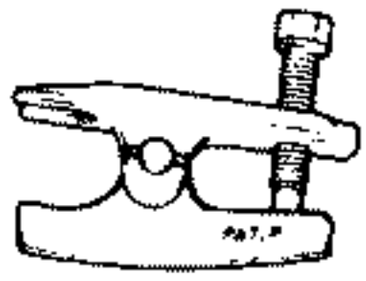 Removing ball joint
ST27091000 Pressure gauge	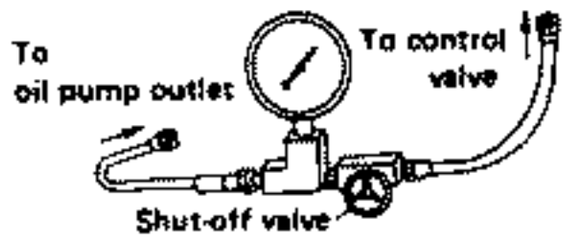 Measuring oil pressure
KV48102500 Pressure gauge adapter	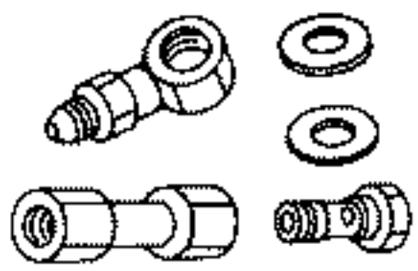 Measuring oil pressure
ST3127S000 ①GG91030000 Torque wrench ②HT6294000 Socket adapter ③HT62900000 Socket adapter	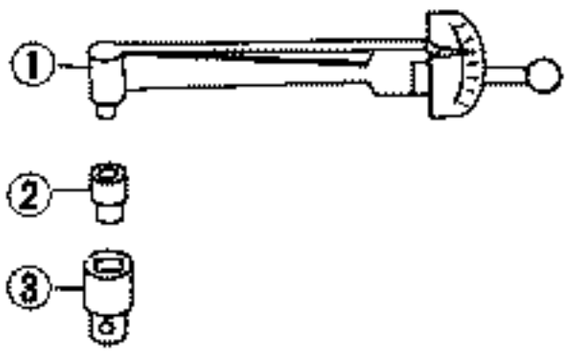 Measuring turning torque
KV48104400 Rack seal ring reformer	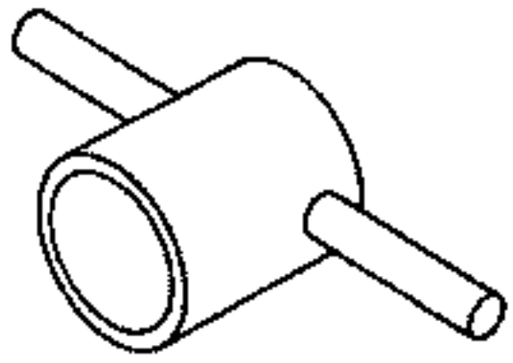 Reforming teflon ring
KV32101100 Pin punch	 Removing and installing tube seat

COMMERCIAL SERVICE TOOLS

Tool name	Description
Rear oil seal drift	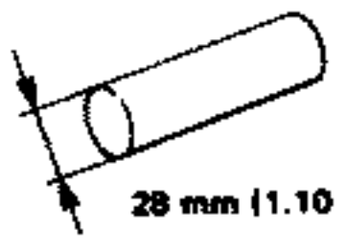 Installing rear oil seal
Pinion oil seal drift	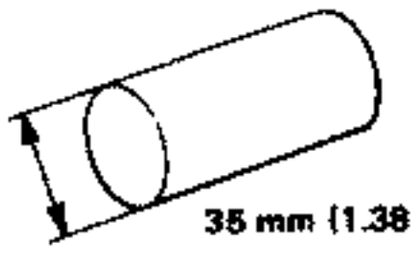 Installing pinion oil seal
Oil pump attachment	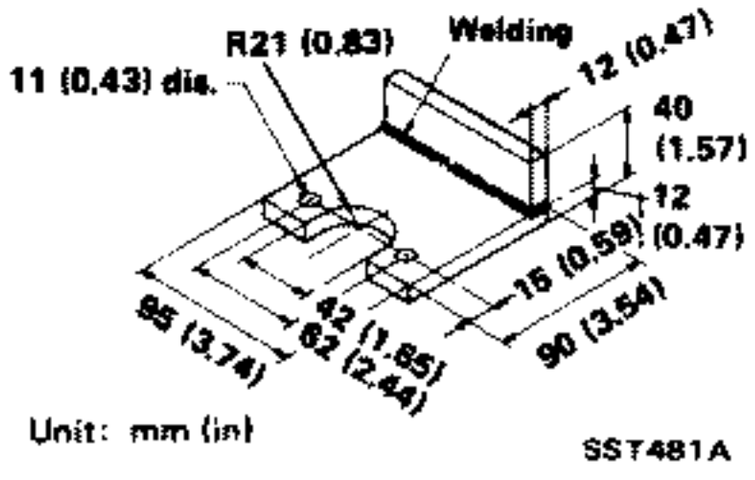 Disassembling and assembling oil pump

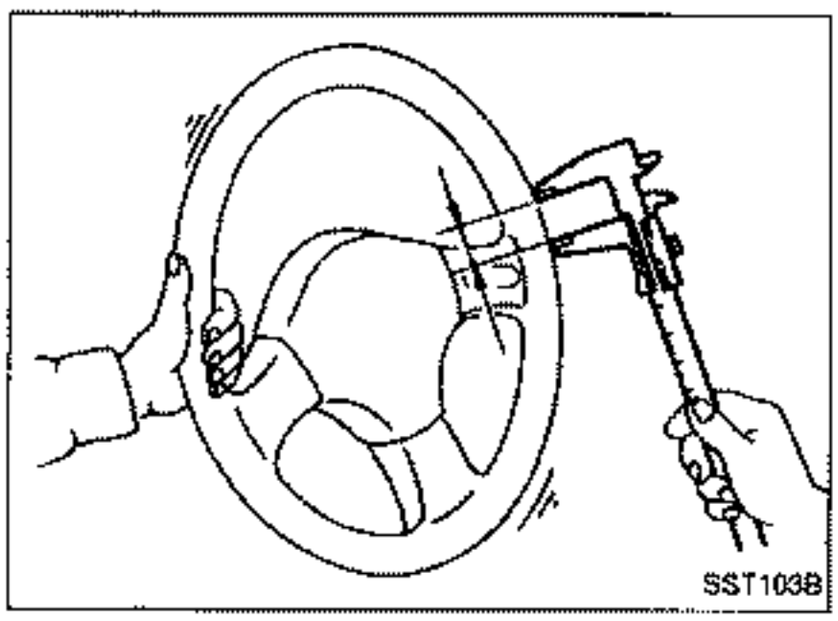

Checking Steering Wheel Play

- With wheels in a straight-ahead position, check steering wheel play.
  Steering wheel play:
  35 mm (1.38 in) or less
- If it is not within specification, check steering gear assembly when front suspension and axle, steering gear assembly and steering column are mounted correctly.

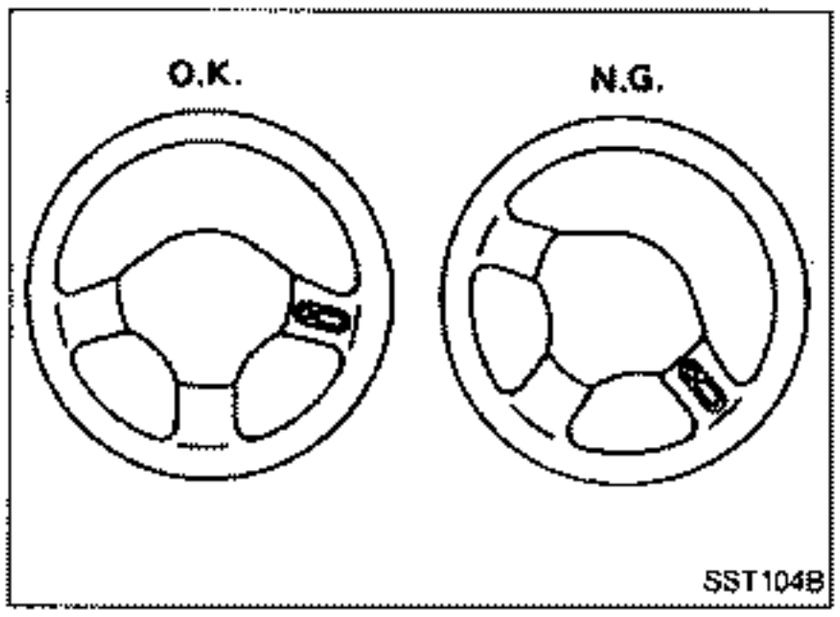

Checking Neutral Position on Steering Wheel

Pre-checking

- Make sure that wheel alignment is correct.
  Wheel alignment:
  Refer to section FA for S.D.S.
- Verify that the steering gear is centered before removing the steering wheel.

Checking

1. Check that the steering wheel is in the neutral position when driving straight ahead.
2. If it is not in the neutral position, remove the steering wheel and reinstall it correctly.
3. If the neutral position is between two serrated teeth, loosen tie-rod lock nut and move tie-rod in the opposite direction by the same amount on both left and right sides to compensate for error in the neutral position.

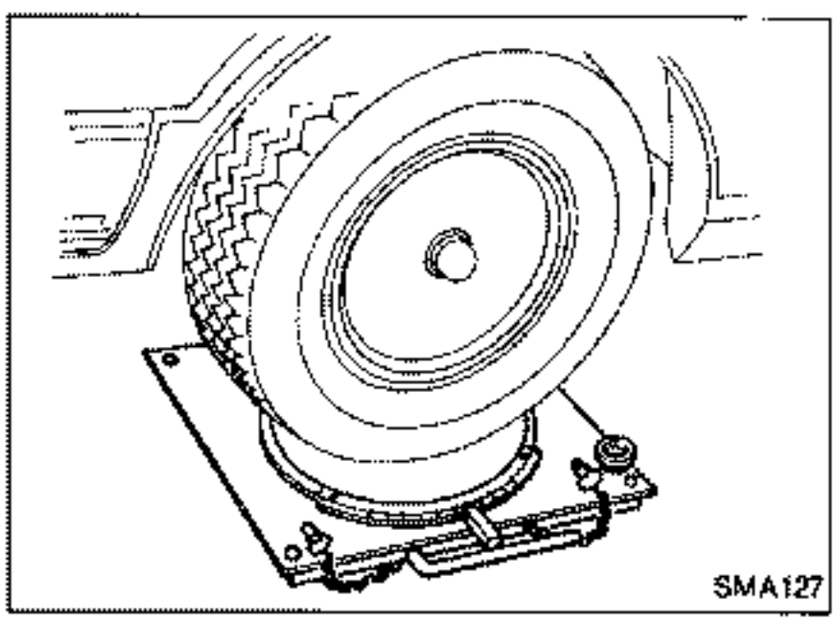

Front Wheel Turning Angle

1. Rotate steering wheel all the way right and left; measure turning angle.
   Turning angle of full turns:
   Refer to section FA for S.D.S.

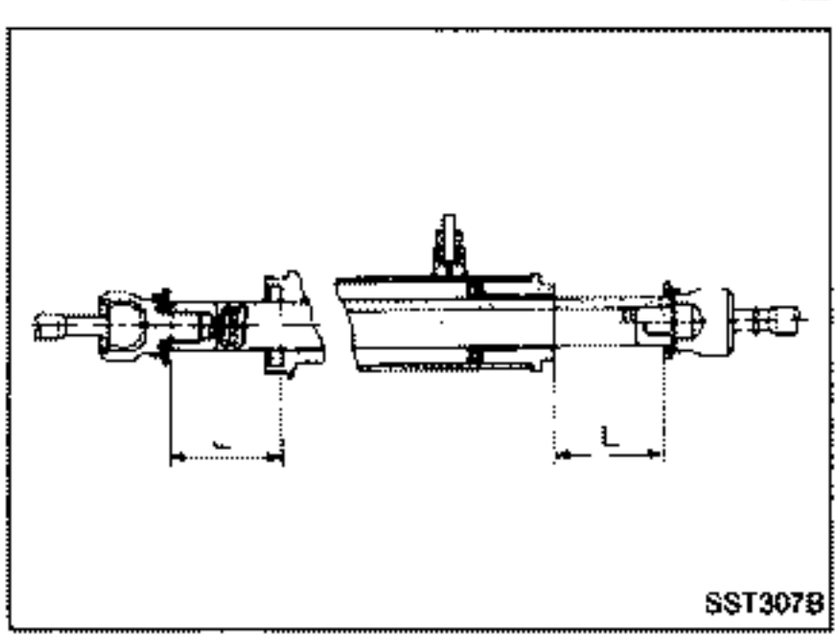

2. If it is not within specification, check rack stroke.
   Rack stroke "L":
   Refer to S.D.S.

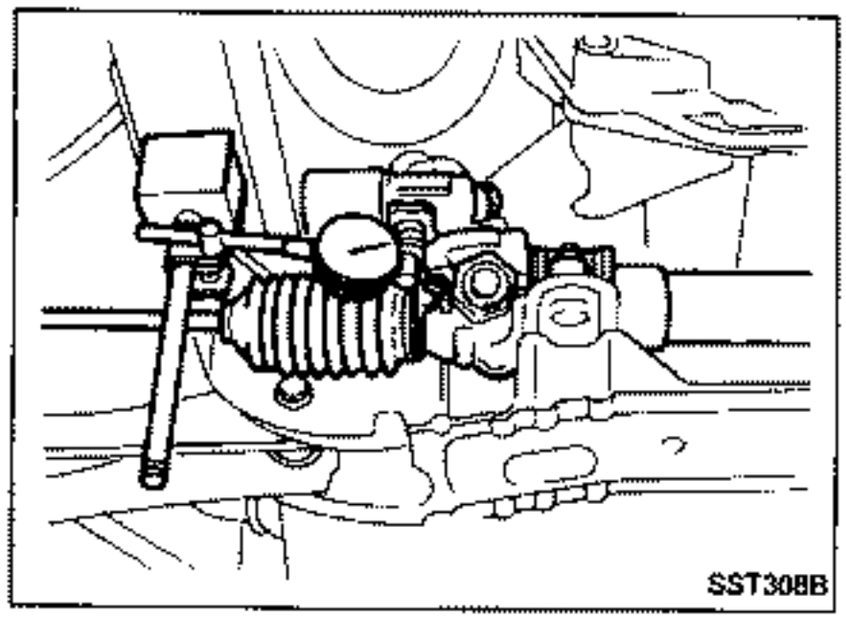

Checking Gear Housing Movement

1. Check the movement of steering gear housing during stationary steering on a dry paved surface.
- Apply a force of 49 N (5 kg, 11 lb) to steering wheel to check the gear housing movement.
  Turn off ignition key while checking.
  Movement of gear housing:
  ±2 mm (±0.08 in) or less
2. If movement exceeds the limit, replace mount insulator after confirming proper installation of gear housing clamps.

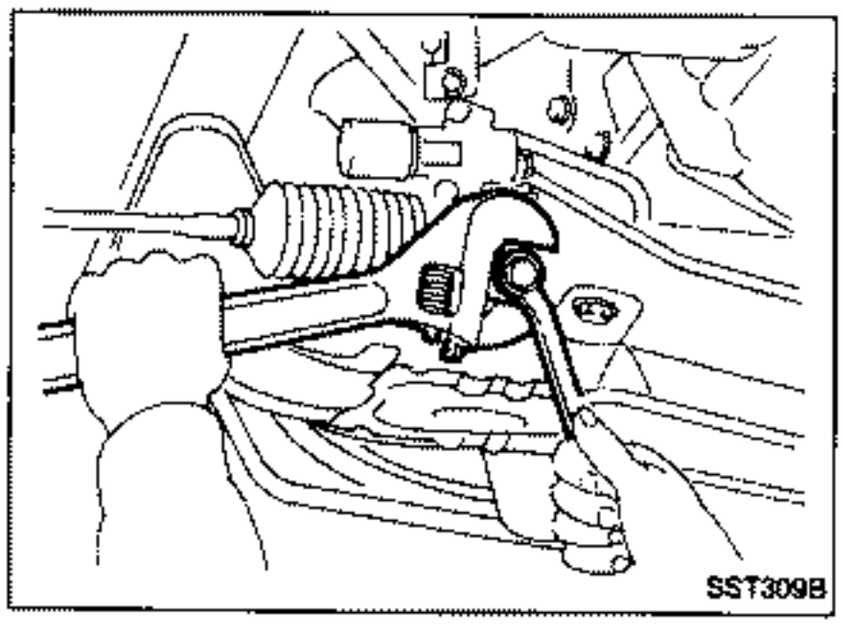

Adjusting Rack Retainer

- Perform this driving test on a flat road.
1. Check whether vehicle moves in a straight line when steering wheel is released.
2. Check whether steering wheel returns to neutral position when steering wheel is released from a slightly turned (approx. 20°) position.
- If any abnormality is found, correct it by resetting adjusting screw.

Checking and Adjusting Drive Belts

Refer to section MA for Drive Belt Inspection.

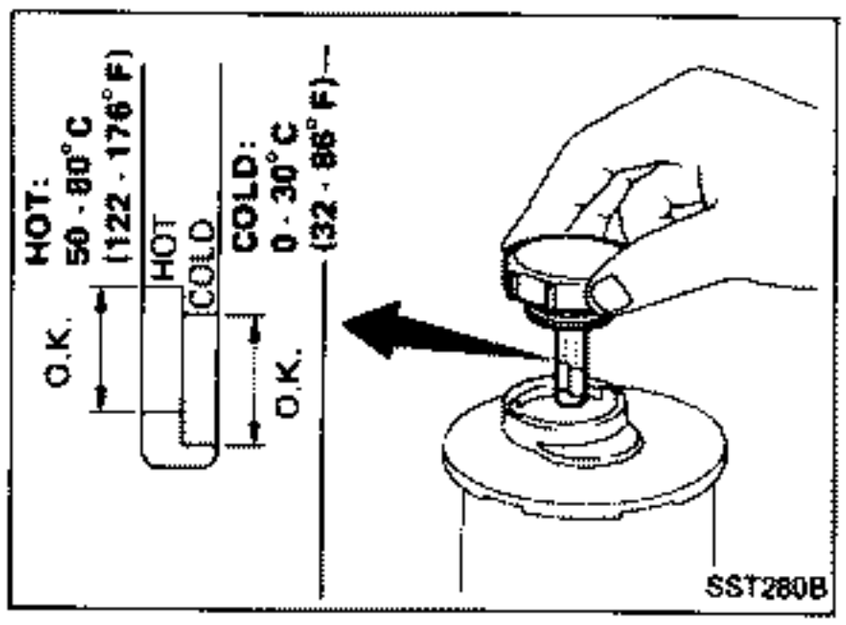

Checking Fluid Level

Check fluid level.
Fluid level should be checked using "HOT" range on dipstick at fluid temperatures of 50 to 80°C (122 to 176°F) or using "COLD" range on dipstick at fluid temperatures of 0 to 30°C (32 to 86°F).

CAUTION:

- **Do not overfill.**
- **Recommended fluid is Automatic Transmission Fluid "DEXRON™" type.**

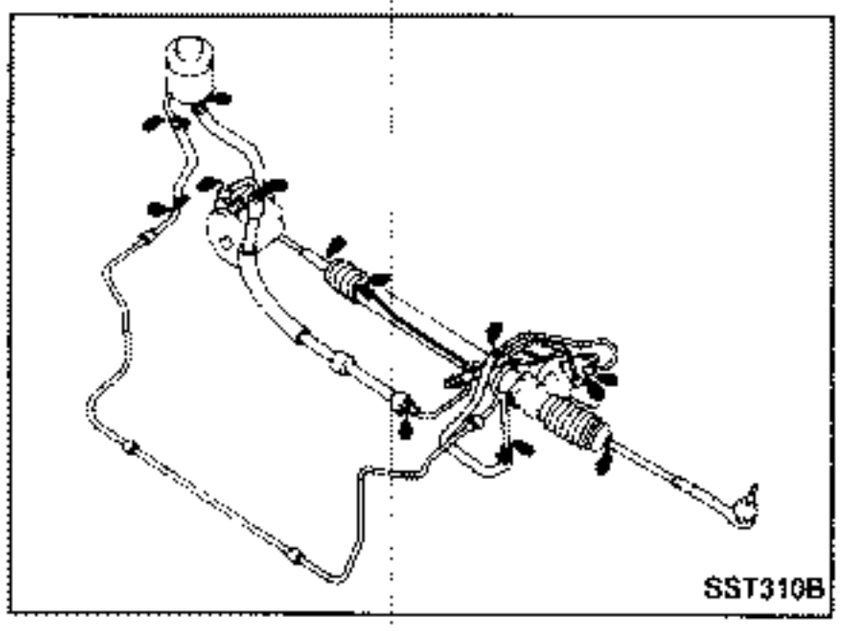

Checking Fluid Leakage

Check the lines for improper attachment and for leaks, cracks, damage, loose connections, chafing or deterioration.

1. Run engine at idle speed or 1,000 rpm.
   Make sure temperature of fluid in oil tank rises to 60 to 80°C (140 to 176°F).
2. Turn steering wheel right-to-left several times.
3. Hold steering wheel at each "lock" position for five seconds and carefully check for fluid leakage.

CAUTION:
Do not hold the steering wheel in a locked position for more than 15 seconds.

4. If fluid leakage at connectors is noticed, loosen flare nut and then retighten.

Do not overtighten connector as this can damage O-ring, washer and connector.

Bleeding Hydraulic System

1. Raise front end of vehicle until wheels clear ground.
2. Add fluid into oil tank to specified level. Meanwhile, quickly turn steering wheel fully to right and left and lightly touch steering stoppers.
   Repeat steering wheel operation until fluid level no longer decreases.
3. Start engine.
   Repeat step 2 above.

- Incomplete air bleeding will cause the following to occur. When this happens, bleed air again.

a. Generation of air bubbles in reservoir tank
b. Generation of clicking noise in oil pump
c. Excessive buzzing in oil pump

While the vehicle is stationary or while turning the steering wheel slowly, fluid noise may occur in the valve or oil pump. This noise is inherent in this steering system, and it will not affect performance or durability of the system.

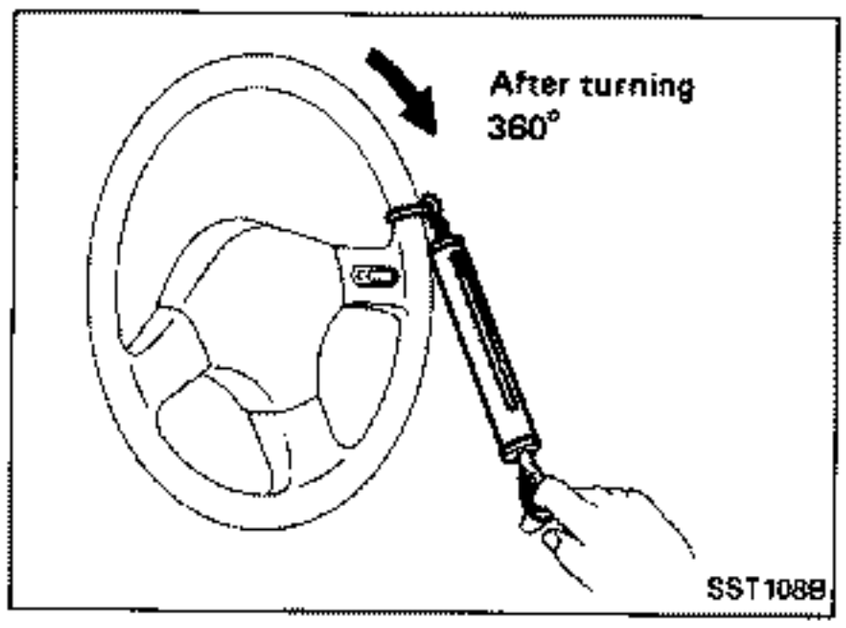

Checking Steering Wheel Turning Force

1. Park vehicle on a level, dry surface and set parking brake.
2. Start engine.
3. Bring power steering fluid up to adequate operating temperature. [Make sure temperature of fluid is approximately 60 to 80°C (140 to 176°F).]

Tires need to be inflated to normal pressure.

4. Check steering wheel turning force when steering wheel has been turned 360° from the neutral position.

   Steering wheel turning force:

   39 N (4 kg, 9 lb) or less

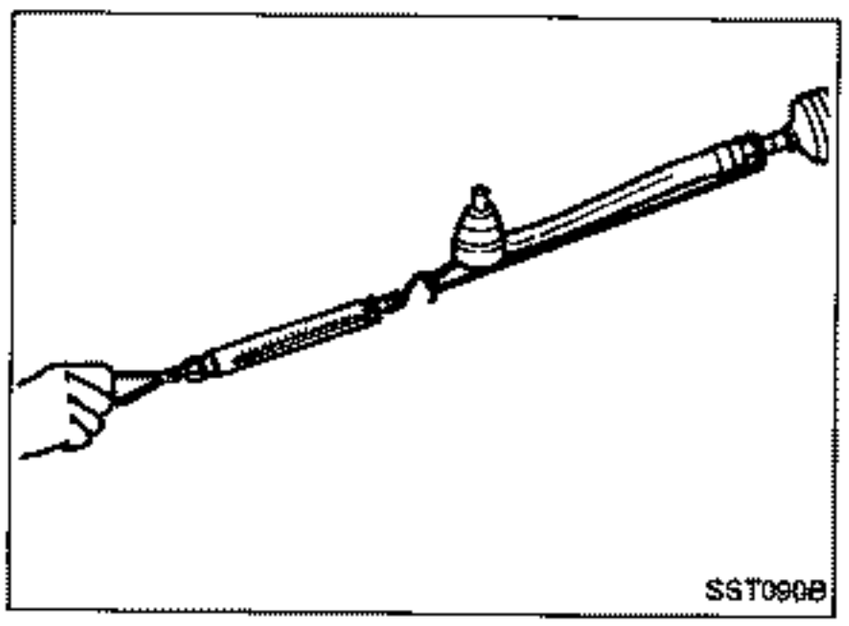

5. If steering wheel turning force is out of specifications, check rack sliding force to detect condition of steering gear assembly.

a. Disconnect steering column lower joint and knuckle arms from the gear.

b. Start and run engine at idle to make sure steering fluid has reached normal operating temperature.

c. While pulling tie-rod slowly in the ±11.5 mm (±0.453 in) range from the neutral position, make sure rack sliding force is within specification.

   Average rack sliding force:

   Without HICAS

   206 - 265 N (21 - 27 kg, 46 - 60 lb)

   With HICAS

   201.0 - 250.1 N (20.5 - 25.5 kg, 45.2 - 56.2 lb)

d. Check sliding force outside above range.

   Maximum rack sliding force:

   Not more than 39 N (4 kg, 9 lb) beyond above value

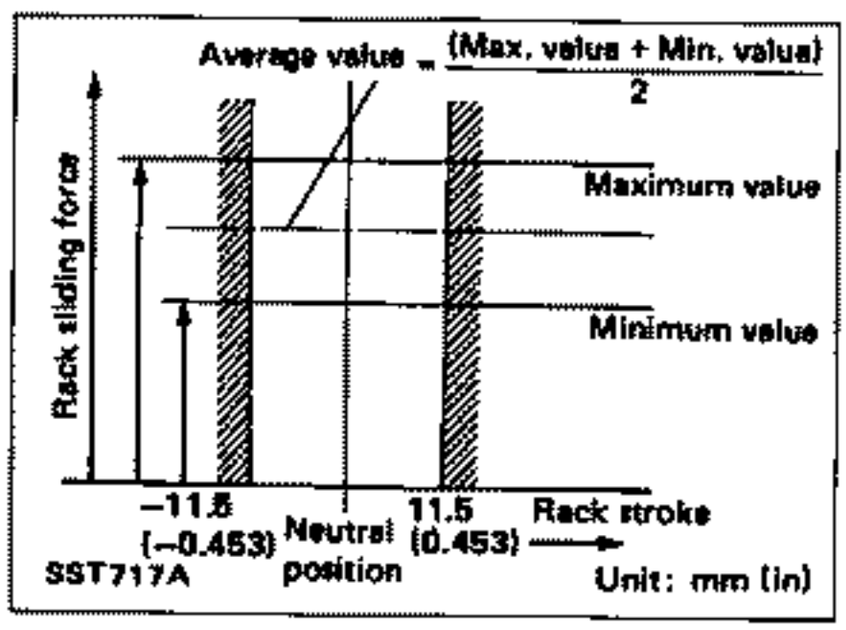

6. If rack sliding force is not within specification, overhaul steering gear assembly.

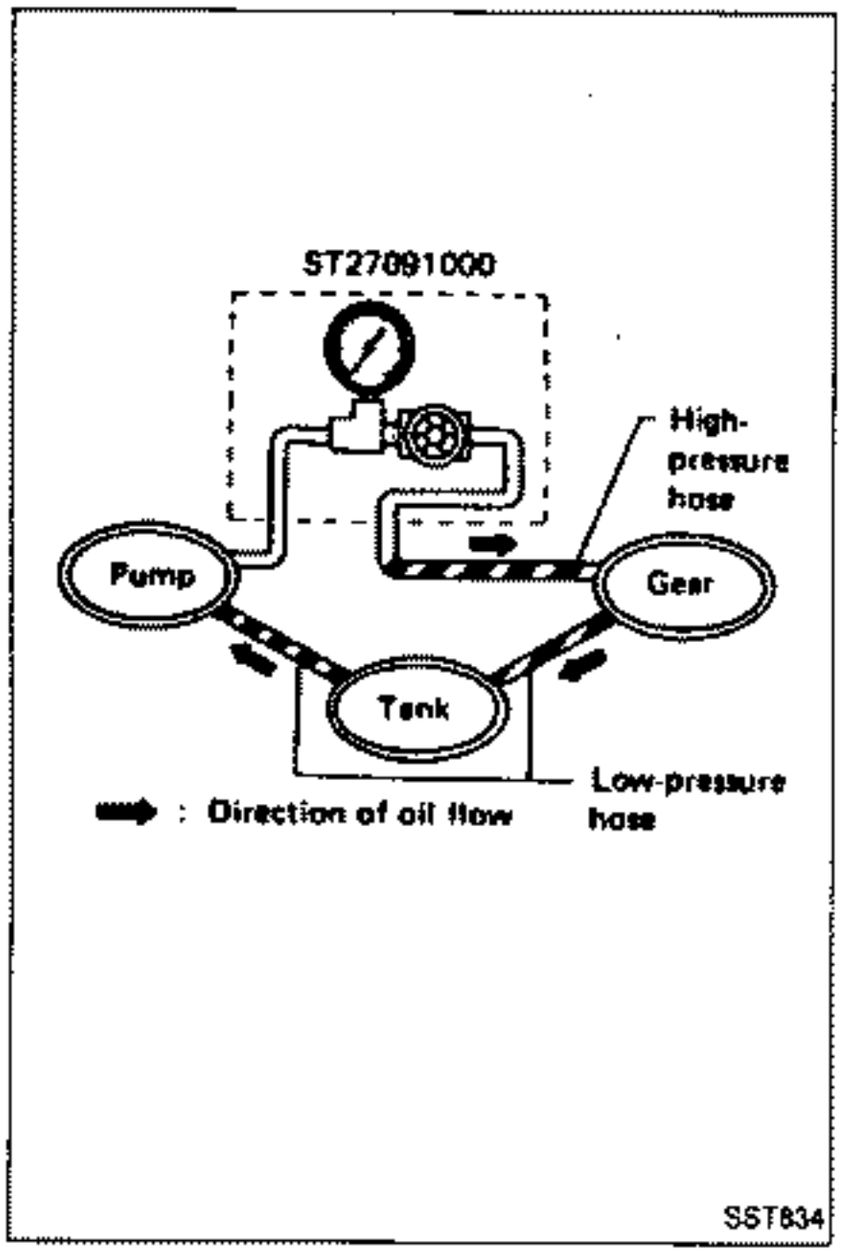

Checking Hydraulic System

Before starting, check belt tension, driving pulley and tire pressure.

1. Set Tool. Open shut-off valve. Then bleed air. (See "Bleeding Hydraulic System".)
2. Run engine.

Make sure temperature of fluid in tank rises to 60 to 80°C (140 to 176°F).

WARNING:

Warm up engine with shut-off valve fully opened. If engine is started with shut-off valve closed, oil pressure in oil pump will increase to relief pressure, resulting in an abnormal rise in oil temperature.

3. Check pressure with steering wheel fully turned to left and right positions with engine idling at 1,000 rpm.

CAUTION:

Do not hold the steering wheel in a locked position for more than 15 seconds.

Oil pump maximum standard pressure:
7,453 - 8,042 kPa (74.5 - 80.4 bar, 76 - 82 kg/cm^2, 1,081 - 1,166 psi)

4. If oil pressure is below the standard pressure, slowly close shut-off valve and check pressure.

- When pressure reaches standard pressure, gear is damaged.
- When pressure remains below standard pressure, pump is damaged.

CAUTION:

Do not close shut-off valve for more than 15 seconds.

5. If oil pressure is higher than standard pressure, check oil pump flow control valve.
6. After checking hydraulic system, remove Tool and add fluid as necessary, then completely bleed air out of system.

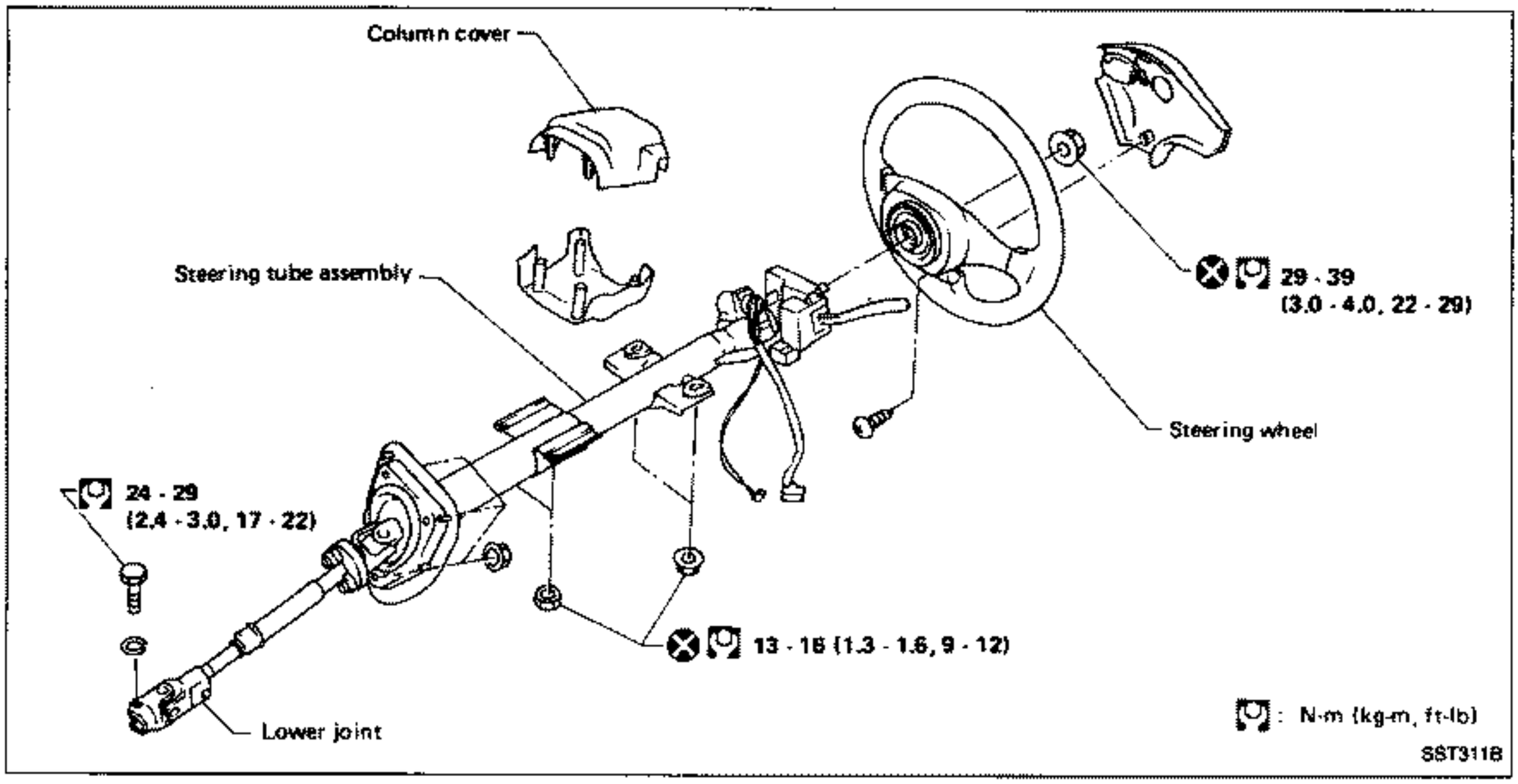

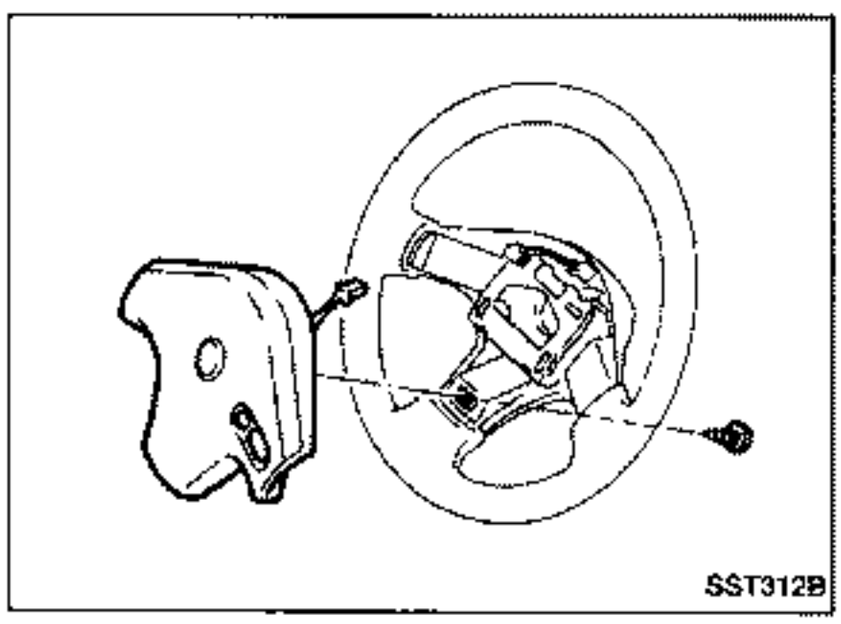

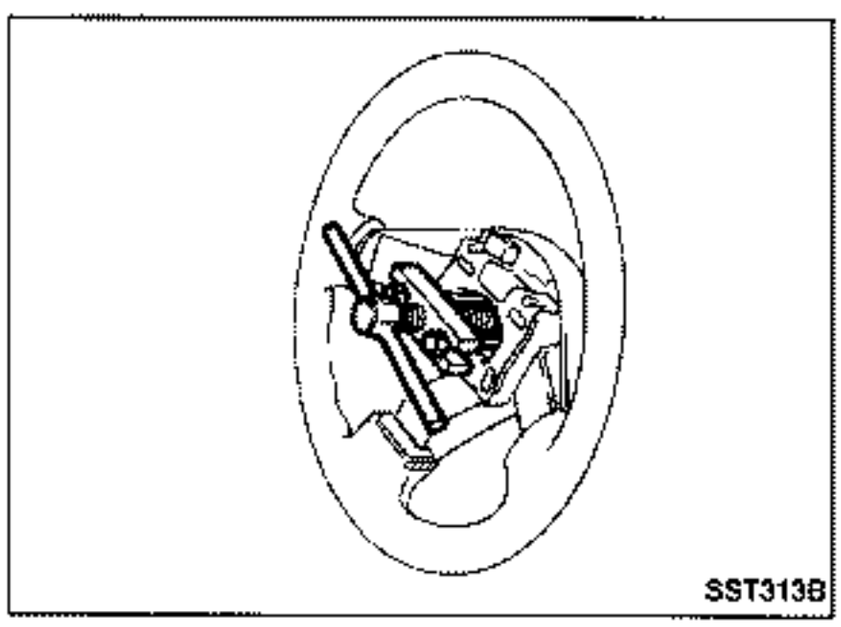

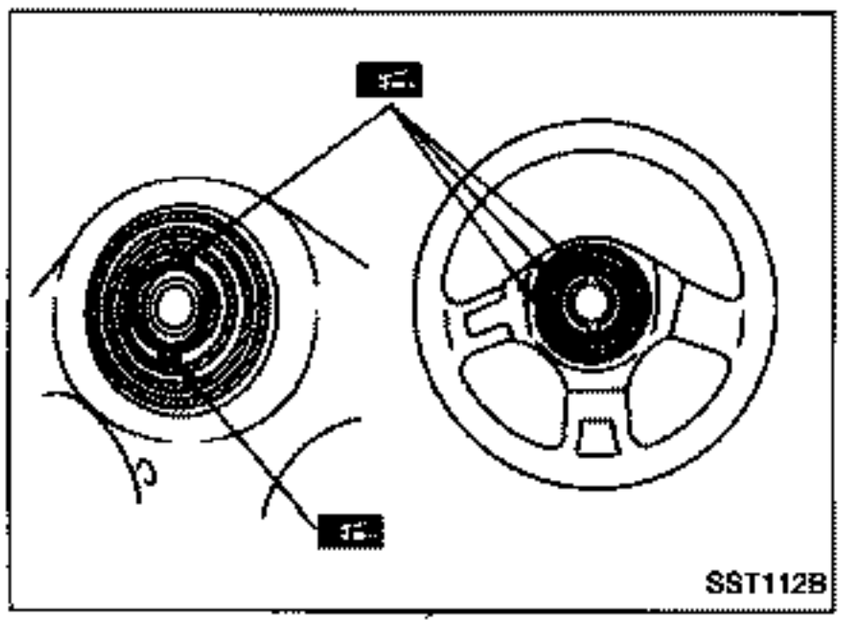

Removal

STEERING WHEEL

- Remove screw from rear of steering wheel and pull out horn pad.
- Remove steering wheel with Tool.

Installation

STEERING WHEEL

When installing steering wheel, apply multi-purpose grease to entire surface of turn signal cancel pin (both portions) and also to horn contact slip ring.

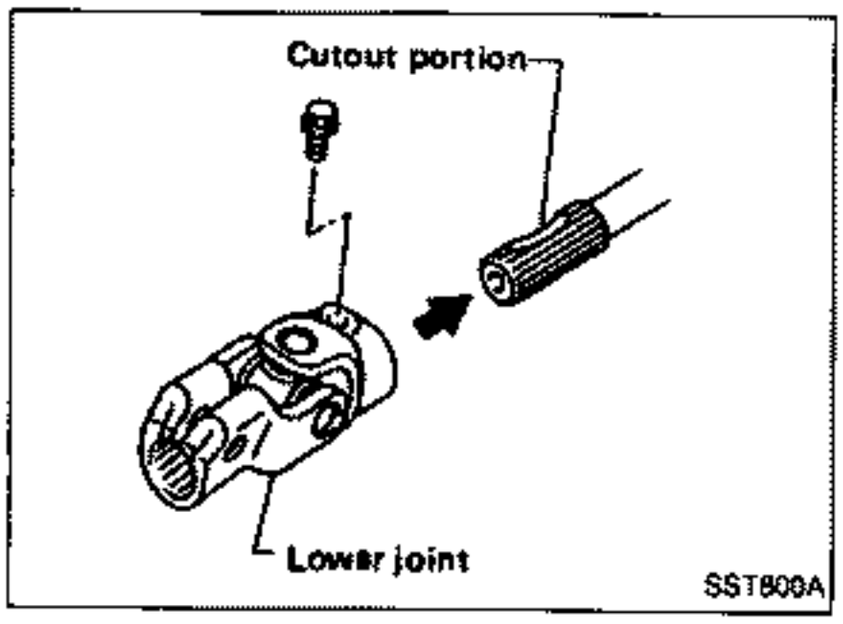

Installation (Cont'd)

STEERING COLUMN

- When installing steering column, fingertighten all lower bracket and clamp retaining bolts; then tighten them securely. Do not apply undue stress to steering column.
- When attaching coupling joint, be sure tightening bolt faces cutout portion.

CAUTION:

After installing steering column, turn steering wheel to make sure it moves smoothly and that the number of turns from the straight forward position to left and right locks are equal.
Be sure that the steering wheel is in a neutral position when driving straight ahead.

Disassembly and Assembly

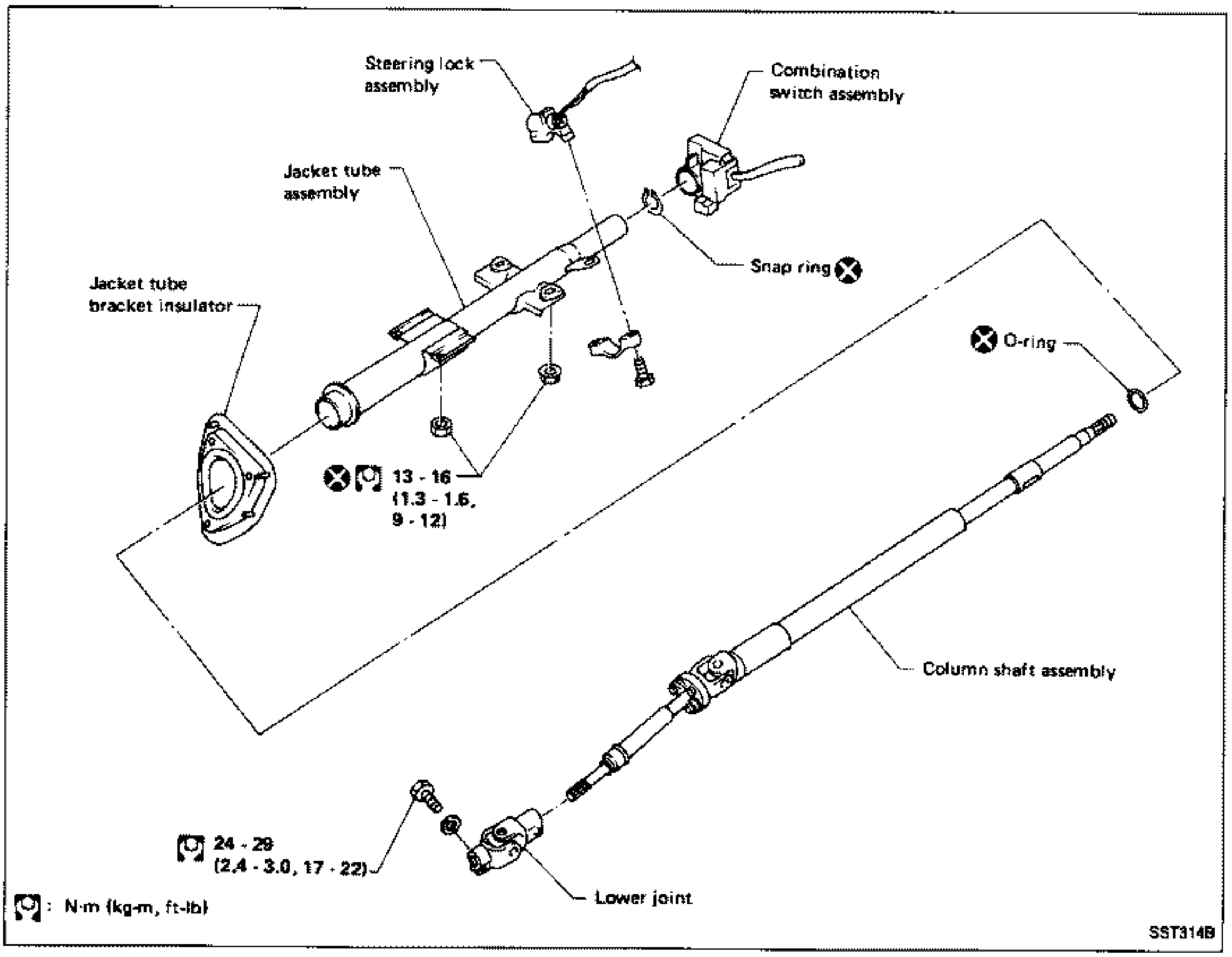

Disassembly and Assembly (Cont'd)

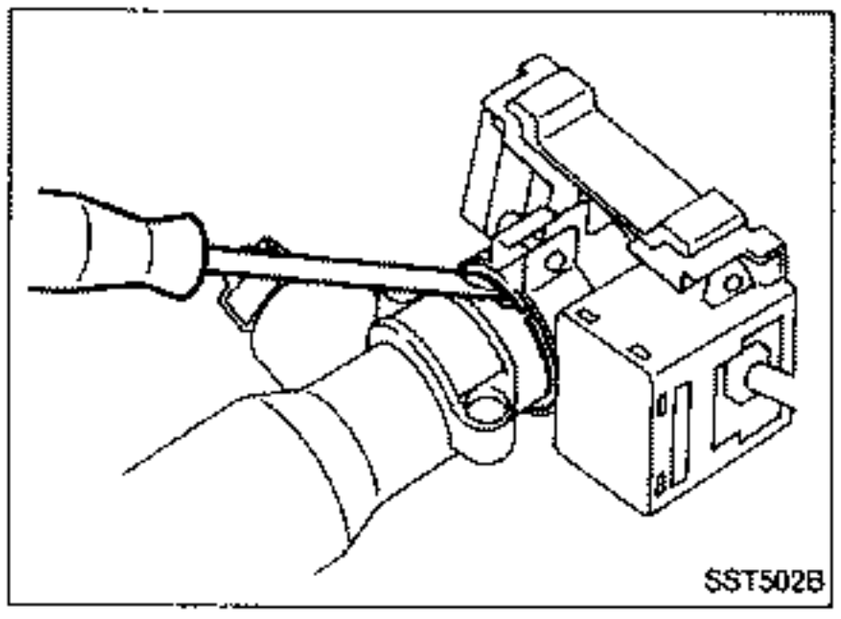

- To remove combination switch, insert a suitable tool between mating portion. Lift switch bracket and pull it out.

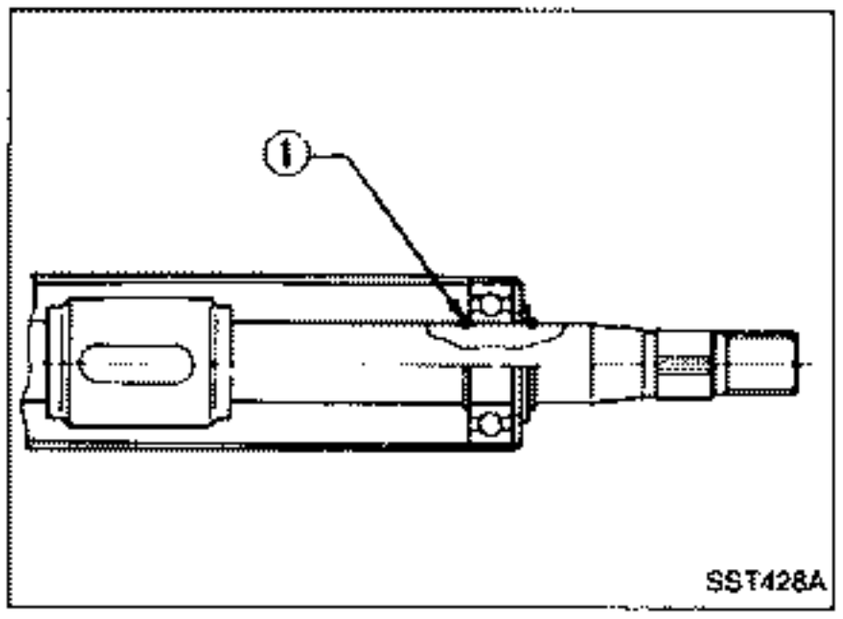

- When disassembling and assembling, unlock steering lock with key.
- Install O-ring ① before inserting shaft into jacket tube. Ensure that rounded surface of snap ring faces toward bearing when snap ring is installed.

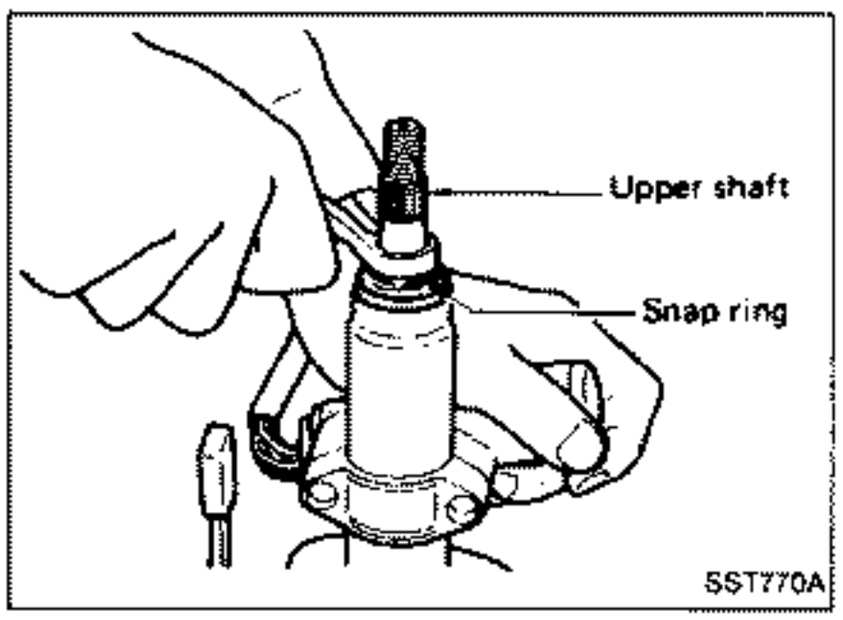

- Install snap ring on upper shaft with box wrench.

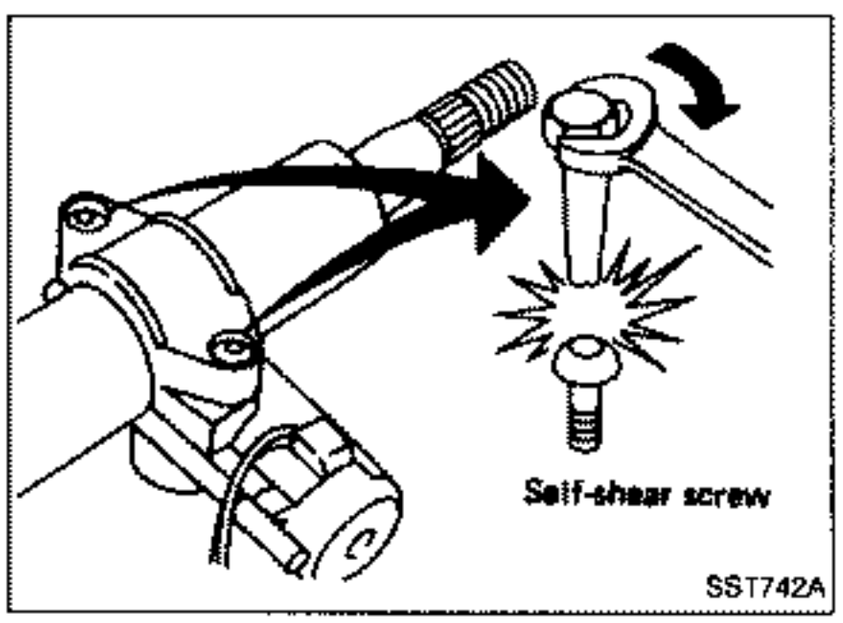

- Steering lock

a) Break self-shear type screws with a drill or other appropriate tool.

b) Install self-shear type screws and then cut off self-shear type screw heads.

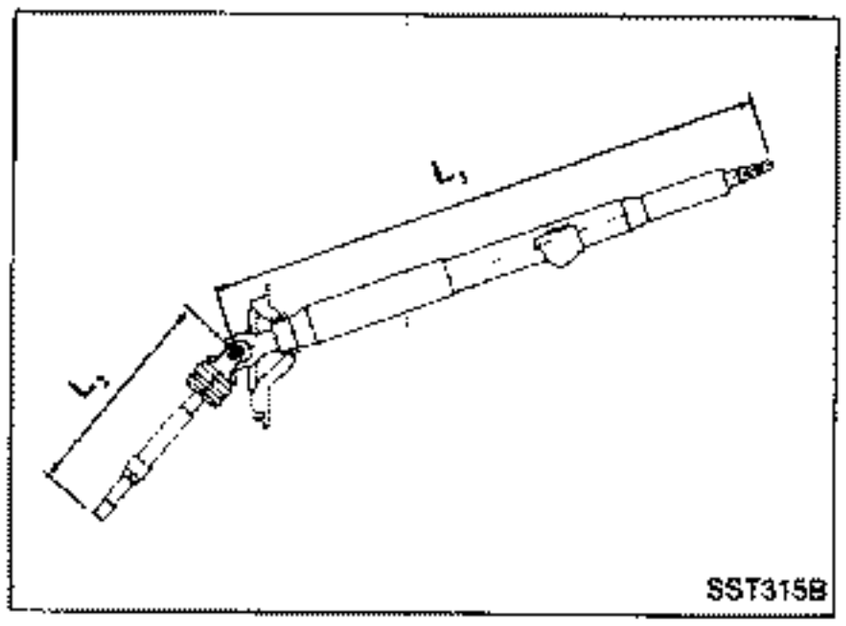

Inspection

- When steering wheel can not be rotated smoothly, check the steering column for the following matters and replace damaged parts.

a. Check column bearings for damage or unevenness. Lubricate with recommended multi-purpose grease or replace steering column as an assembly, if necessary.

b. Check steering column lower shaft for deformation or breakage. Replace if necessary.

- When the vehicle is involved in a light collision, check steering column length "L_1" and steering column lower shaft length "L_2". If it is not within specifications, replace steering column as an assembly.

Steering column length "L_1":
745.9 - 747.5 mm (29.37 - 29.43 in)
Steering column lower shaft length "L_2":
L.H.D.
280.6 - 282.2 mm (11.05 - 11.11 in)
R.H.D.
314.6 - 316.2 mm (12.39 - 12.45 in)

Removal and installation

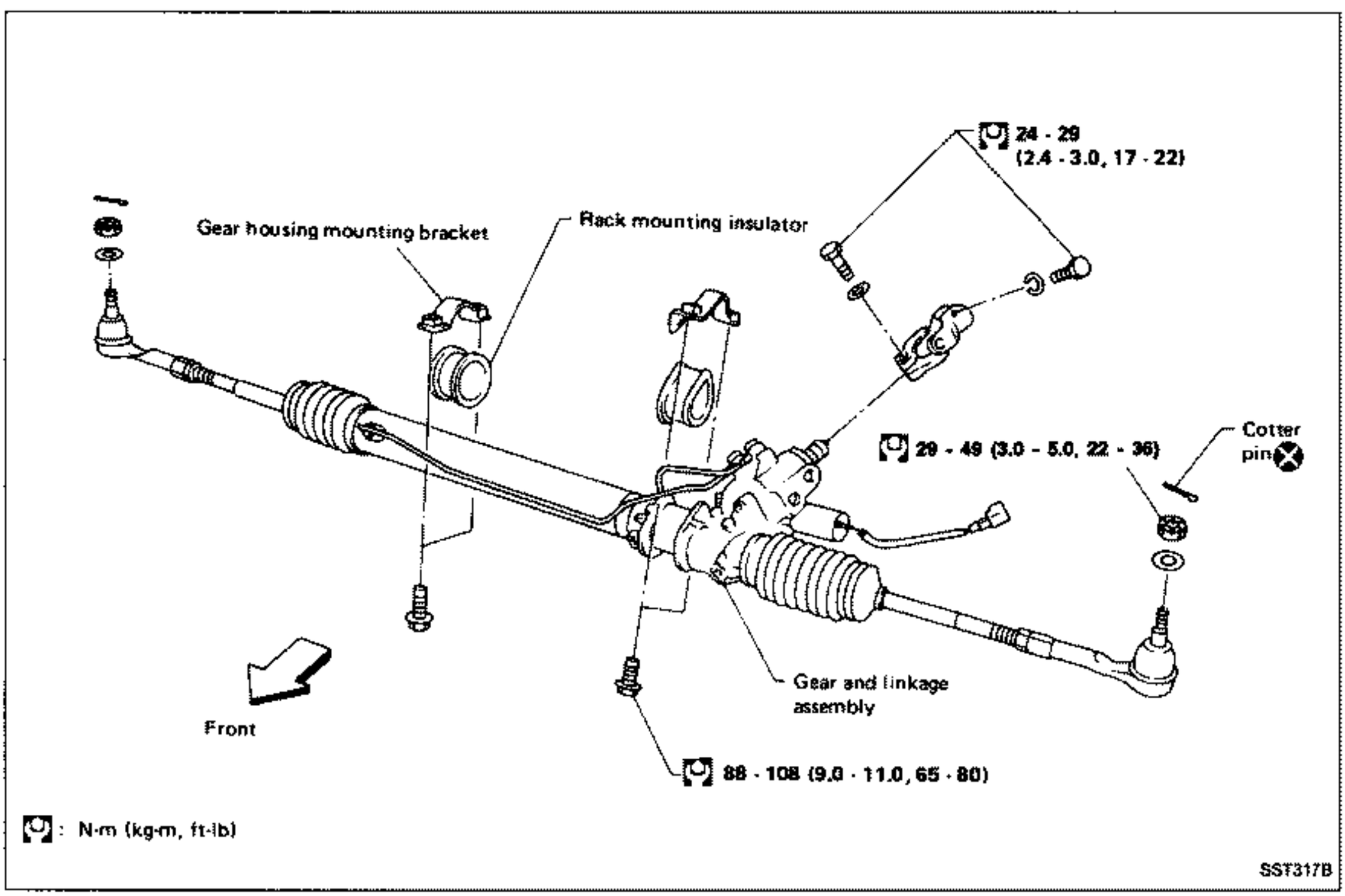

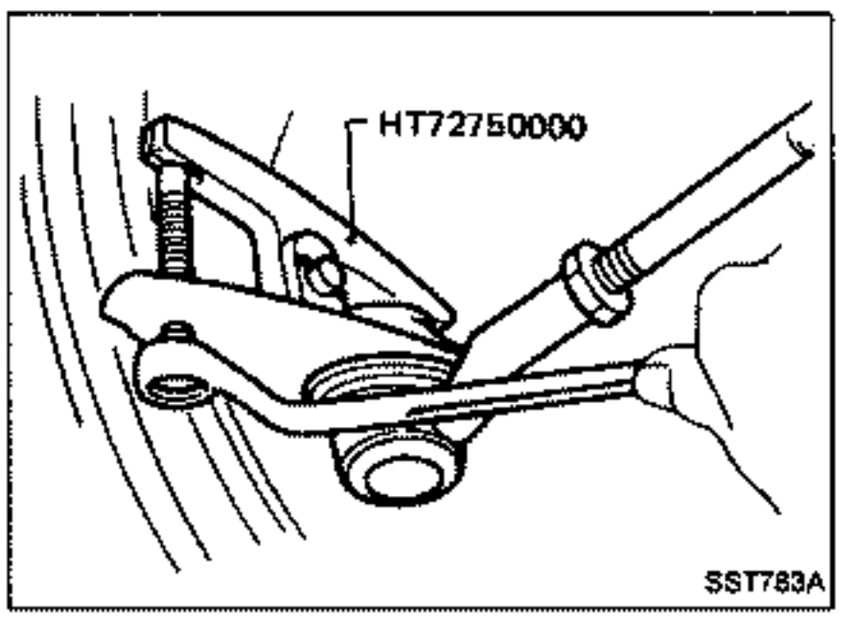

- Detach tie-rod outer sockets from knuckle arms with Tool.

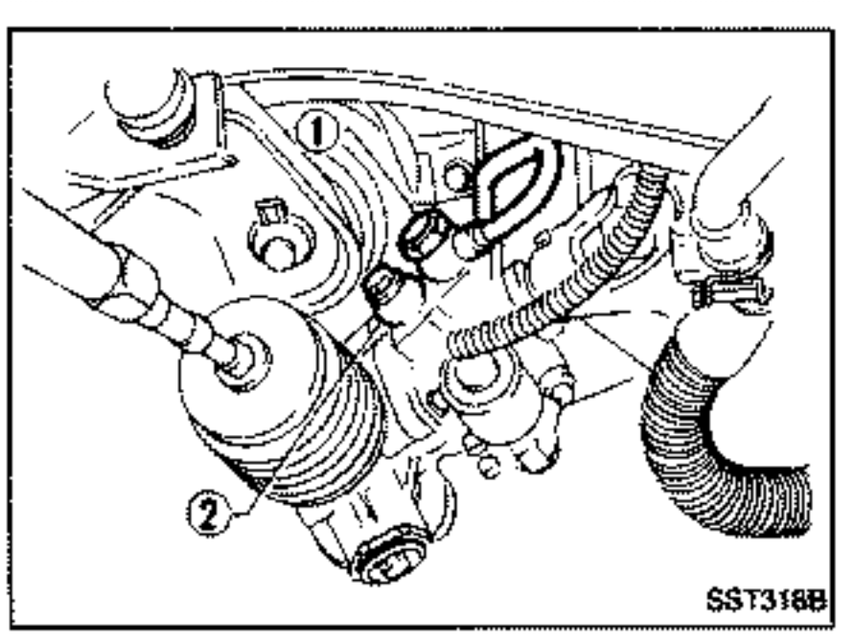

- Install pipe connector.
  1. Low-pressure side
     : 36 - 40 N·m (3.7 - 4.1 kg-m, 27 - 30 ft-lb)
  2. High-pressure side
     : 30 - 35 N·m (3.1 - 3.6 kg-m, 22 - 26 ft-lb)

Removal and Installation (Cont'd)

- Observe specified tightening torque when tightening high-pressure and low-pressure pipe connectors. Excessive tightening can damage threads or damaged connector O-ring.
- The O-ring in low-pressure pipe connector is larger than that in high-pressure connector. Take care to install the proper O-ring.

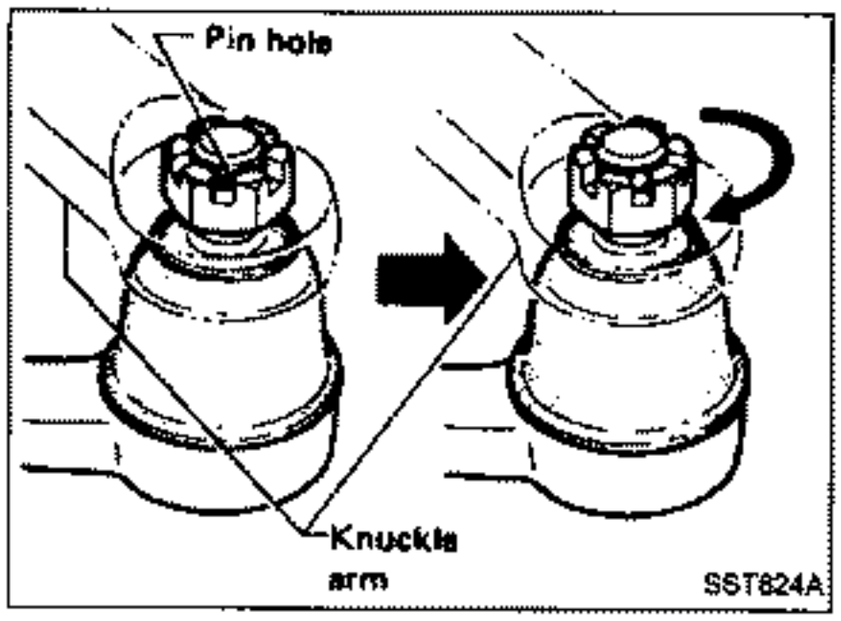

- Initially, tighten nut on tie-rod outer socket and knuckle arm to 29 to 49 N·m (3 to 5 kg-m, 22 to 36 ft-lb). Then tighten further to align nut groove with first pin hole so that cotter pin can be installed.

CAUTION:
Tightening torque must not exceed 49 N·m (5 kg-m, 36 ft-lb).

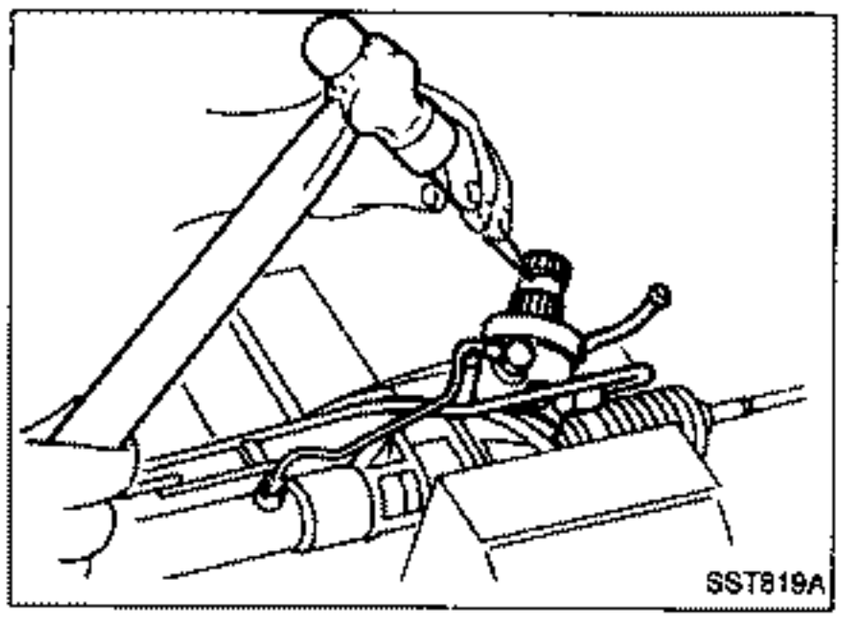

- Before removing lower joint from gear, set gear in neutral (wheels in straight-ahead position). After removing lower joint, put matching mark on pinion shaft and pinion housing to record neutral position of gear.
- To install, set left and right dust boots to equal deflection, and attach lower joint by aligning matching marks of pinion shaft and pinion housing.

POWER STEERING GEAR AND LINKAGE (Model PR26SE)

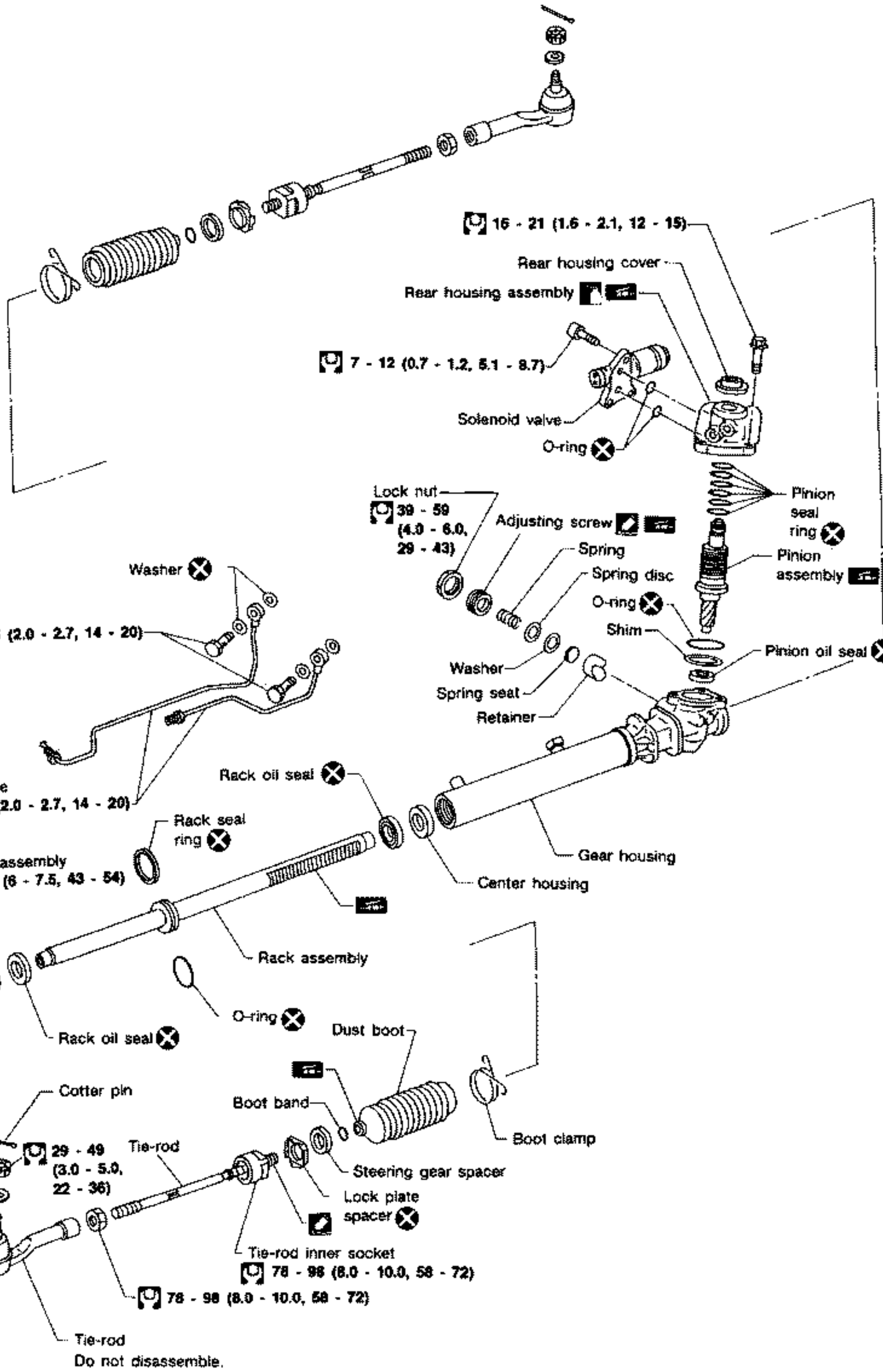

: N·m (kg-m, ft-lb)

SST552B

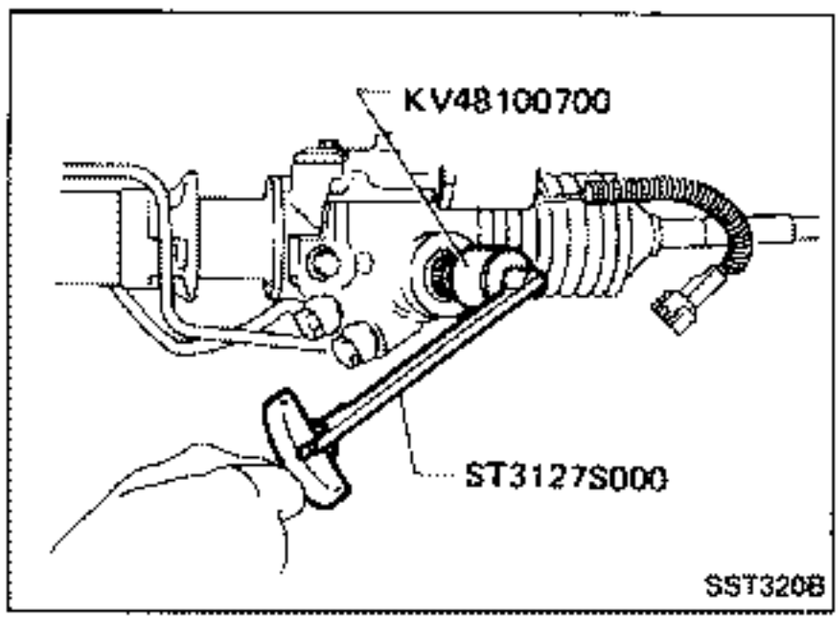

Disassembly

1. Prior to disassembling, measure pinion rotating torque. Record the pinion rotating torque as a reference.

- **Before measuring, disconnect cylinder tube and drain fluid.**
- **Use soft jaws when holding steering gear housing. Handle gear housing carefully, as it is made of aluminum. Do not grip cylinder in a vise.**

2. Remove pinion gear.

Be careful not to damage pinion gear when removing pinion seal ring.

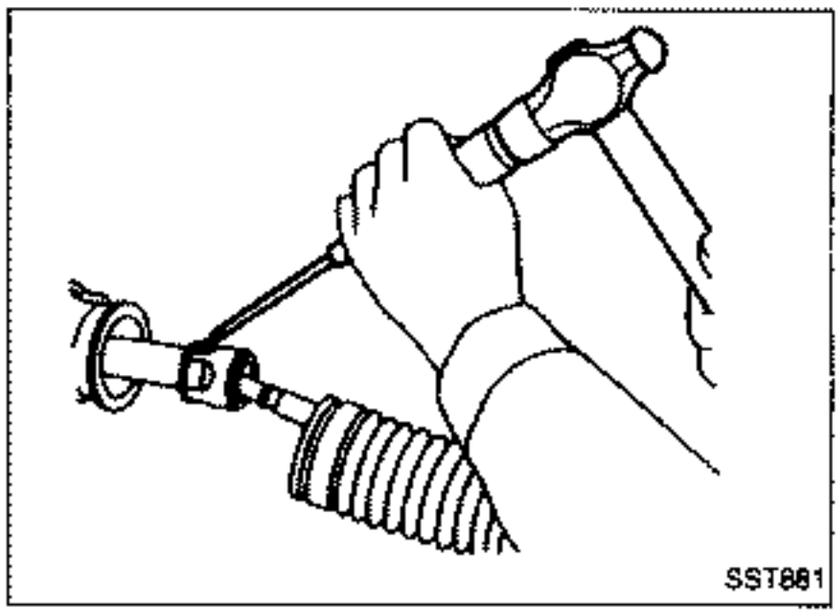

3. Remove tie-rod outer sockets and boots.
4. Loosen tie-rod inner socket by prying up staked portion, and remove socket.
5. Remove retainer.
6. Remove pinion assembly.

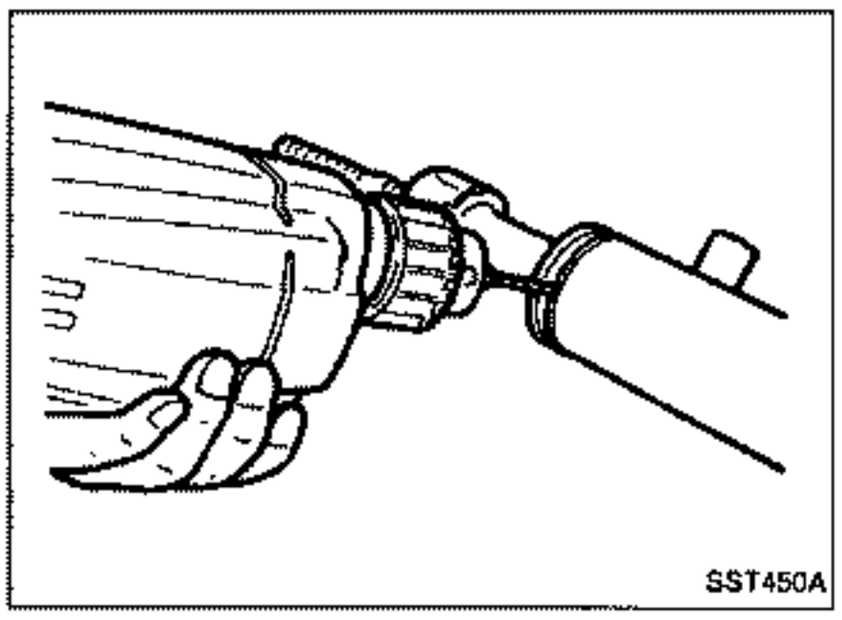

7. Drill staked portion of cylinder end cover with drill of 2 to 2.5 mm (0.079 to 0.098 in) diameter, until the staking is eliminated.

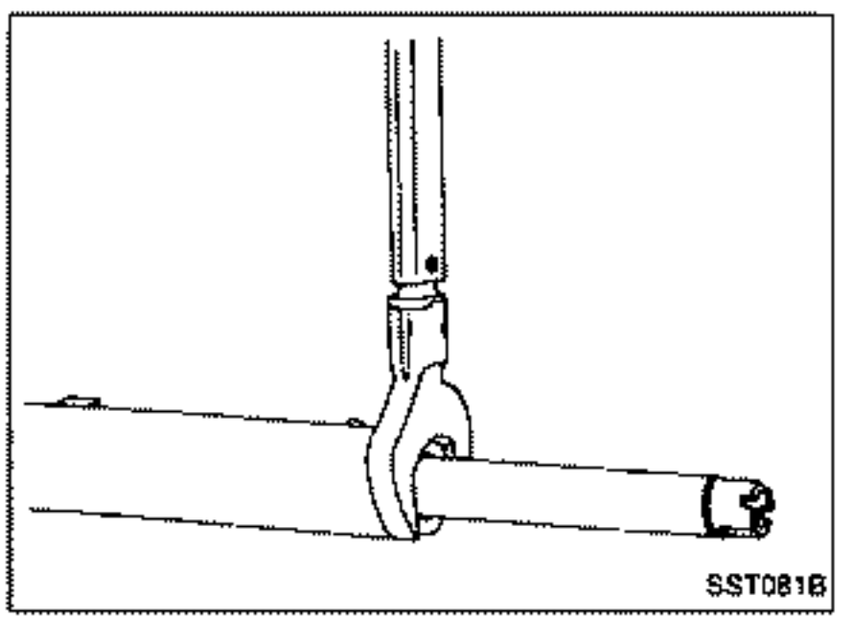

8. Remove gear housing end cover assembly with Tool.
9. Draw out rack assembly.

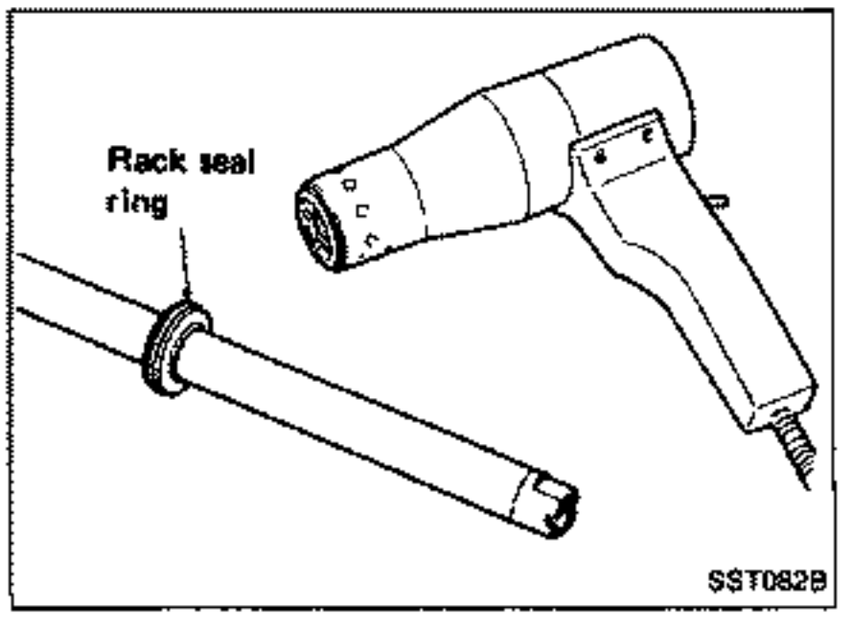

10. Remove rack seal ring.

- Using a heat gun, heat rack seal to approximately 40°C (104°F).
- Remove rack seal ring.
- Replace rack seal ring and O-ring with new ones.

Be careful not to damage rack.

Disassembly (Cont'd)

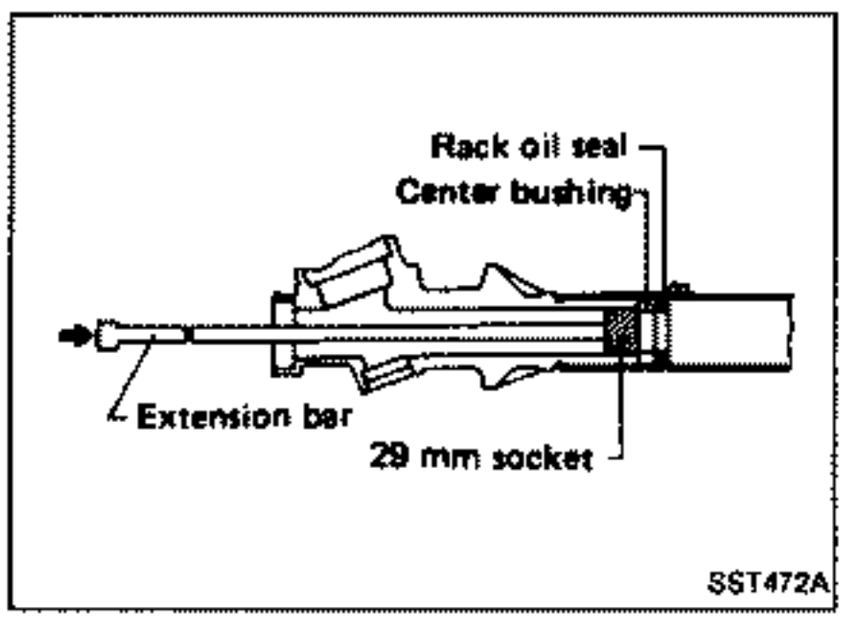

11. Remove center bushing and rack oil seal using tape wrapped socket and extension bar.

Do not scratch inner surfaces of pinion housing.

Inspection

Thoroughly clean all parts in cleaning solvent or automatic transmission fluid "DEXRON™" type, and blow dry with compressed air, if available.

BOOT

Check condition of boot. If cracked excessively, replace it.

RACK

Thoroughly examine rack gear. If damaged, cracked or worn, replace it.

PINION ASSEMBLY

- Thoroughly examine pinion gear. If pinion gear is damaged, cracked or worn, replace it.
- Inspect bearings to see that they roll freely and are free from cracked, pitted, or worn balls, rollers and races. Replace if necessary.

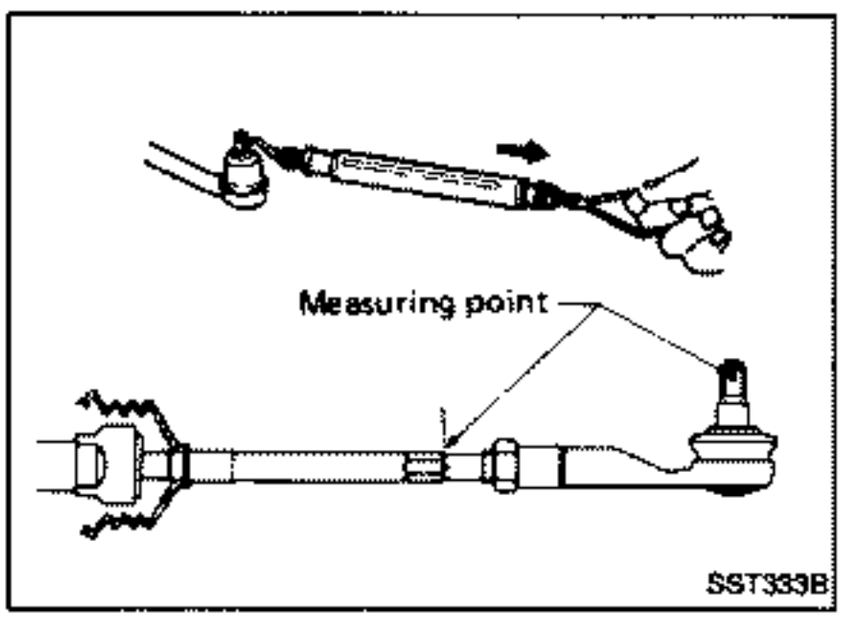

TIE-ROD OUTER AND INNER SOCKET

- Check ball joint for swinging force.
  Tie-rod outer ball joint:
  4.61 - 46.09 N
  (0.47 - 4.7 kg, 1.04 - 10.36 lb)
  Tie-rod inner ball joint:
  8.8 - 78.5 N
  (0.9 - 8.0 kg, 2.0 - 17.6 lb)

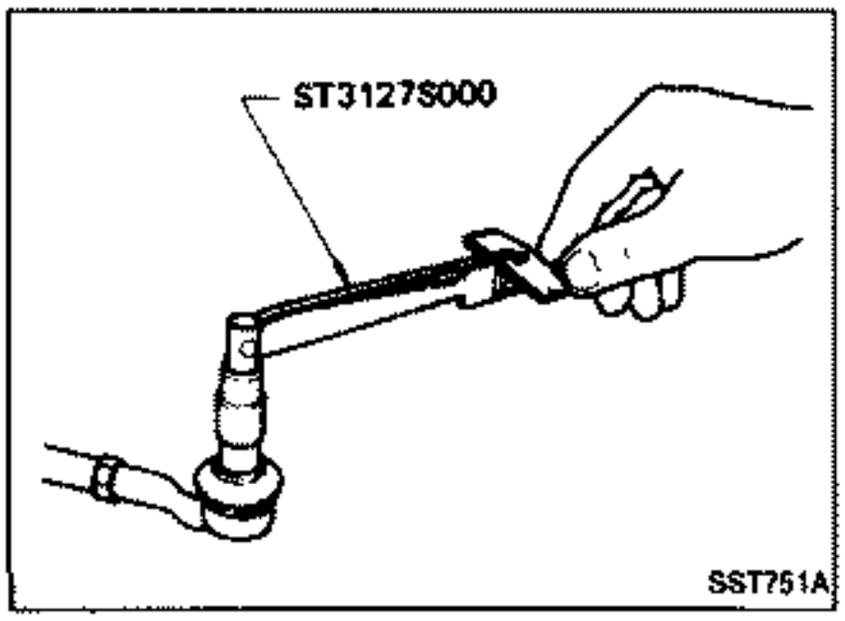

- Check ball joint for rotating torque.
  Tie-rod outer ball joint:
  0.29 - 2.94 N·m
  (3.0 - 30.0 kg-cm, 2.6 - 26.0 in-lb)
  Tie-rod inner ball joint:
  1.0 - 8.8 N·m (10 - 90 kg-cm, 8.7 - 78.1 in-lb)

Inspection (Cont'd)

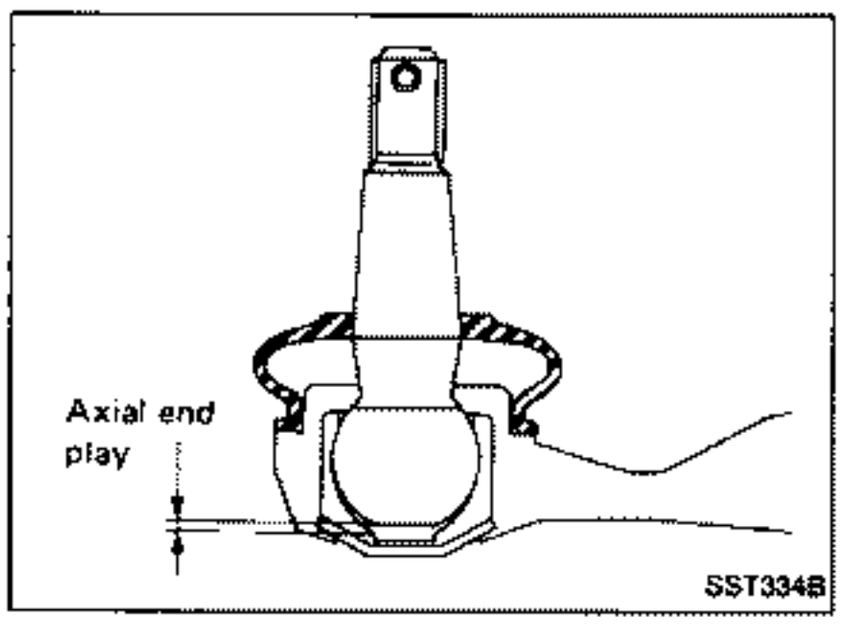

- Check ball joint for axial end play.
  Tie-rod outer ball joint:
  0 mm (0 in)
  Tie-rod inner ball joint:
  0 mm (0 in)
- Check condition of dust cover. If cracked excessively, replace it.

CYLINDER TUBES

Check cylinder tubes for scratches or other damage. Replace if necessary.

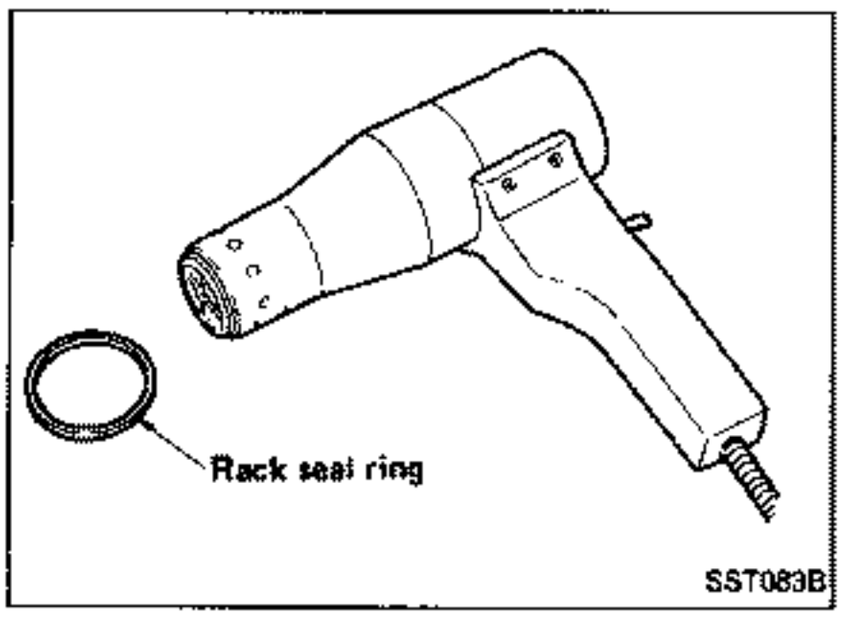

Assembly

1. Using a heat gun, heat rack seal ring (made of Teflon) to approximately 40°C (104°F) and install it onto rack with your hand.

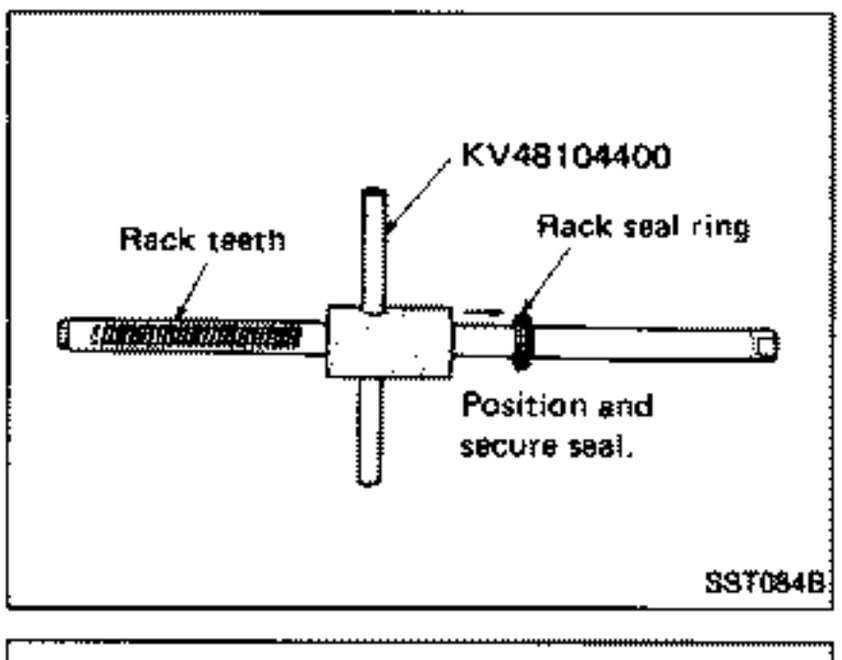

- Using Tool, compress periphery of rack seal ring (made of Teflon) to position and secure it on rack.

Always insert the tool from the rack gear side.

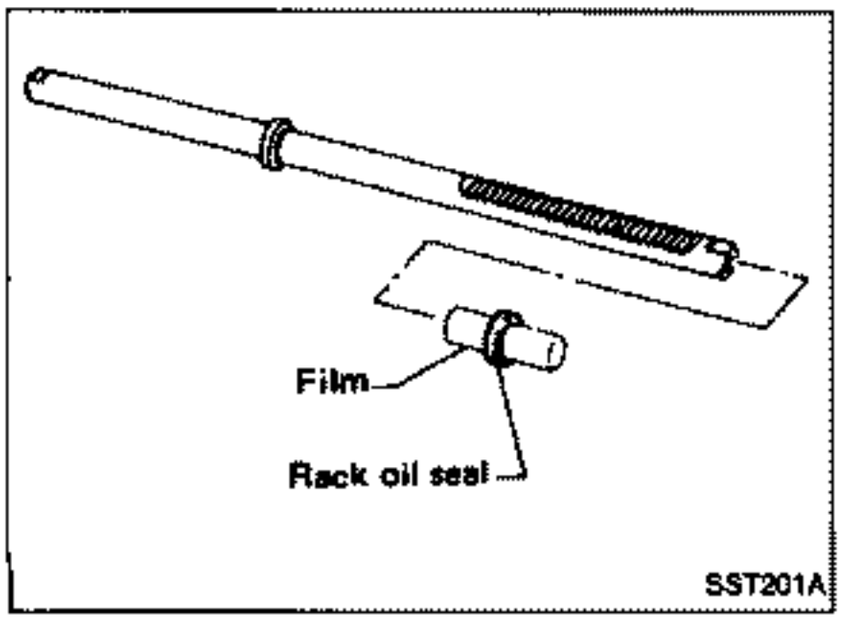

2. Insert rack oil seal.

- **Place plastic film into rack oil seal to prevent damage by rack teeth.**
- **Always remove plastic film after rack oil seal is positioned properly.**
- **Make sure lips of rack oil seal face each other.**

Assembly (Cont'd)

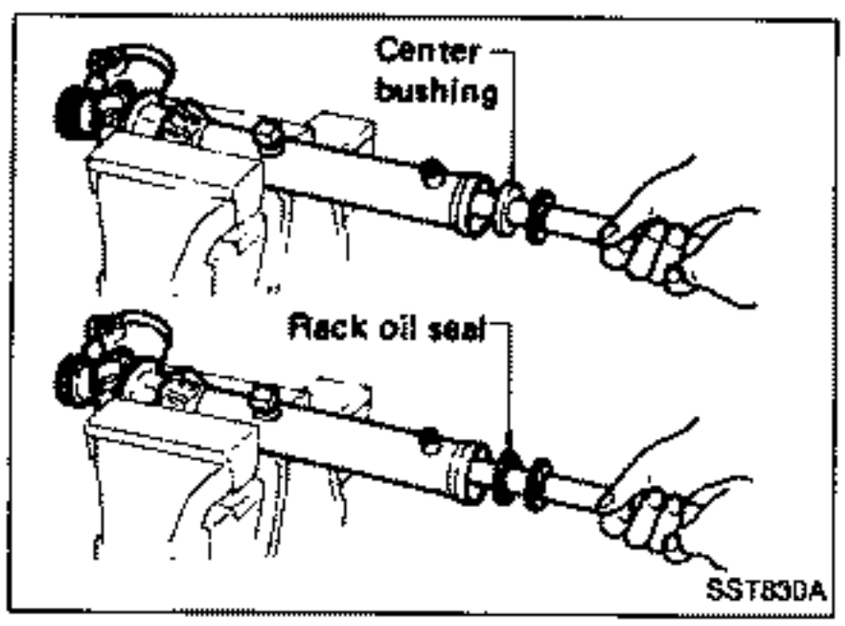

3. Install center bushing and rack oil seal with rack assembly.

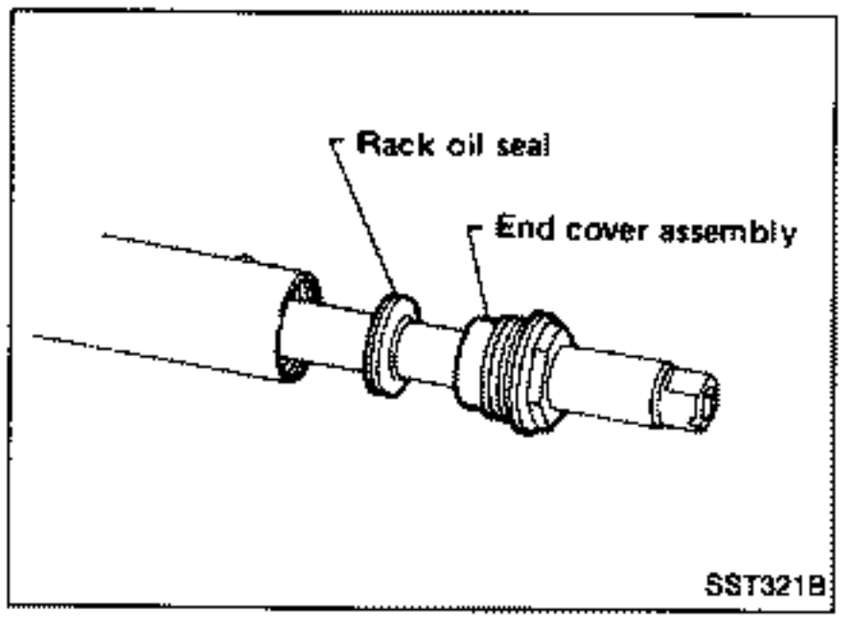

4. Insert rack oil seal and end cover assembly to rack then tighten end cover assembly.

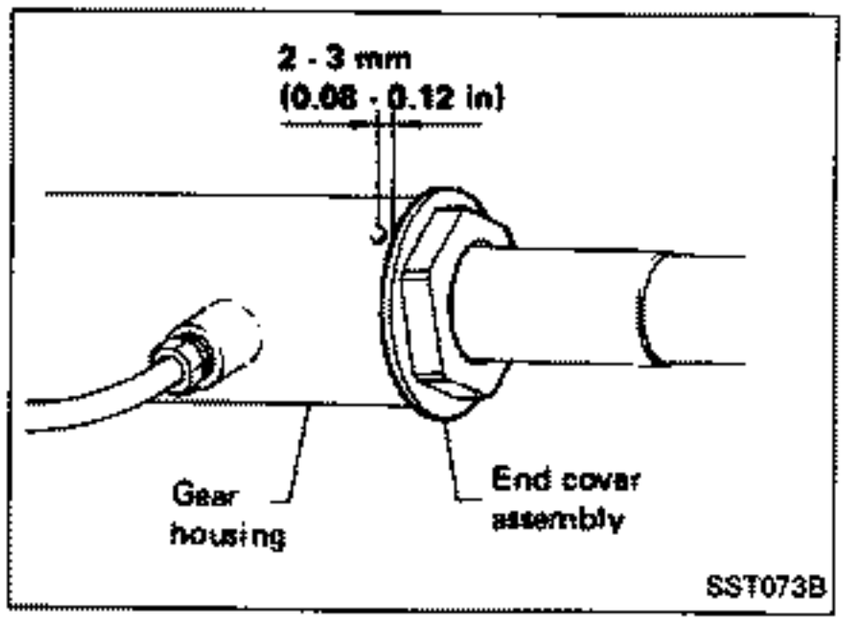

5. Fasten cylinder end cover assembly to gear housing by staking.

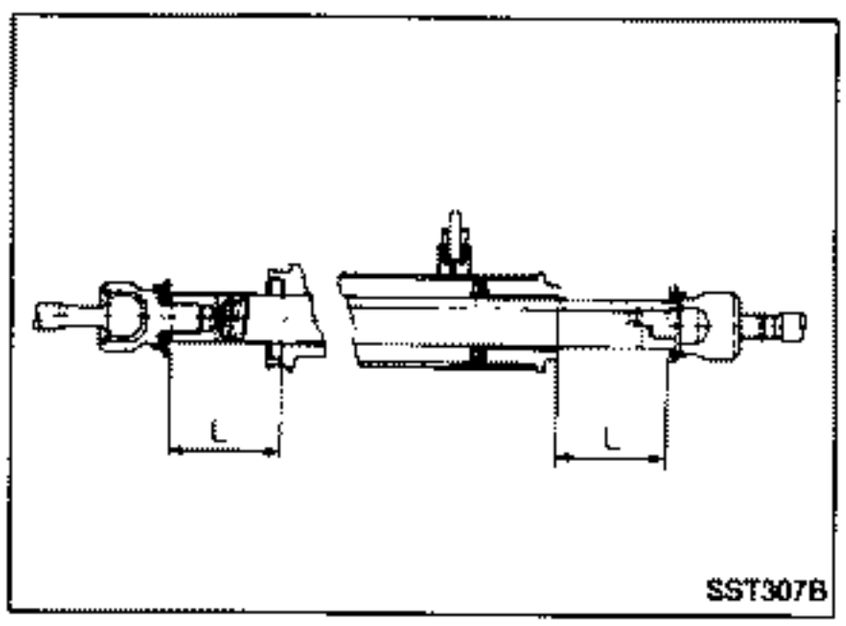

6. Set rack gear in neutral position.
   Rack stroke "L":
   Refer to S.D.S.

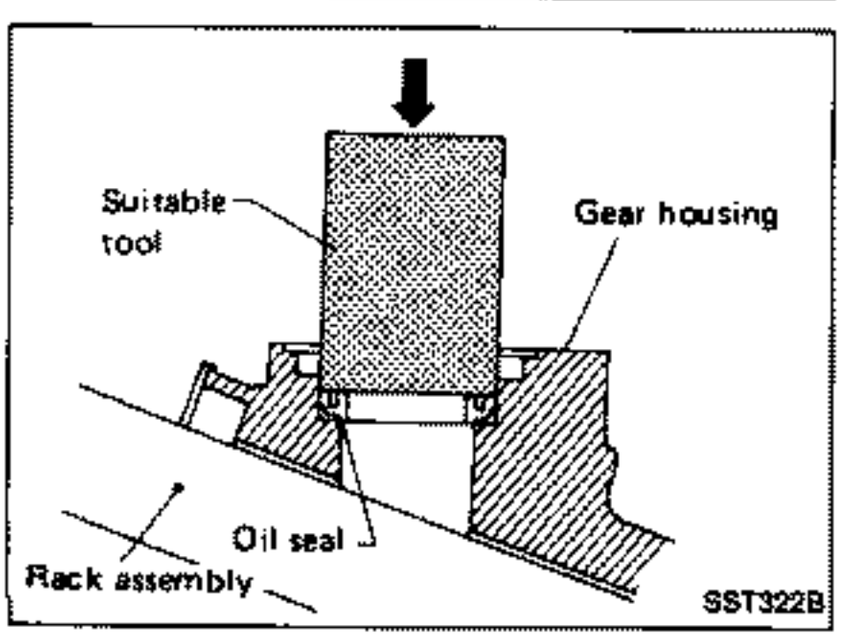

7. Coat seal lip of oil seal with multi-purpose grease and install new pinion oil seal to pinion housing with a suitable tool.
   - Make sure lip of oil seal faces up when installed.

Assembly (Cont'd)

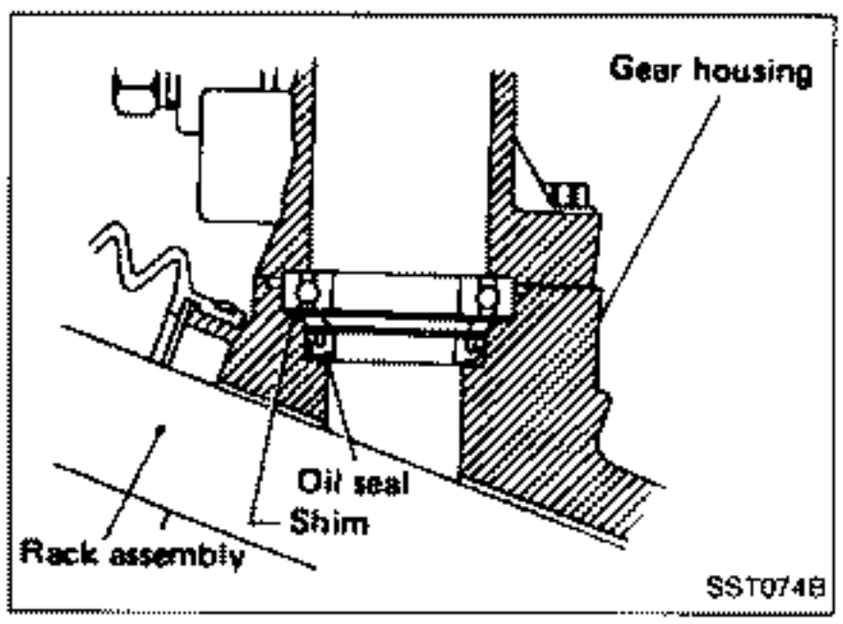

8. Install pinion bearing adjusting shim(s).
- Whenever pinion assembly, gear housing and rear housing are disassembled, replace shim(s) with new ones. Always use the same number of shim(s) when replacing.

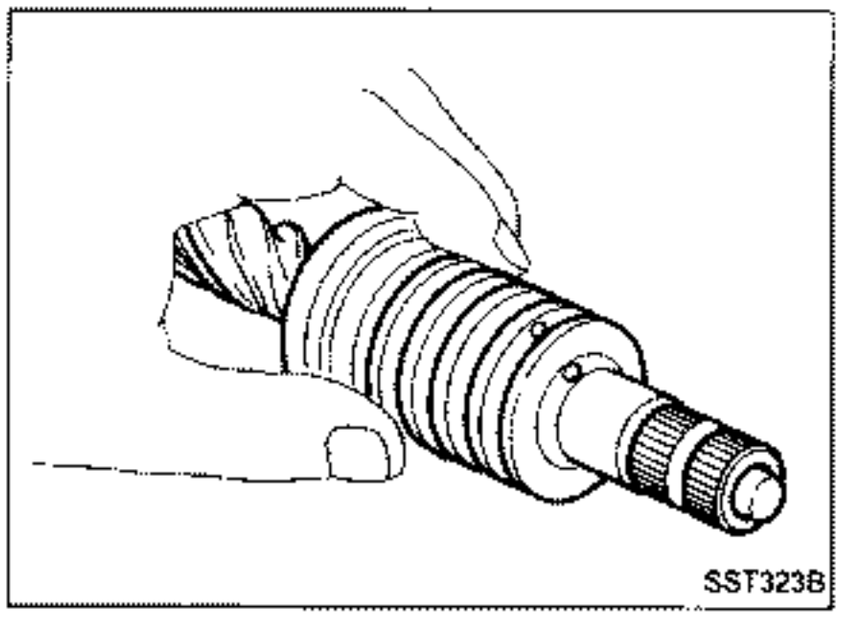

9. Install pinion seal ring on pinion gear assembly.
- Using a heat gun, heat pinion seal ring to approximately 40°C (104°F) before installing it onto pinion gear assembly.
- Make sure pinion seal ring is properly settled in valve groove.

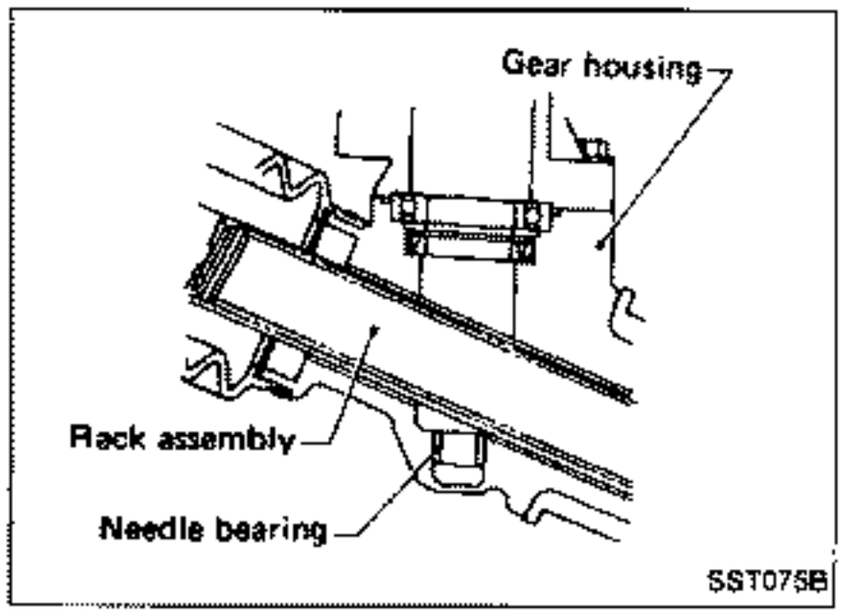

10. Apply a coat of multi-purpose grease to needle bearing roller and oil seal lip before installing pinion assembly in gear housing.

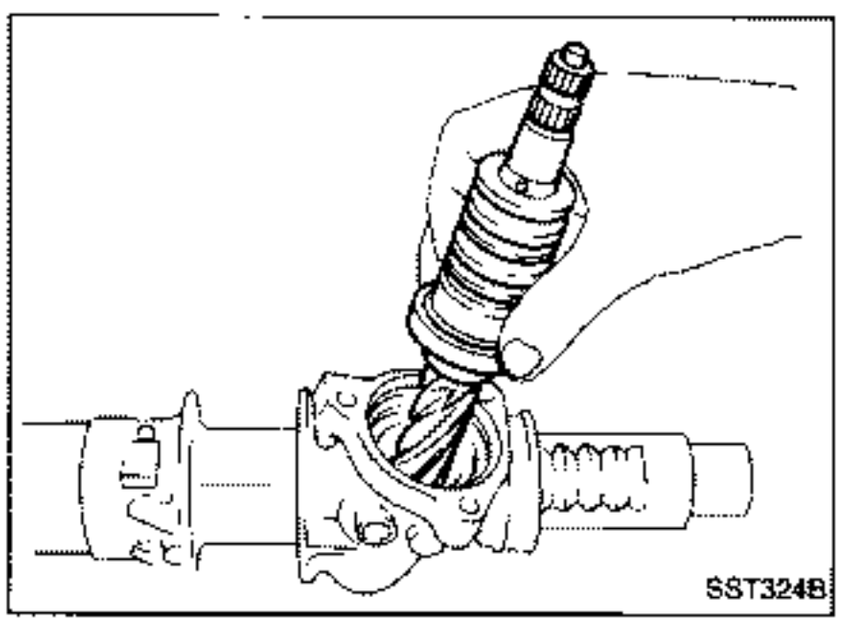

11. Install pinion assembly to pinion housing.

Be careful not to damage pinion oil seal.

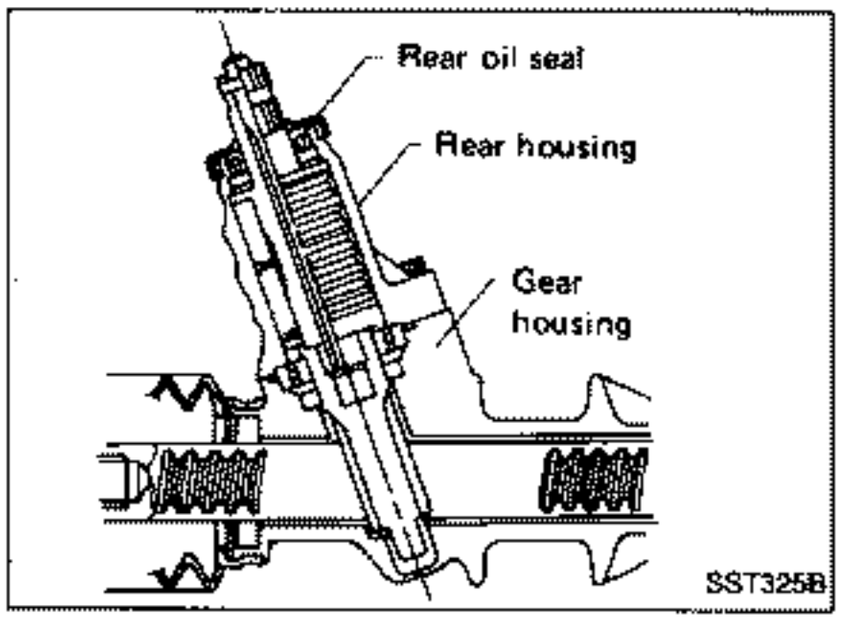

12. Apply a coat of multi-purpose grease to rear oil seal lip before installing rear housing.

Assembly (Cont'd)

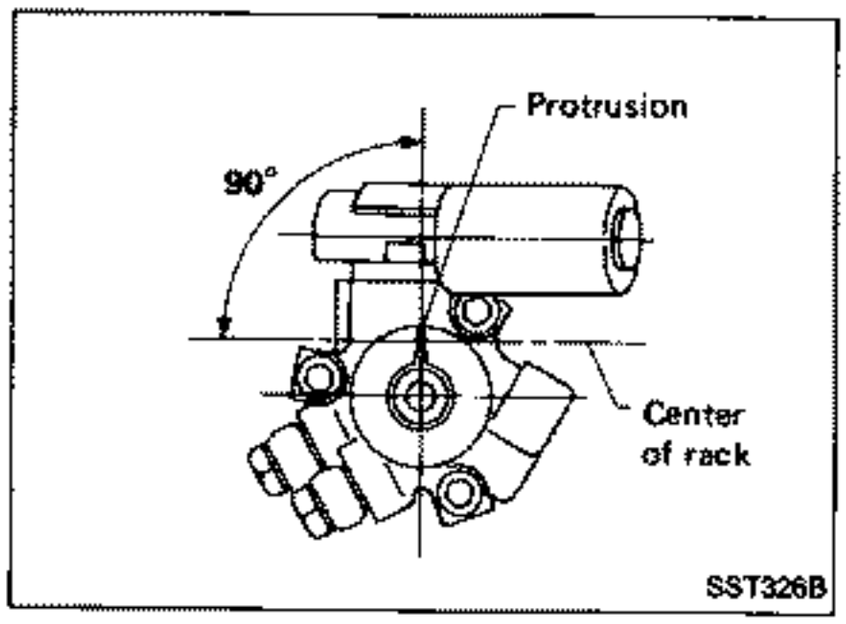

13. Install rear cover cap so that protrusion of rear housing cover is positioned as shown in figure at left.

Be careful not to damage worm ring and oil seal.

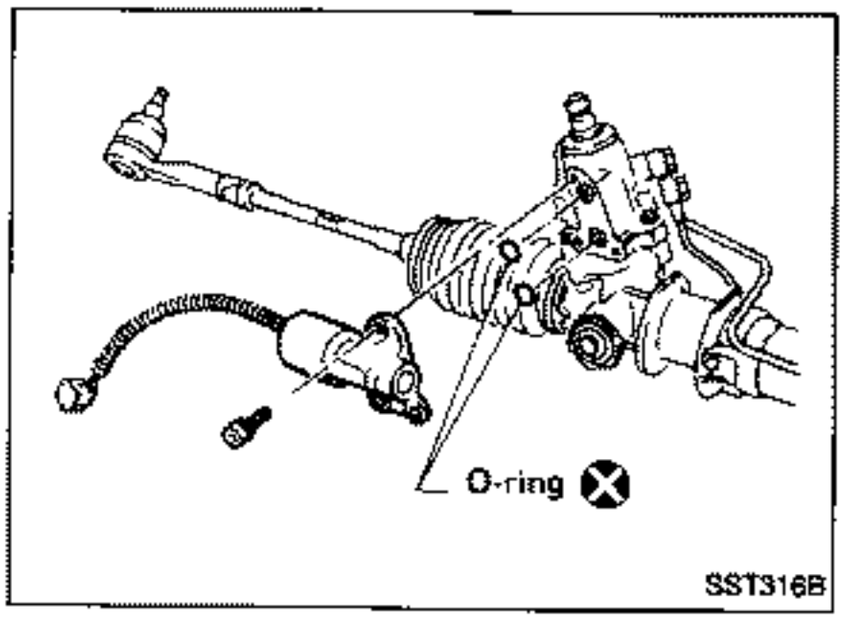

14. Install solenoid valve.

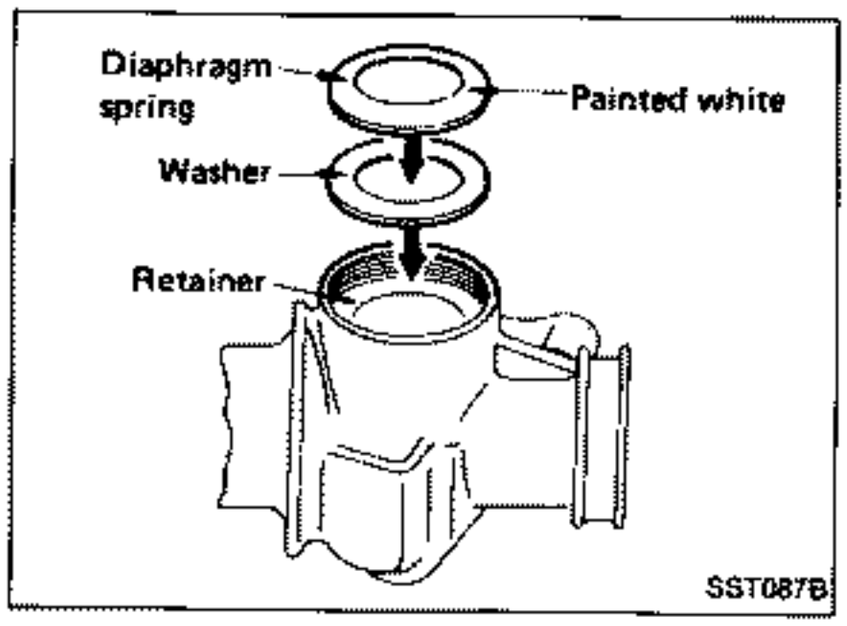

15. Install diaphragm spring at retainer.
- Always install retainer, spring washer and diaphragm spring in that order.
- Make sure convex end (painted white) of diaphragm spring faces outward when installing.

16. Install retainer spring and adjusting screw temporarily.

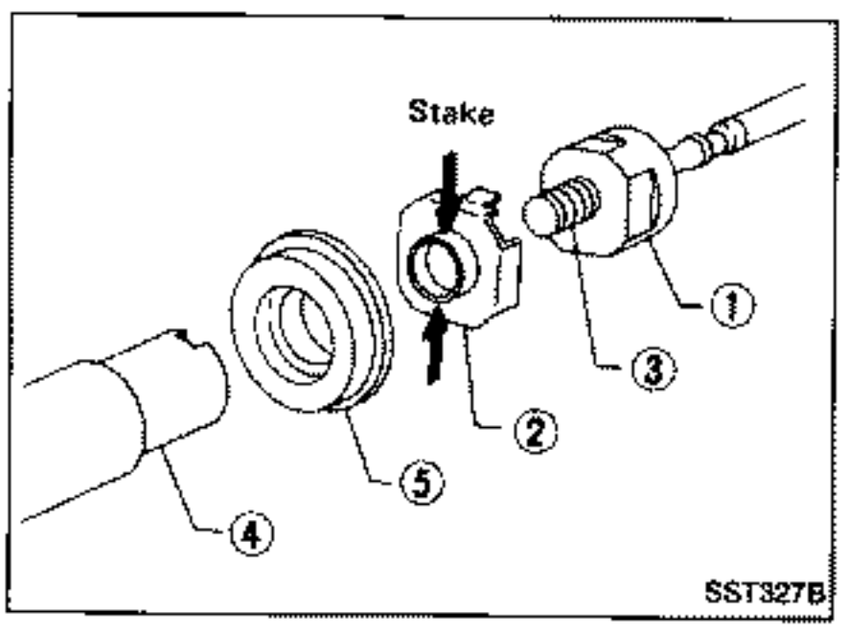

CAUTION:
Ensure steering gear spacer is installed with rubber side facing rack.

- Attach lock plate ② to side rod inner socket ①.
- Insert steering gear spacer ⑤ to rack ④.
- Apply locking sealant to inner socket threads ③. Screw inner socket into rack ④ and tighten to specified torque.
- Stake lock plate at two places.

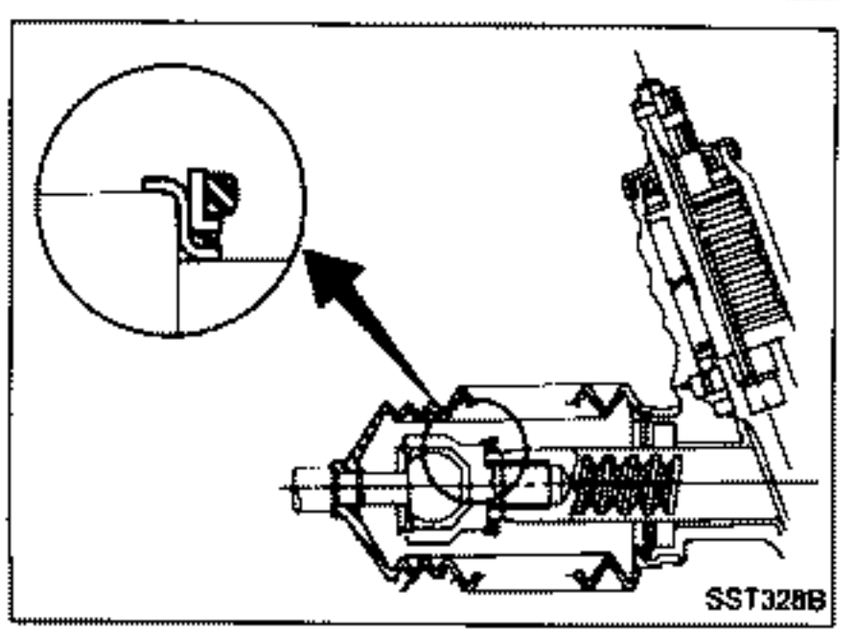

17. Install steering gear spacer ⑤ to lock plate ②.

Assembly (Cont'd)

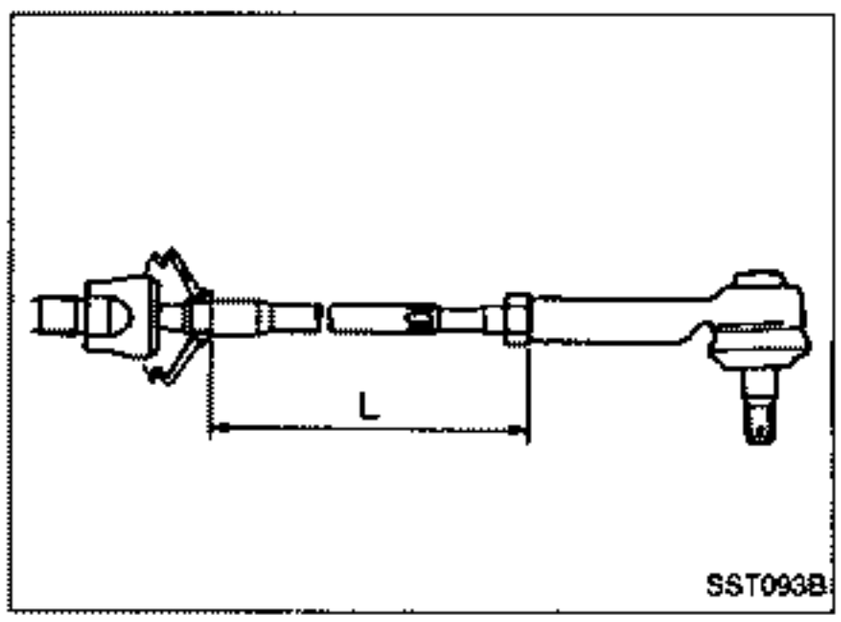

18. Tighten outer socket lock nut.
    Tie-rod length "L":
    Refer to S.D.S.

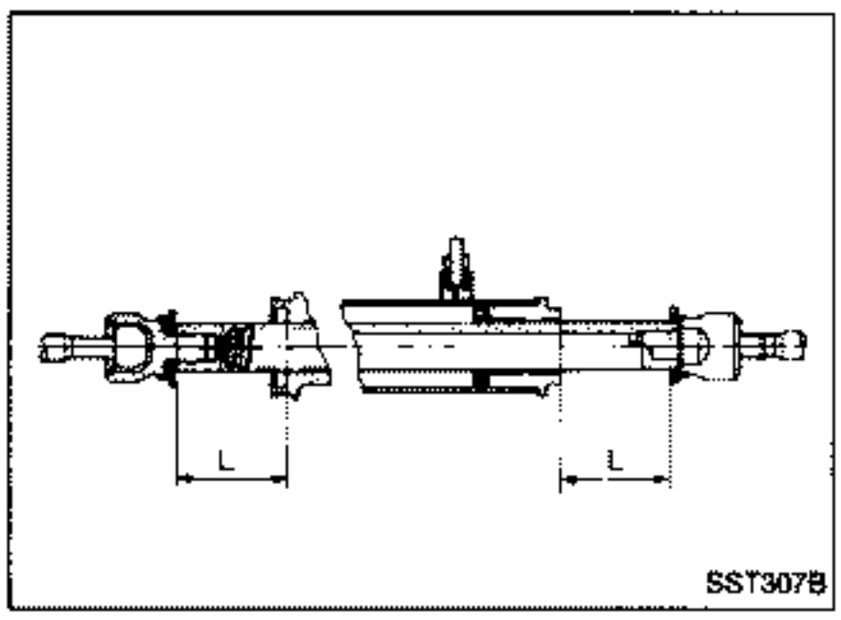

19. Measure rack stroke.
    Rack stroke "L":
    Refer to S.D.S.

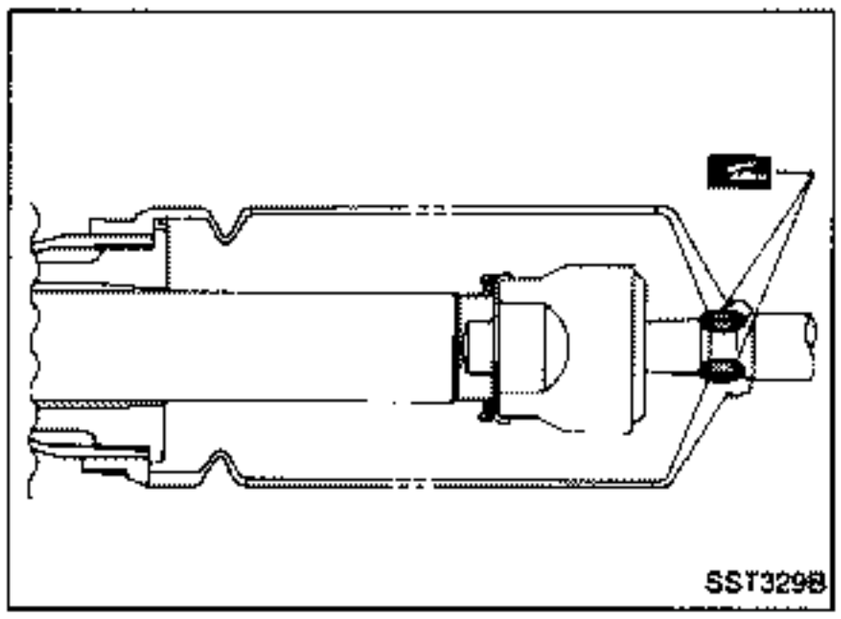

20. Before installing boot, coat the contact surfaces between boot and tie-rod with grease.

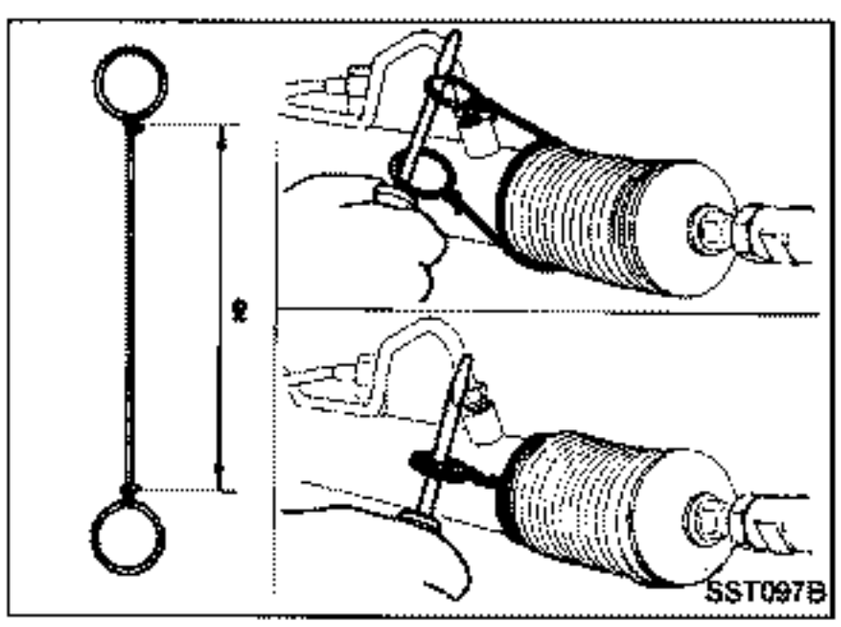

21. Install boot clamps.
- To install, wrap boot clamp around boot groove twice. Tighten clamp by twisting rings at both ends 4 to 4-1/2 turns with screwdriver while pulling with a force of approx. 98 N (10 kg, 22 lb).

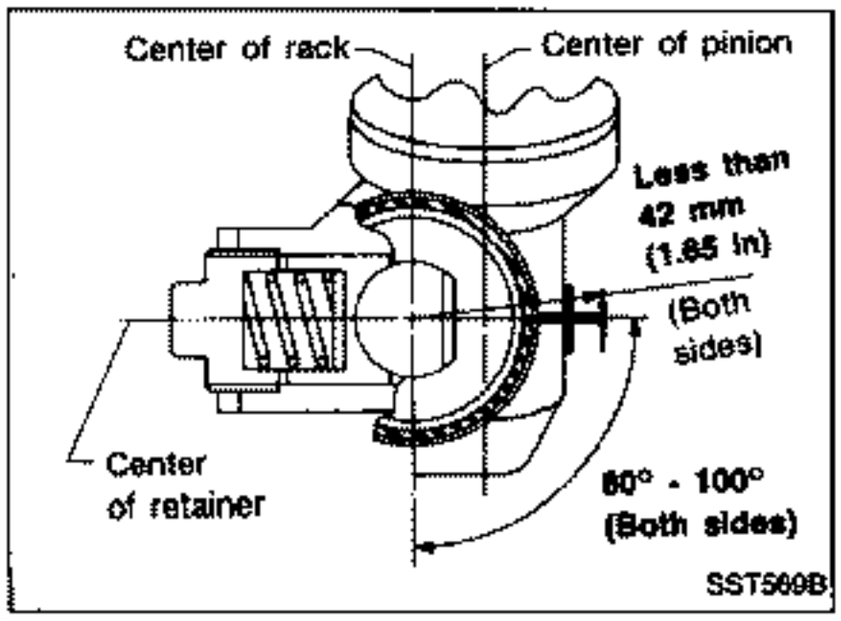

- Install boot clamps so that they are behind the steering gear housing when steering gear is attached to the vehicle. (This will prevent interference with other parts.)

Assembly (Cont'd)

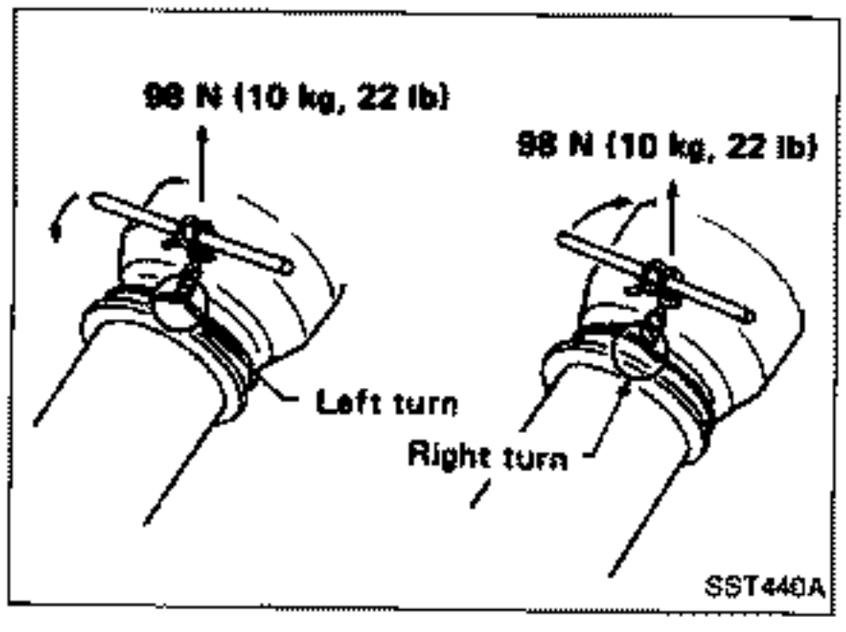

- Twist boot clamp in the direction shown in figure at left.

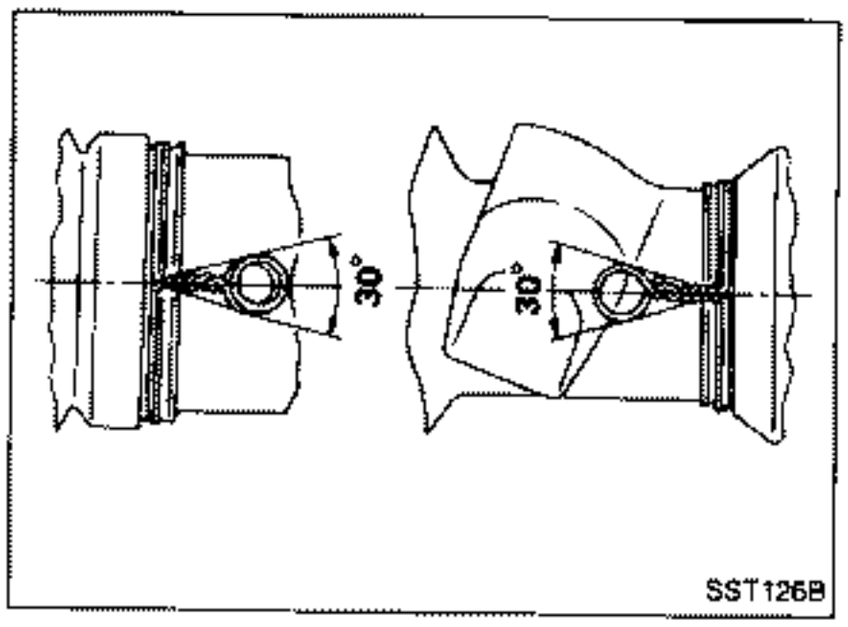

- After twisting boot clamp, bend twisted and diagonally so it does not contact boot.

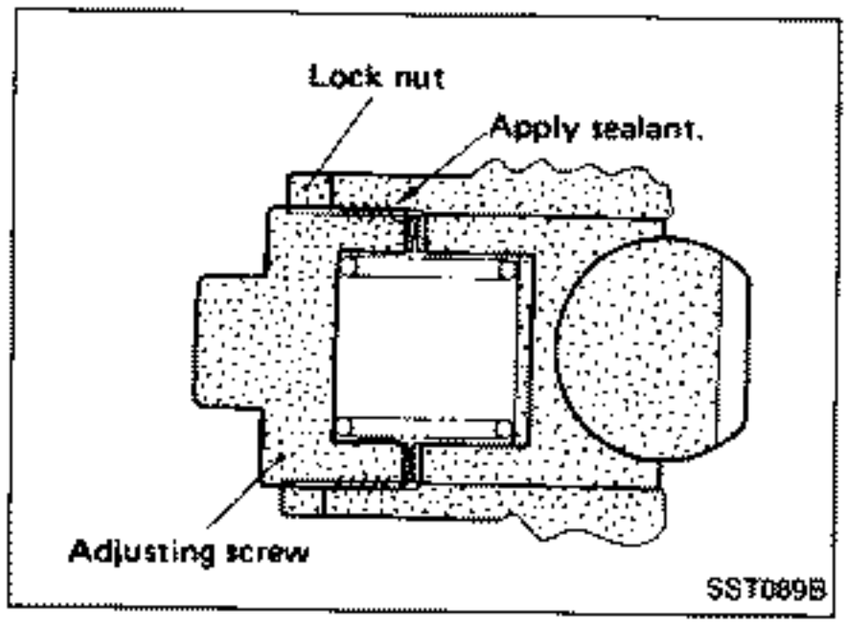

Adjustment

Adjust pinion rotating torque as follows:

1. Set gears to Neutral without fluid in the gear.
2. Coat the adjusting screw with locking sealant and screw it in.
3. Lightly tighten lock nut.
4. Tighten adjusting screw to a torque of 4.9 to 5.9 N·m (50 to 60 kg-cm, 43 to 52 in-lb).
5. Loosen adjusting screw, then retighten it to 0.05 to 0.20 N·m (0.5 to 2 kg-cm, 0.43 to 1.74 in-lb).
6. Move rack over its entire stroke several times.
7. Measure pinion rotating torque within the range of 180° from neutral position.
   Stop the gear at the point of maximum torque.
8. Loosen adjusting screw, then retighten it to 4.9 N·m (50 kg-cm, 43 in-lb).
9. Loosen adjusting screw by 60° to 100°.

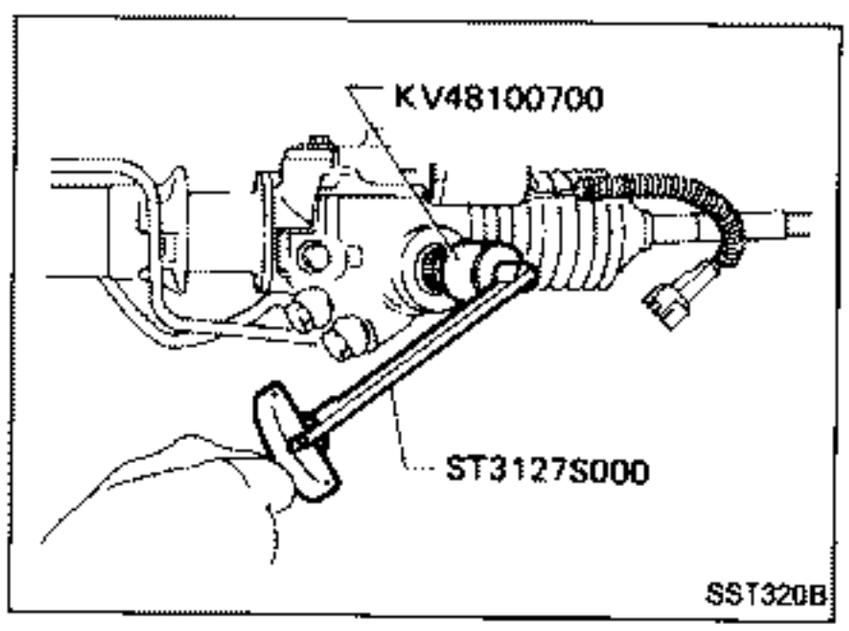

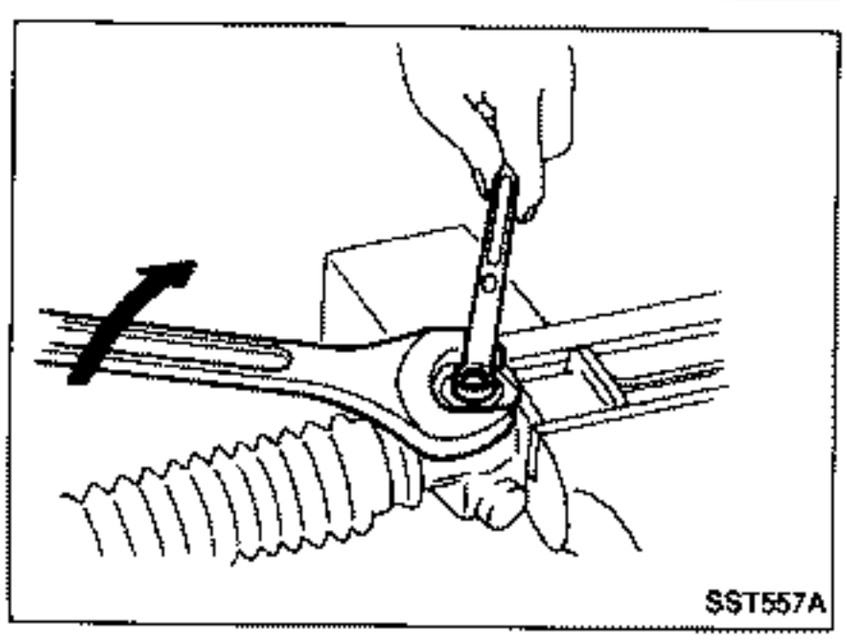

10. Prevent adjusting screw from turning, and tighten lock nut to specified torque.

Adjustment (Cont'd)

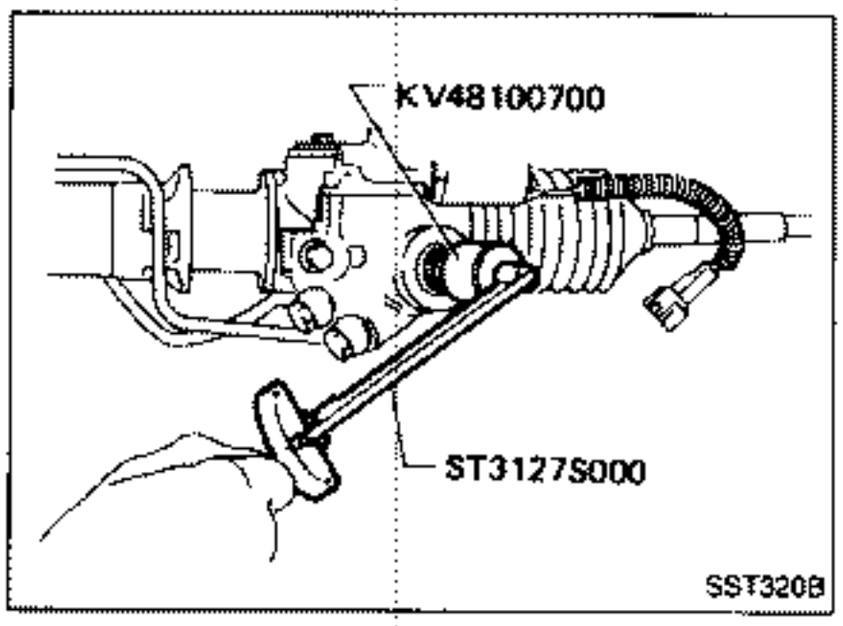

11. Measure pinion rotating torque.

Within 100° from the neutral position:
Average rotating torque
0.8 - 1.3 N·m (8 - 13 kg-cm, 6.9 - 11.3 in-lb)
Maximum torque deviation
0.4 N·m (4 kg-cm, 3.5 in-lb)
Except for above measuring range:
Maximum rotating torque
1.9 N·m (19 kg-cm, 16 in-lb)
Maximum force deviation
0.6 N·m (6 kg-cm, 5.2 in-lb)

- If pinion rotating torque is not within specifications, readjust it by starting from procedure 4. If pinion rotating torque is still out of specifications after readjustment, replace steering gear assembly.

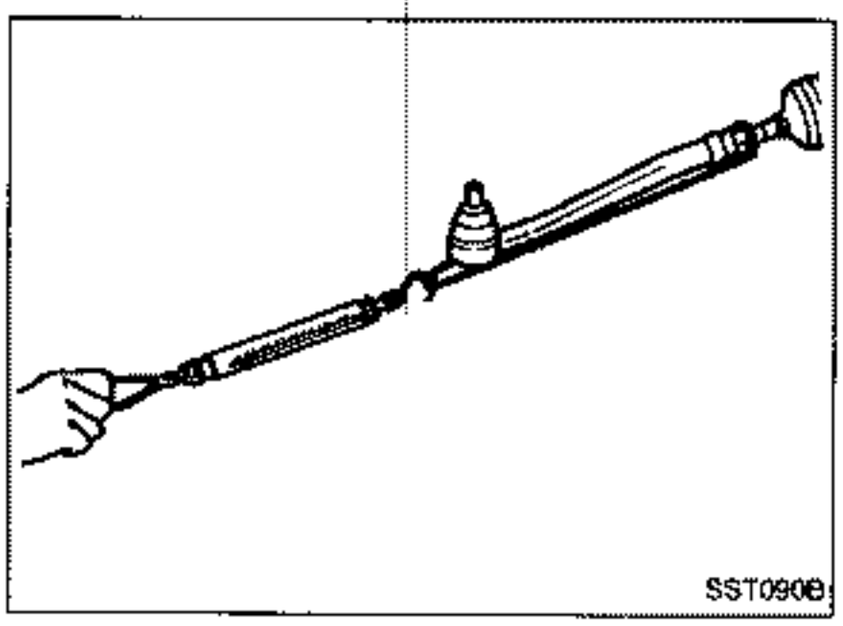

12. Check rack sliding force on vehicle as follows:
a. Install steering gear onto vehicle, but do not connect tie-rod to knuckle arm.
b. Connect all piping and fill with steering fluid.
c. Start engine and bleed air completely.
d. Disconnect steering column lower joint from the gear.
e. Keep engine at idle and make sure steering fluid has reached normal operating temperature.
f. While pulling tie-rod slowly in the ±11.5 mm (±0.453 in) range from the neutral position, make sure rack sliding force is within specification.

Average rack sliding force:
Without HICAS
206 - 265 N (21 - 27 kg, 46 - 60 lb)
With HICAS
201.0 - 250.1 N (20.5 - 25.5 kg, 45.2 - 56.2 lb)

g. Check sliding force outside above range.

Maximum rack sliding force:
Not more than 39 N (4 kg, 9 lb) beyond above value

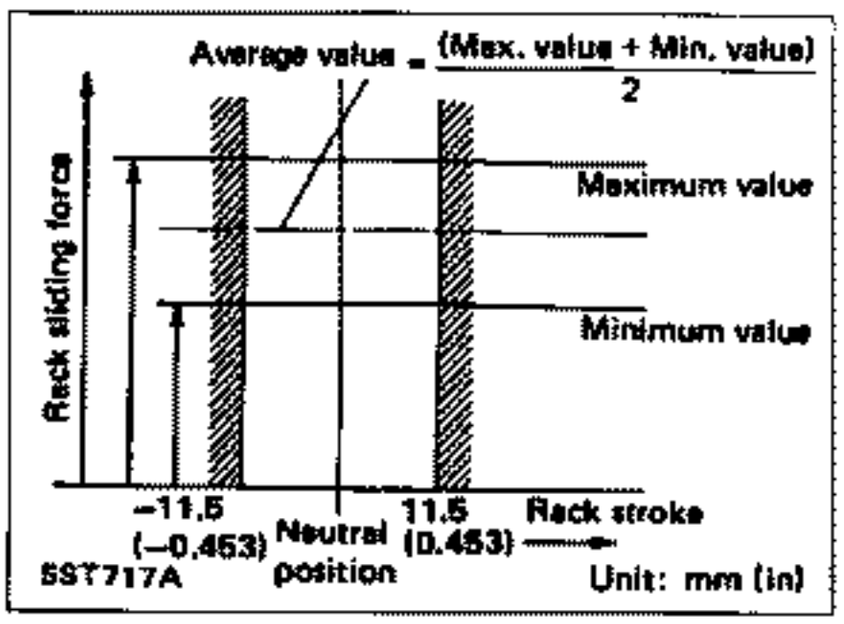

- If rack sliding force is not within specification, readjust by repeating adjustment procedure from the beginning.
- If rack sliding force is still out of specification after readjustment, gear assembly needs to be replaced.

Disassembly and Assembly

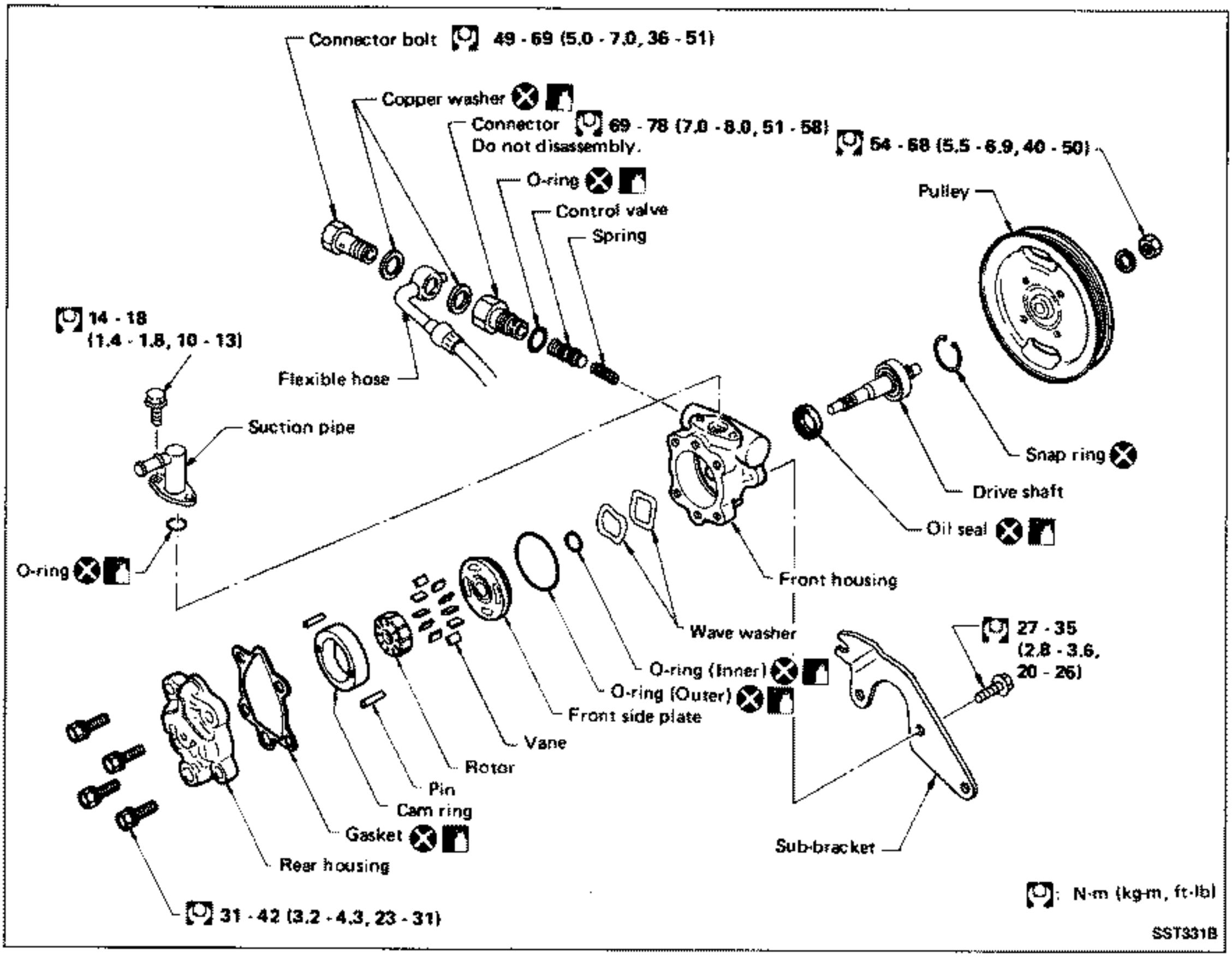

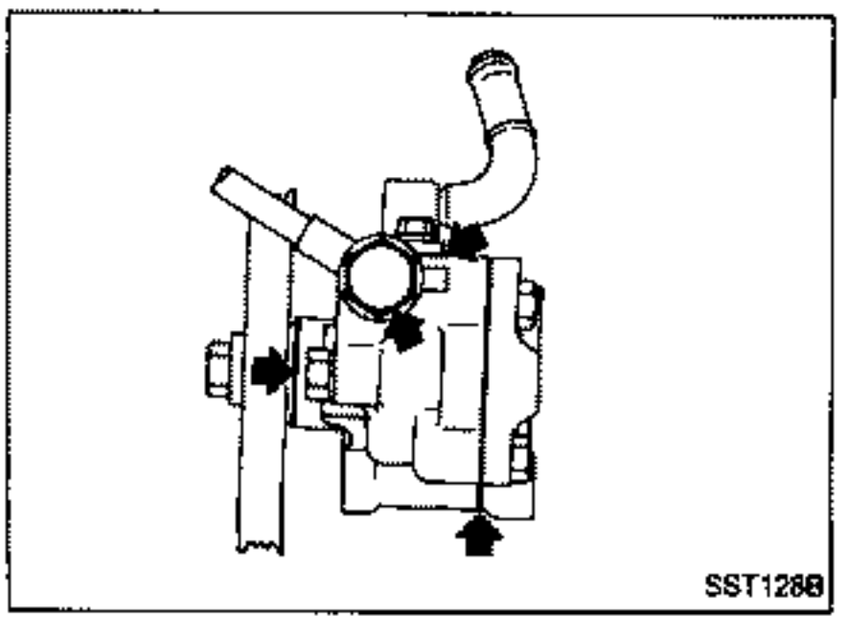

Pre-disassembly Inspection

Disassemble the power steering oil pump only if the following items are found.

- Oil leak from any point shown in the figure.
- Deformed or damaged pulley.
- Poor performance

Disassembly

CAUTION:

- **Parts which can be disassembled are strictly limited. Never disassemble parts other than those specified.**
- **Disassemble in as clean a place as possible.**
- **Clean your hands before disassembly.**
- **Do not use rags; use nylon cloths or paper towels.**
- **Follow the procedures and cautions in the Service Manual.**
- **When disassembling and reassembling, do not let foreign matter enter or contact the parts.**

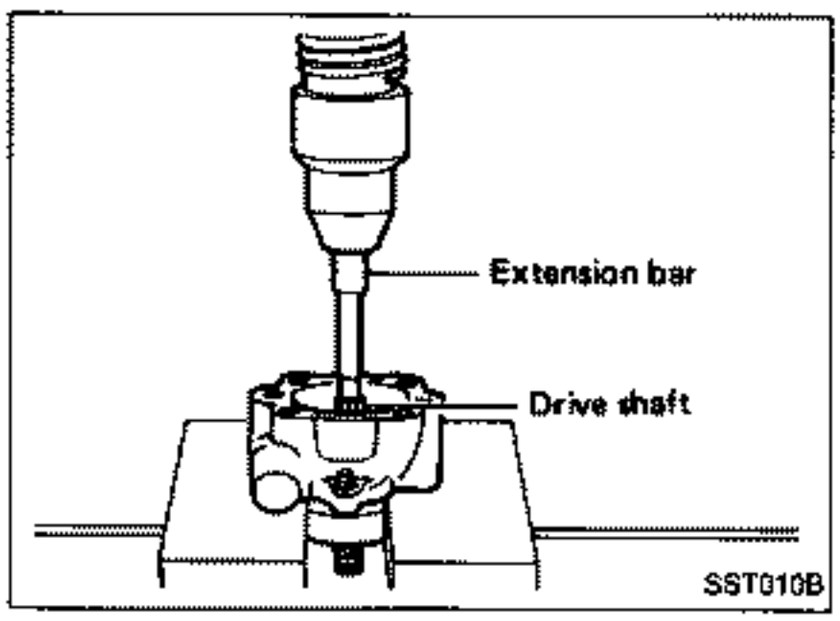

- Remove snap ring, then draw drive shaft out.

Be careful not to drop drive shaft.

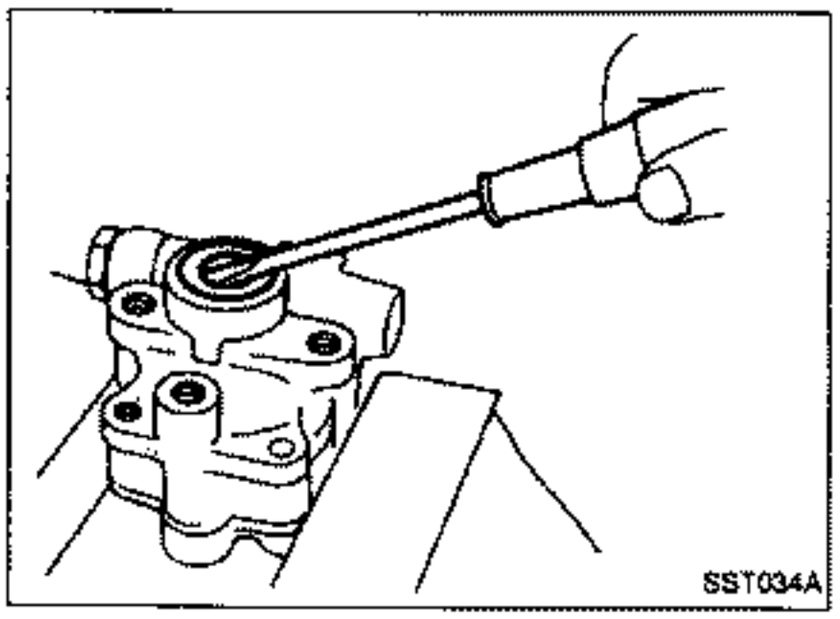

- Remove oil seal.

Be careful not to damage front housing.

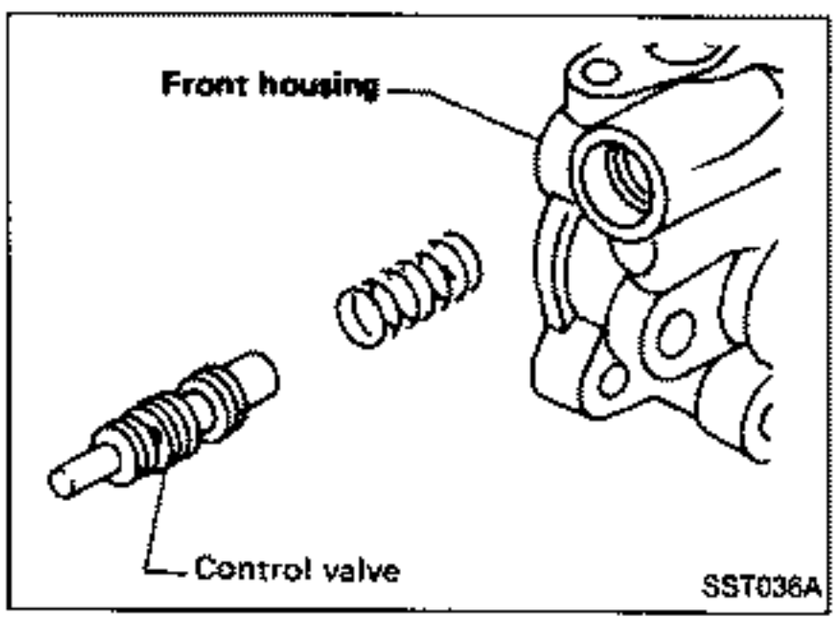

- Remove connector.

Be careful not to drop control valve.

Inspection

Inspect each component part for wear, deformation, scratches, and cracks. If damage is found, replace the part.

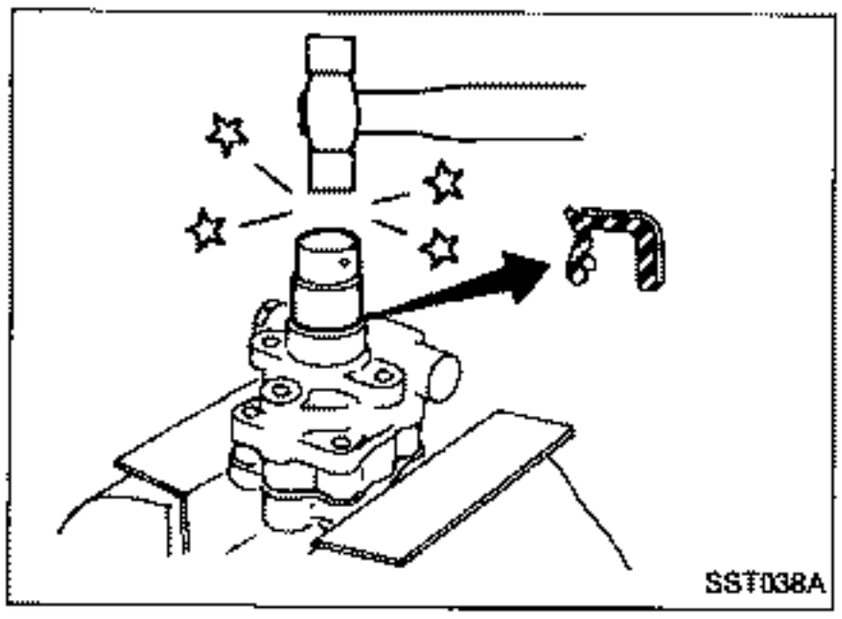

Assembly

Assemble oil pump, noting the following instructions.

- Make sure O-rings and oil seal are properly installed.
- Always install new O-rings and oil seal.
- Be careful of oil seal direction.
- Cam ring, rotor and vanes must be replaced as a set if necessary.
- Coat each part with A.T.F. when assembling.

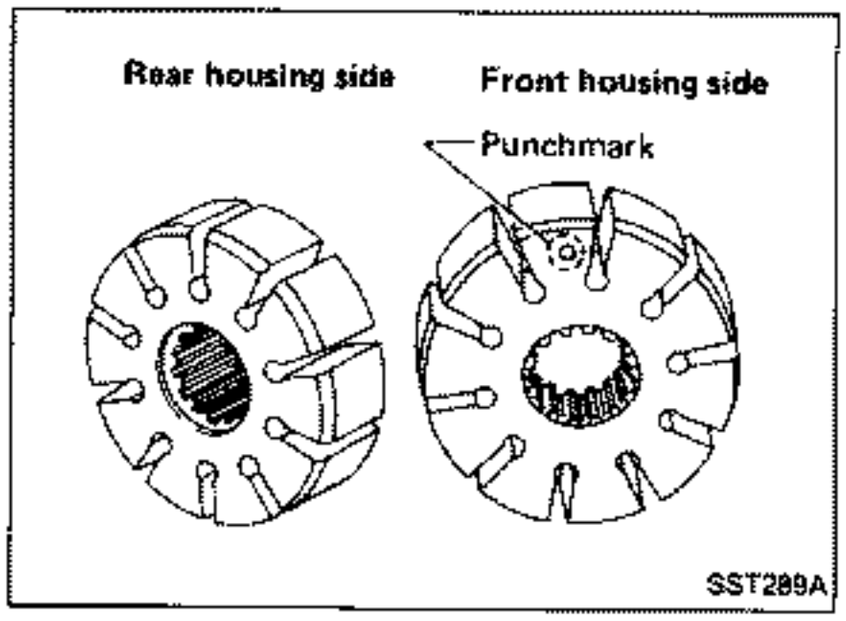

- Pay attention to rotor direction.

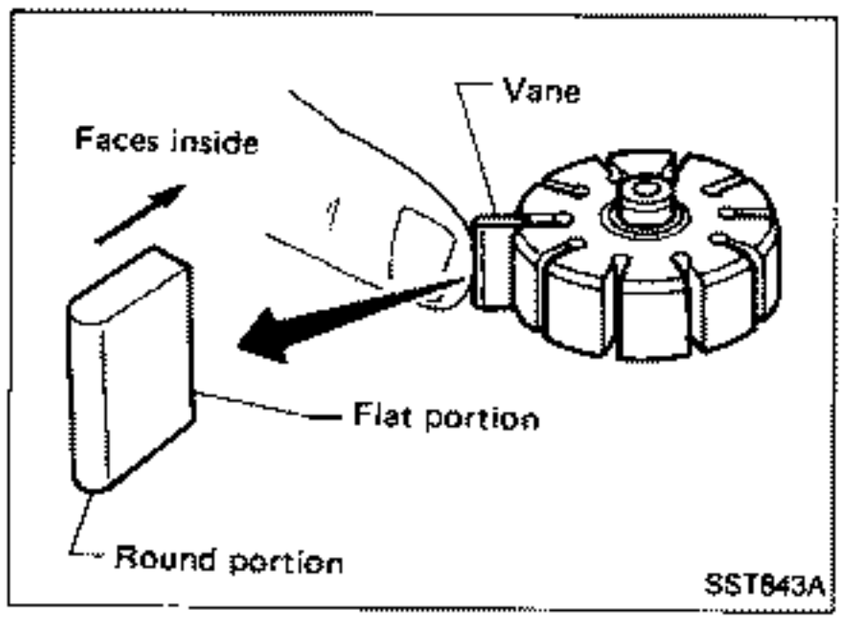

- When assembling vanes to rotor, rounded surfaces of vanes must face cam ring side.

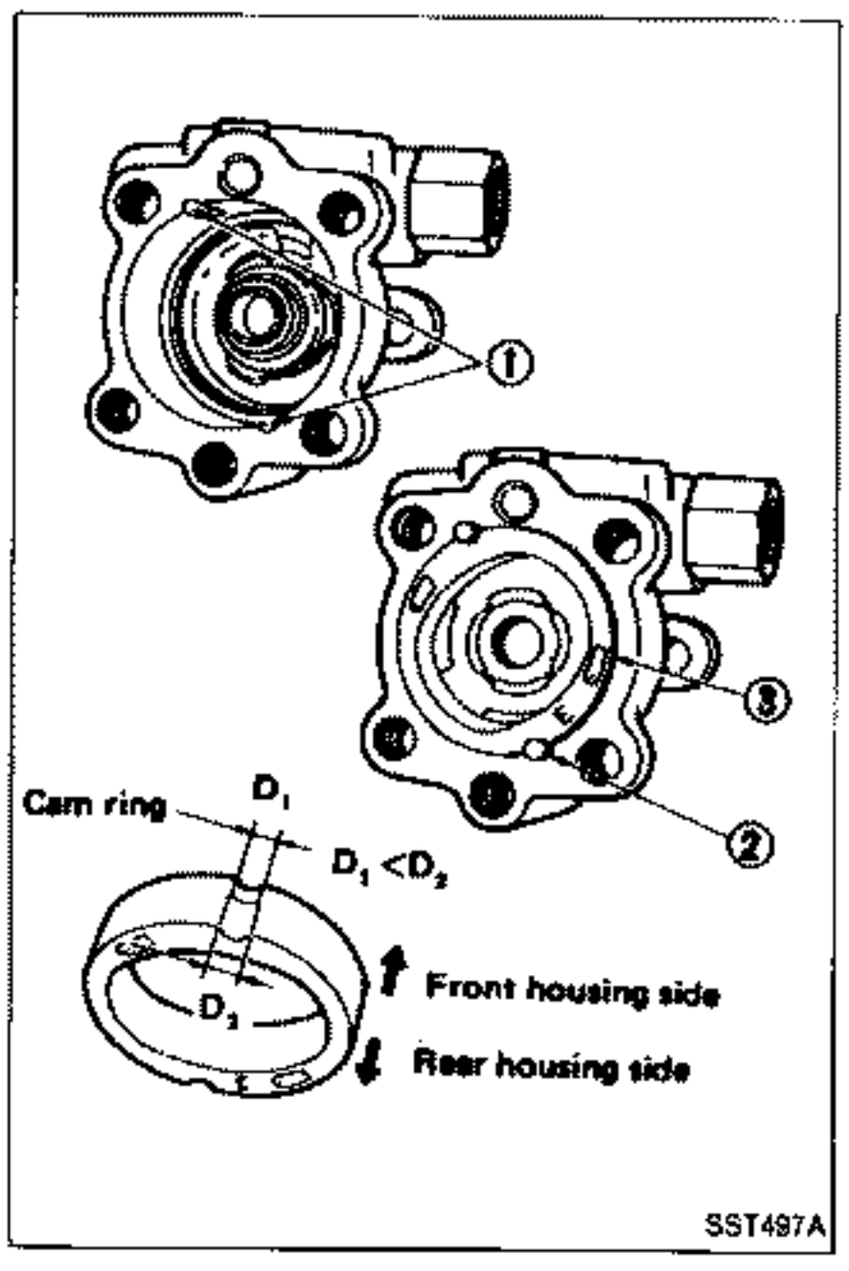

- Insert pin ② into pin groove ① of front housing and front side plate. Then install cam ring ③ as shown at left.

Hydraulic Circuit

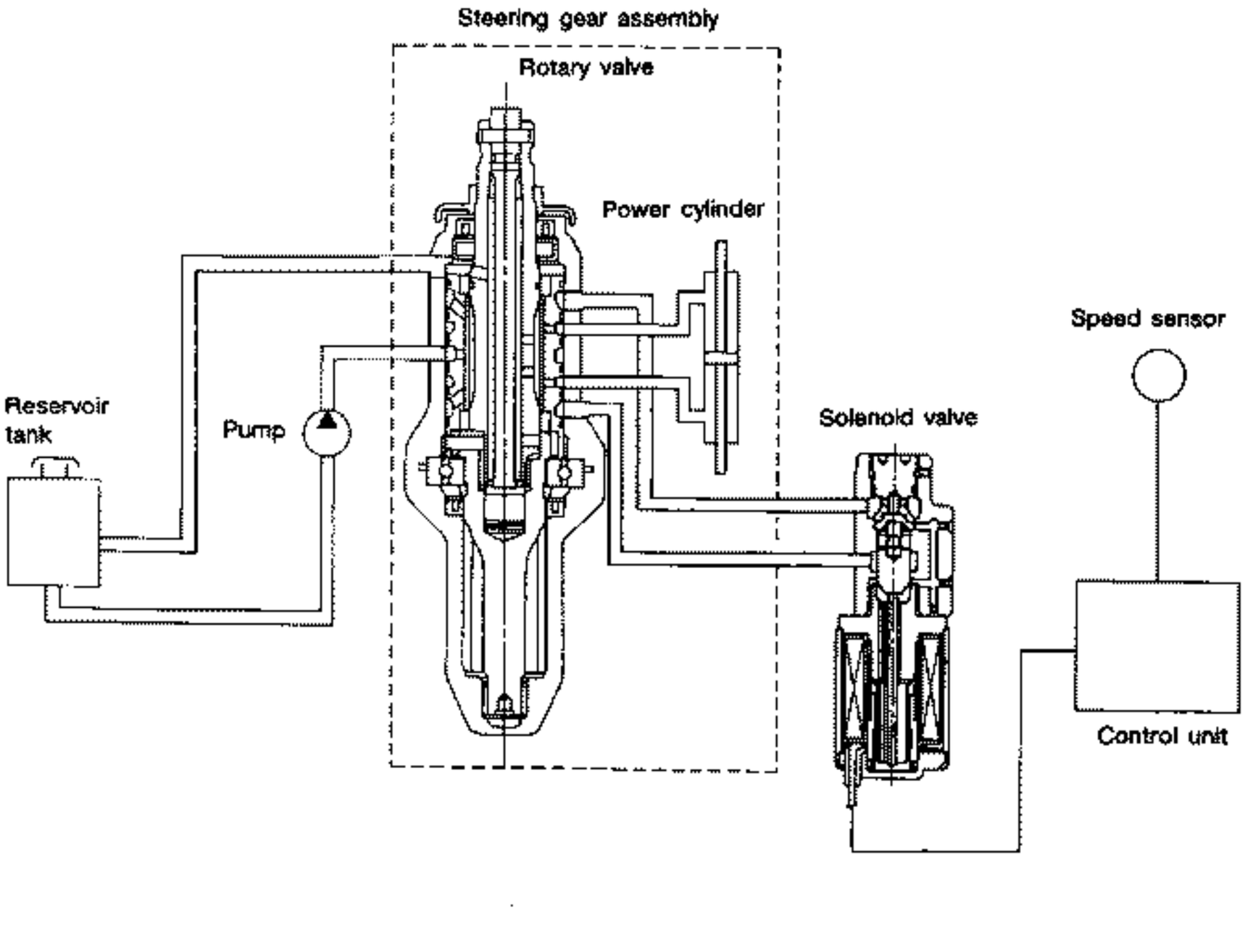

Schematic

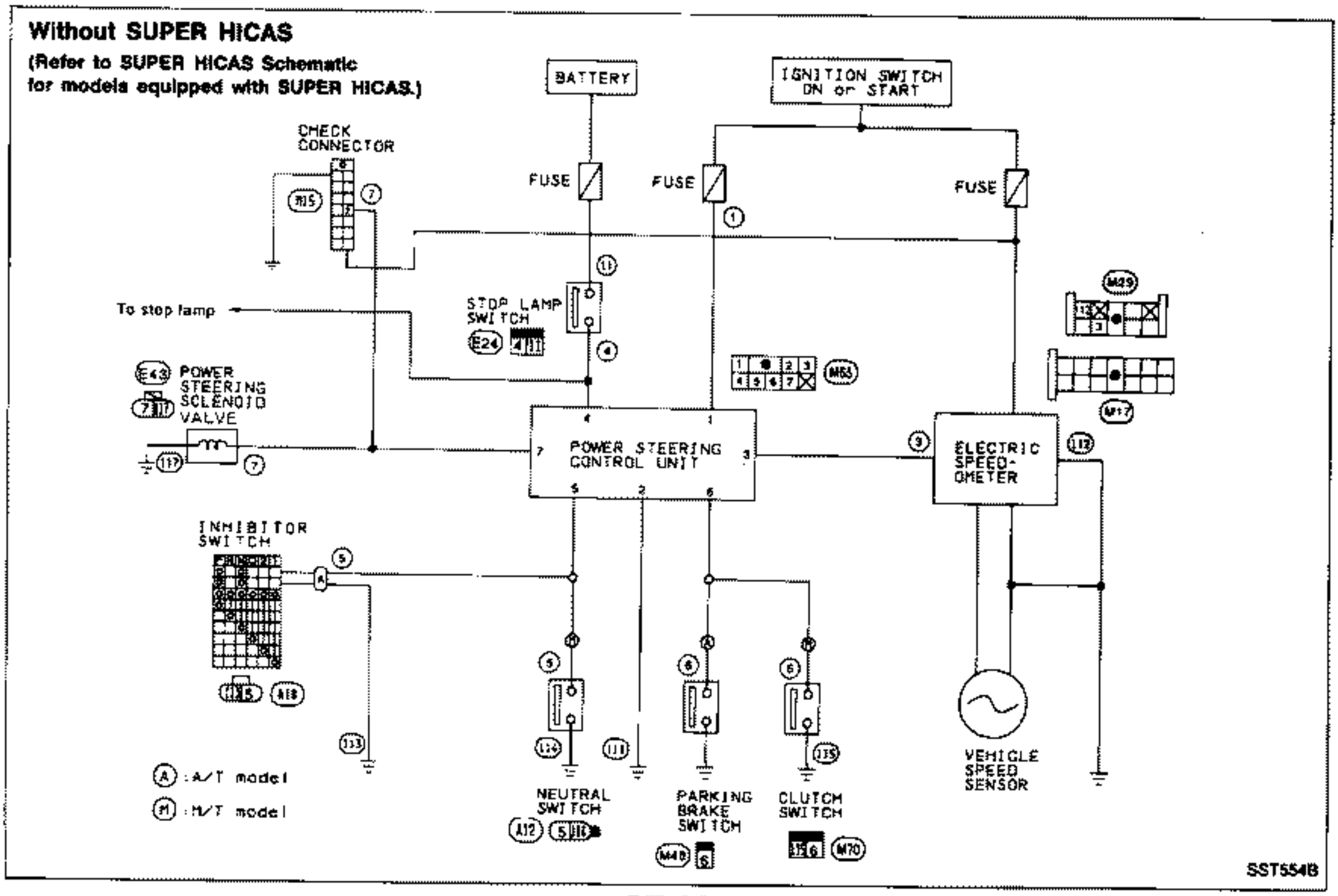

Wiring Diagram

Without SUPER HICAS

(Refer to SUPER HICAS Wiring diagram for models equipped with SUPER HICAS.)

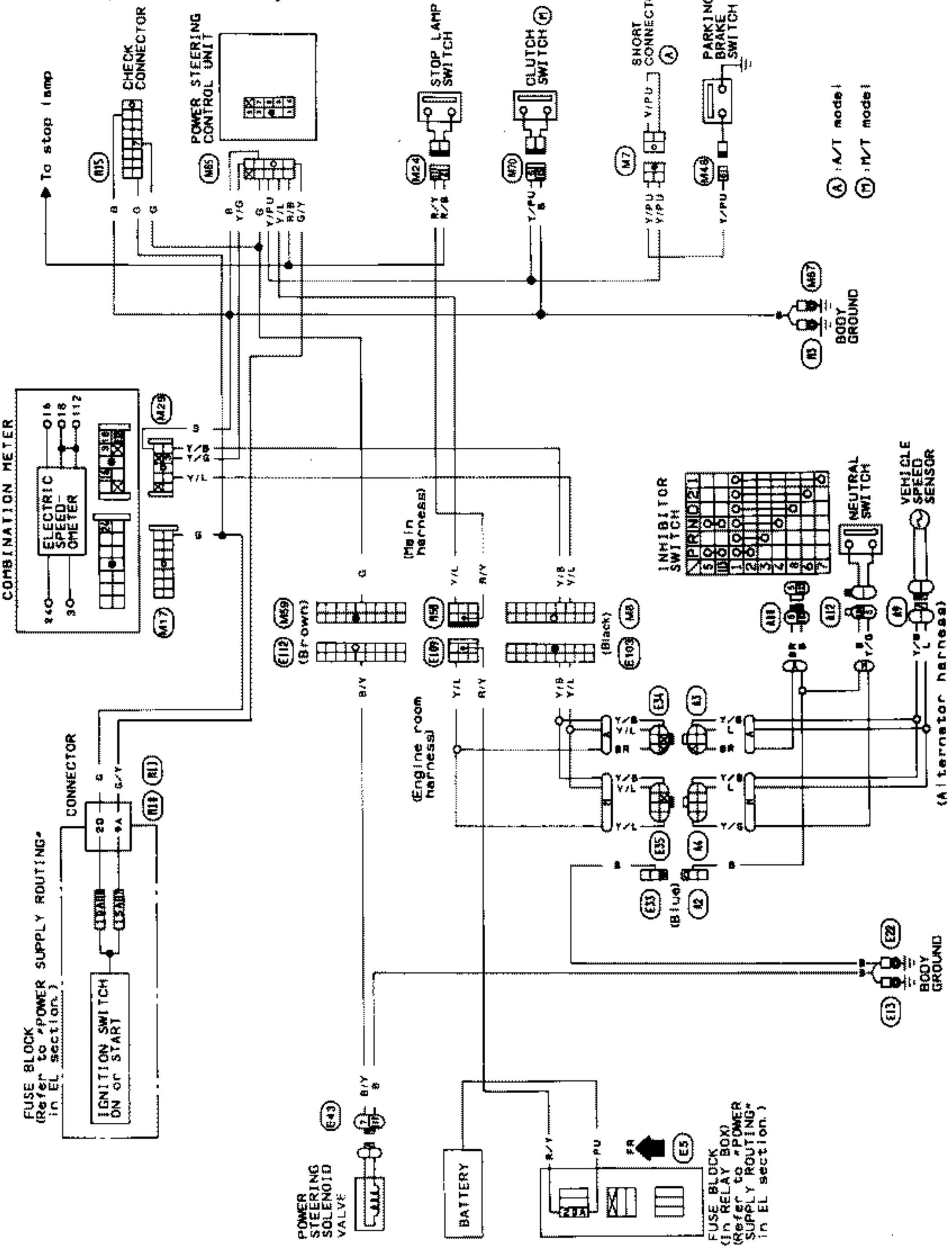

SST625B

Precautions

BEFORE DIAGNOSING THE POWER STEERING SYSTEM, ENSURE THAT:

Vehicle stopped

a. Power steering components (gears, oil pump, pipes, etc.) are free from leakage, and that oil level is correct.
b. Tires are inflated to specified pressure and are of specified size, and that steering wheel is a genuine Nissan part.
c. Wheel alignment is adjusted properly.
d. Suspension utilizes the original design, and is free of modifications which increase vehicle weight.

Vehicle in operation

a. Understand the trouble symptoms.
b. Engine is operating properly.

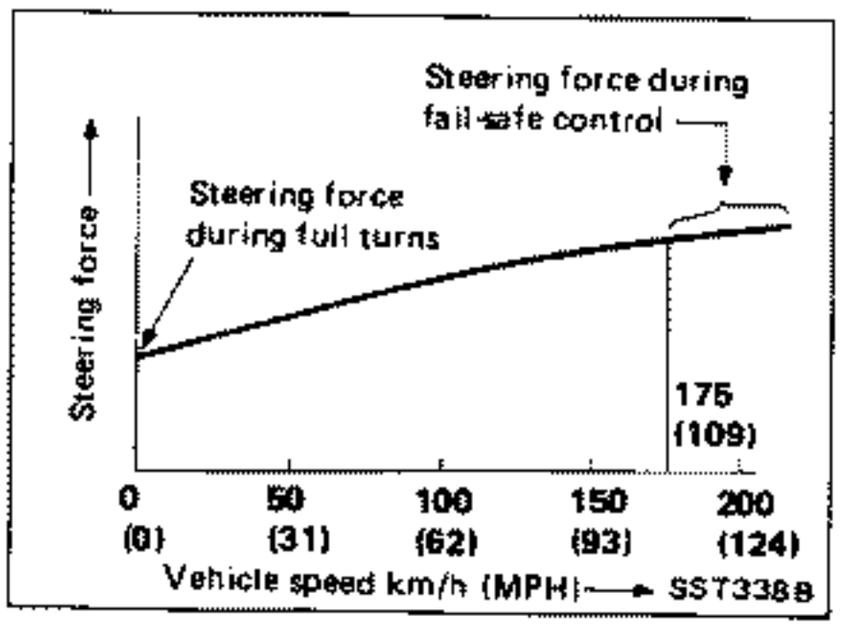

PRELIMINARY KNOWLEDGE HELPFUL IN CONDUCTING DIAGNOSES

The power steering system is a twin orifice type, which uses a vehicle-speed sensing, electronic control design. Valve sensitivity is controlled in response to vehicle speed to achieve optimum steering effort. When a vehicle-speed signal is not entered into the power steering control unit for approximately 10 seconds during normal operation (see NOTE below), a fail-safe system activates to maintain the steering effort at a level similar to that experienced during high-speed operation. More precisely, if a foot-brake signal, parking-brake signal and/or transmission position signal (N or P-range signal on automatic transmission models and a neutral or clutch signal on manual transmission models) are not entered, the power steering system is held in a "fail-safe" control state. When this happens, a symptom referred to as "heavy steering during stationary turns" sometimes occurs.

NOTE:
Normal operation refers to a driving condition in which the foot brake pedal and parking brake lever are released, the shift lever is in any position other than "P" or "N" (automatic transmission models), the shift lever set in any position except "N" (manual transmission models) and the clutch pedal is not depressed.

Diagnostic Procedure 1

SYMPTOM:

Heavy steering operation during stationary turns

START

1) CHECK STOP LAMP SIGNAL.
Turn ignition switch "ON" (with engine OFF), release foot brake pedal and parking brake lever. Set shift lever to any position except "P" and "N" on automatic transmission models or set shift lever to any position except "N" on manual transmission models, and ensure clutch pedal is released.

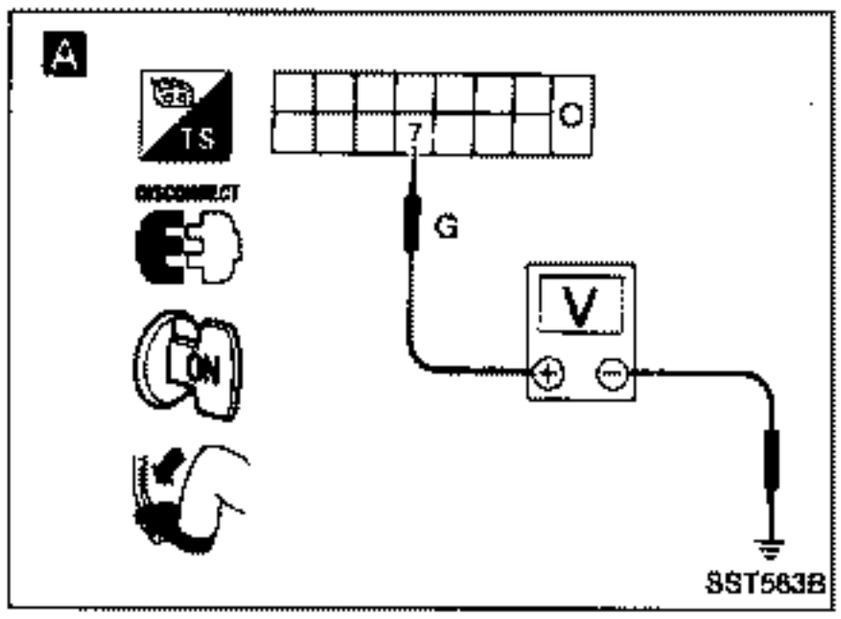

A

Depress brake pedal and measure voltage between solenoid valve terminals of "check" connector.

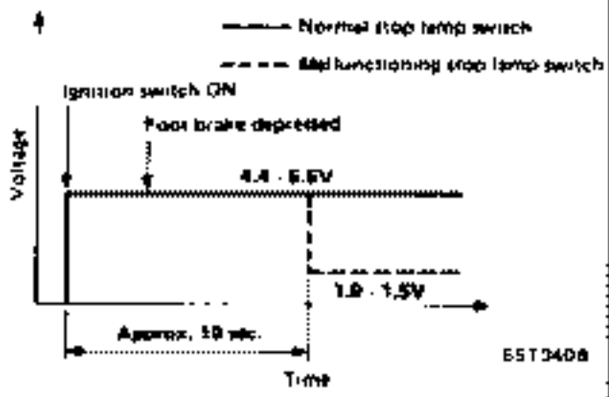

Voltage:

4.4 - 6.6 volts (constant) ... O.K.

Outside the above range or voltage fluctuations ... N.G.

O.K. → Go to 2).

N.G.

Check if terminal voltage drops to 1 - 1.5V range approx. 10 seconds after ignition switch is turned ON.

No change (outside 4.4 - 6.6V range) ... O.K.

Voltage drop ... N.G.

O.K. → Go to 5).

N.G.

Ⓐ

Diagnostic Procedure 1 (Cont'd)

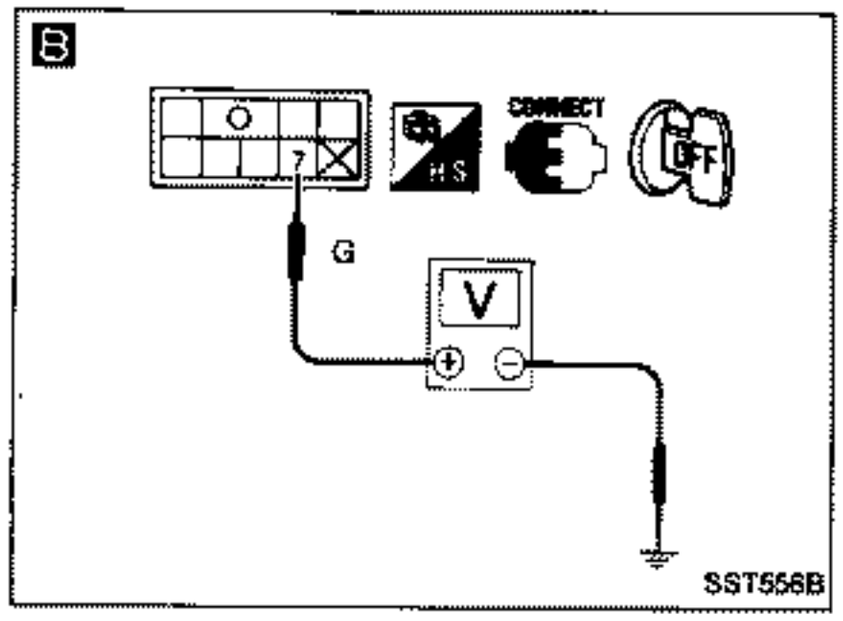

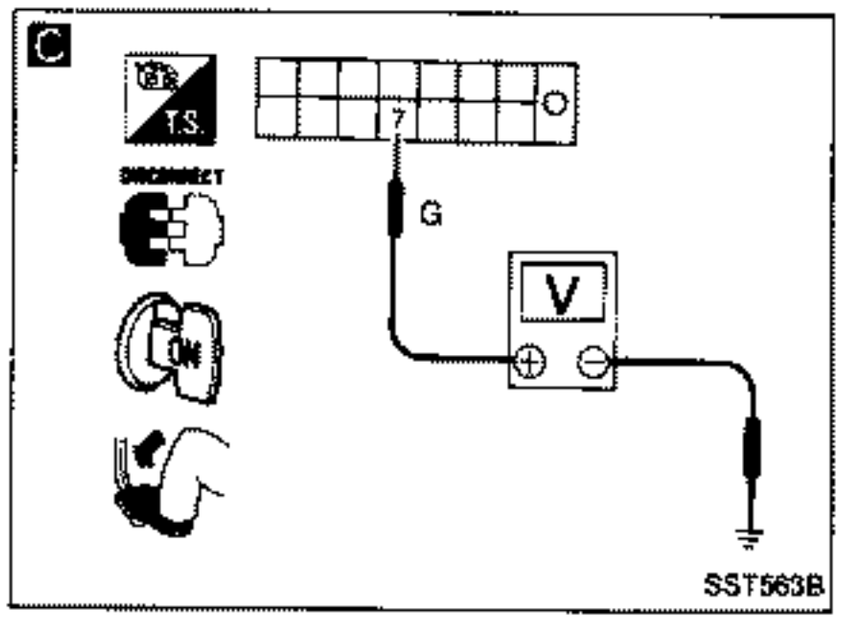

(A)

B

Check if stop lamp switch signal is present at power steering control unit.
YES (12 volts — Brake pedal depressed.) ... O.K.
NO (0 volts) ... N.G.

N.G. → Malfunctioning stop lamp switch system

O.K.

Ensure that power steering control unit connector is connected properly.

C

After ignition switch is turned "ON", depress brake pedal and measure voltage between solenoid valve terminals of "check" connector.
4.4 - 6.6 volts (constant) ... O.K.
Voltage fluctuations ... N.G.

N.G. → Malfunctioning power steering control unit.

O.K.

Check if heavy steering operation occurs during stationary turns.
YES ... N.G.
NO (Lighter steering operation) ... O.K.

N.G. → Go to 4).

O.K.

END

Diagnostic Procedure 1 (Cont'd)

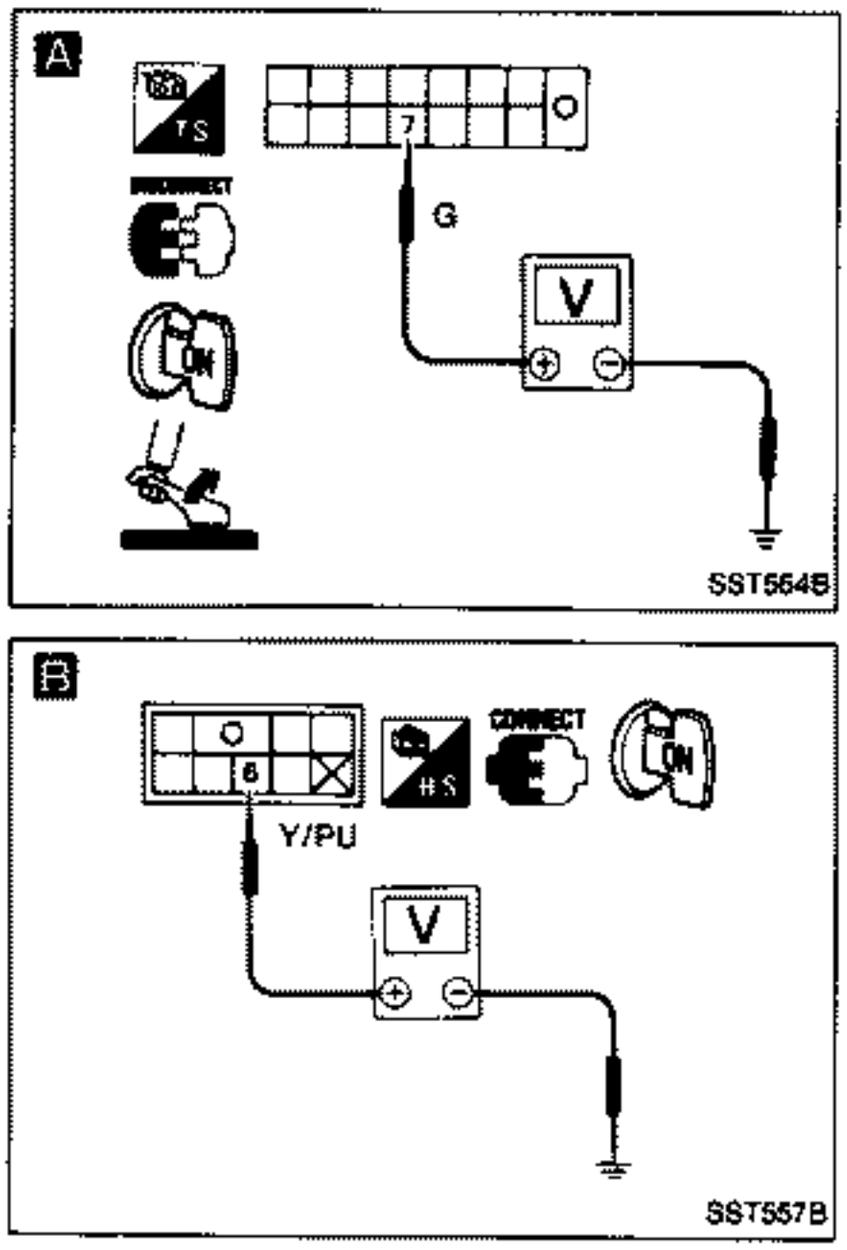

A

2) CHECK PARKING BRAKE SIGNAL.

Release foot brake pedal and apply parking brake lever.

Measure voltage between solenoid valve terminals of "check" connector.

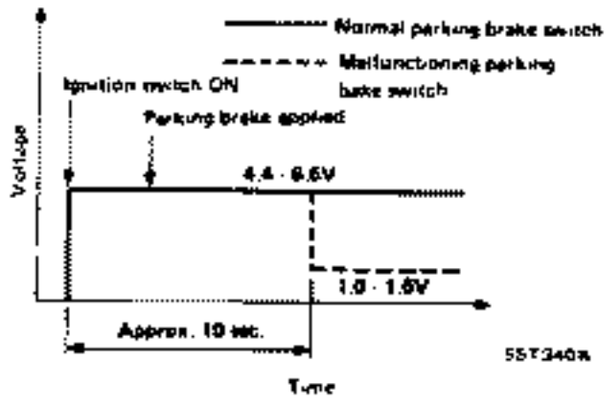

Voltage:

4.4 - 6.6V (constant)
... O.K.
Outside the above range or voltage fluctuations
... N.G.

O.K. → Go to 3).

N.G. ↓

Check if terminal voltage drops to 1.0 - 1.5V range approx. 10 seconds after ignition switch is turned ON.

No change (outside 4.4 - 6.6V range) ... O.K.
Voltage drop ... N.G.

O.K. → Go to 5).

N.G. ↓

B

Check if parking brake switch signal is present at power steering control unit.

YES (0 volts — Parking brake applied.)
NO (12 volts) ... N.G.

N.G. → Malfunctioning parking brake system

O.K. ↓

Ensure that power steering control unit connector is connected properly.

↓ Ⓑ

Diagnostic Procedure 1 (Cont'd)

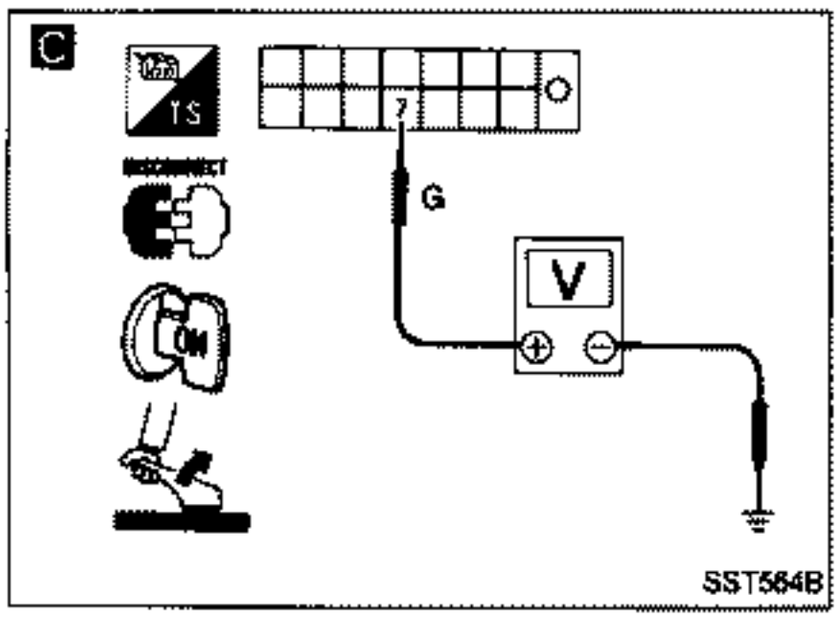

C

(B)

Turn ignition switch ON and apply parking brake lever.
Measure voltage between solenoid valve terminals of "check" connector.
Voltage:
4.4 - 6.6 volts (constant) ... O.K.
Voltage fluctuations ... N.G.

N.G. → Malfunctioning power steering control unit

O.K.

Check if heavy steering operation occurs during stationary turns.
YES ... N.G.
NO (lighter steering operation) ... O.K.

N.G. → Go to 4).

O.K.

END

Diagnostic Procedure 1 (Cont'd)

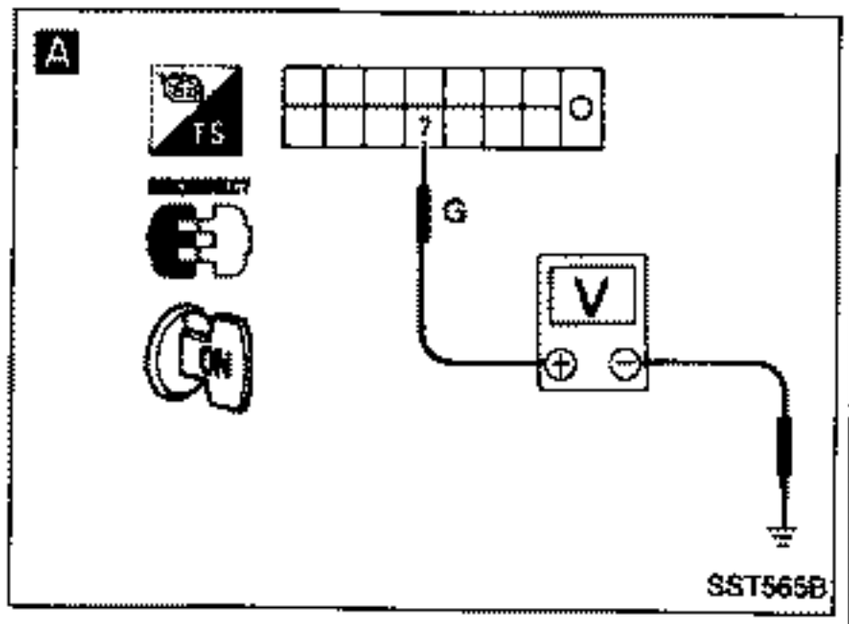

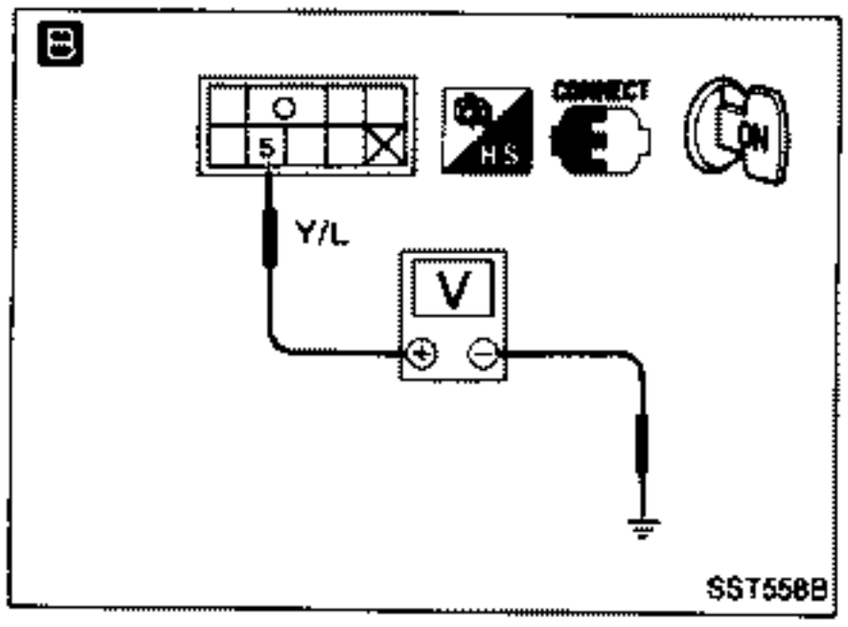

A

3) CHECK NEUTRAL POSITION SIGNAL.
Release parking brake lever.
Move shift lever to Neutral (A/T and M/T models). Measure voltage between solenoid valve terminals of "check" connector.

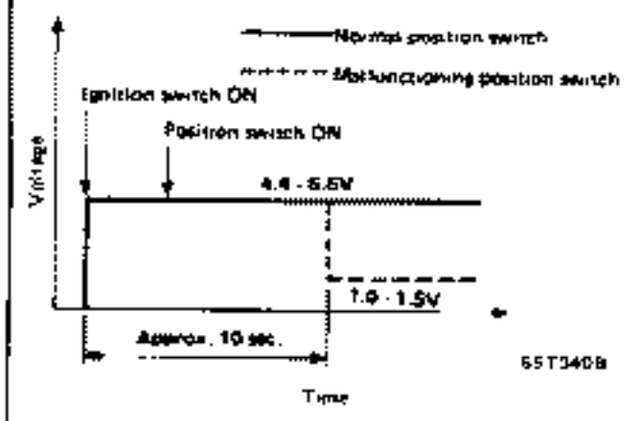

Voltage:
4.4 - 6.6V (constant) ... O.K.
Outside the 4.4 - 6.6V range or Voltage fluctuations ... N.G.

O.K. → Depress clutch pedal (M/T model) and move shift lever to "P" (A/T model).
Measure voltage between solenoid valve terminals at "check" connector.
Voltage:
4.4 - 6.6V (constant) ... O.K.
Outside the above range or voltage fluctuations ... N.G.

O.K. → Go to 4).

N.G. →

N.G. →

Check if terminal voltage drops to 1.0 - 1.5V range approx. 10 seconds after ignition switch is turned ON.
No change (outside 4.4 - 6.6V range) ... O.K.
Voltage drop ... N.G.

O.K. → Go to 5).

N.G. →

B

Check if position switch signal is present at power steering control unit.
YES (0 volts, when position switch is ON) ... O.K.
NO (4 - 5 volts) ... N.G.

N.G. → Malfunctioning position switch system

O.K. →

Ensure that power steering control unit connector is connected properly.

Diagnostic Procedure 1 (Cont'd)

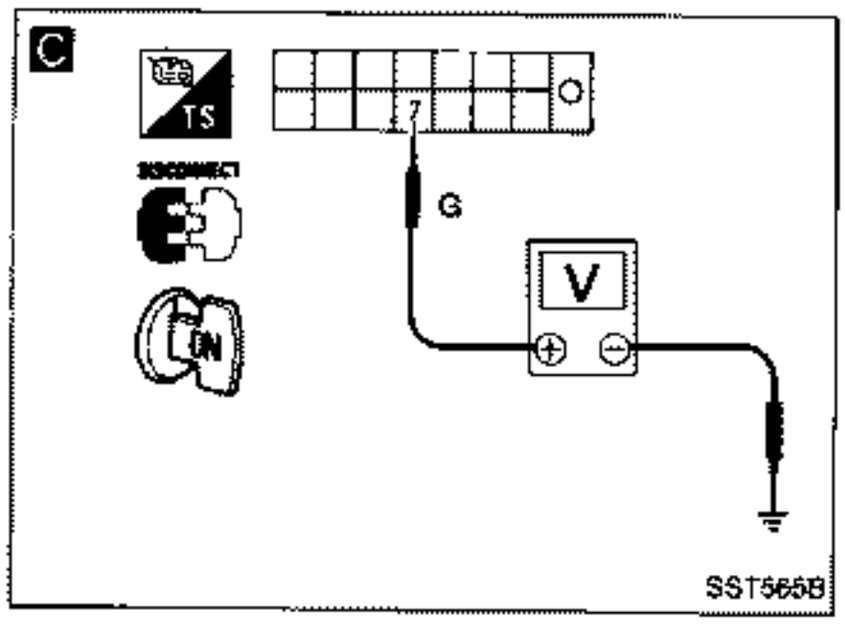

C

Turn ignition switch ON, depress clutch pedal (M/T model) and move shift lever to "P" (A/T model).
Measure voltage between solenoid valve terminals of "check" connector.
Voltage:
4.4 - 6.6V (constant) ... O.K.
Voltage fluctuations ... N.G.

N.G. → Malfunctioning power steering control unit

O.K. ↓

Check if heavy steering operation occurs during stationary turns.
YES ... N.G.
NO (Lighter steering operation) ... O.K.

N.G. → Go to 1).

O.K. ↓

END

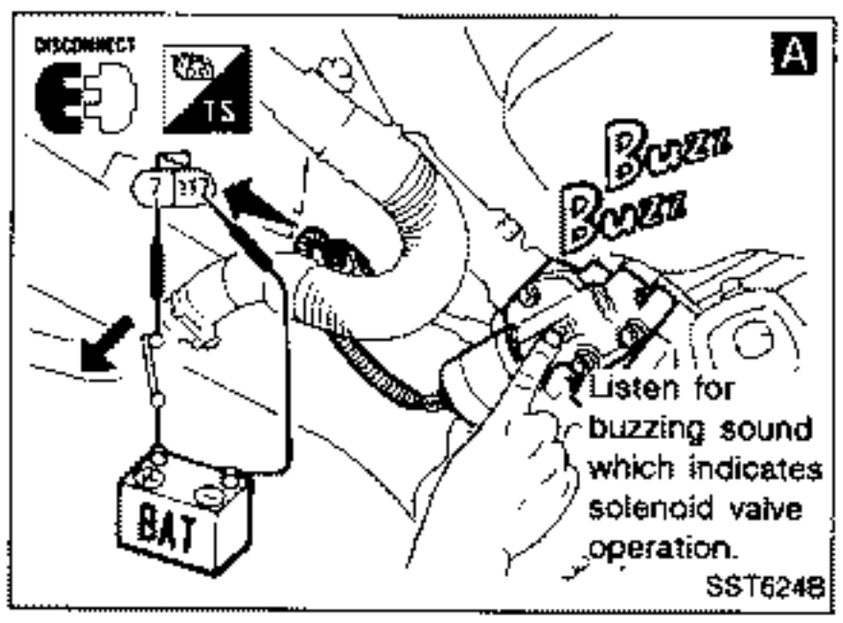

A

4) CHECK POWER STEERING SOLENOID VALVE FOR PROPER OPERATION.
Disconnect solenoid valve connector.
Apply voltage between connector terminals (on solenoid valve side) and touch solenoid valve to ensure that it vibrates.
(Vibration is felt after applied voltage is removed.)
Yes ... O.K.
No ... N.G.

N.G. → Malfunctioning power steering solenoid valve

O.K. ↓

- Adjusting steering gear assembly adjust screw
- Malfunctioning steering gear assembly
- Malfunctioning oil pump

Diagnostic Procedure 1 (Cont'd)

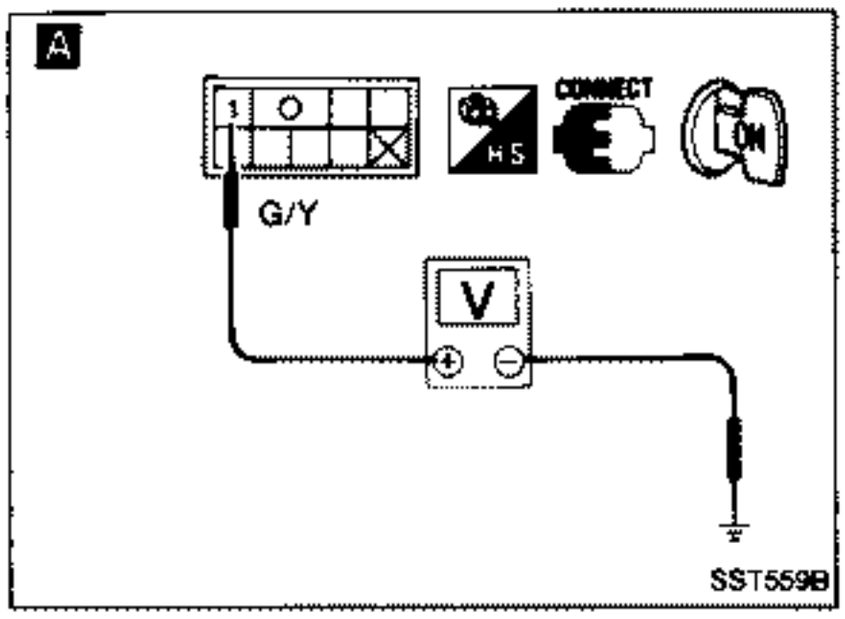

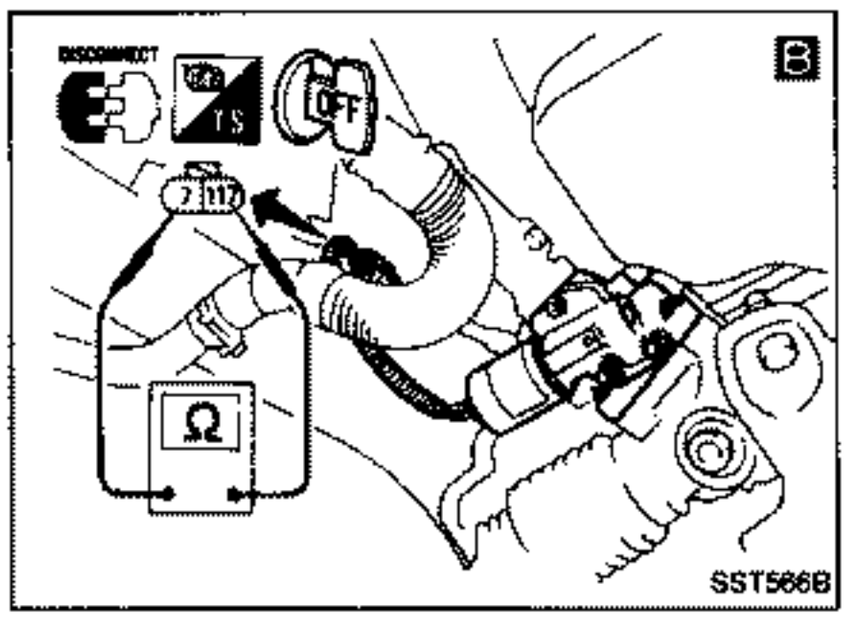

A

5) CHECK POWER STEERING CONTROL UNIT FOR PROPER OPERATION.
Check if power voltage is present at power steering control unit.
YES (12V) ... O.K.
NO (0V) ... N.G.

N.G. → Malfunctioning ignition power circuit

O.K. ↓

B

Measure solenoid valve resistance.
Disconnect solenoid valve connector, and measure resistance between connector terminals (on solenoid valve side.)
Resistance:
4 - 6 ohms ... O.K.
0 ohms or infinite ... N.G.

N.G. → Malfunctioning solenoid valve system

O.K. ↓

Ensure that power steering control unit connector is connected properly.

↓

Check if heavy steering operation occurs during stationary turns.
YES ... N.G.
NO (Lighter steering operation) ... O.K.

N.G. → Malfunctioning power steering control unit

O.K. ↓

END

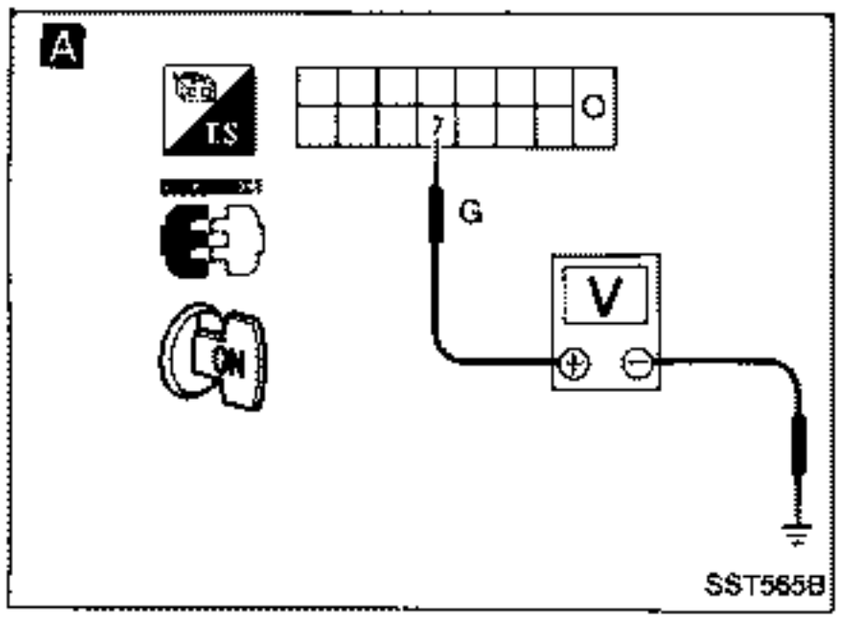

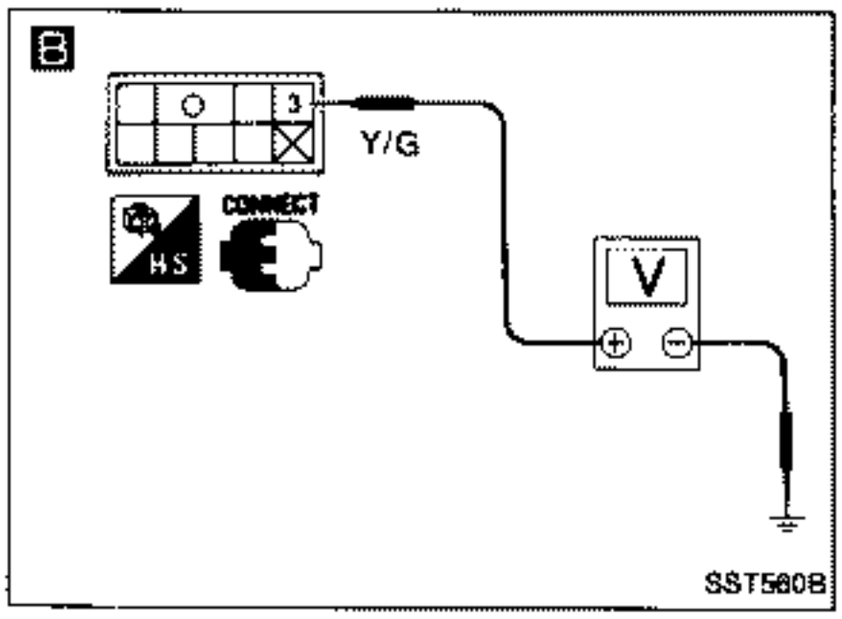

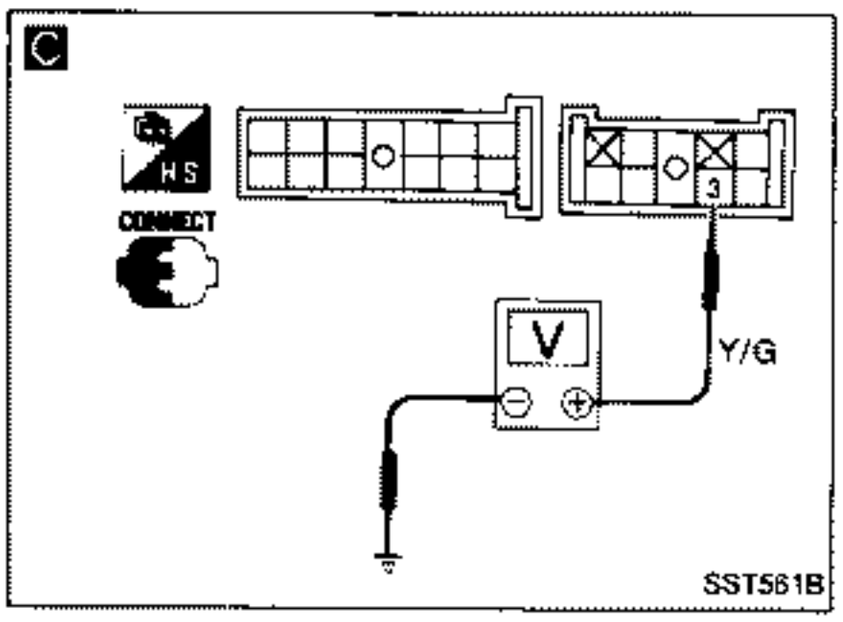

Diagnostic Procedure 2

SYMPTOM:
Light steering operation during high-speed driving

Raise rear wheels off ground and start engine.

↓

A

Measure voltage between solenoid valve terminals of "check" connector while driving vehicle from 0 to 100 km/h (0 to 62 MPH).
Voltage:
0 km/h (0 MPH):
4.4 - 6.6V ... O.K.
100 km/h (62 MPH):
1.8 - 2.8V ... O.K.
Constant voltage ... N.G.

O.K. → Ⓒ

↓ N.G.

Check speedometer for proper operation.
YES ... O.K.
NO ... N.G.

N.G. → Malfunctioning vehicle speed sensor or speedometer

↓ O.K.

Check A.S.C.D. and vehicle speed-sensing door lock for proper operation.
YES ... O.K.
NO ... N.G.

N.G. → C

C

Check if vehicle speed signal is present at speedometer.
Disconnect speedometer from vehicle to facilitate work. Reconnect wiring. Measure voltage between speedometer terminals while driving vehicle at very slow speeds.
1 volt (Min.) and 5 volts (Max.) are alternately repeated ... O.K.
No voltage is present ... N.G.

O.K. → Malfunctioning speedometer

N.G. → Improper connection between speedometer and power steering control unit

↓ O.K.

B

Check if vehicle speed signal is present at power steering control unit.
While driving at very slow speeds, connect power steering unit connector. Measure terminal voltage.
1 volt (Min.) and 5 volts (Max.) are alternately repeated ... O.K.
No voltage is present ... N.G.

N.G. → (joins Improper connection)

↓ O.K.

Ensure that power steering control unit connector is connected properly.

↓

Ⓐ

Diagnostic Procedure 2 (Cont'd)

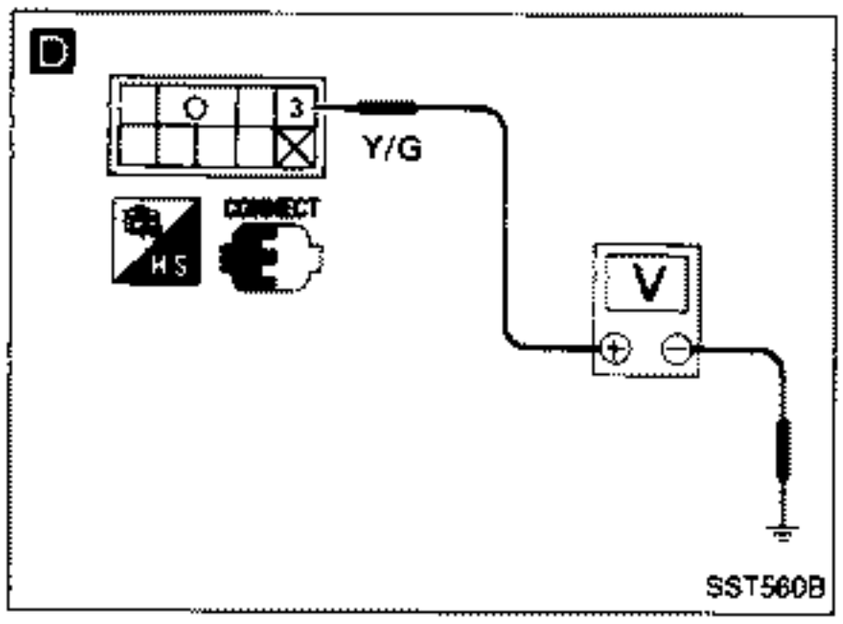

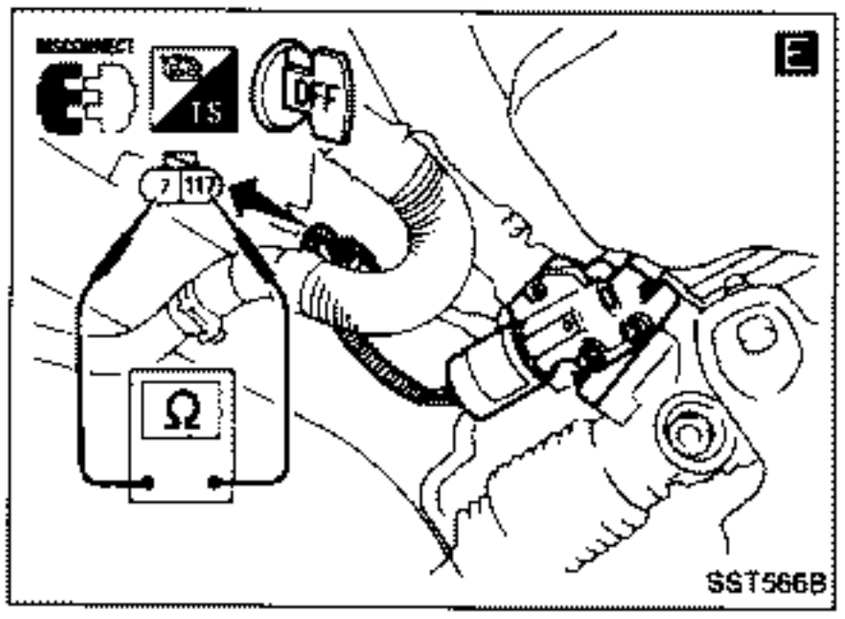

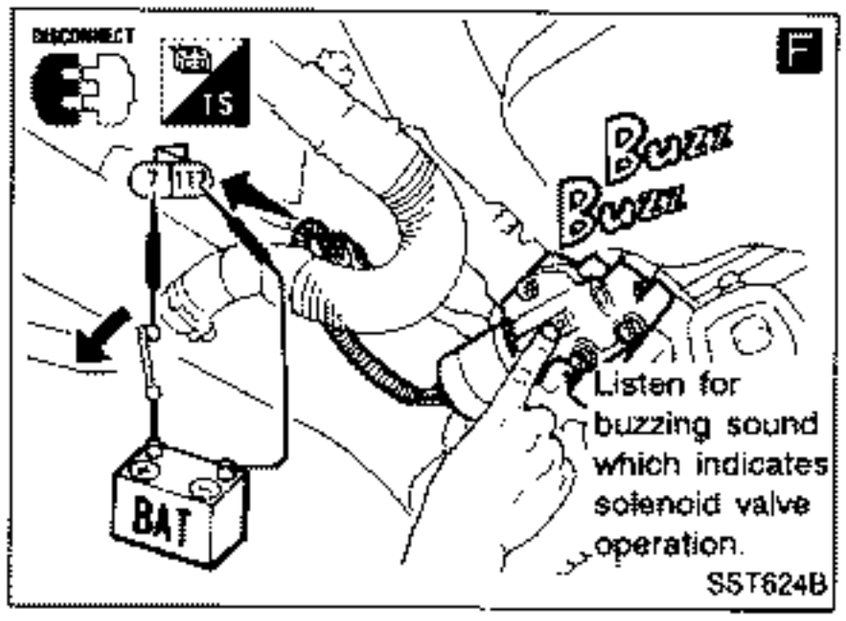

D

Measure voltage between solenoid valve connector terminals of "check" connector while driving vehicle from 0 to 100 km/h (0 to 62 MPH).

Voltage:

0 km/h (0 MPH):

4.4 - 6.6V ... O.K.

100 km/h (62 MPH):

1.8 - 2.8V ... O.K.

No voltage variations ... N.G.

O.K. → Check if steering operation is heavy during high-speed driving.

YES ... O.K.

NO ... N.G.

N.G. → O.K. → END

N.G. → E

E

Measure solenoid valve resistance.

Disconnect solenoid valve connector, and measure resistance between connector terminals (on solenoid valve side).

Resistance:

4 - 6 ohms ... O.K.

0 ohms or infinite ... N.G.

O.K. → Malfunctioning power steering control unit

N.G. → F

F

Disconnect solenoid valve connector.

Apply voltage between connector terminals (on solenoid valve side) and touch solenoid valve to ensure that it vibrates. (Vibration is felt after applied voltage is removed.)

Yes ... O.K.

No ... N.G.

N.G. → Malfunctioning solenoid valve

O.K. → ⓒ

ⓒ

- Adjusting steering gear assembly adjust screw
- Malfunctioning steering gear assembly
- Malfunctioning oil pump

Control Unit Inspection Table

The standard values (voltage), measured with an analog tester in contact with the control unit terminal, are shown below:

Terminal No.	Application	Standard value
1	Power	Approx. 12V
2	Ground	0V
3	Vehicle speed sensor input	1 volt (min.) and 5 volts (max.) are alternately repeated when vehicle is driven at very slow speeds.
4	Stop lamp switch input	Pressed: Approx. 12V Released: 0V
5	Neutral switch input	0V (clutch engaged and shift lever in "N") ... M/T models 0V (selector lever in "N" or "P") ... A/T models 4 - 5V (except for the above)
6	Parking brake switch input	Applied: 0V Released: Approx. 12V
7	Power steering solenoid valve output	0 km/h 4.4 - 6.6V 100 km/h 1.8 - 2.8V Fail-safe 1.0 - 1.5V

Performance of Controller

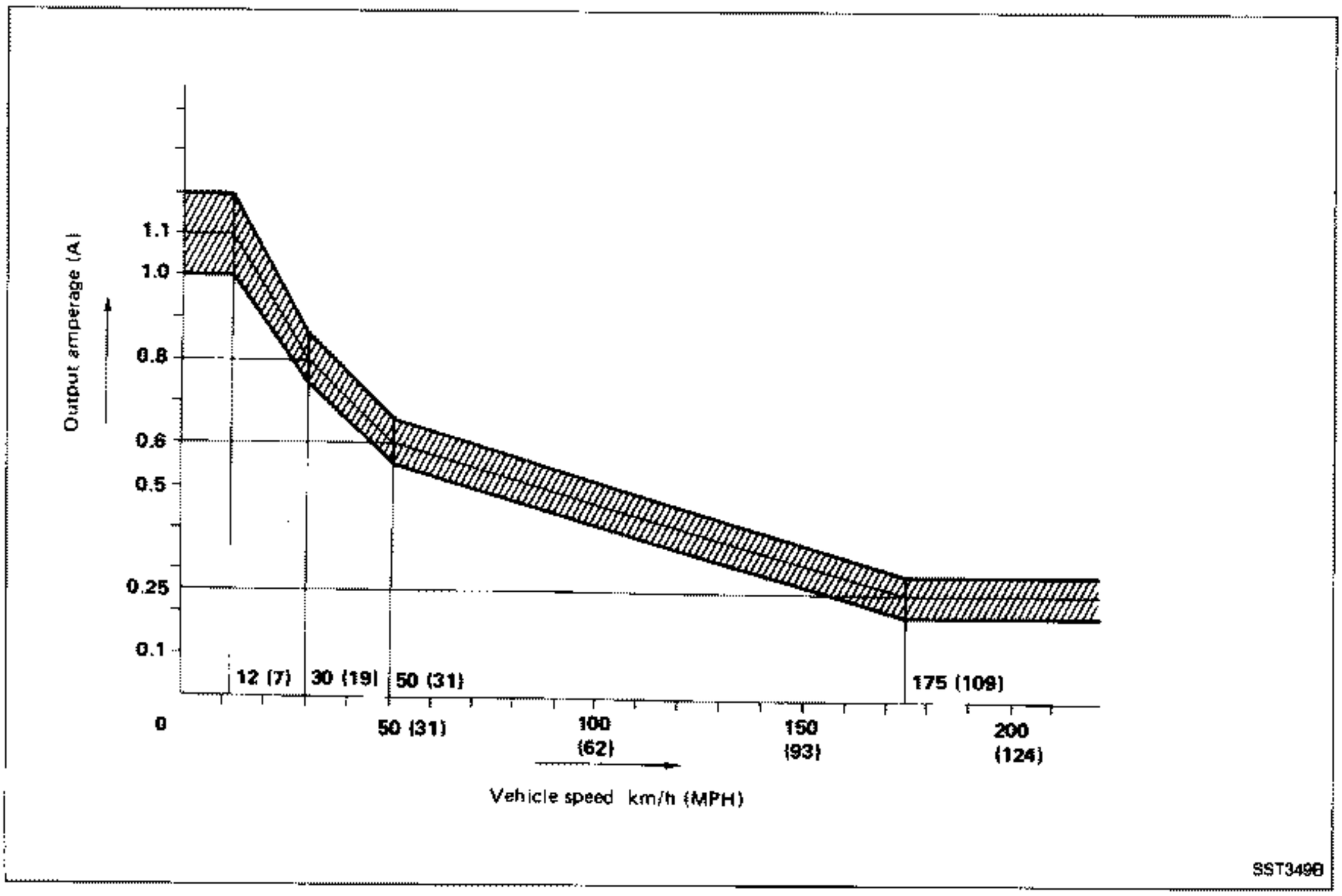

Diagnostic Procedure 1

SYMPTOM:

Heavy steering operation during stationary turns or light steering operation during high-speed driving.

START

A

Check in self-diagnosis mode.
Refer to page ST-70.

O.K. ←

N.G. ↓

Repair malfunctioning part detected by self-diagnosis.
Refer to "SUPER HICAS SYSTEM" — Trouble Diagnoses, Diagnostic Procedures 5 to 12.

Check for heavy steering operation during stationary turns or light steering operation during high-speed driving
YES ... N.G.
NO (Lighter steering operation; Stationary turns, Heavier steering operation; High-speed driving.)
... O.K.

N.G. ←

O.K. ↓

END

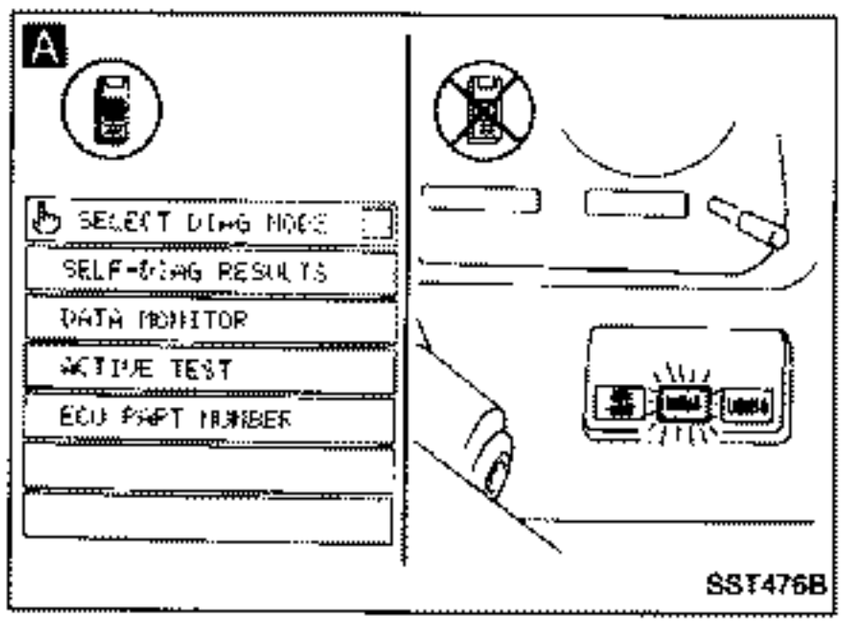

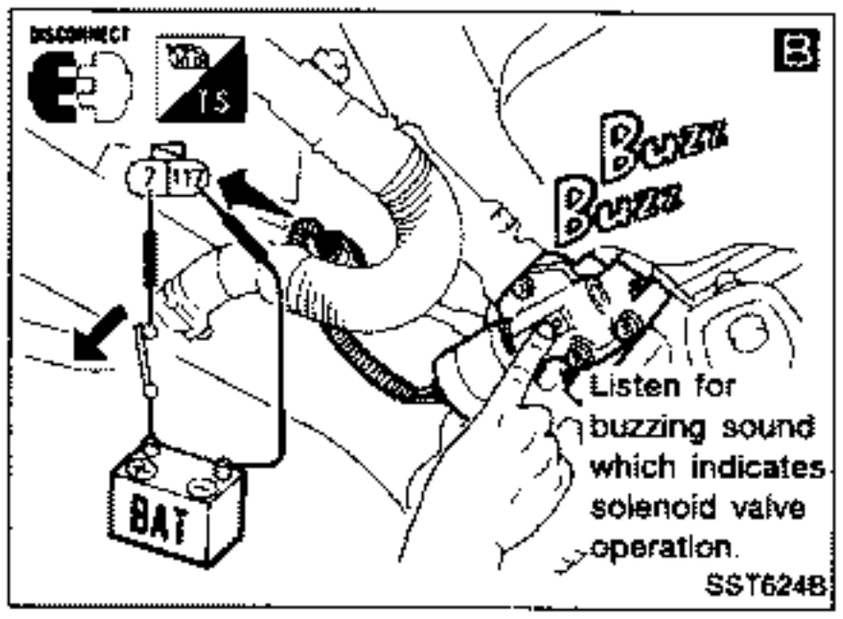

B

CHECK POWER STEERING SOLENOID VALVE FOR PROPER OPERATION.
Disconnect solenoid valve connector.
Apply voltage between connector terminals (on solenoid valve side) and touch solenoid valve to ensure that it vibrates.
(Vibration is felt after applied voltage is removed.)
Yes ... O.K.
No ... N.G.

N.G. → Malfunctioning power steering solenoid valve

O.K. ↓

- Adjusting steering gear assembly adjust screw
- Malfunctioning steering gear assembly
- Malfunctioning oil pump

HICAS Component Parts Location

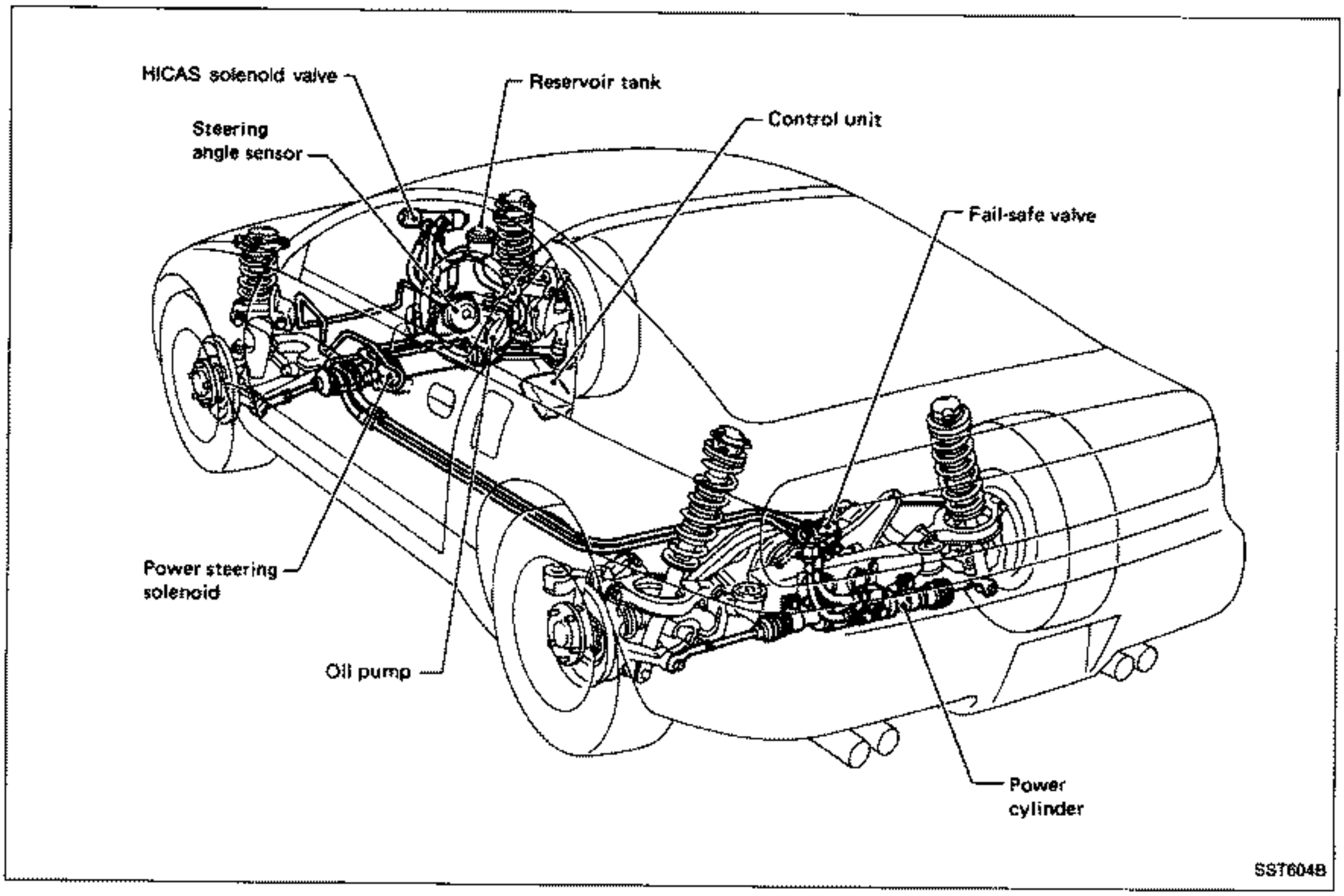

System Diagram

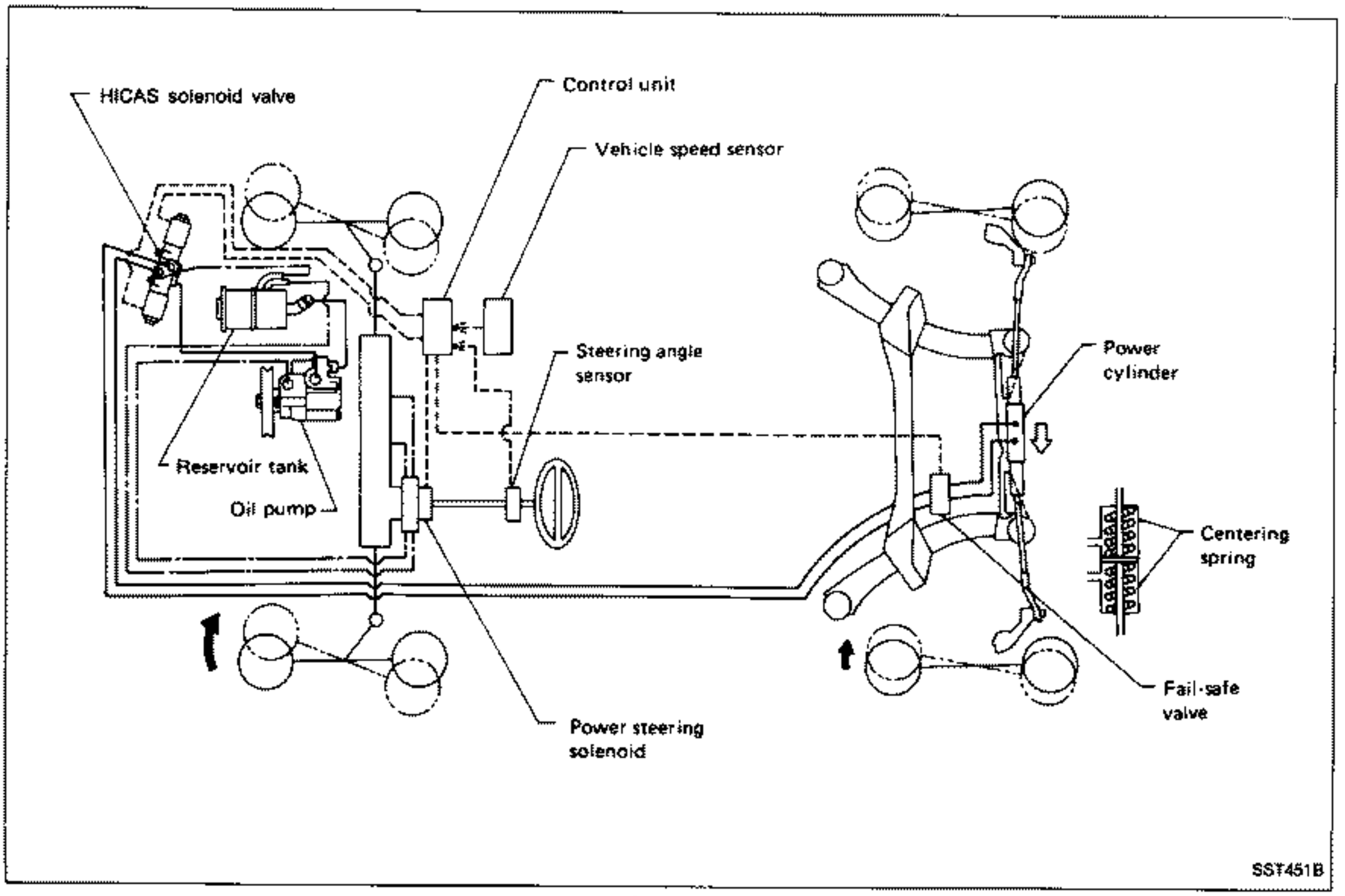

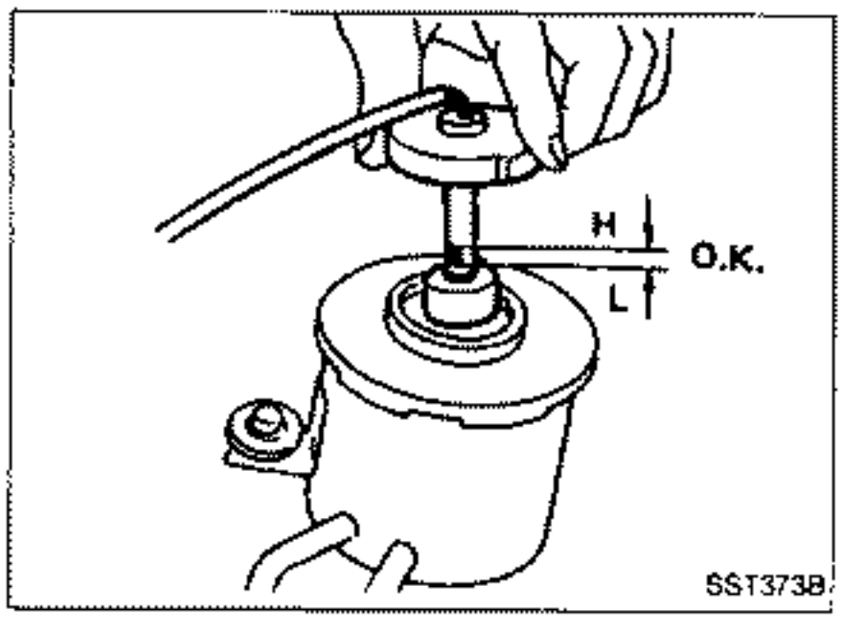

Checking Fluid Level

Maintain the fluid level so that the lower surface of the float is maintained between the "L" and "H" marks on the gauge rod. The fluid level should be checked when the engine is stopped and the fluid temperature is normal.

CAUTION:

- **Do not overfill.**
- **Recommended fluid is Automatic Transmission Fluid "Dexron™" type.**

Checking Fluid Leakage

Check lines for proper attachment, leaks, cracks, damage, loose connections, chafing and deterioration.
Fluid leakage should be checked for when the oil temperature is normal with the engine idling.

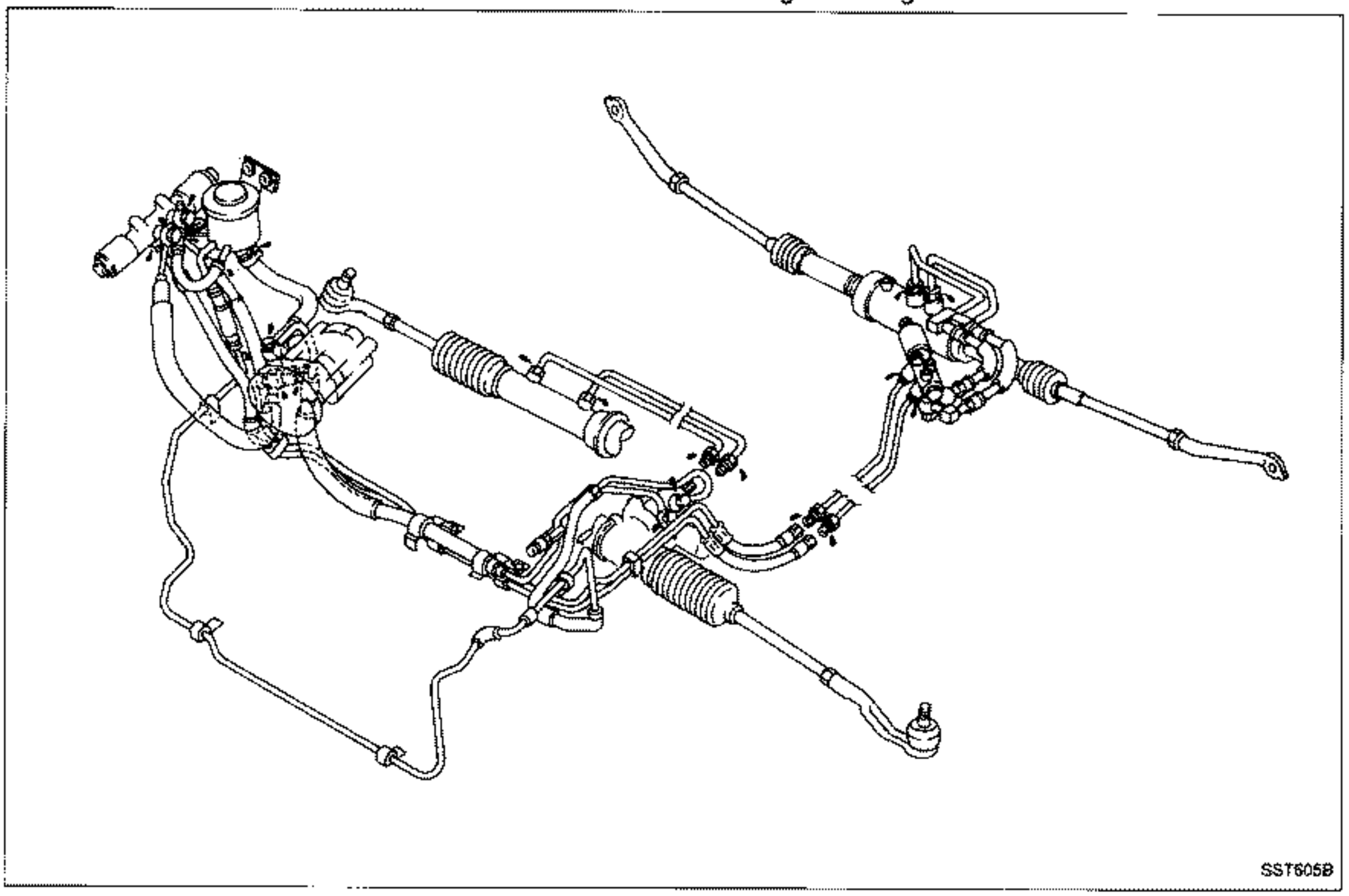

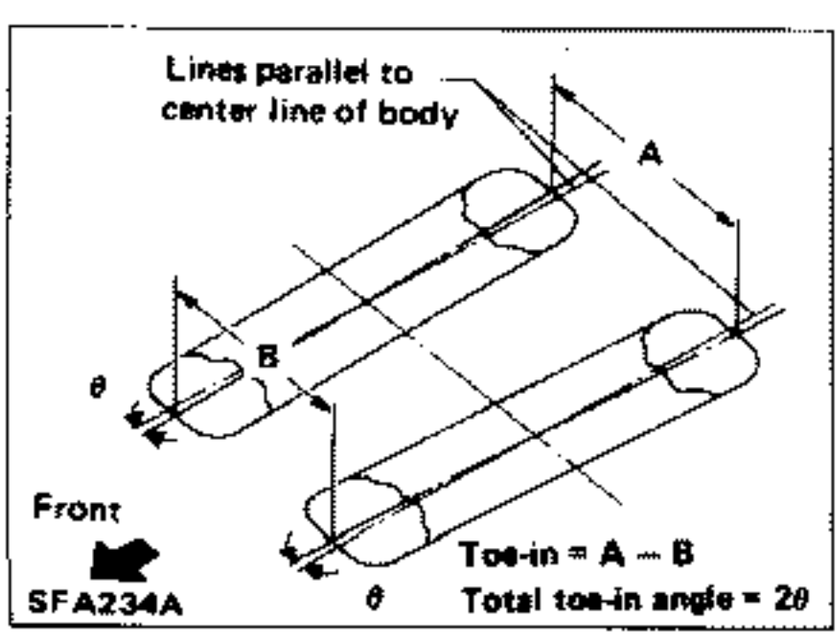

Measuring Rear Toe-in

Measure distance "A" and "B" at the same height as hub center.

Total toe-in:

A — B: 0 - 4 mm (0 - 0.16 in)

2θ: 0' - 22'

Refer to "SUPER HICAS" in section RA.

Inspection of HICAS System Operation

CAUTION:
Ensure that shift lever is set to "P" (A/T model) or "Neutral" (M/T model) before checking HICAS system operation.

When CONSULT is used:

1. Have a helper sit in the driver's compartment and raise vehicle.
   (Use a two-pole lift or a center pole lift so that the four wheels are free to rotate.)
2. Connect CONSULT unit to diagnosis connector and start engine.
3. Touch "START" on CONSULT display.
4. Touch "HICAS", "ACTIVE TEST" and "SIMULATED DRIVE" in that order.

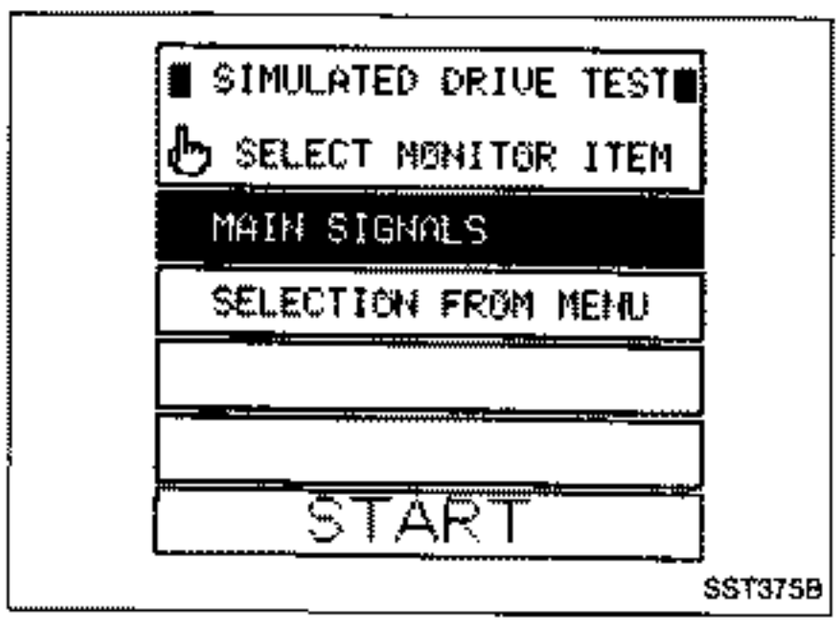

5. Touch "START" when MAIN SIGNALS display is reversed.

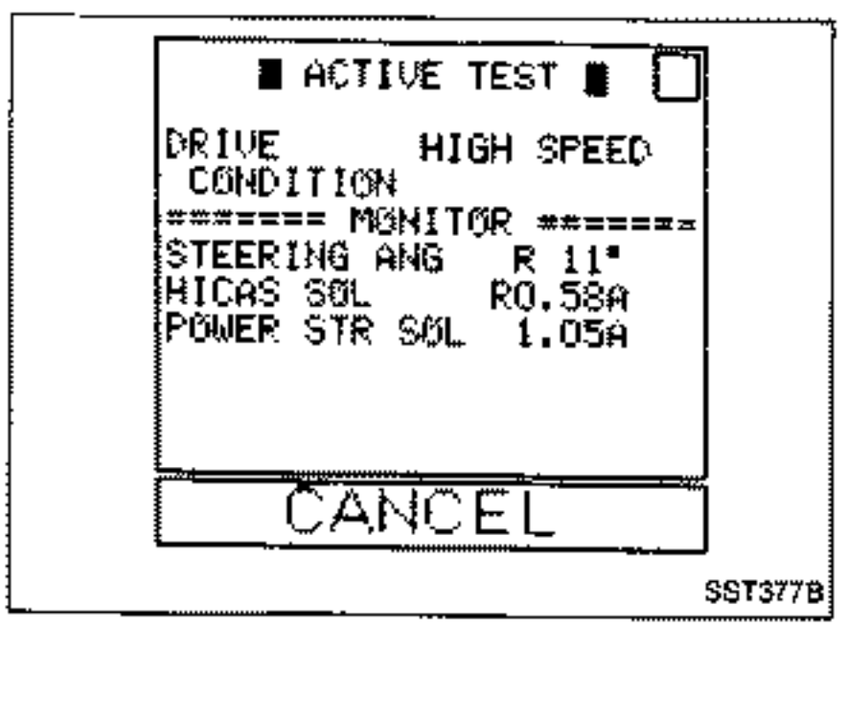

6. Touch "START."

After simulated drive condition has continued for 5 minutes, it will automatically cancel and CONSULT unit will then show "TEST IS INTERRUPTED TO AVOID OIL TEMP. RISE" display. To cancel this mode during self-diagnosis, simply touch "CANCEL".

Inspection of HICAS System Operation (Cont'd)

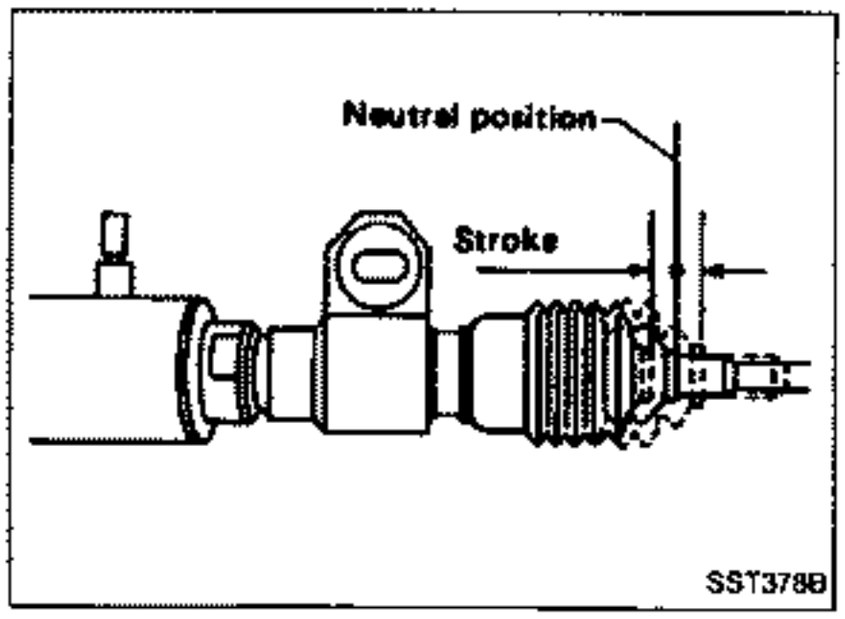

7. Operate engine at speeds greater than 2,000 rpm, and turn steering wheel 180° in one direction from the neutral position. Measure extension value of one power cylinder rod and retraction value of the other. Then, turn steering wheel 180° in the other direction from the neutral position, and measure extension value of one cylinder rod and retraction value of the other. Determine strokes of respective power cylinders by adding (measured) extension and retraction values.

Measure rod strokes in as short a period of time as possible.

Standard stroke:

When turned to the right
2.6 mm (0.102 in)
When turned to the left
2.6 mm (0.102 in)
Total stroke
5.2 mm (0.205 in)

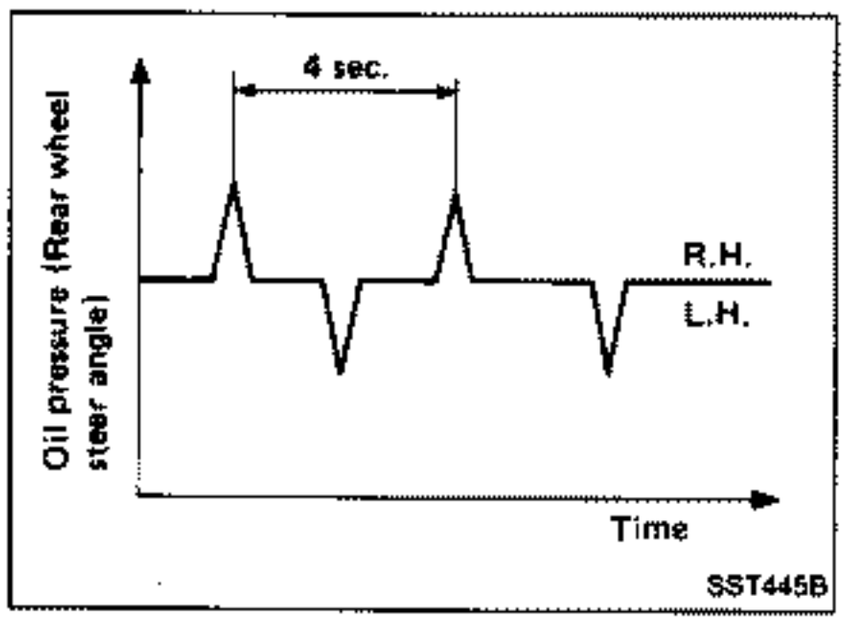

When CONSULT is not used:

1. Have a helper sit in the driver's compartment and raise vehicle.
   (Use a 2-pole lift or a center pole lift so that the four wheels are free to rotate.)
2. Set HICAS system in self-diagnosis mode.
(1) Turn ignition switch "OFF".
(2) Set shift lever to "P" or "N" position (A/T model), or "Neutral" position (M/T model).
(3) Turn ignition switch "ON".
(4) Immediately start engine.
(5) Turn steering wheel from left to right (at least 20° from the neutral position) 5 times or more, then depress foot brake pedal at least 5 times all within 10 seconds after ignition switch has been turned "ON".
3. Set steering wheel to a point approximately 10° from the neutral position and check to ensure that rear wheels turn to the left and right alternately.

Inspection of HICAS System Operation (Cont'd)

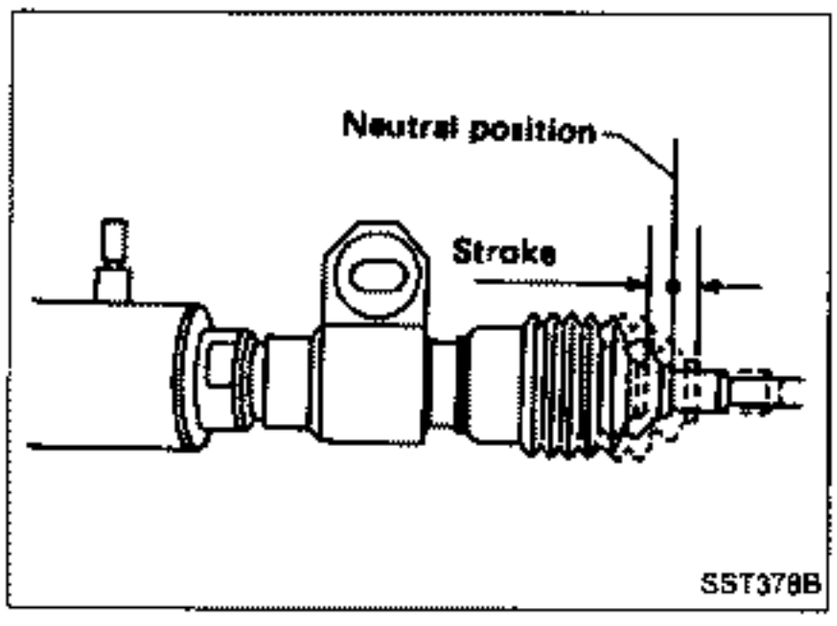

4. Operate engine at speeds greater than 2,000 rpm, and turn steering wheel 180° in one direction from the neutral position. Measure extension value of one power cylinder rod and retraction value of the other. Then, turn steering wheel 180° in the other direction from the neutral position, and measure extension value of one cylinder rod and retraction value of the other. Determine strokes of respective power cylinder rods by adding (measured) extension and retraction values.

Measure rod strokes in as short a period of time as possible.

Standard stroke:

When turned to the right

2.6 mm (0.102 in)

When turned to the left

2.6 mm (0.102 in)

Total stroke

5.2 mm (0.205 in)

Do not depress foot brake pedal during operation check, otherwise the operation will be stopped.

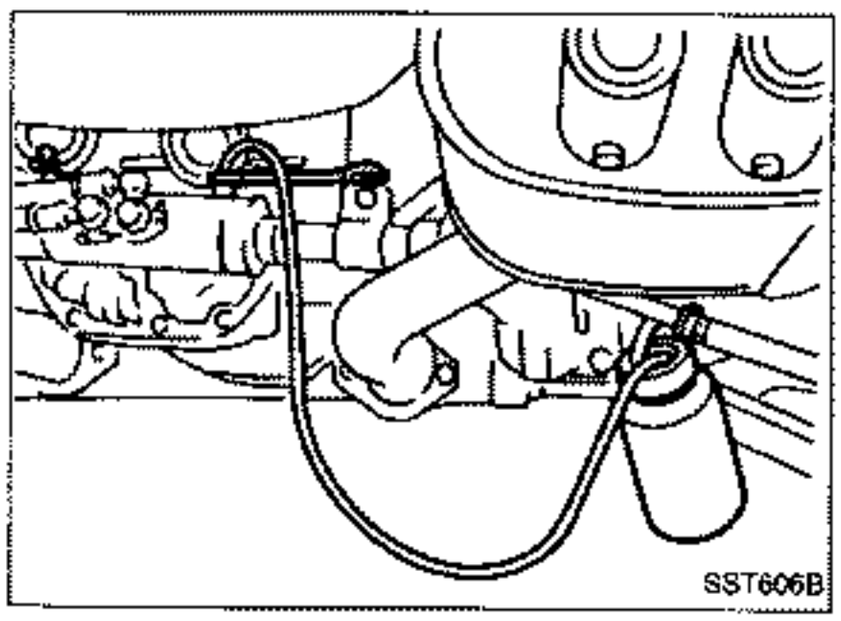

Bleeding Hydraulic System

Before bleeding air from the HICAS system, be sure to bleed air from the power steering system.

Refer to "SUPER HICAS SYSTEM — Repair of Component Parts".

Power Cylinder

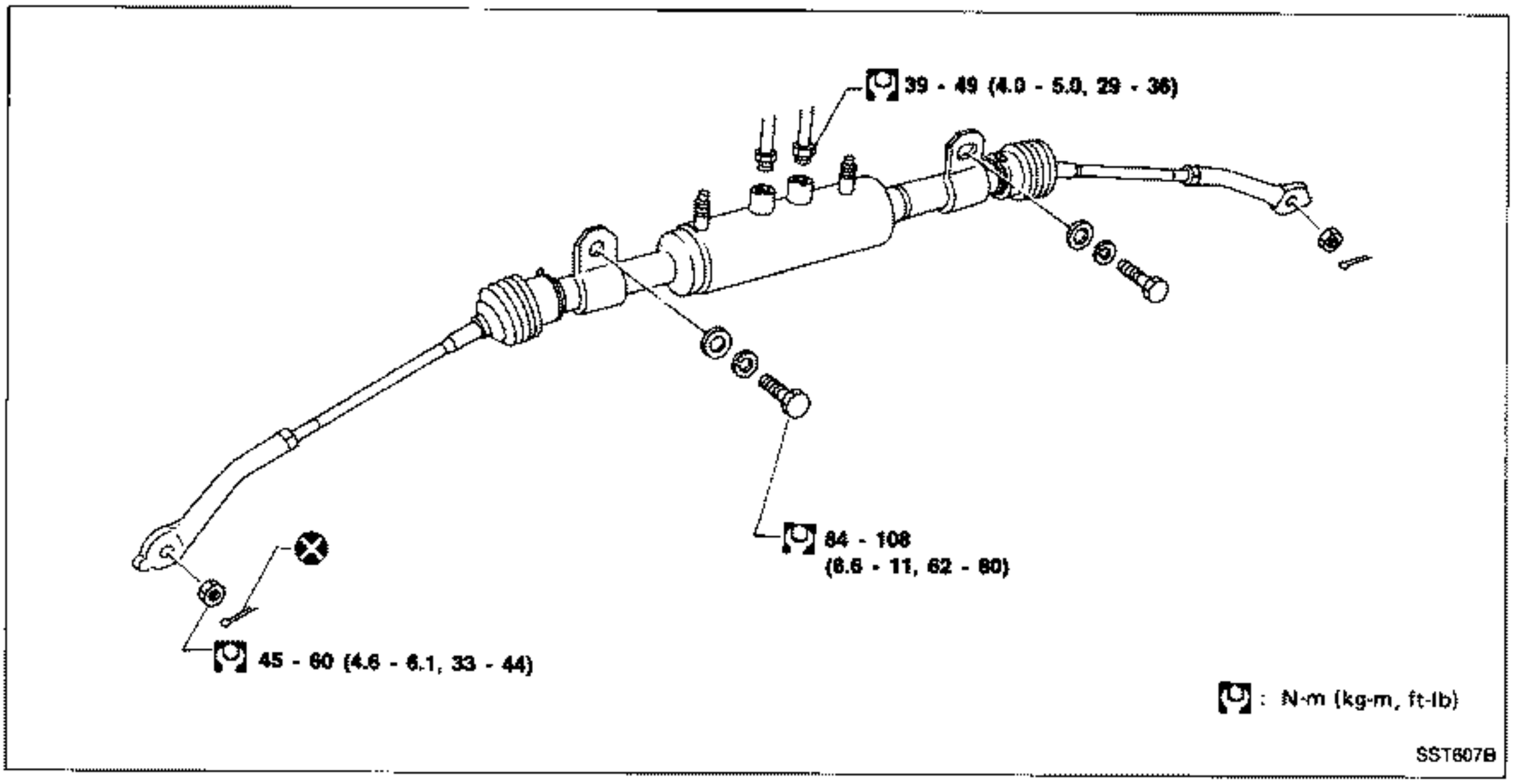

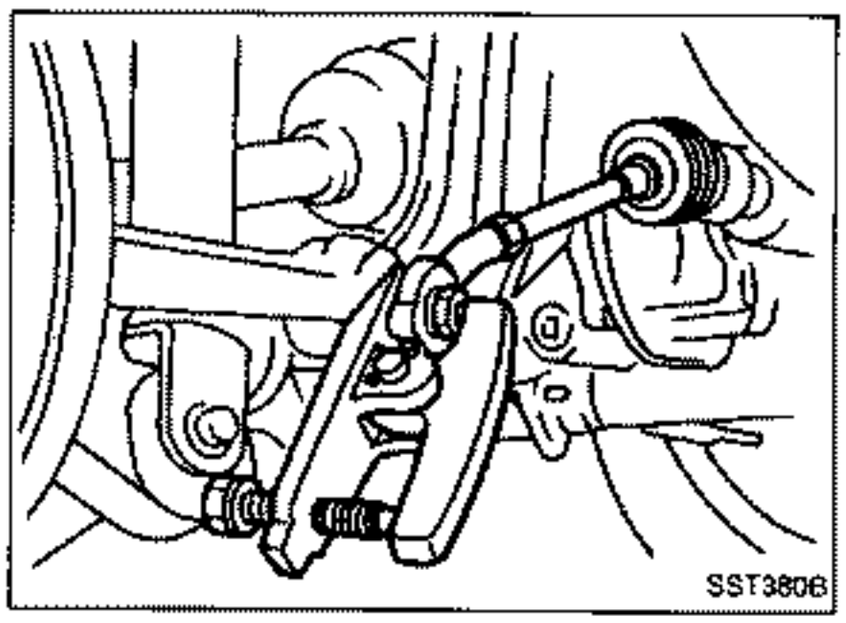

REMOVAL

- Detach power cylinder lower links from axle housing sockets with Tool.

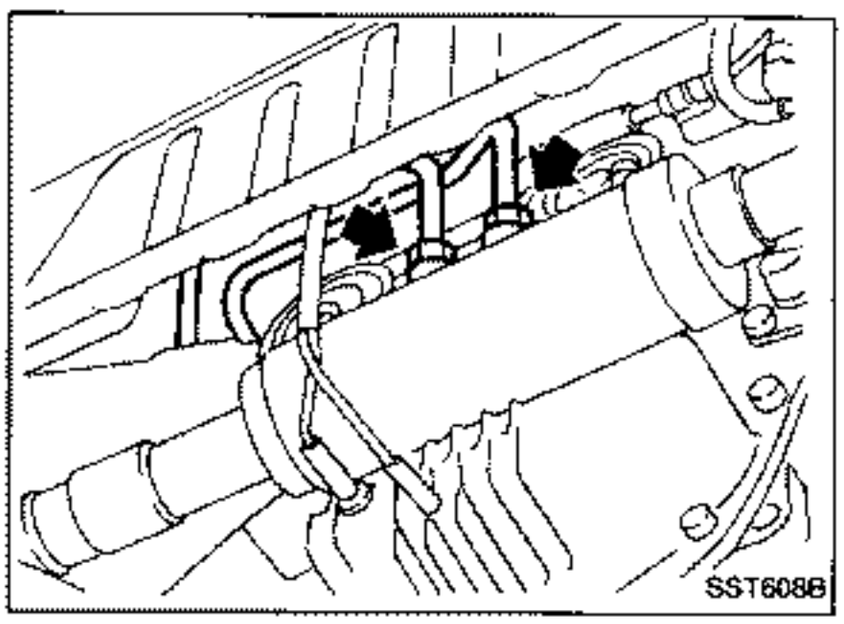

- Disconnect oil pipes from power cylinders and remove power cylinders.

CAUTION:
Plug openings of oil pipes and power cylinders to prevent entry of foreign particles after removal.

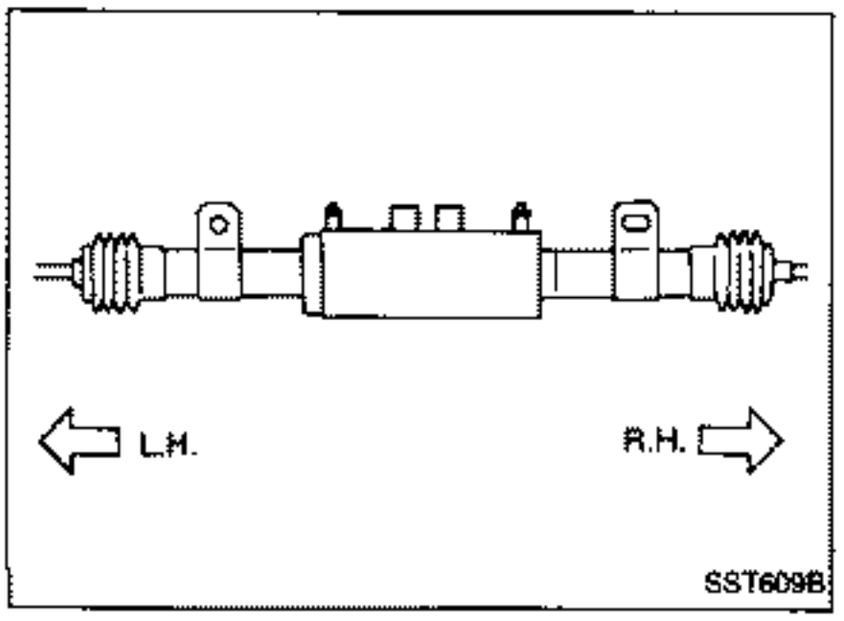

INSTALLATION

1. Before installing power cylinder on suspension member, wipe power cylinder bracket and mating surface of suspension member. Using the left side of the bracket as a reference point, locate the right side (oblong hole side) and install power cylinder.

CAUTION:
a. To prevent entry of foreign particles, clean oil pipes and connectors using dry compressed air.
b. Ensure that your hands are clean and free from foreign particles when connecting oil pipes.

Power Cylinder (Cont'd)

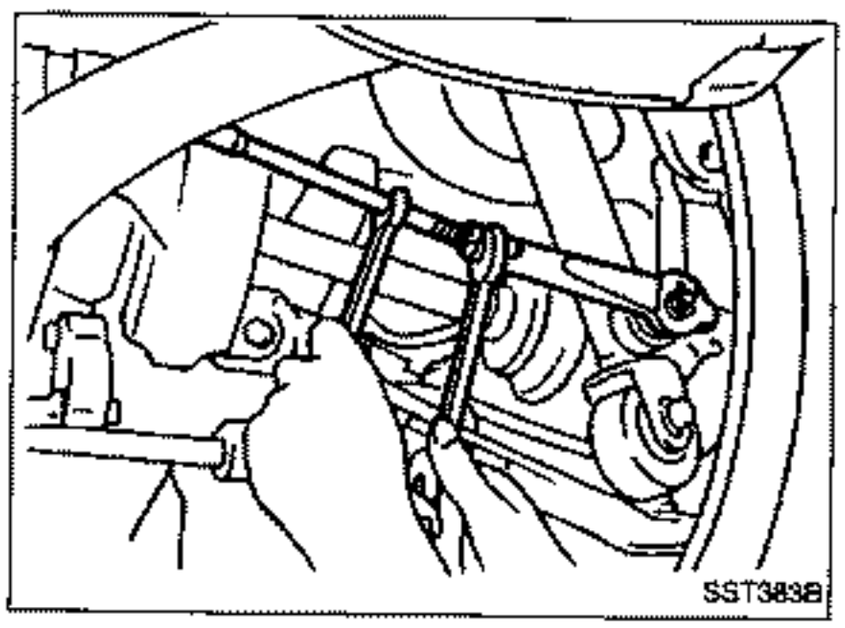

2. Install power cylinders and oil pipes.
3. After installing lower link assemblies, check toe-in to ensure that it is within specifications. If it is not within specifications, perform proper adjustments.
   Refer to "SUPER HICAS" in section RA.

BLEEDING HYDRAULIC SYSTEM

Before bleeding air from the HICAS system, be sure to bleed air from the power steering system.

CAUTION:

Ensure that shift lever is set to "P" (A/T model) or "Neutral" (M/T model).

When CONSULT is used:

1. Connect CONSULT unit to diagnosis connector on body side.
2. Have a helper sit in the driver's compartment and raise vehicle.

Use a two-pole lift or a center pole lift so that the four wheels are free to rotate.

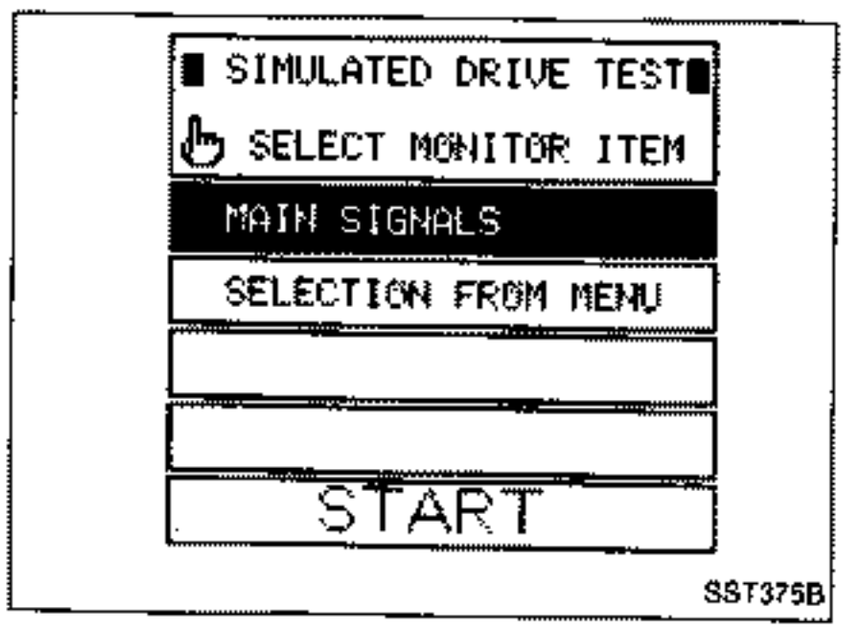

3. Start engine.
4. Touch "START" on CONSULT display. (Display will then change.)
5. Touch "HICAS", "ACTIVE TEST", "SIMULATED DRIVE" and "START" in that order.

Before touching "START", ensure that MAIN SIGNALS display is reversed.

6. Touch "START".

Power Cylinder (Cont'd)

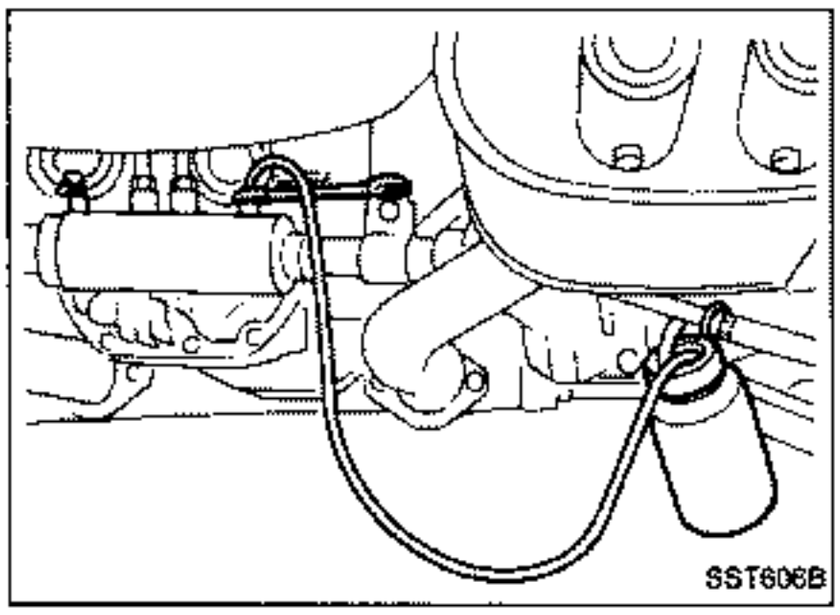

7. Operate engine at speeds greater than 2,000 rpm, and turn steering wheel 180° to the right from the neutral position. Loosen right power cylinder bleeder valve to bleed air, then retighten. Return steering wheel to the neutral position.
8. Operate engine at speeds greater than 2,000 rpm, and turn steering wheel 180° to the left from the neutral position. Loosen left power cylinder bleeder valve to bleed air, then retighten. Return steering wheel to the neutral position.
9. Repeat steps 7. and 8. until there are no air bubbles in fluid. While bleeding air from power cylinders, never allow fluid level to drop below inlet port of reservoir tank (by adding fluid as required).
10. Touch "CANCEL" on CONSULT display and turn ignition switch OFF.

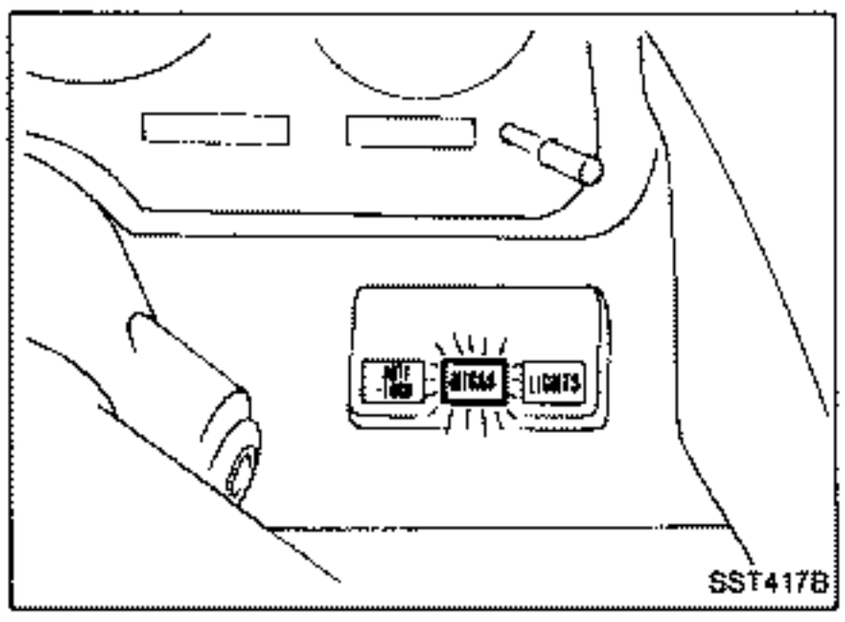

When CONSULT is not used:

1. Have a helper sit in the driver's compartment, and raise vehicle.

Use a two-pole lift or center pole lift so that the four wheels are free to rotate.

2. Set HICAS system in self-diagnosis mode.
(1) Turn ignition switch "OFF".
(2) Set shift lever to "P" or "N" position (A/T model), or "Neutral" position (M/T model).
(3) Turn ignition switch "ON".
(4) Immediately start engine.
(5) Turn steering wheel from left to right (at least 20° from the neutral position) 5 times or more, then depress foot brake pedal at least 5 times all within 10 seconds after ignition switch has been turned "ON".
3. Set steering wheel within 10° from the neutral position. Ensure that rear wheels turn to the left and right alternately.
4. Operate engine at idling speed, and turn steering wheel 180° to the right from the neutral position. Loosen right power cylinder bleeder valve to bleed air, then retighten. Return steering wheel to the neutral position.
5. Operate engine at idling speed, and turn steering wheel 180° to the left from the neutral position. Loosen left power cylinder bleeder valve to bleed air, then retighten. Return steering wheel to the neutral position.
6. Repeat steps 4. and 5. above until there are no air bubbles in fluid. While bleeding air from power cylinders, never allow fluid level to drop below inlet port of reservoir tank (by adding fluid as required).
7. Turn ignition switch OFF to complete self-diagnosis operation.

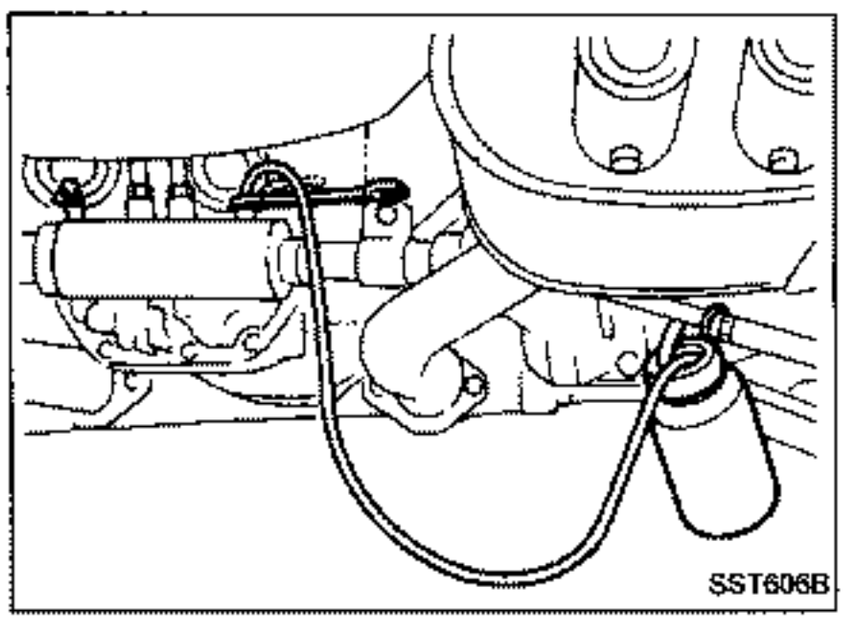

Z.ONE.DATSUN

Power Cylinder (Cont'd)

DISASSEMBLY AND ASSEMBLY

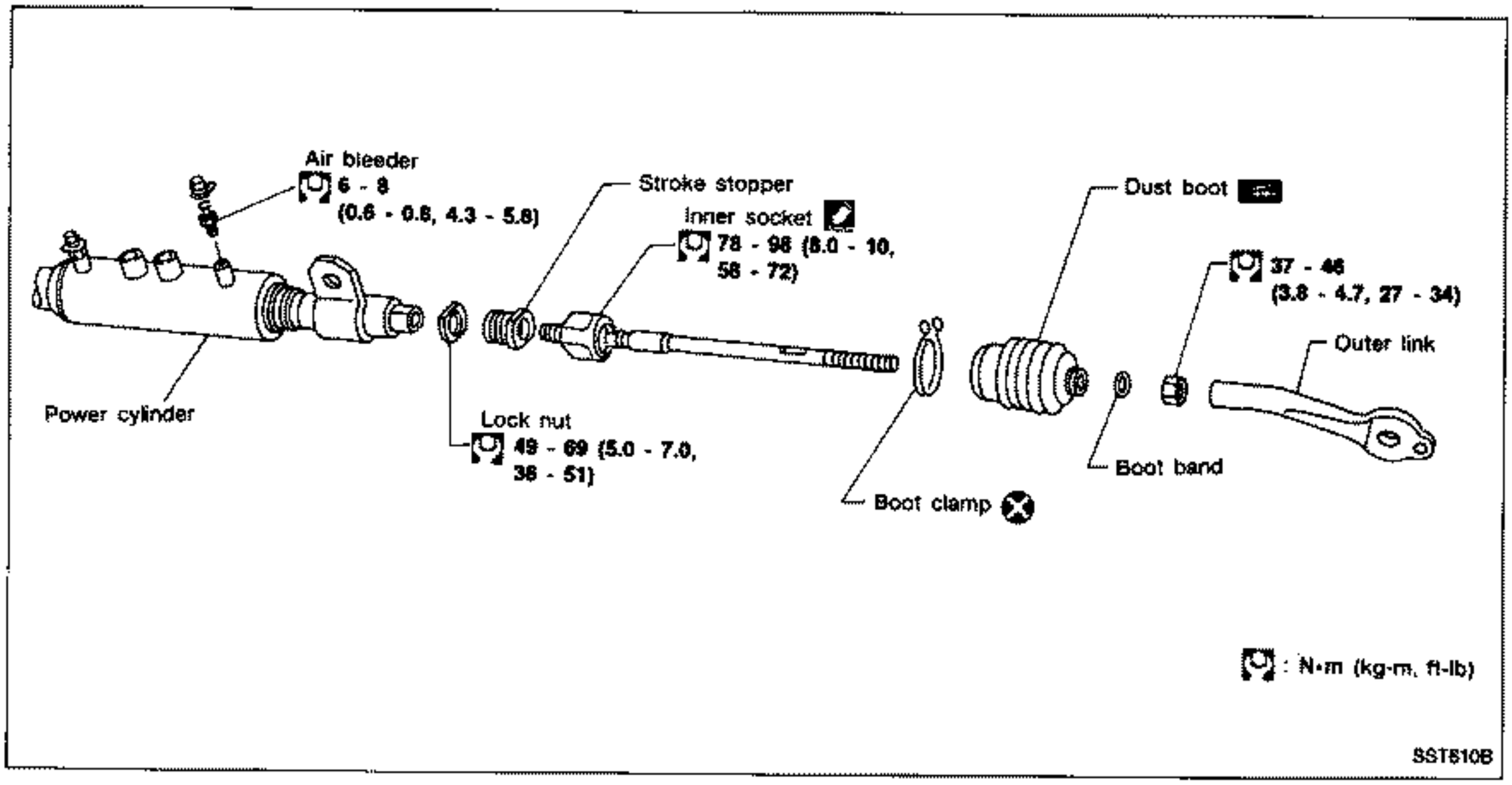

Power cylinder assembly cannot be disassembled. When it is malfunctioning, replace power cylinder as an assembly.

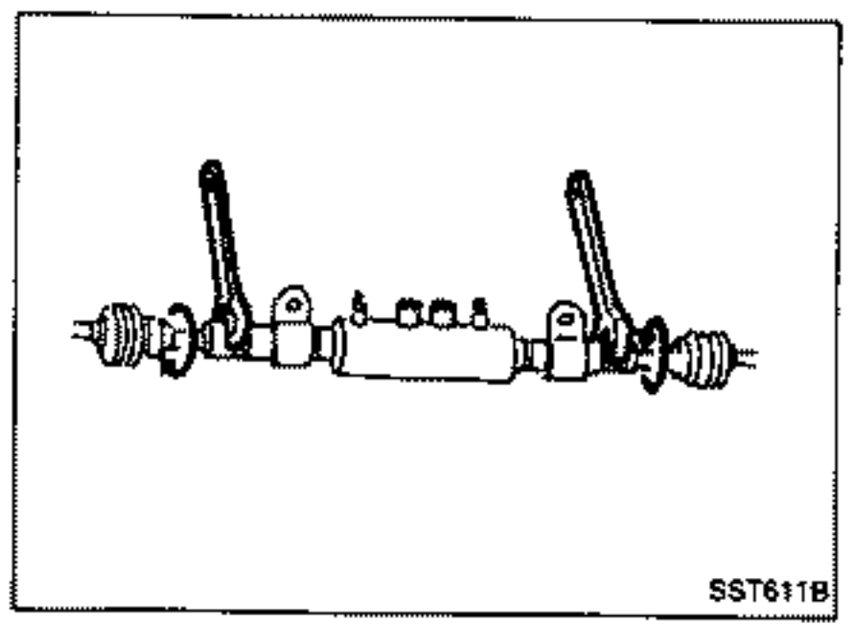

DISASSEMBLY

1. Remove clamps from left and right dust boots, and move dust boots toward outer links.
2. Attach wrenches to left and right ball joint sockets, and turn in directions that loosen lower links. Remove one of loosened lower link assemblies.

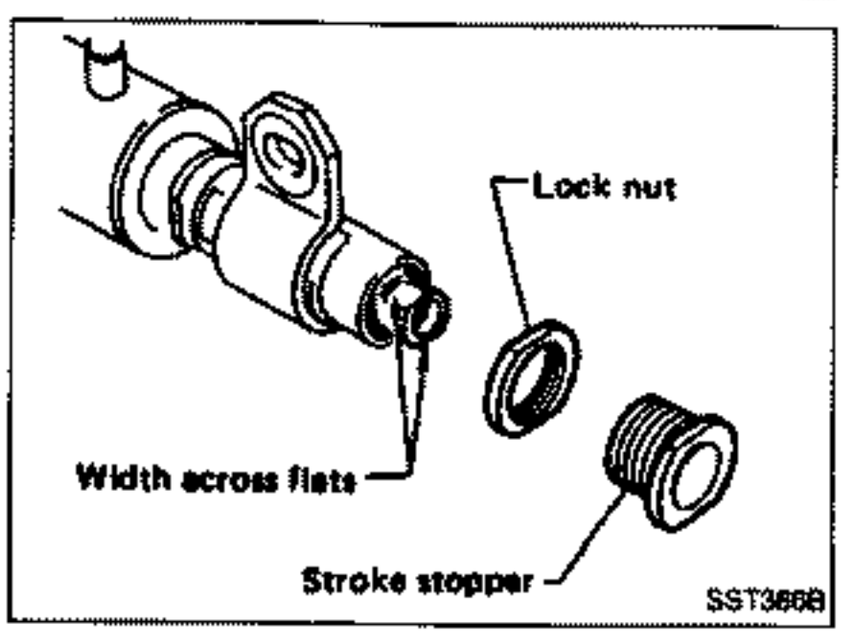

3. Loosen stroke stopper lock nut from which lower link assembly was removed, and remove stroke stopper.

Power Cylinder (Cont'd)

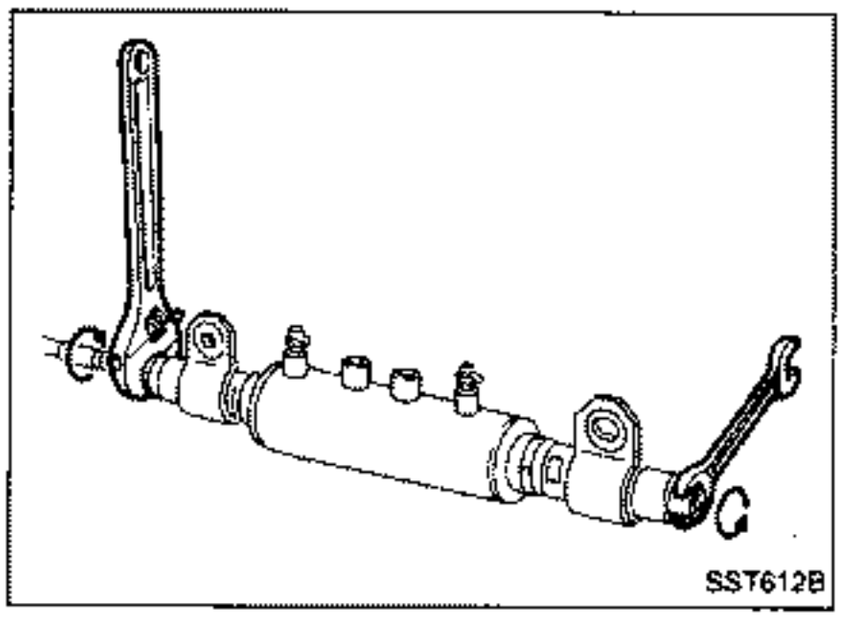

- While attaching a wrench to "width across flats" section of rod end from which stroke stopper was removed, remove the other lower link assembly.

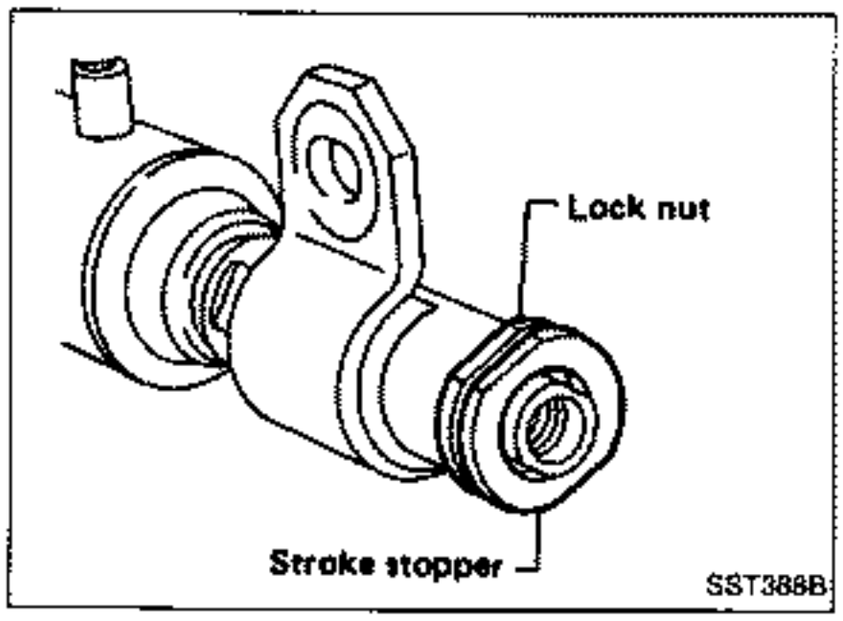

ASSEMBLY

1. Install stroke stopper and lock nut on the lower link assembly to be assembled.

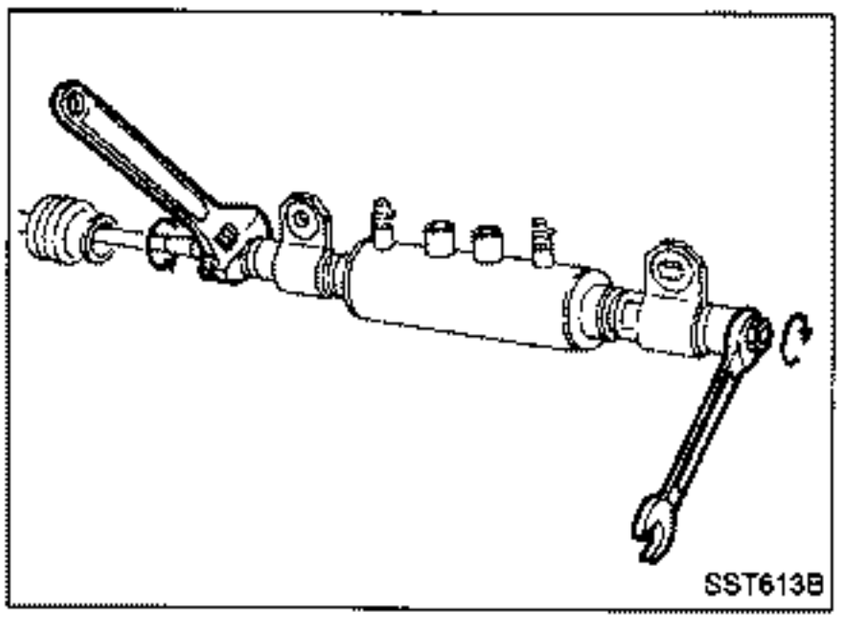

2. Apply Locktite to inner ball joint thread. Attach a wrench to "width across flats" section of piston rod (located on the other side) to prevent rod from turning. Install lower link assembly.

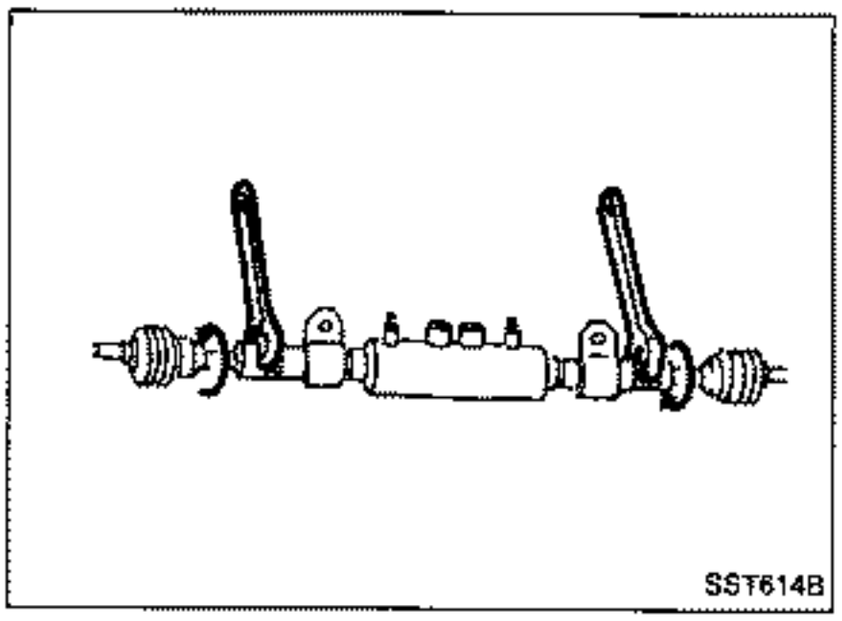

3. After installing stroke stopper and lock nut on the other lower link assembly, install lower link assembly. Attach a wrench to inner ball joint (to prevent it from turning), tighten inner socket to specified torque.
   Inner socket:
   : 78 - 98 N·m (8 - 10 kg-m, 58 - 72 ft-lb)

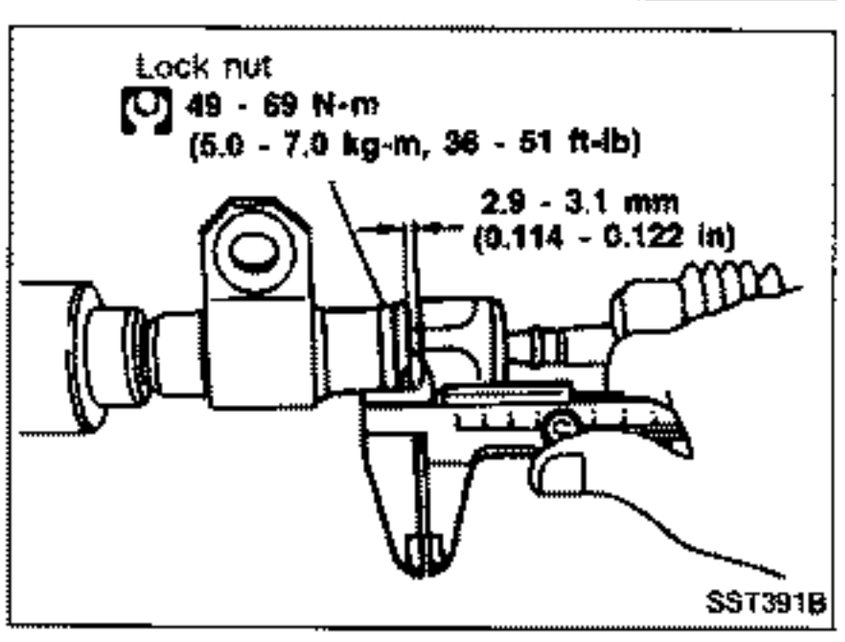

4. If stroke stopper was moved during removal of lower link, adjust it after installation, as described below:
(1) Loosen lock nut which secures stroke stopper.
(2) Turn stroke stopper until clearance between inner ball joint and stroke stopper is 2.9 to 3.1 mm (0.114 to 1.122 in) on each side.
(3) Tighten lock nut securely.
   Lock nut:
   : 49 - 69 N·m (5.0 - 7.0 kg-m, 36 - 51 ft-lb)
(4) Recheck clearance between inner ball joint and stroke stopper on each side.

Z.ONE.DATSUN

Power Cylinder (Cont'd)

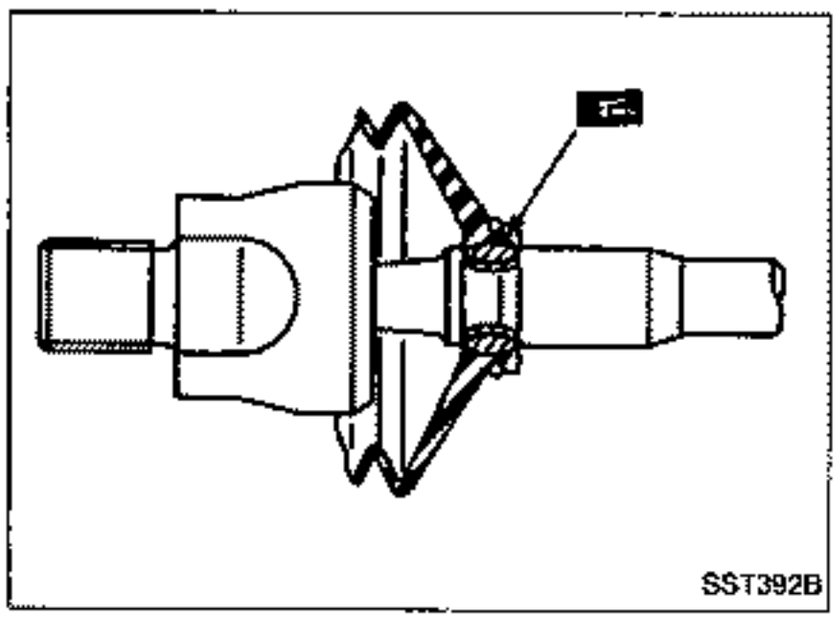

5. Install dust boot using new boot band and clamp.

- **Apply a coat of grease to grooves at boot location.**

Oil Pump

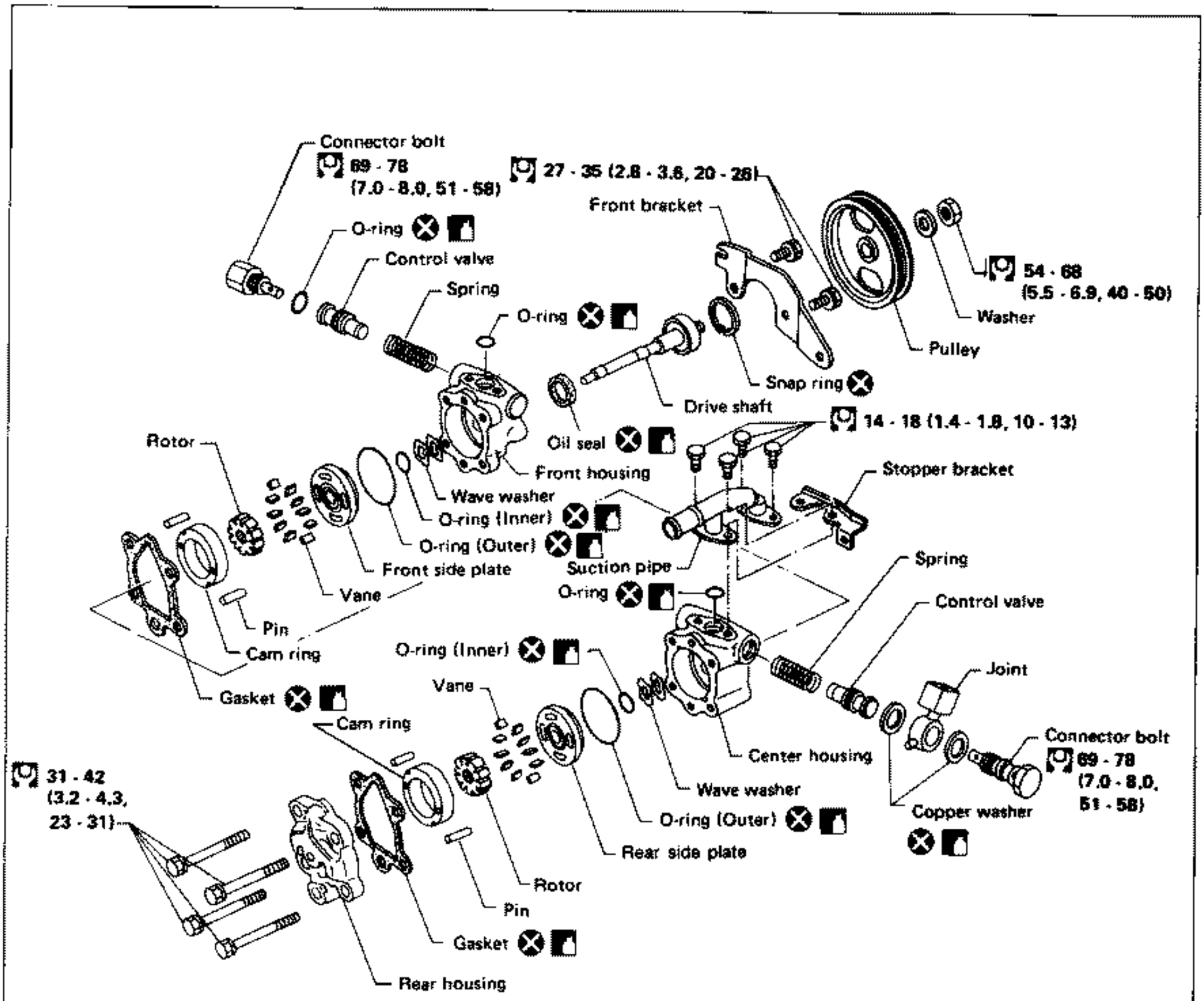

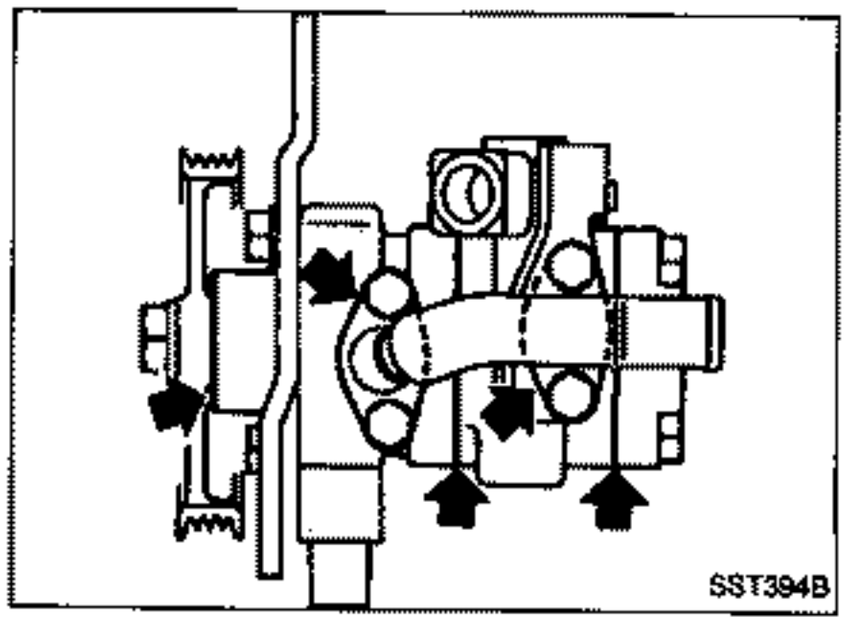

PRE-DISASSEMBLY INSPECTION

Disassemble the power steering oil pump only if the following items are found.

- Oil leak from any point shown in the figure.
- Deformed or damaged pulley.

Procedures for disassembly and assembly are the same as those for the power steering oil pump.

Disassembly

CAUTION:

- **Parts which can be disassembled are strictly limited. Never disassemble parts other than those specified.**
- **Disassemble in as clean a place as possible.**
- **Clean your hands before disassembly.**
- **Do not use rags; use nylon cloths or paper towels.**
- **Follow the procedures and cautions in the Service Manual.**
- **When disassembling and reassembling, do not let foreign matter enter or contact the parts.**

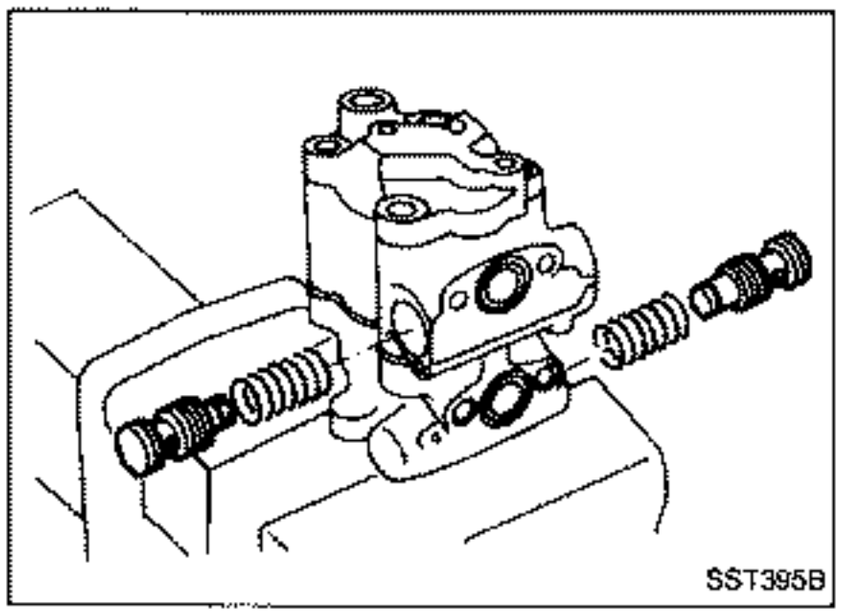

1. Remove connector.

Be careful not to drop control valve.
Be careful not to confuse main side with sub side.

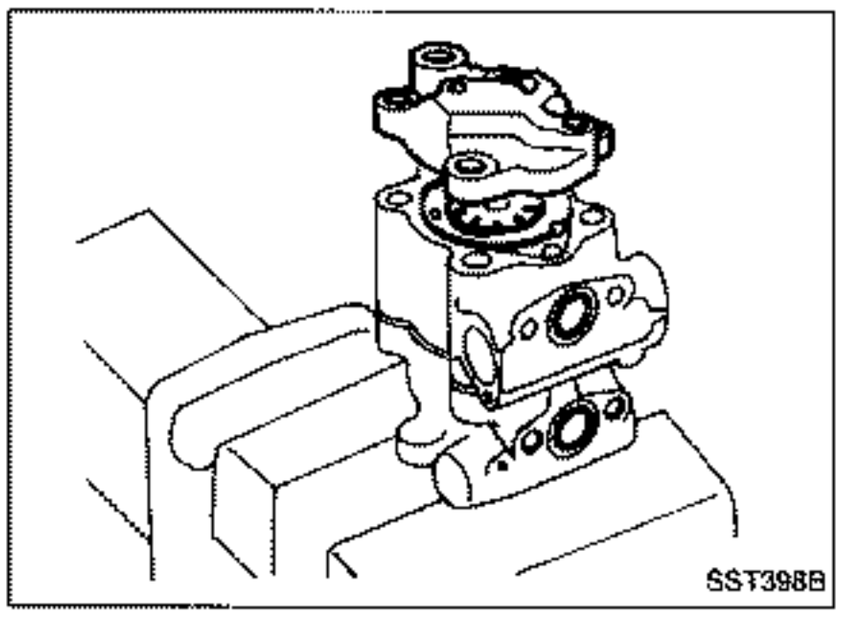

2. Remove rear housing.
3. Remove center housing.
4. Remove cam ring, rotor and other parts from center housing (sub side).

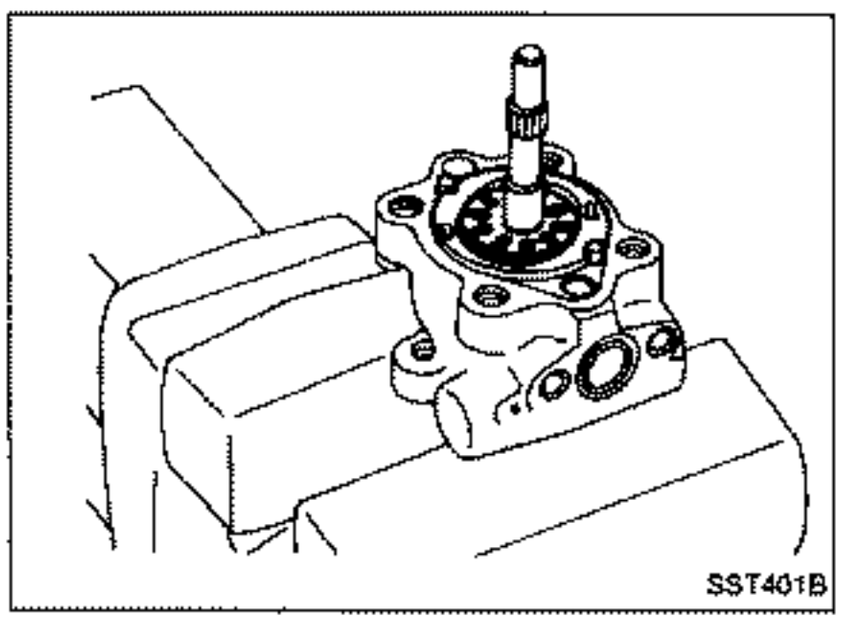

5. Remove cam ring, rotor and other parts from front housing (main side).

Be careful not to confuse main side with sub side.

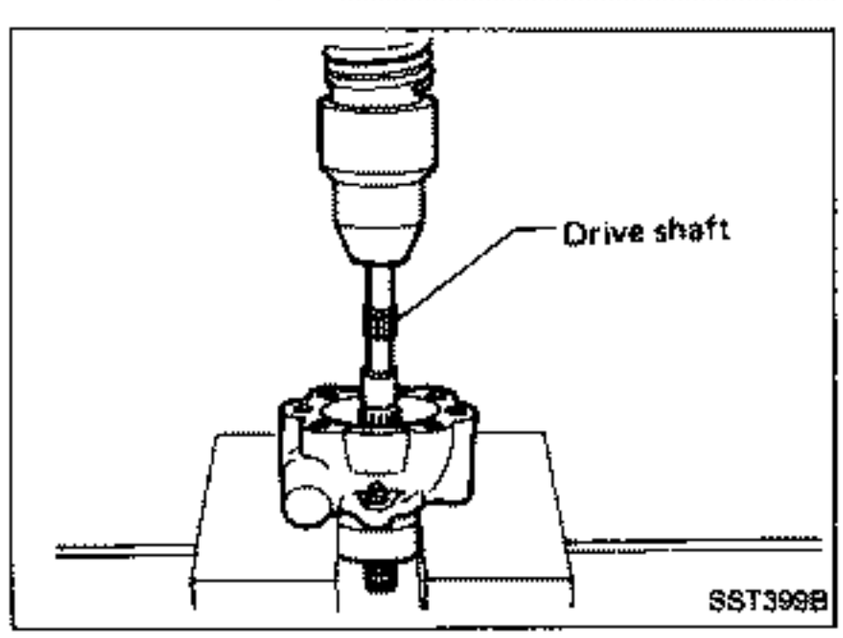

6. Remove snap ring, then draw drive shaft out.

Be careful not to drop drive shaft.

Disassembly (Cont'd)

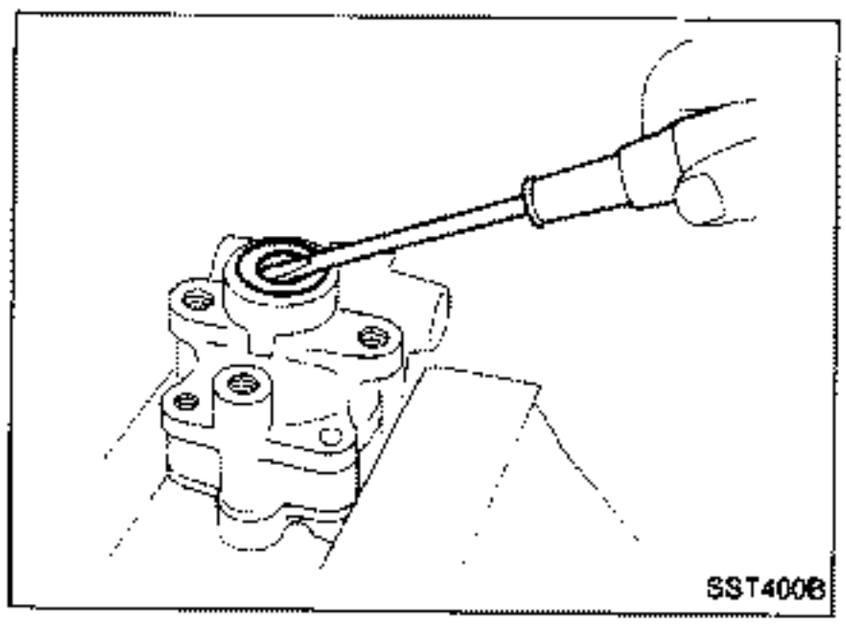

7. Remove oil seal.

Be careful not to damage front housing.

Inspection

If any of the following parts are scratched or damaged, replace oil pump assembly.

- Mating surfaces of front housing and cam center housing
- Mating surfaces of rear housing and cam center housing
- Front housing bushing (at drive shaft support location)
- Flow control valve
- Drive shaft
- Rotor

Assembly

Assemble oil pump in the reverse order of disassembly, noting the following instructions.

- Before installation, coat the O-rings and oil seal with A.T.F.
- Make sure O-rings and oil seal are properly installed.
- When assembling vanes to rotor, rounded surfaces of vanes must face cam case side.
- Always install new O-rings and oil seal.
- Be careful of oil seal direction.

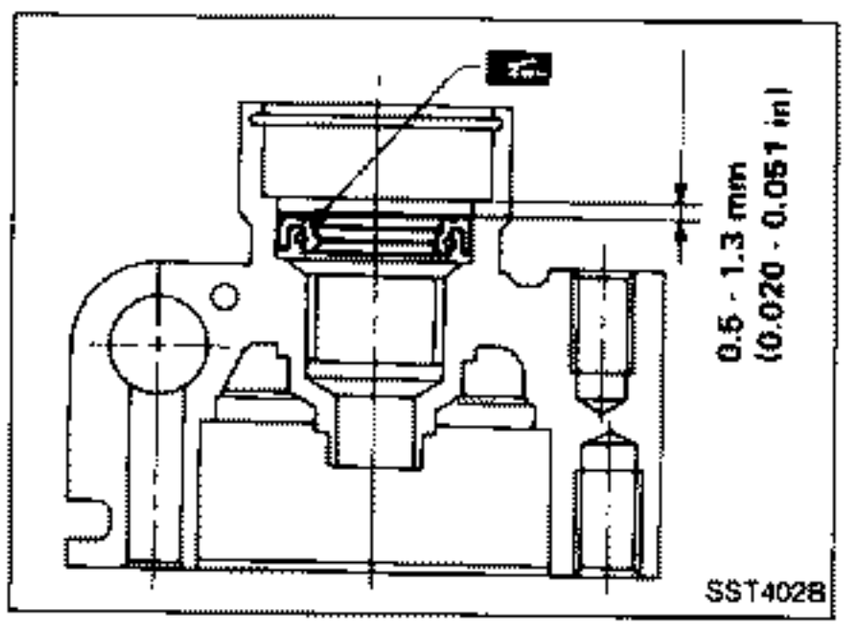

1. Press oil seal into front housing and apply grease to sealing lips.

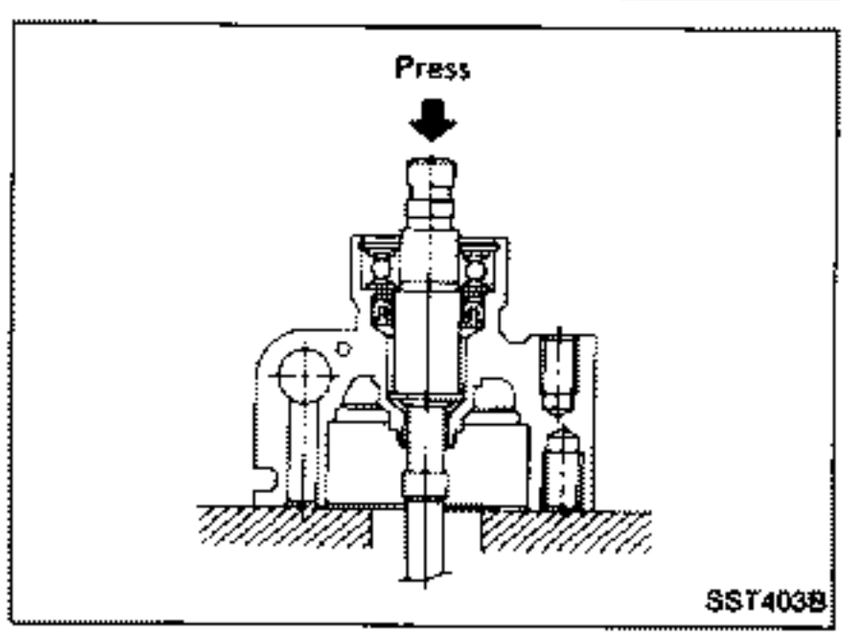

2. Press shaft assembly into front housing and install snap ring.

Assembly (Cont'd)

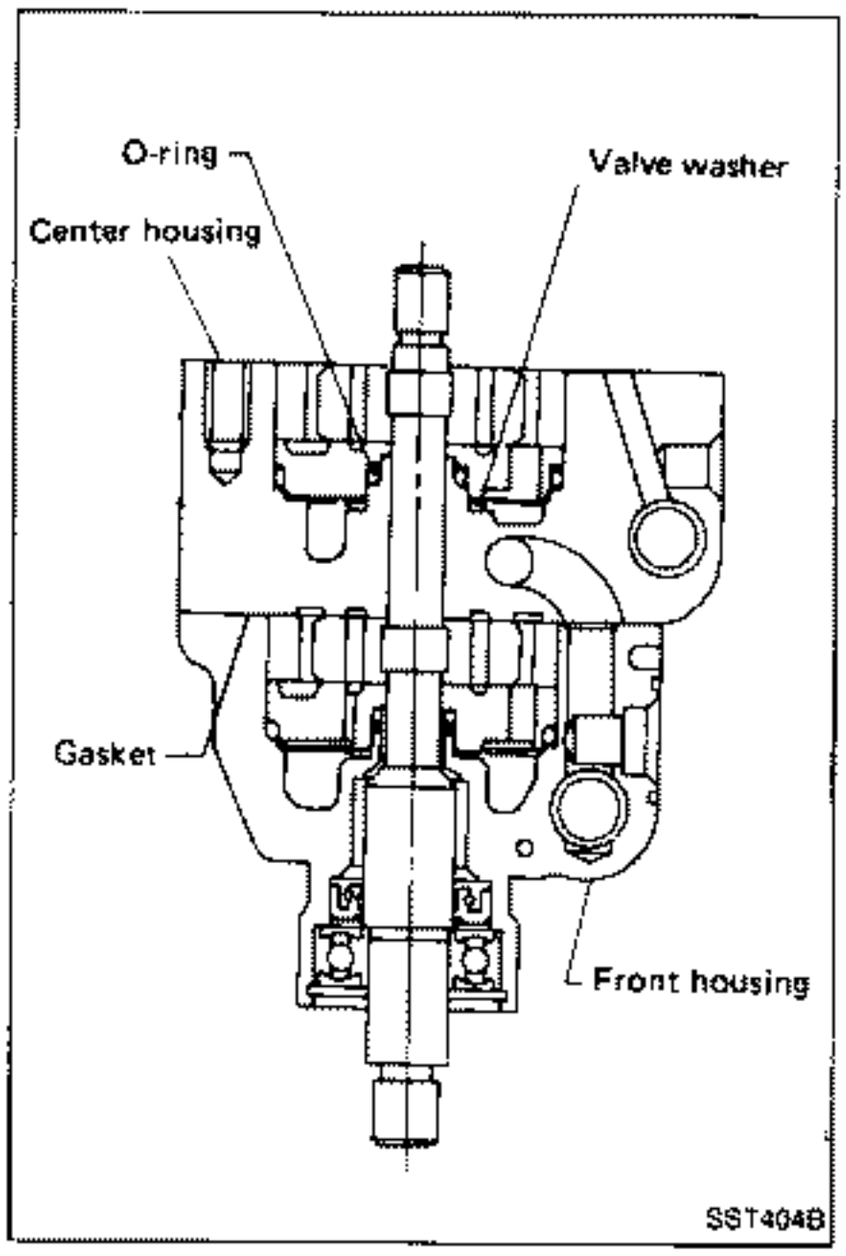

3. Install component parts on front housing in the order indicated below:
1) O-ring x 2
2) Wave washer
3) Side plate
4) Rotor [thickness: 16.25 mm (0.6398 in) (main side); 13 mm (0.51 in) (sub side)]
5) Vane
6) Pin
7) Cam ring [thickness: 16.25 mm (0.6398 in) (main side); 13 mm (0.51 in) (sub side)]
4. Place packing on front housing and position center housing on the packing. In the manner similar to step 3. above, install component parts on front housing (sub side).

CAUTION:
- **Ensure that O-rings are positioned properly.**
- **Ensure that vane is installed with curved side facing cam ring.**
- **Use cam, rotor vane as original single unit.**
- **Ensure that control valve moves smoothly.**

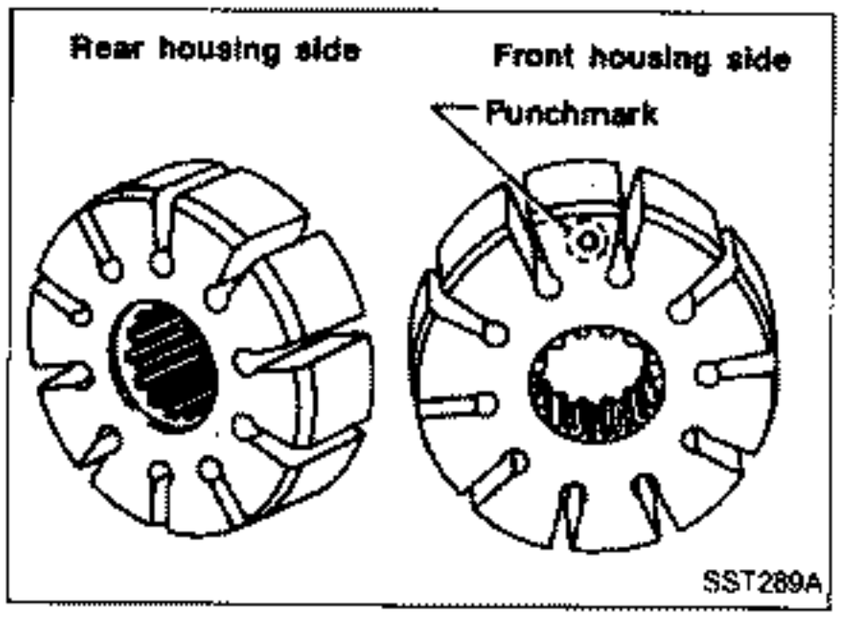

- Pay attention to rotor direction.

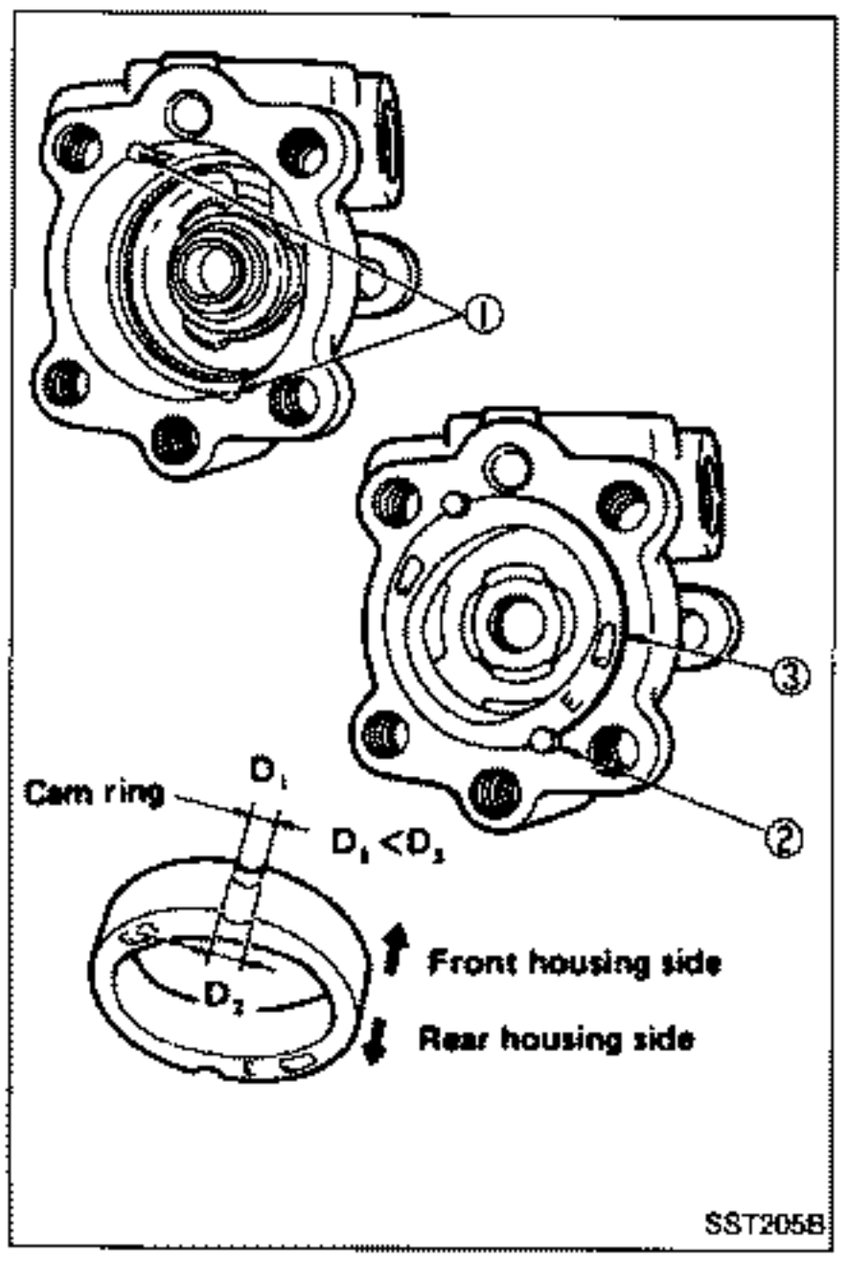

- Pay attention to cam ring direction.

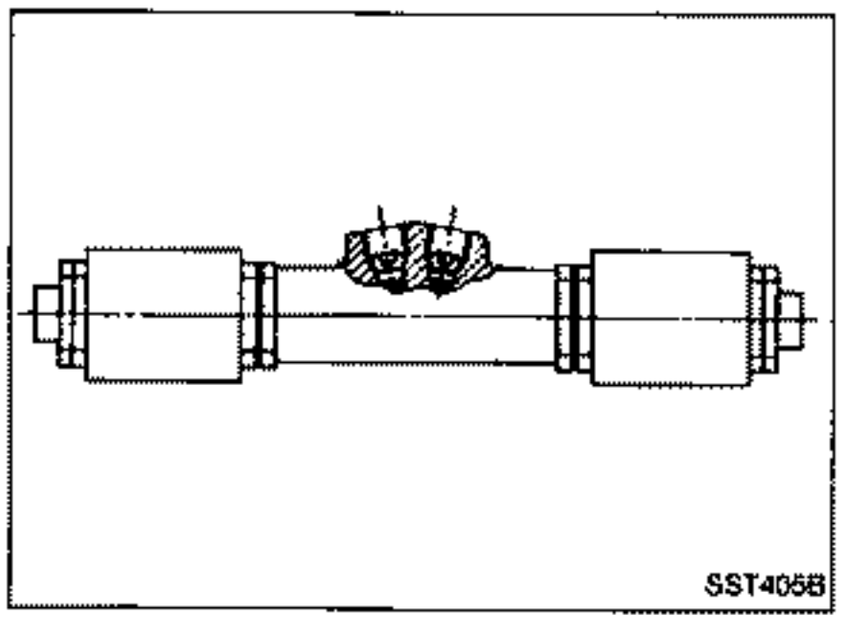
SST405B

HICAS Solenoid Valve and Fail-safe Valve

- Do not loosen lock nut which secures solenoid since HICAS solenoid fair-safe valves are of types that should not be disassembled.
- If any part is found to be malfunctioning, always replace as a valve assembly.

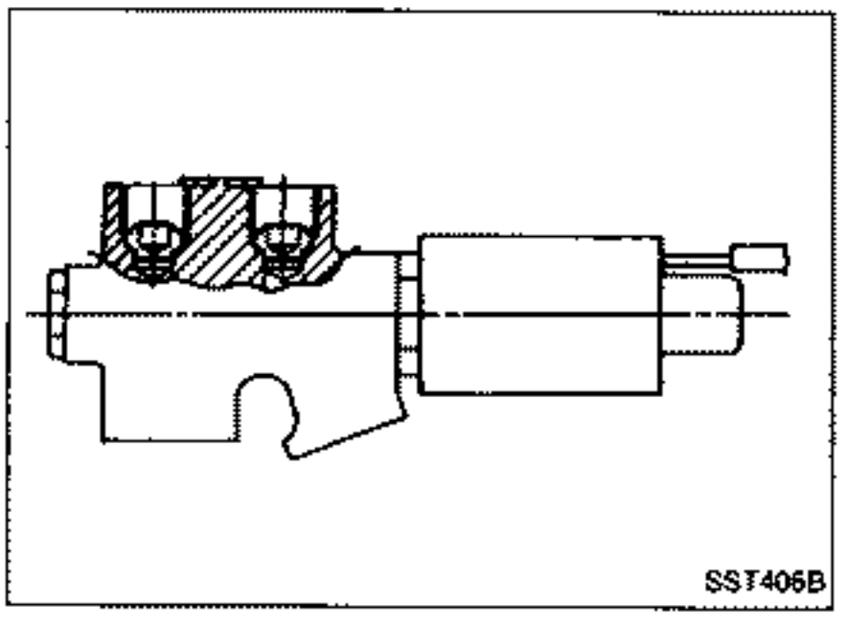
SST406B

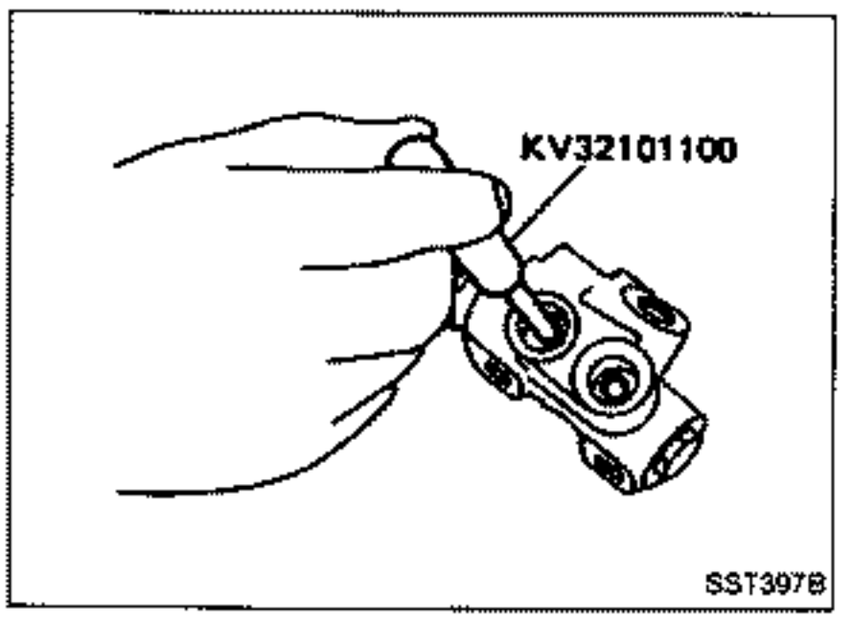

SST397B

- Whenever tubes are disconnected, check tube seat for scratches or damage. A scratched or cracked tube seat may cause oil leakage. Replace it using pin punch.

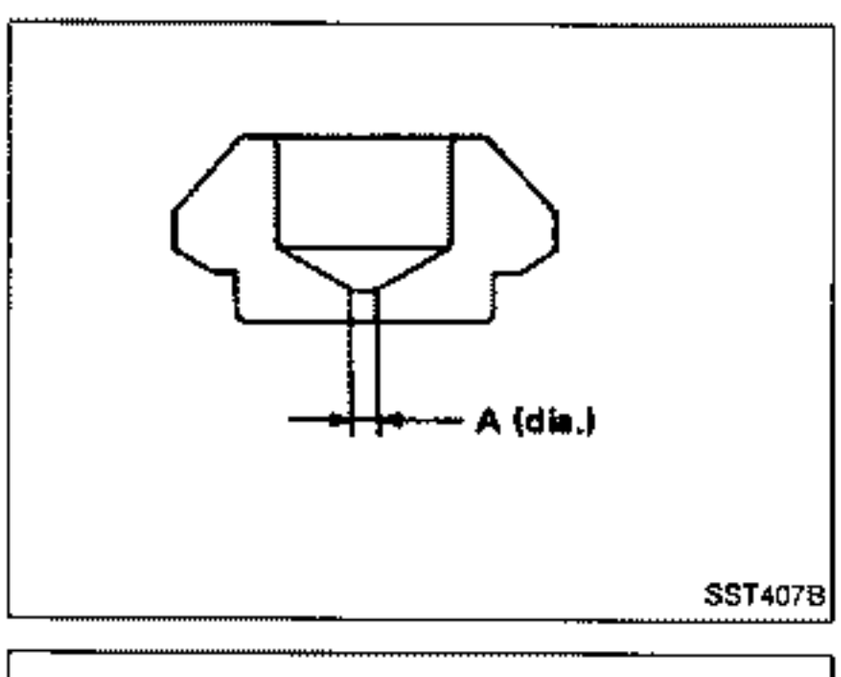

SST407B

		HICAS solenoid valve	Fail-safe valve
Part No.		49528-31P10	49528-52L10
A (dia.)	mm (in)	1.5 (0.059)	6.5 (0.256)

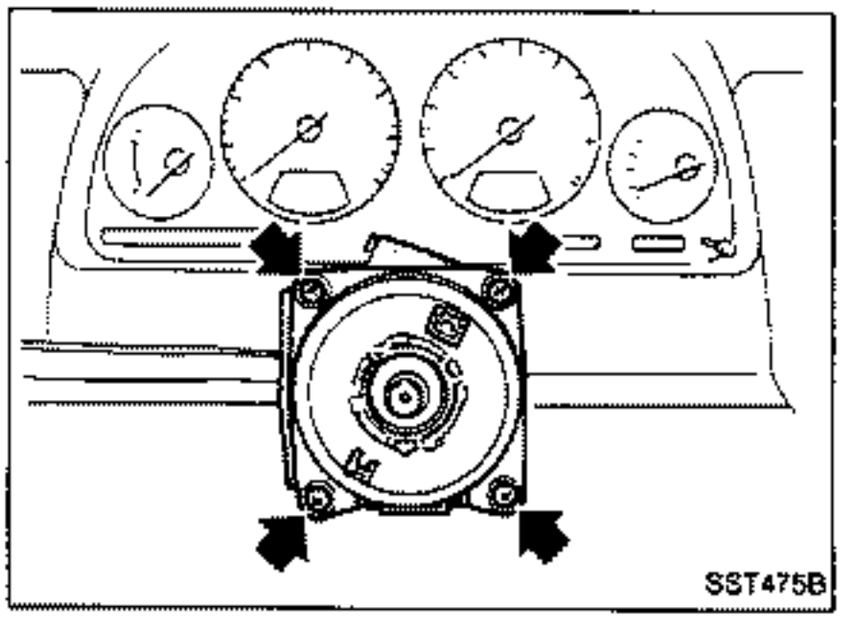
SST475B

Steering Angle Sensor

- Ensure that steering angle sensor bolts are secure and tight.
- If any part of steering angle sensor is malfunctioning, replace steering angle sensor assembly.

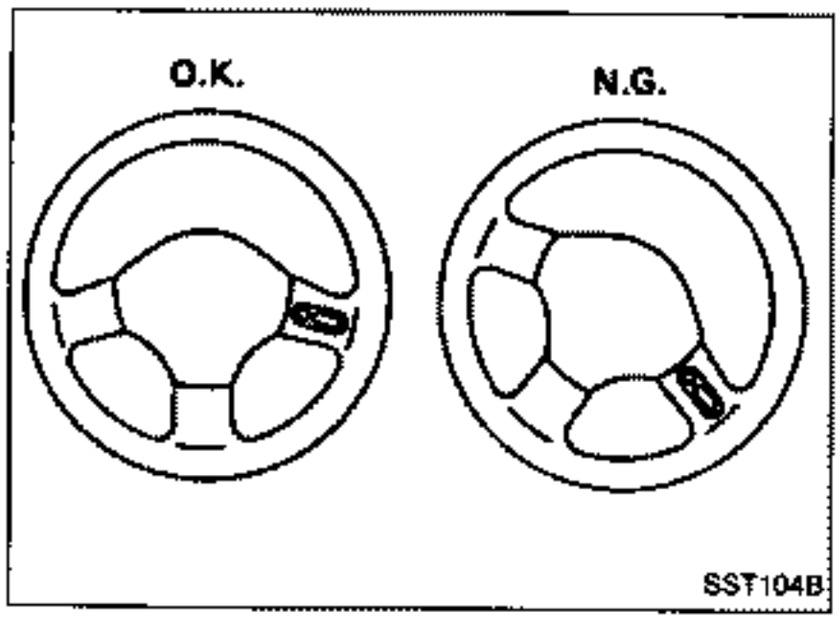

Steering Wheel

CHECKING NEUTRAL POSITION

- Check that the steering wheel is in the neutral position when driving straight ahead at a speed of at least 70 km/h (43 MPH).
- If it is not in the neutral position, remove the steering wheel and reinstall it correctly.
- If the neutral position is between two serrated teeth, loosen tie-rod lock nut and move tie-rod in the opposite direction by the same amount on both left and right sides to compensate for error in the neutral position.

Contents

How to Perform Trouble Diagnoses for Quick and Accurate Repair ST-61
Symptom Chart ST-62
Preliminary Check ST-63
Component Parts and Harness Connector Locations ST-66
Circuit Diagram for Quick Pinpoint Check ST-67
Wiring Diagram ST-68
Self-diagnosis (When CONSULT is used) ST-70
Self-diagnosis (When CONSULT is not used) ST-73
Diagnostic Procedure 1 ..... ST-76
Diagnostic Procedure 2 ..... ST-77
Diagnostic Procedure 3 ..... ST-79
Diagnostic Procedure 4 ..... ST-80
Diagnostic Procedure 5 ..... ST-86
Diagnostic Procedure 6 ..... ST-88
Diagnostic Procedure 7 ..... ST-89
Diagnostic Procedure 8 ..... ST-90
Diagnostic Procedure 9 ..... ST-91
Diagnostic Procedure 10 ..... ST-92
Diagnostic Procedure 11 ..... ST-94
Diagnostic Procedure 12 ..... ST-95
Control Unit Inspection Table ST-96

How to Perform Trouble Diagnoses for Quick and Accurate Repair

WORK FLOW

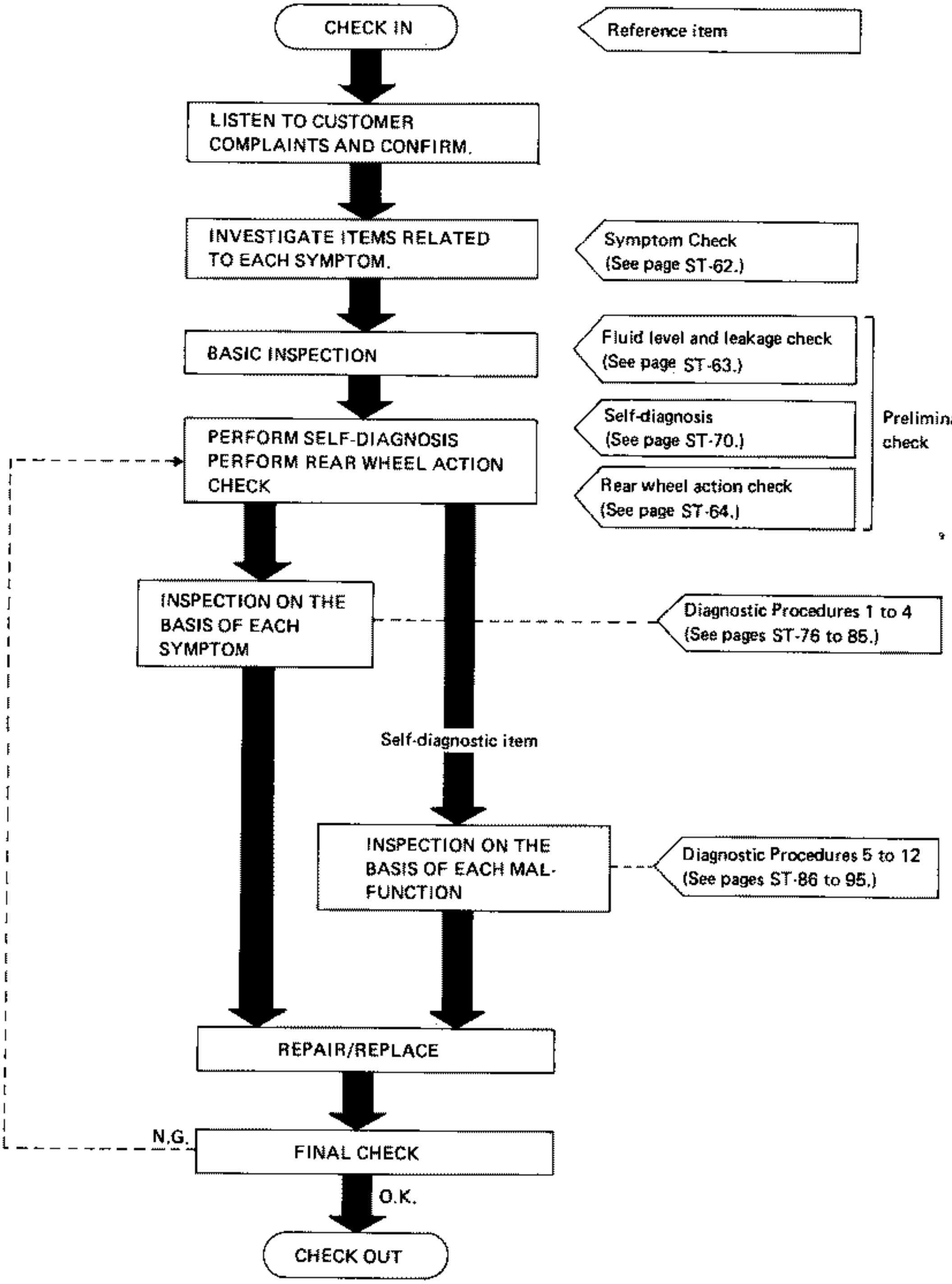

Symptom Chart

DIAGNOSTIC TABLE

PROCEDURE				Preliminary Check			Diagnostic Procedure											
REFERENCE PAGE (ST-)				63	63	64	76	77	79	80	86	88	89	90	91	92	94	95
SYMPTOM				Preliminary check 1	Preliminary check 2	Preliminary check 3	Diagnostic procedure 1	Diagnostic procedure 2	Diagnostic procedure 3	Diagnostic procedure 4	Diagnostic procedure 5	Diagnostic procedure 6	Diagnostic procedure 7	Diagnostic procedure 8	Diagnostic procedure 9	Diagnostic procedure 10	Diagnostic procedure 11	Diagnostic procedure 12
No warning lamp comes on when ignition switch is turned "ON"				○			○											
Warning lamp comes on when engine is running				○	○	○		○		○	○	○	○	○	○	○	○	○
Abnormal noise is emitted.				○	○	○			○									
Vehicle behavior is unusual (due to malfunctioning HICAS system.)				○	○	○				○	○	○	○	○	○	○	○	○
Self-diagnostic results	System is not set in self-diagnosis mode.										○							
	Self-diagnosis code No.	Diagnosed part	CONSULT indication															
	1	HICAS solenoid valve (RH) output is not present.	HICAS SOLENOID-R [ABNORMAL SIGNAL]									○						
	2	HICAS solenoid valve (LH) output is not present.	HICAS SOLENOID-L [ABNORMAL SIGNAL]									○						
	3	Fail-safe valve output is not present.	FAIL-SAFE VALVE [ABNORMAL SIGNAL]										○					
	4	Power steering solenoid output is not present.	POWER STEERING SOL [ABNORMAL SIGNAL]											○				
	5	Vehicle speed signal is not present.	VEHICLE SPEED SENSOR [NO SIGNAL] (-a) CAR SPEED SENSOR [SIG-SUDDEN TURN] (-b)												○			
	6	Steering angle sensor input is not present.	STEERING ANGLE SEN [NO ANG SIGNAL] (-a) STEERING ANGLE SEN [NO NEUT SIGNAL] (-b) STEERING ANGLE SEN [NEUT SIG-360° OFF] (-c) STEERING ANGLE SEN [NEUT SIG-30° ON] (-d)												○			
	7																	
	8	Parking brake (AT) or clutch switch (MT) input is not present.	—													○		
	9	Inhibitor switch (AT) or neutral switch (MT) input is not present.	—															○

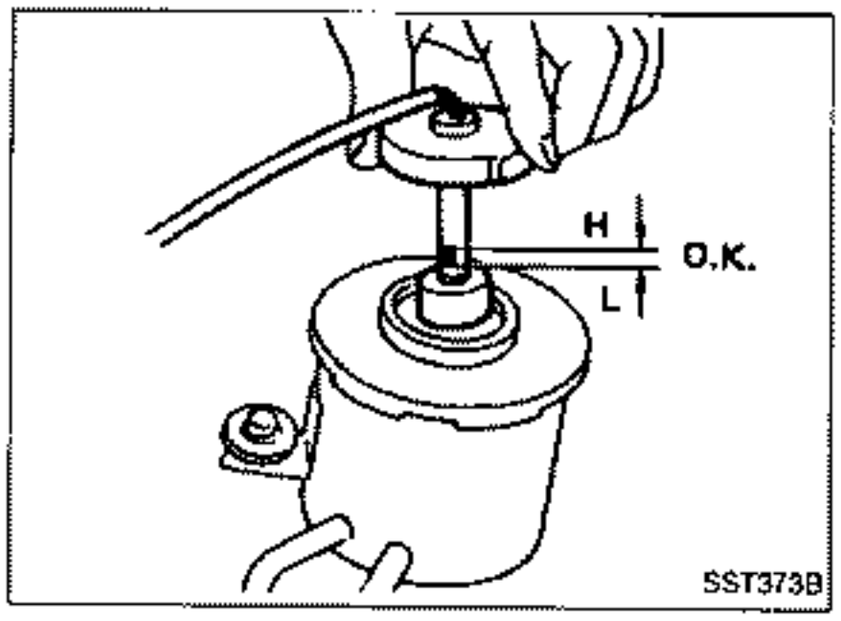

Preliminary Check

CHECK 1

Checking fluid level and fluid leakage

Refer to "SUPER HICAS SYSTEM — On-vehicle Inspection" on page ST-44.

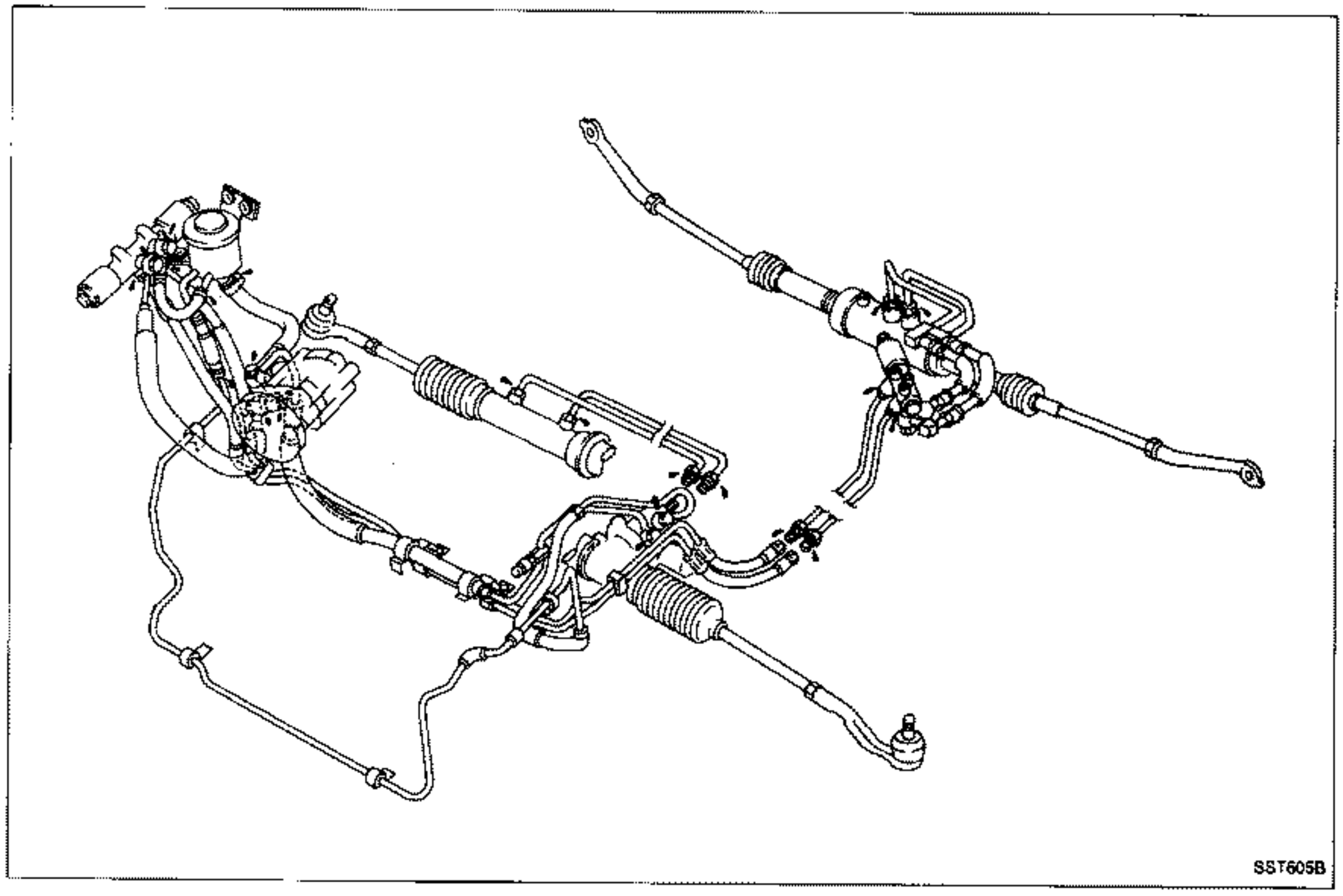

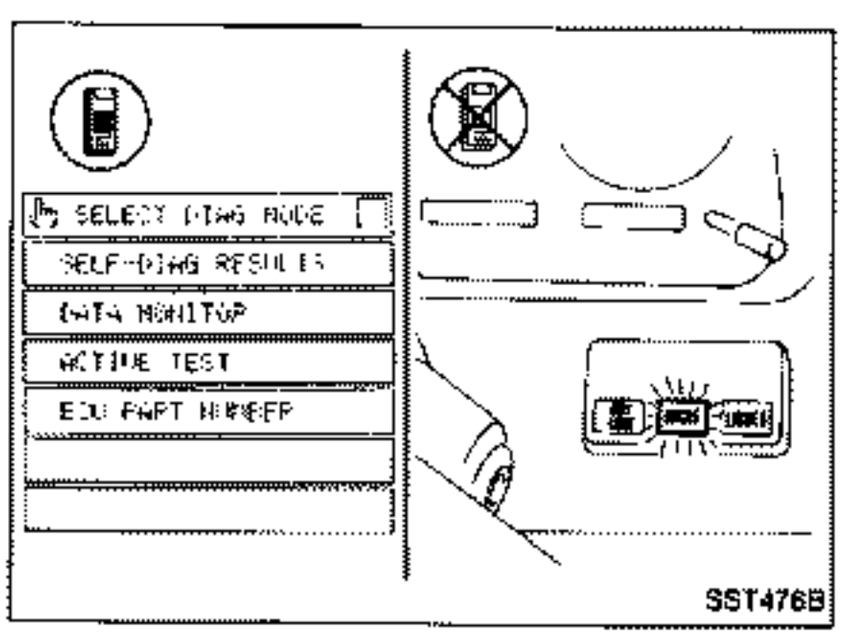

CHECK 2

Perform self-diagnosis.
Refer to "Self-diagnosis" on page ST-70.

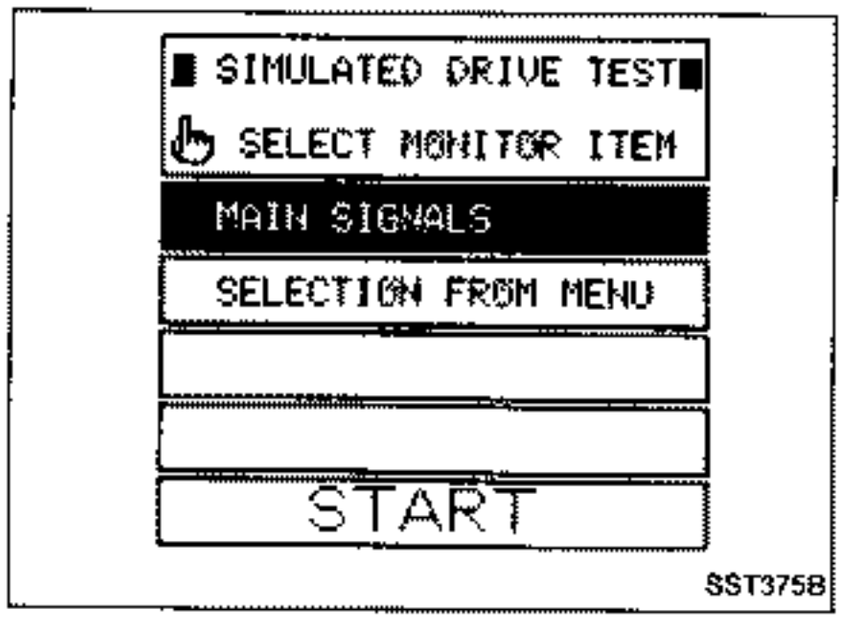

Preliminary Check (Cont'd)

CHECK 3

Perform rear wheel action check.

When CONSULT is used:

1. Have a helper sit in the driver's compartment, and raise vehicle.
   (Use a two-pole lift or a center pole lift so that the four wheels are free to rotate.)
2. Connect CONSULT unit to diagnosis connector and start engine.
3. Touch "START" on CONSULT display.
4. Touch "HICAS", "ACTIVE TEST" and "SIMULATED DRIVE" in that order.
5. Touch "START" when "MAIN SIGNALS" display is reversed.

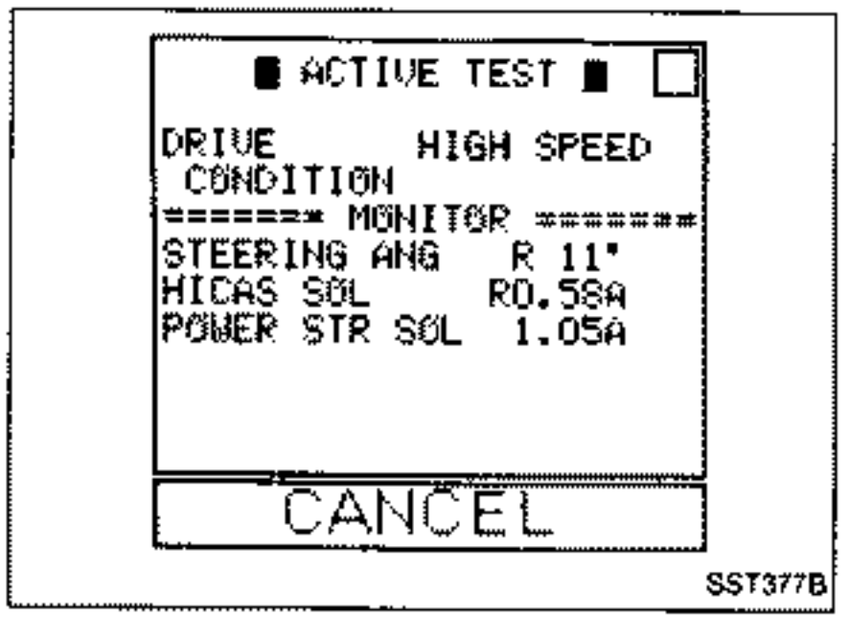

6. Touch "START".

After simulated drive condition has continued for 5 minutes, it will automatically cancel and CONSULT unit will then show "TEST IS INTERRUPTED TO AVOID OIL TEMP RISE" display. To cancel this mode during self-diagnosis, simply touch "CANCEL".

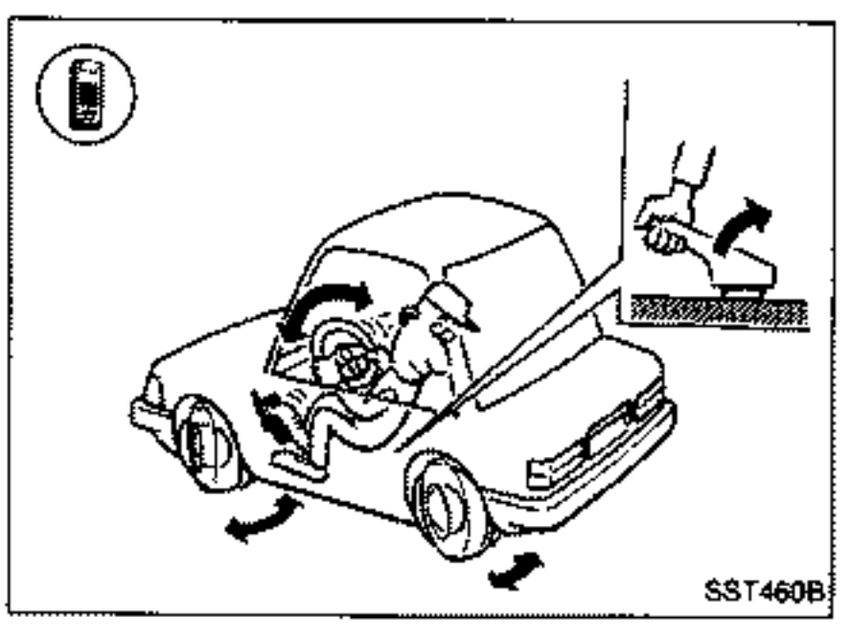

7. While running engine at speeds greater than 2,000 rpm, turn steering wheel 180° to the left and right from the neutral position. Ensure that rear wheels steer in response to rotation of steering wheel.

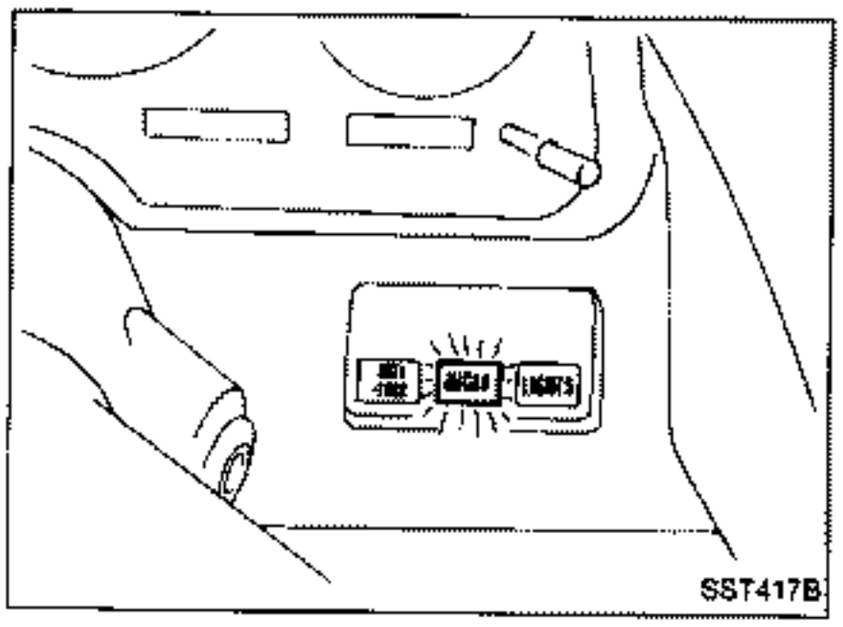

Preliminary Check (Cont'd)

When CONSULT is not used:

1. Have a helper sit in the driver's compartment and raise vehicle.
   (Use a 2-pole lift or a center pole lift so that the four wheels are free to rotate.)
2. Set HICAS system in self-diagnosis mode.
(1) Turn ignition switch "OFF".
(2) Set shift lever to "P" or "N" position (A/T model), or "Neutral" position (M/T model).
(3) Turn ignition switch "ON".
(4) Immediately start engine.
(5) Turn steering wheel from left to right (at least 20° from the neutral position) 5 times or more, then depress foot brake pedal at least 5 times all within 10 seconds after ignition switch has been turned "ON".
3. Set steering wheel to a point approximately 10° from the neutral position and check to ensure that rear wheels turn to the left and right alternately.

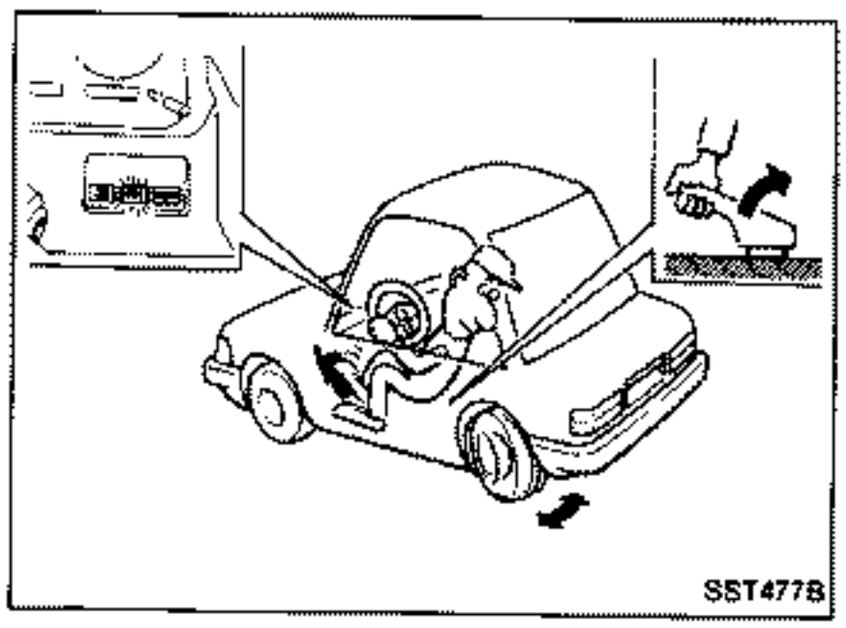

Component Parts and Harness Connector Location

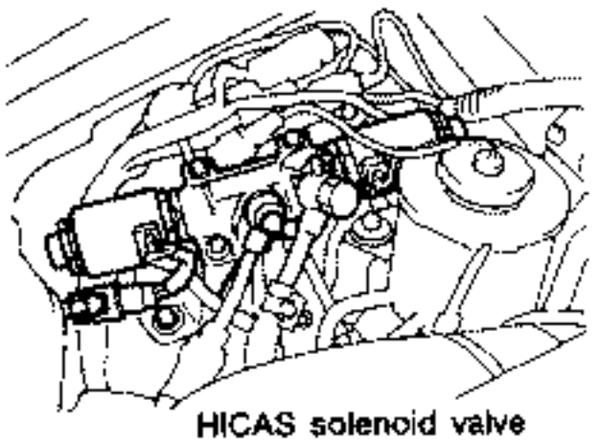
HICAS solenoid valve

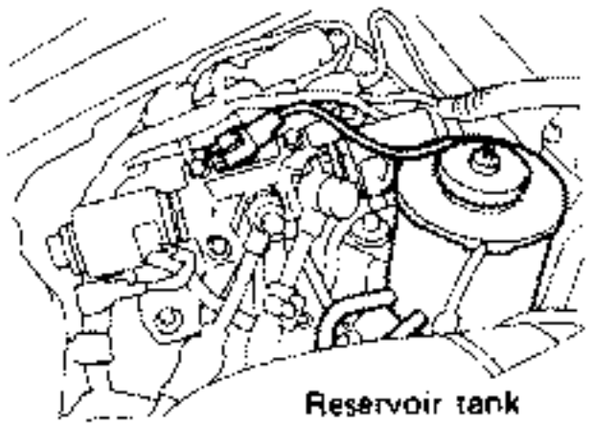
Reservoir tank

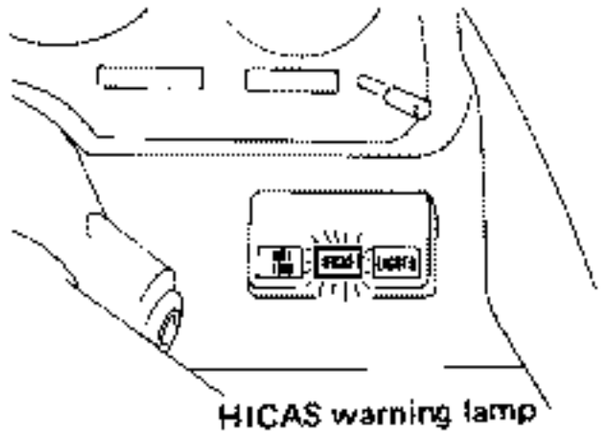
HICAS warning lamp

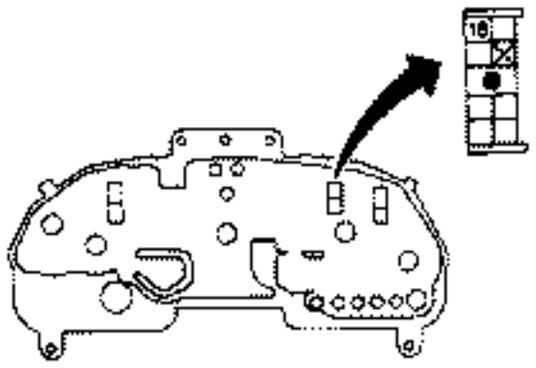

Vehicle speed sensor

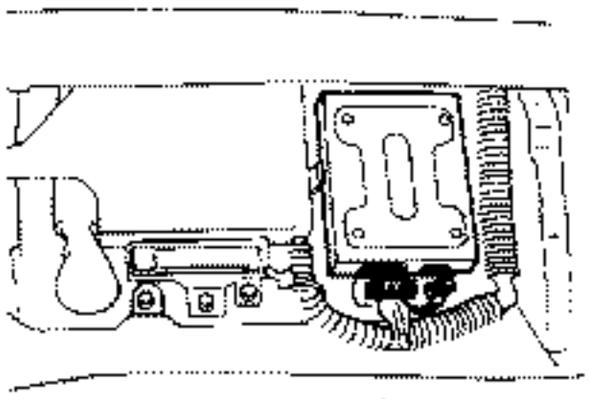
Control unit

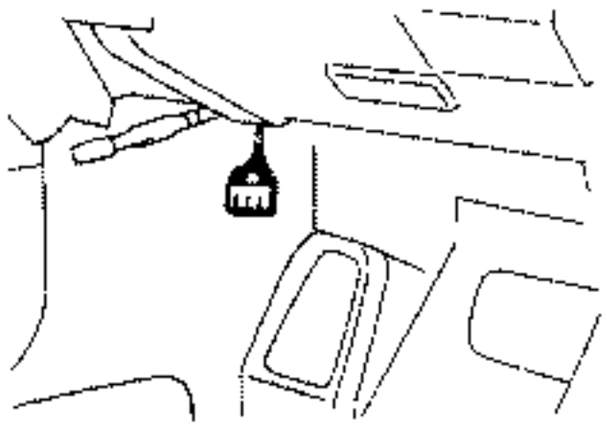
CONSULT connector

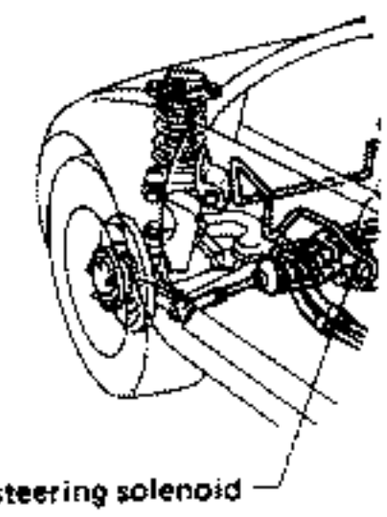
Power steering solenoid

Power cylinder

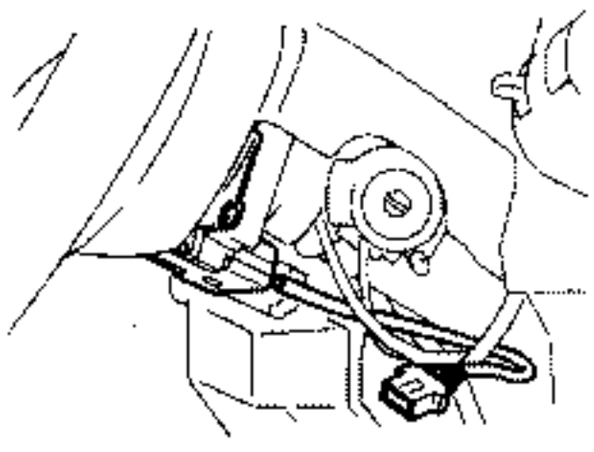
Steering angle sensor

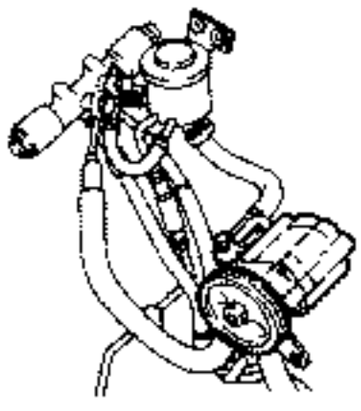
Oil pump

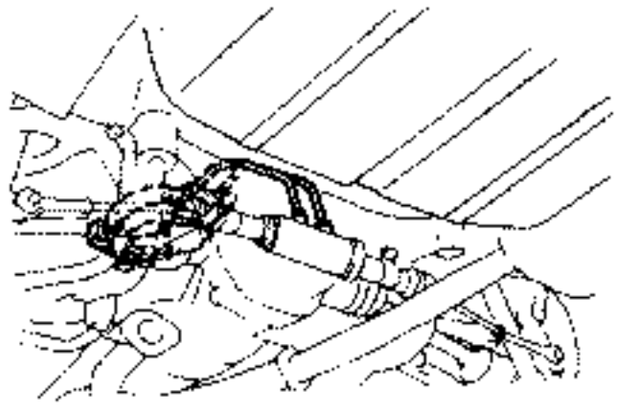
Fail-safe valve

SST615B

Circuit Diagram for Quick Pinpoint Check

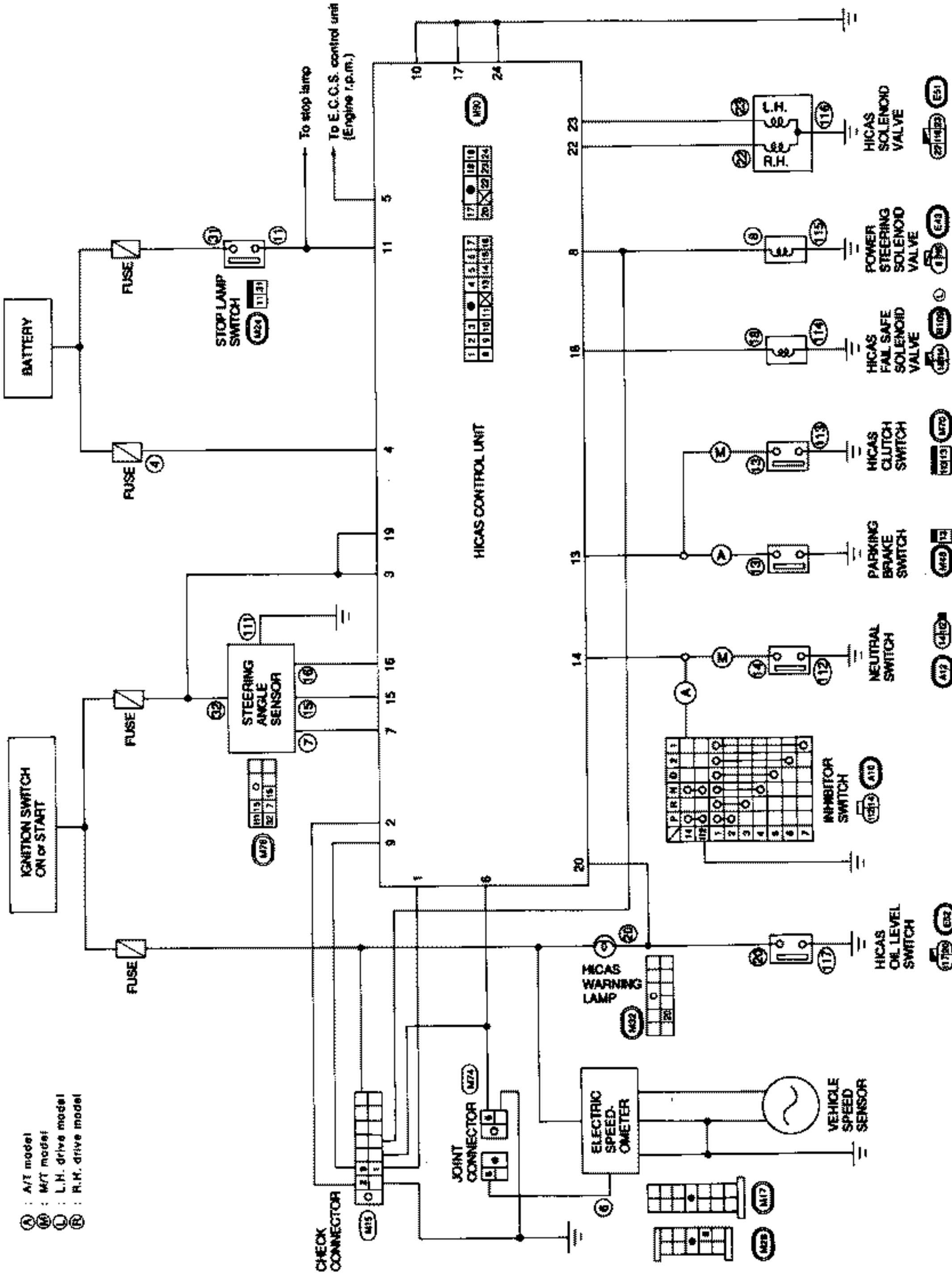

SST615B

Wiring Diagram

L.H.D. MODELS

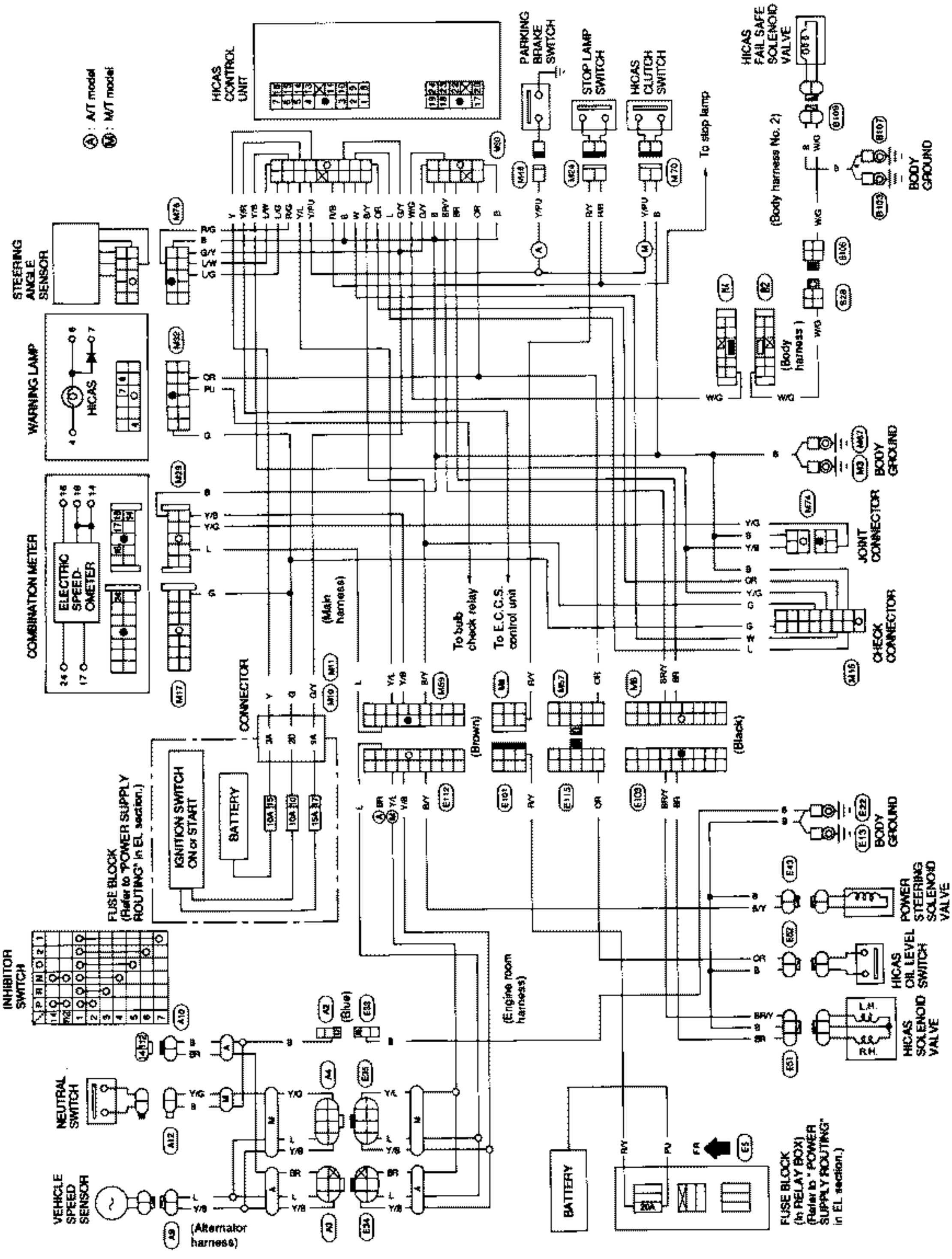

SST617B

Wiring Diagram (Cont'd)

R.H.D. MODELS

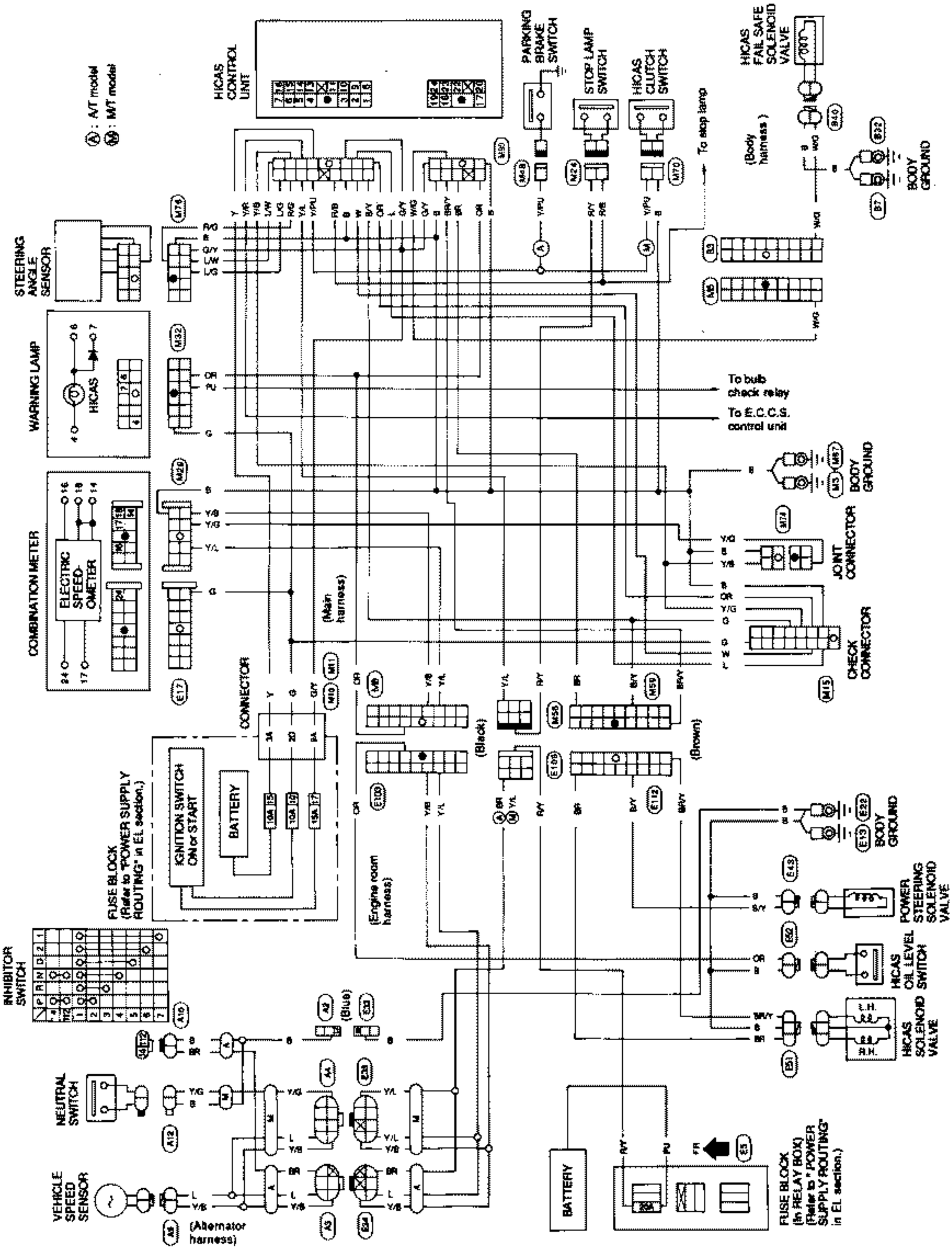

SST623B

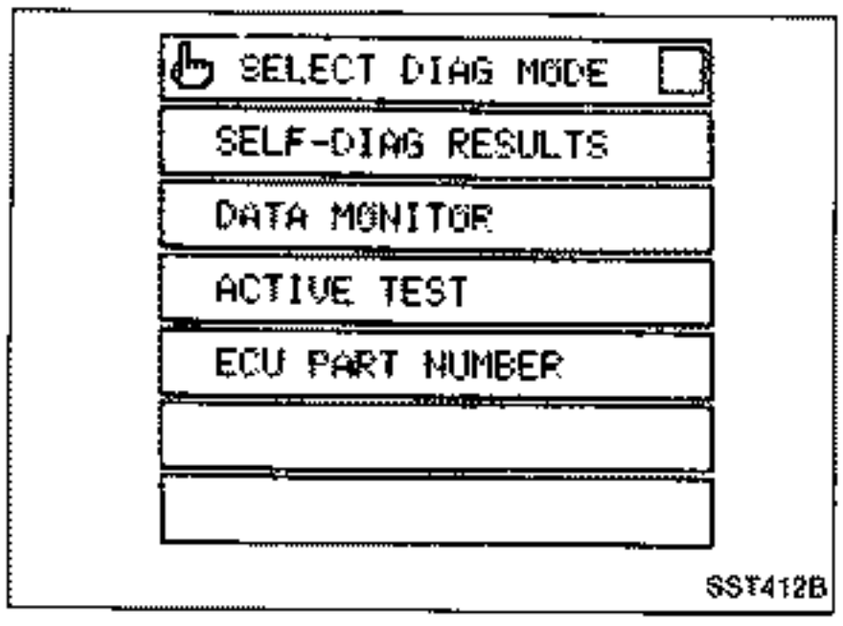

Self-diagnosis (When CONSULT is used)

- Start engine.
- Touch START (on CONSULT display).
- Touch HICAS.
- Touch SELF-DIAG RESULTS.

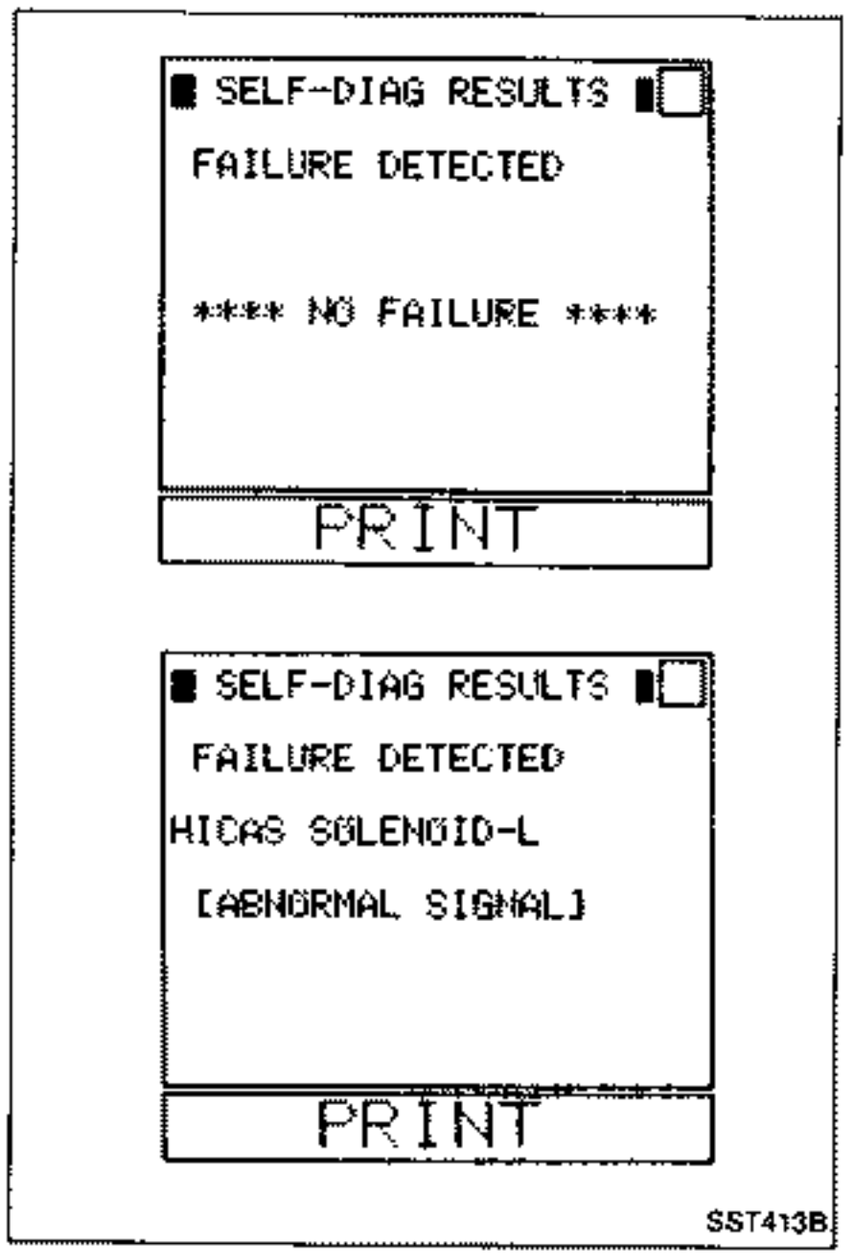

- Self-diagnostic results are shown on display. Refer to Table on page ST-71.

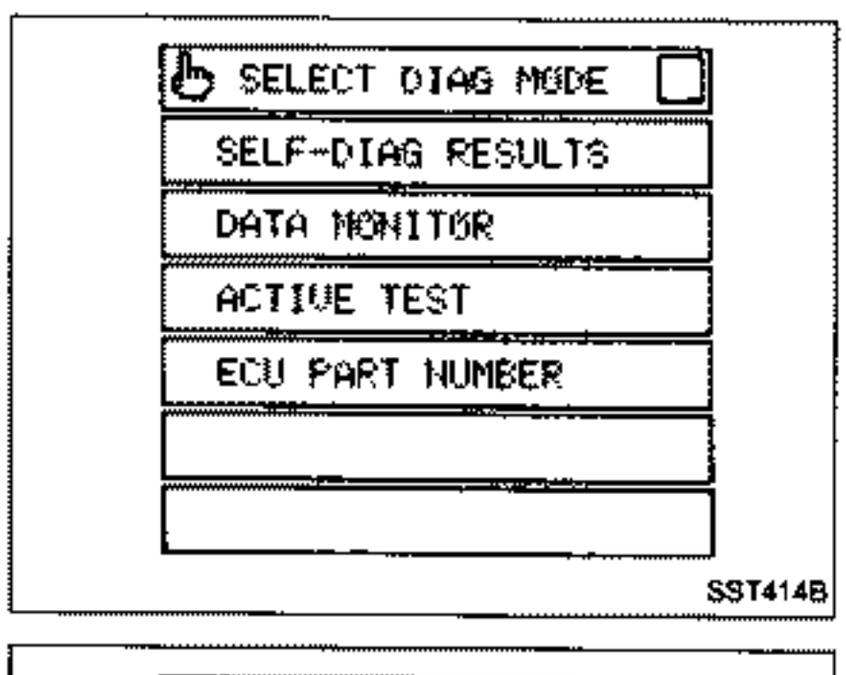

For reference:

Recording input/output signals using data monitor function

- Start engine.
- Touch START (on CONSULT display).
- Touch HICAS.
- Touch DATA MONITOR.

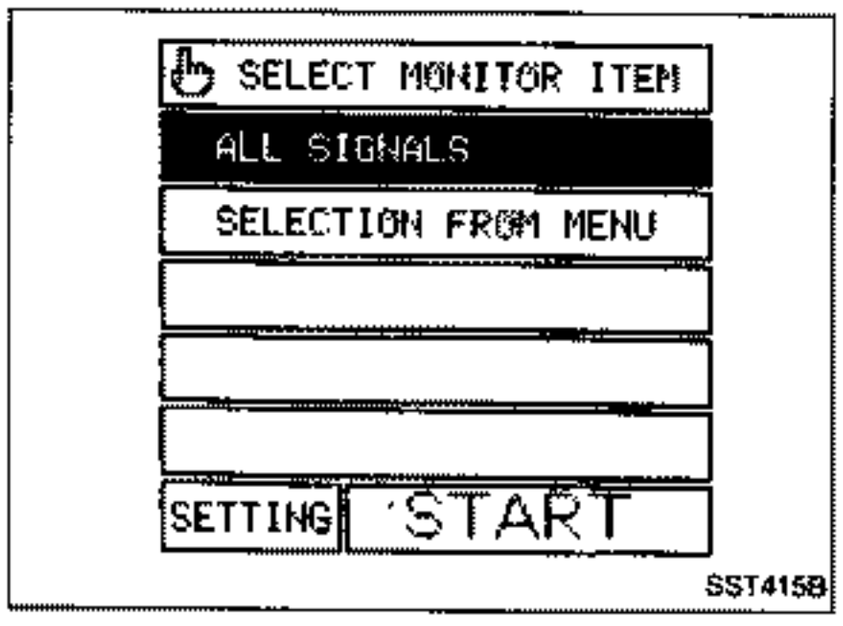

- Check to ensure that the ALL SIGNALS display is reversed. Touch START. Refer to Table on page ST-72.

Self-diagnosis (When CONSULT is used) (Cont'd)

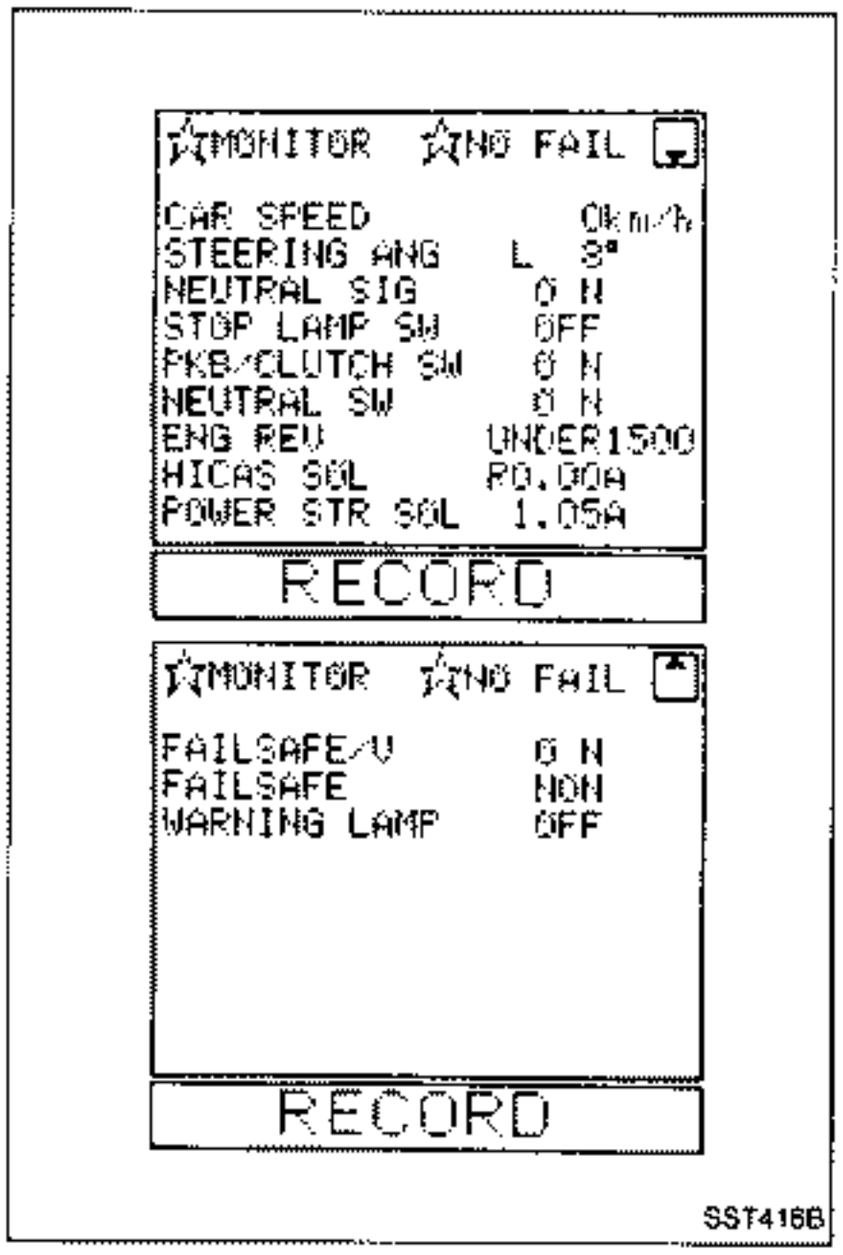

- Touch RECORD to record data.

Ensure that ON-OFF signal is produced when signal is entered from each sensor while monitoring.

To cancel data recording during operation, touch CANCEL.

Self-diagnosis items

Diagnostic item	Description	Remarks
****NO FAILURE****	• No failure has been detected.	
VEHICLE SPEED SENSOR [NO SIGNAL] (·a)	• No vehicle speed signal is entered after vehicle has been operated.	
VEHICLE SPEED SENSOR [SIG-SUDDEN TURN] (·b)	• Vehicle speed signal abruptly changes during operation.	
STEERING ANGLE SEN [NO ANG SIGNAL] (·a)	• Steering angle has not been changed while driving at a speed of at least 60 km/h (37 MPH).	
STEERING ANGLE SEN [NO NEUT SIGNAL] (·b)	• Neutral (ON) signal is not entered after vehicle has been driven.	
STEERING ANGLE SEN [NEUT SIG-360° OFF] (·c)	• Neutral (ON) signal is not entered even after steering wheel has been turned at least 360°.	
STEERING ANGLE SEN [NEUT SIG-30° ON] (·d)	• Neutral (ON) signal is continually shown at steering angle of at least 30°.	
FAILSAFE VALVE [ABNORMAL SIGNAL]	• Output terminal voltage is abnormal due to broken or shorted HICAS fail-safe valve circuit.	
HICAS SOLENOID-R [ABNORMAL SIGNAL]	• Output terminal voltage is abnormal due to broken or shorted HICAS solenoid valve (RH) circuit.	
HICAS SOLENOID-L [ABNORMAL SIGNAL]	• Output terminal voltage is abnormal due to broken or shorted HICAS solenoid valve (LH) circuit.	
POWER STEERING SOL [ABNORMAL SIGNAL]	• Output terminal voltage is abnormal due to broken or shorted power steering solenoid valve circuit.	

Self-diagnosis (When CONSULT is used) (Cont'd)

Data monitoring items

○: Standard
△: Optional selection

Item		Monitor item selection		Remarks
		All items	Item menu	
Vehicle speed sensor	(km/h)	○	△	—
Steering angle sensor	(deg)	○	△	Abnormal value is shown before straight-ahead position ("0") is set and after battery is disconnected and reconnected.
Neutral signal (ON-OFF display)		○	△	—
Stop lamp switch signal (ON-OFF display)		○	△	—
Parking brake/Clutch switch (ON-OFF display)		○	△	Clutch switch signal for M/T model and parking brake switch signal for A/T model.
Neutral switch (ON-OFF display)		○	△	Neutral switch signal for M/T model and inhibitor relay (N or P) signal for A/T model.
Engine rpm ("OVER 1,500" or "UNDER 1,500" is shown.)		○	△	Engine speed greater than/less than 1,500 rpm is shown.
HICAS solenoid valve (R/L) (A)		○	△	Controlled current flow from control unit to HICAS solenoid valve and direction of current control are shown.
Power steering solenoid valve (A)		○	△	Controlled current flow from control unit to power steering solenoid valve is shown.
Fail-safe valve (ON-OFF display)		○	△	ON (when connected) or OFF (when disconnected) is shown.
Fail-safe system (CUT-NON display)		○	△	NON (fail-safe valve ON) referring to "normal" conditioner CUT (fail-safe valve OFF) when in "fail-safe" condition are shown.
Warning lamp (ON-OFF display)		○	△	Illumination control of control unit's HICAS warning lamp is shown.
■ Voltage	(V)	—	△	Voltage measured with voltage probes is shown.
■ Pulse (ms, Hz or)		—	△	Value measured with pulse probes is shown. If pulse cannot be measured, "#" is down. "#" is also shown at left of final data until measurement results are determined.

Self-diagnosis (When CONSULT is not used)

SELF-DIAGNOSIS PROCEDURES

1. Input starting conditions for self-diagnosis.
(1) Turn ignition switch "OFF".
(2) Set shift lever to "P" or "N" position (A/T model), or "Neutral" position (M/T model).
(3) Turn ignition switch "ON".
(4) Immediately start engine.
(5) Turn steering wheel from left to right (at least 20° from the neutral position) 5 times or more, then depress foot brake pedal at least 5 times all within 10 seconds after ignition switch has been turned "ON".
2. Input self-diagnosis item.
(1) Depress and release foot brake pedal.
(2) Turn steering wheel from left to right (at least 20°) from the neutral position.
(3) (M/T model)
Depress clutch pedal and move gear shift lever to any position other than Neutral and return to Neutral. Release clutch pedal.
(A/T model)
Disengage and engage parking brake lever. Move shift lever to any position other than Neutral or Parking and return to Parking.
(4) Move car at least 3 meters (10 ft) forward and proceed at an indicated speed of at least 2 km/h (1 MPH) in self-diagnosis mode.

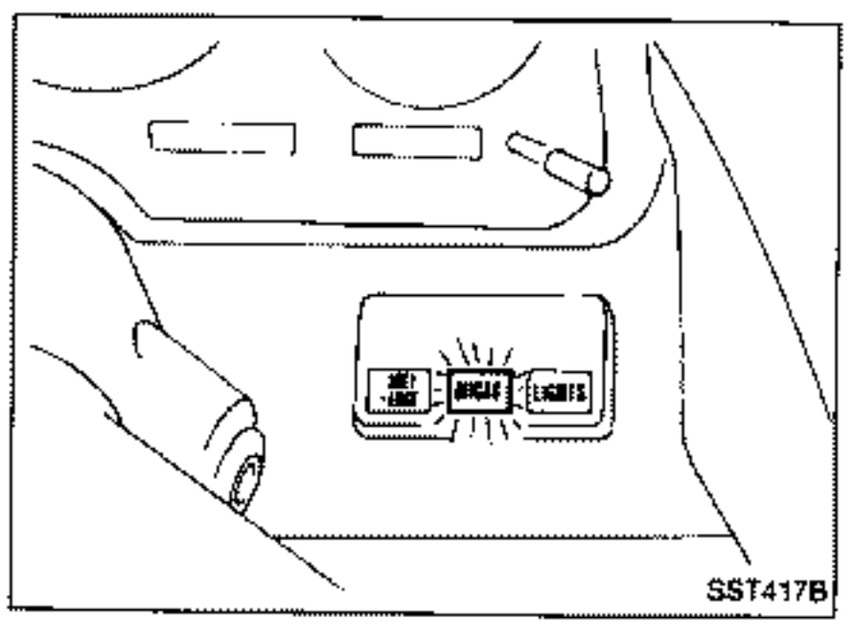

3. The self-diagnosis mode will then appear in the "HICAS" warning lamp.

When all systems are normal:

HICAS warning lamp flashes at 0.25-second intervals.

Self-diagnosis (When CONSULT is not used) (Cont'd)

When there is a system malfunction:

Example: When ② HICAS solenoid valve LH, ④ power steering solenoid valve and ⑤ vehicle speed sensor have experienced a malfunction.

The warning lamp displays abnormal mode (1 sec. ON).

A If fail-safe system was operated (fail-safe valve is operating) when ignition switch was turned OFF for the last time, fail-safe items will be displayed in numerical order in modes indicated. After all items are displayed, display is repeated again.

- **To change the display mode to A, turn OFF ignition switch after mode B is displayed.**
- **When battery charge is insufficient, mode B is displayed.**

A

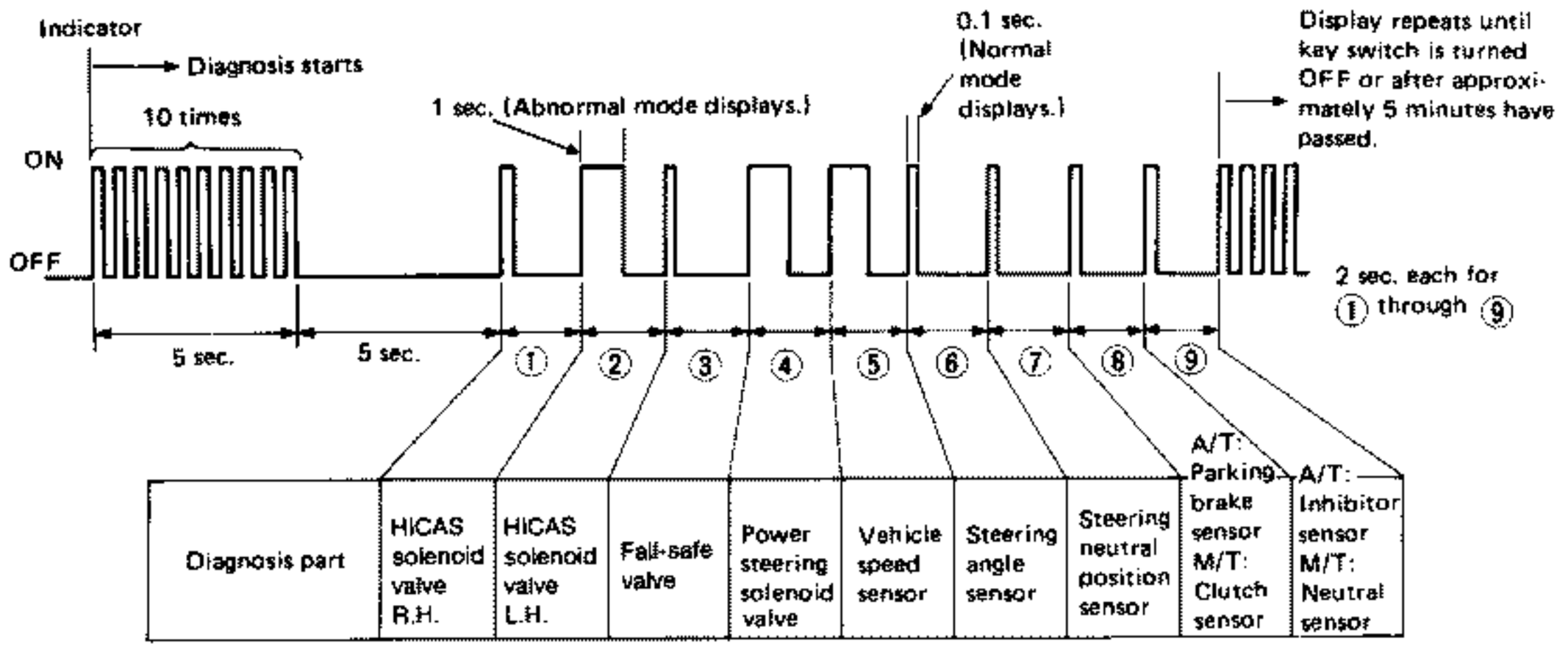

SST418B

Self-diagnosis (When CONSULT is not used) (Cont'd)

B If fail-safe system was not operated when ignition switch was turned OFF for the last time, display will show self-diagnosis results in numerical sequence in modes indicated below. After all self-diagnosis results are shown, display is repeated again.

B

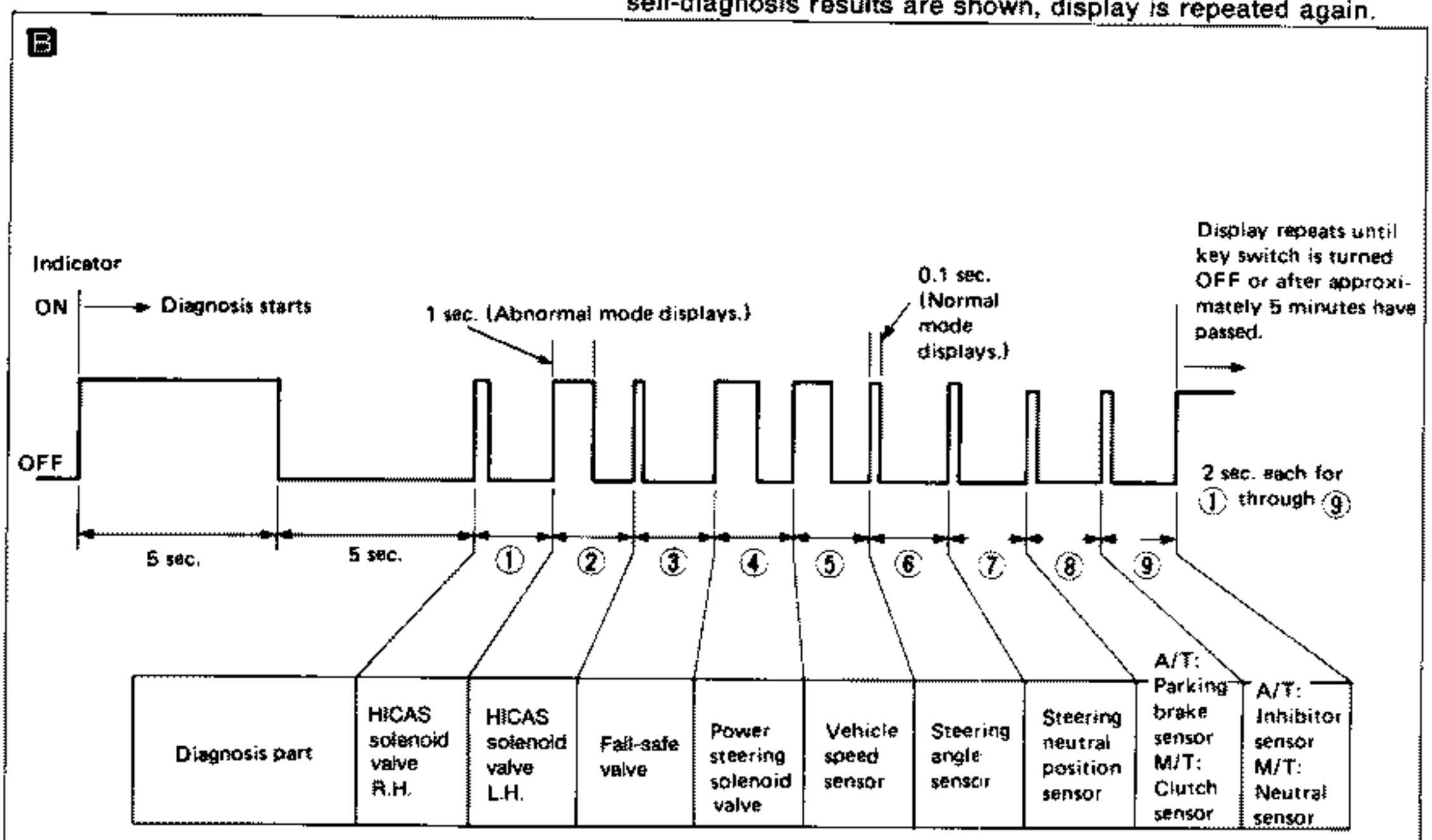

SST419B

CANCELING THE SELF-DIAGNOSIS FUNCTION

There are three methods for canceling the self-diagnosis function, as described below:

- The self-diagnosis system is canceled by the turning ignition switch "OFF".
- After self-diagnosing has been operated for approximately 5 minutes, the self-diagnosis system will be automatically canceled.
- The self-diagnosis system is canceled by a vehicle speed of 30 km/h (19 MPH) or over.

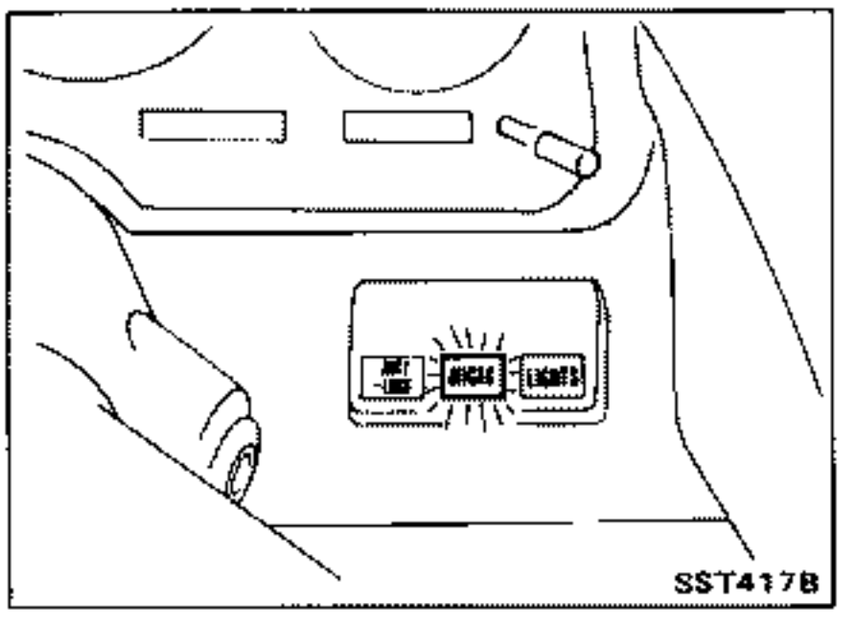

Diagnostic Procedure 1

SYMPTOM:

No warning lamp comes on when ignition switch is turned "ON".

START

A

CHECK WARNING LAMP POWER SUPPLY.
1) Turn ignition switch "ON".
2) Measure voltage across warning lamp connector terminal ⑳ and ground.
Voltage:
Approximately 12V

N.G. → Check and repair wiring.

O.K. ↓

Replace warning lamp.

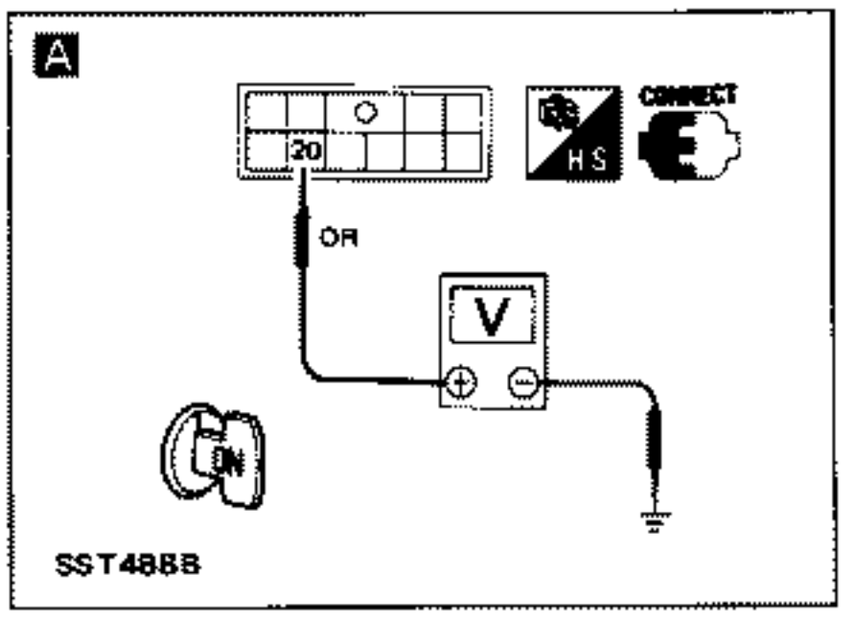

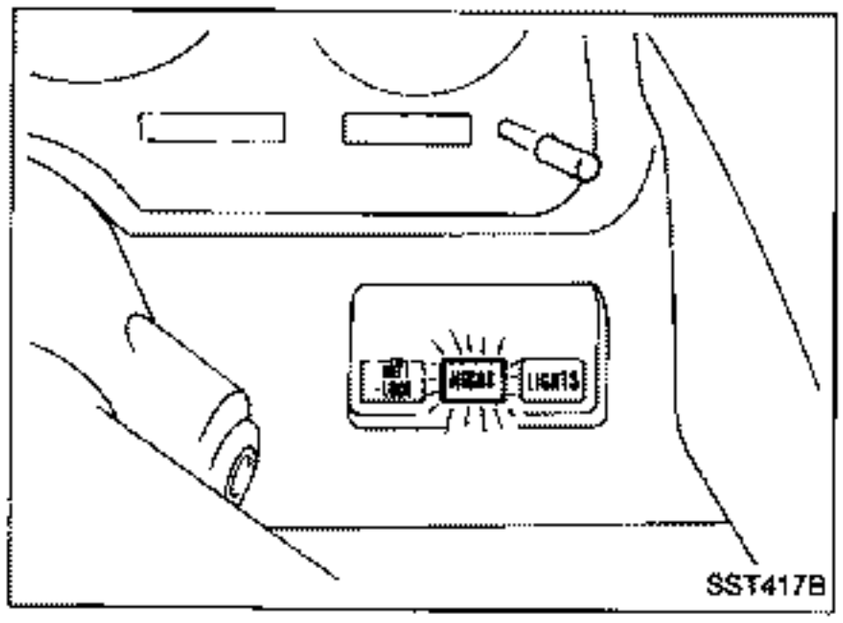

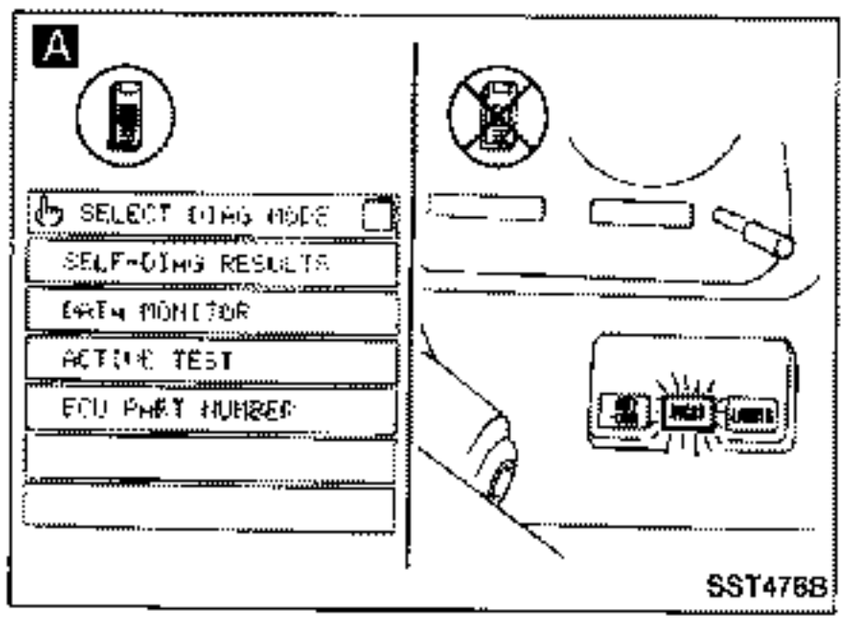

Diagnostic Procedure 2

SYMPTOM (A):
Warning lamp comes on during operation.

START

A

Check in self-diagnosis mode.
Refer to page ST-70.

Repair malfunctioning part detected by self-diagnosis.
Refer to Diagnostic Procedures 5 to 12.

O.K. → END

N.G.

Check connectors for improper contact.

O.K. → END

N.G.

Check steering neutral position.
Refer to page ST-59.

Diagnostic Procedure 2 (Cont'd)

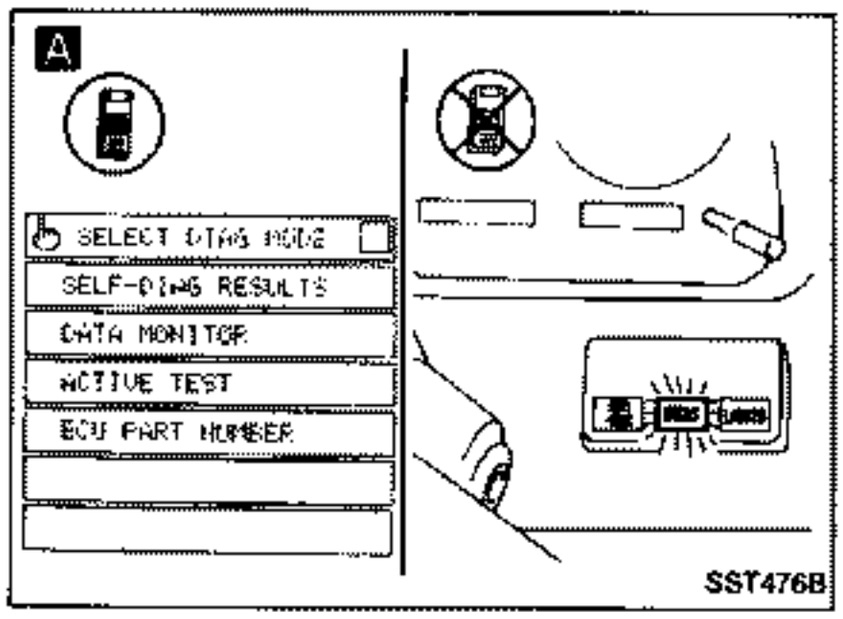

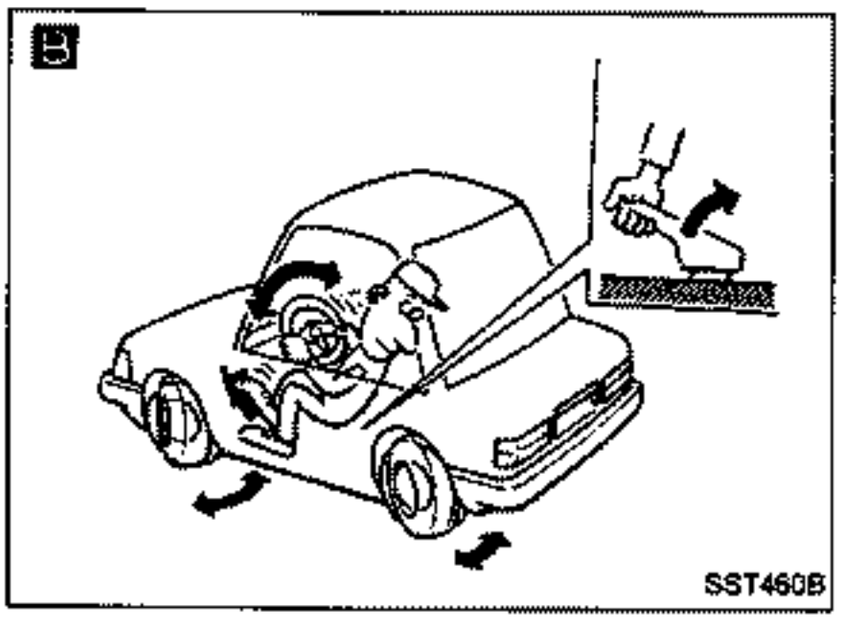

SYMPTOM (B):
Warning lamp comes on when ignition switch is turned ON; however, it does not go out after engine start.

START

A

Check in self-diagnosis mode.
Refer to page ST-70.

O.K. → No engine rpm signal is entered. → Ⓐ

N.G. → Repair malfunctioning part detected by self-diagnosis.
Refer to Diagnostic Procedures 5 to 12. → Ⓐ

Warning lamp remains ON

B

Check rear wheel action.
Left and right rear wheels are turned in response to rotation of steering wheel.
Refer to page ST-64.

No → No power is supplied to control unit.

Yes

Insufficient oil quantity.

Replace fluid level sensor (on reservoir tank) if warning lamp remains on during engine operation. ← Ⓐ

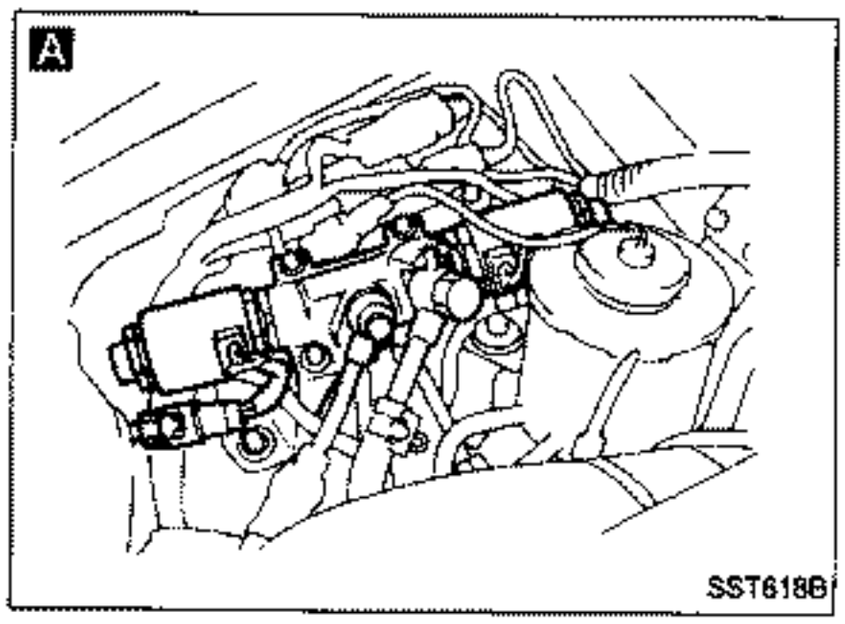

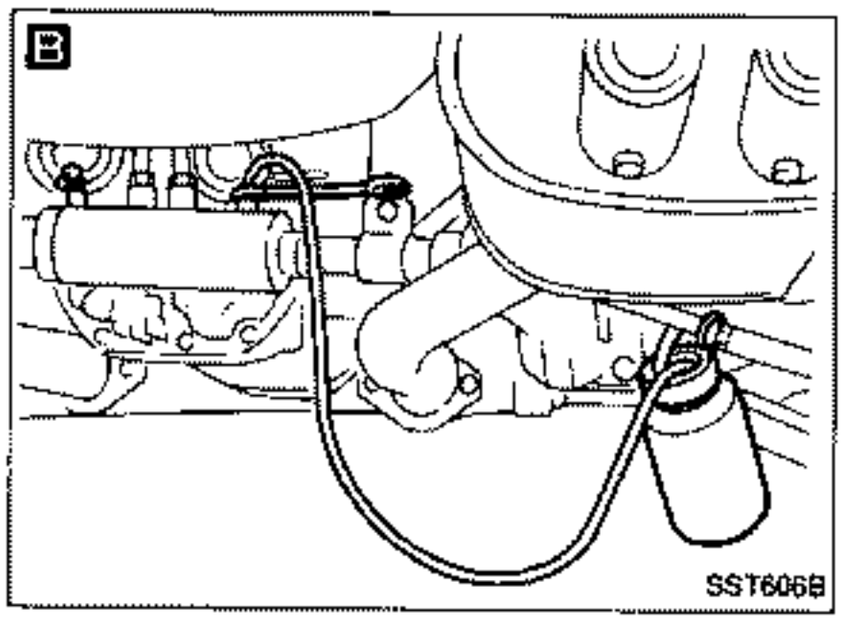

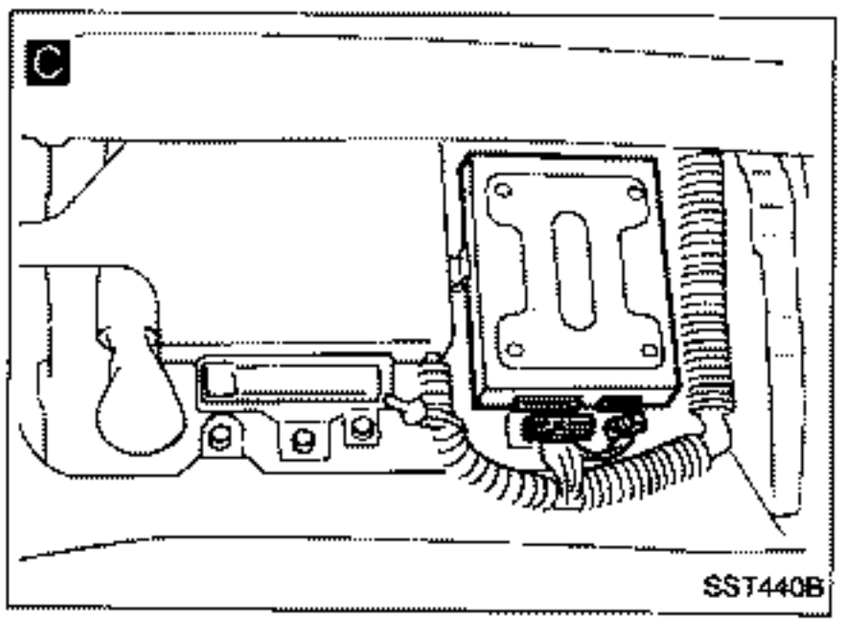

Diagnostic Procedure 3

SYMPTOM:
Abnormal noise occurs.

START

A

Disconnect HICAS solenoid valve connector and check noise for changes.

Yes → Noise stops.

No

Noise occurs in any system other than HICAS.

Locate and repair.

Noise stops.

B

Bleed air from hydraulic system. Refer to page ST-49.

N.G. → C

O.K. → END

C

Replace control unit.

N.G.

Replace HICAS solenoid valve.

O.K. → END

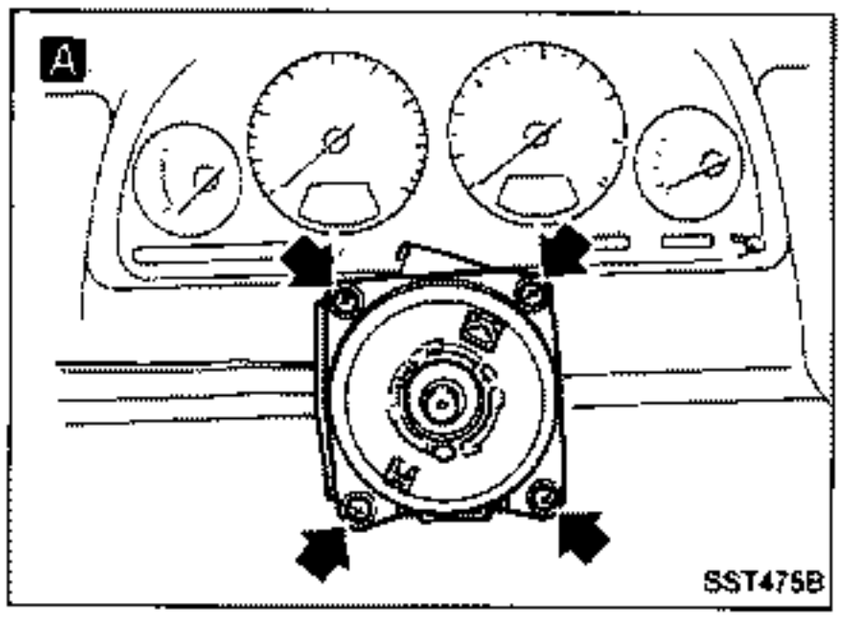

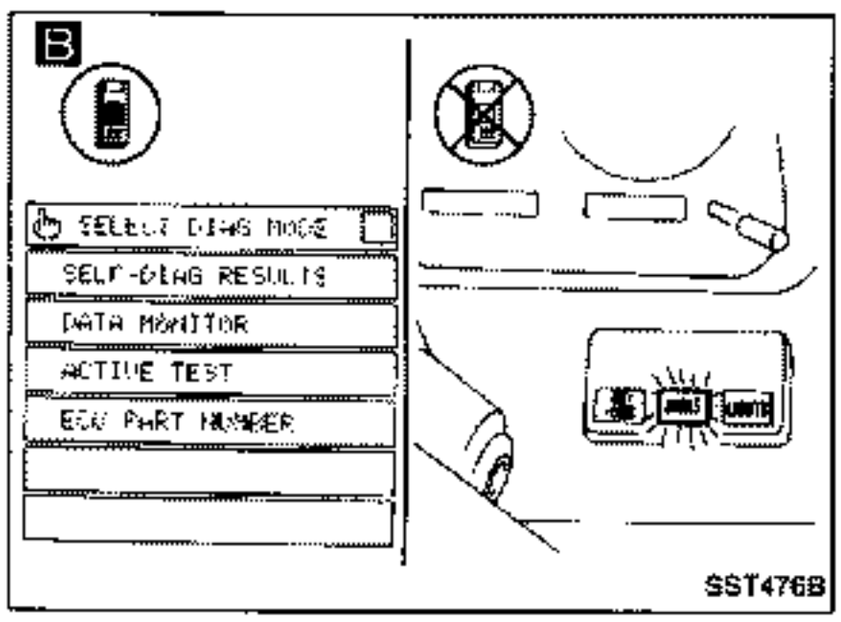

Diagnostic Procedure 4

SYMPTOM:
Vehicle behavior is abnormal. (Vehicle sways or jerks.)

START

A

Check steering wheel neutral position for misalignment and steering angle sensors for looseness.
Refer to page ST-59.

O.K. → END

N.G.

B

Check in self-diagnosis mode.
Refer to page ST-70.

N.G. → Repair malfunctioning system detected by self-diagnosis.
Refer to Diagnostic Procedures 5 to 12.

O.K.

Check static HICAS characteristic performance.
Refer to flow chart A on page ST-81.

Check dynamic HICAS characteristic performance.
Refer to flow chart B on page ST-84.

Diagnostic Procedure 4 (Cont'd)

A. Static HICAS characteristic performance check

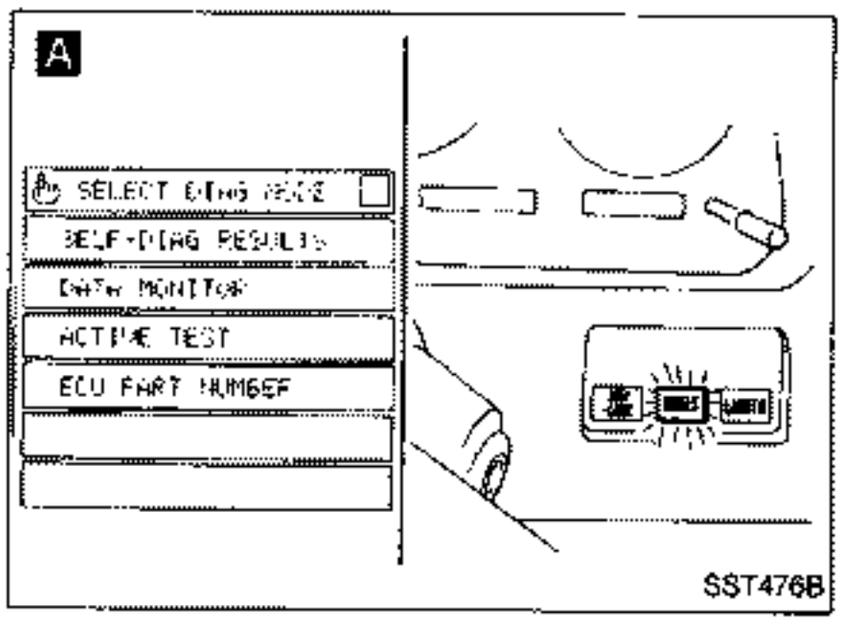

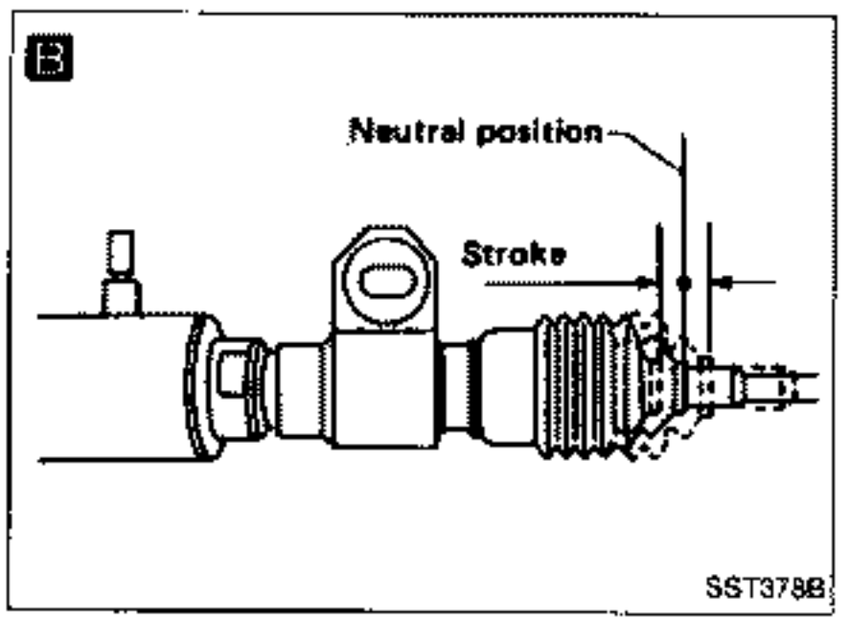

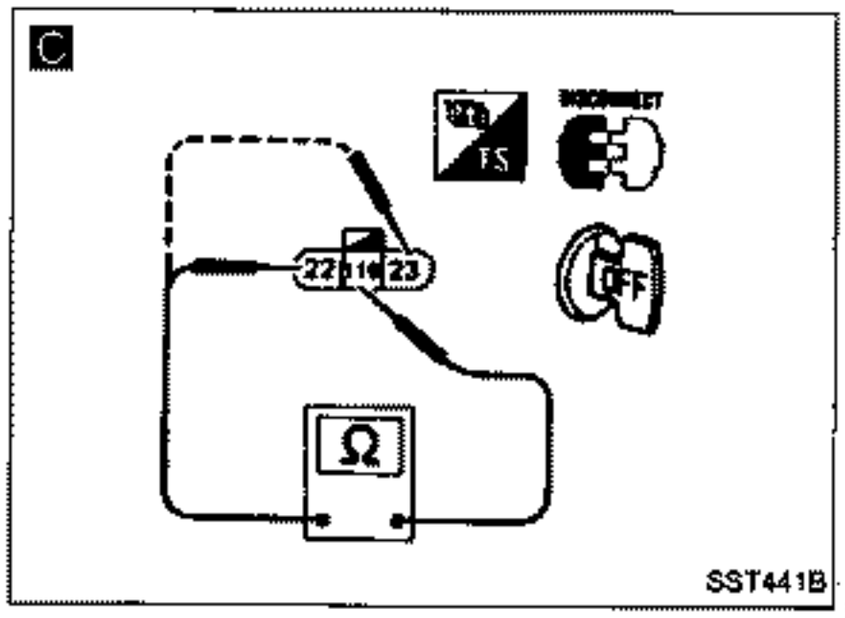

START

A

Set CONSULT in ACTIVE TEST mode.

OR

Set self-diagnosis mode.

Refer to page ST-70.

B

- Run engine at a speed of less than 2,000 rpm.
- Turn steering wheel approximately 180° to the left or right.

CHECK POWER CYLINDER STROKES.

Each stroke from neutral position:

2.1 - 3.1 mm

(0.083 - 0.122 in)

Refer to page ST-46.

O.K. → END

N.G. ↓

C

CHECK RESISTANCE OF HICAS SOLENOID VALVE.

Stop engine and disconnect HICAS solenoid valve.

Measure resistance between HICAS solenoid valve connector terminals (22) and (23), and (116).

Resistance

4 - 6Ω

N.G. → Replace HICAS solenoid valve. → (B)

O.K. ↓

(A)

Diagnostic Procedure 4 (Cont'd)

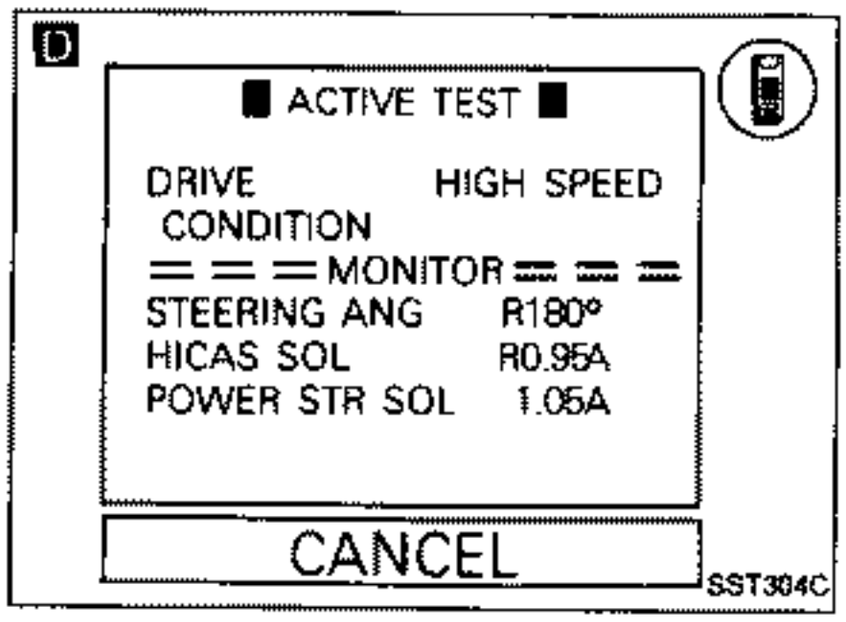

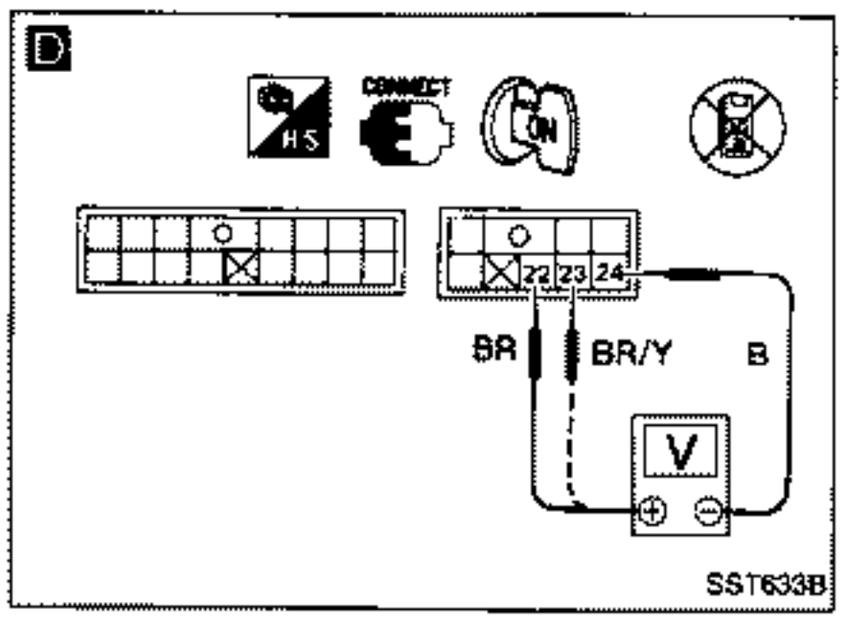

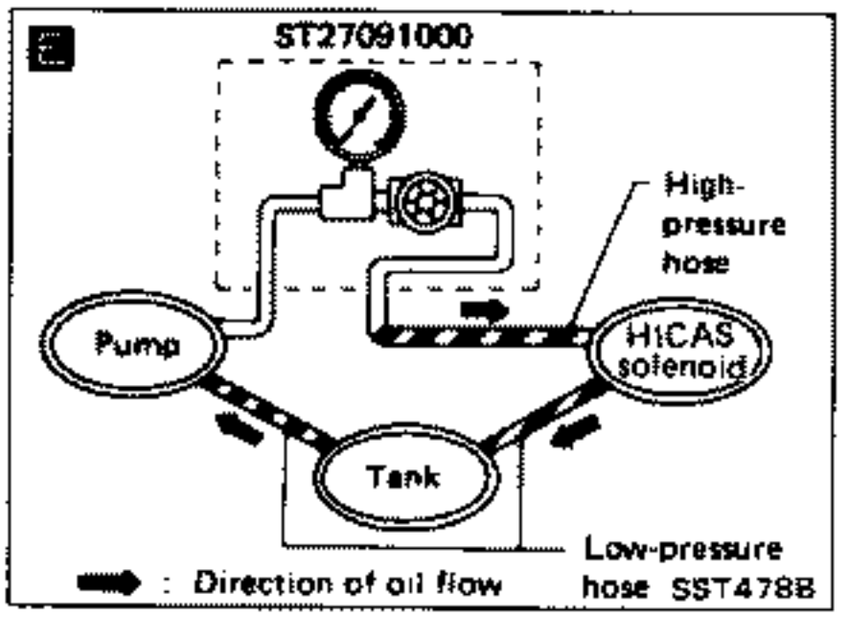

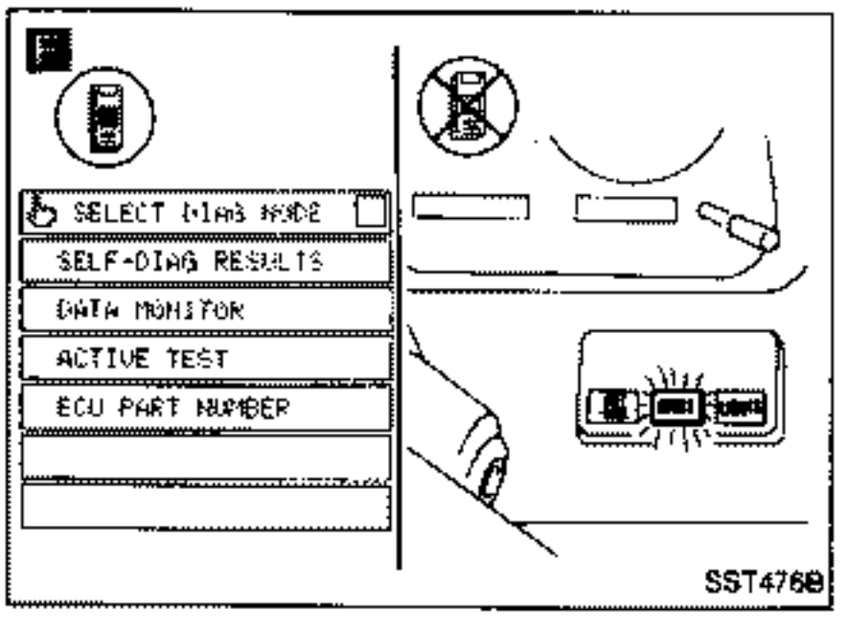

D

CHECK CONTROL UNIT OUTPUT VOLTAGE. N.G. → Replace control unit.

Set CONSULT in ACTIVE TEST mode.

HICAS solenoid valve output amperes:
0.9 - 1.0A

OR

Set self-diagnosis mode.

- Run engine at a speed of more than 2,000 rpm.
- Turn steering wheel approximately 180°.
- Measure voltage across control unit connector terminals ㉒ and ㉓, ㉔.

Output voltage:
More than 3.6V

O.K.

E

CHECK HICAS OIL PUMP RELIEF PRESSURE. N.G. → Replace oil pump.

- Cancel self-diagnosis mode.
- Check HICAS oil pump relief pressure with engine running at a speed of more than 2,000 rpm.

Relief pressure:
More than 5,884 kPa (58.8 bar, 60 kg/cm², 853 psi)

O.K.

F

CHECK OIL PRESSURE AT FAIL-SAFE VALVE.

Set CONSULT in ACTIVE TEST mode.

OR

Set self-diagnosis mode.

Ⓒ

Diagnostic Procedure 4 (Cont'd)

G

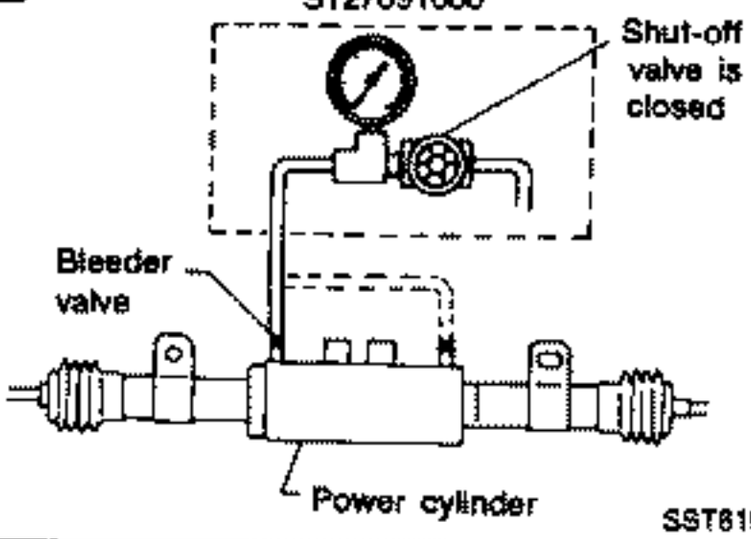

H

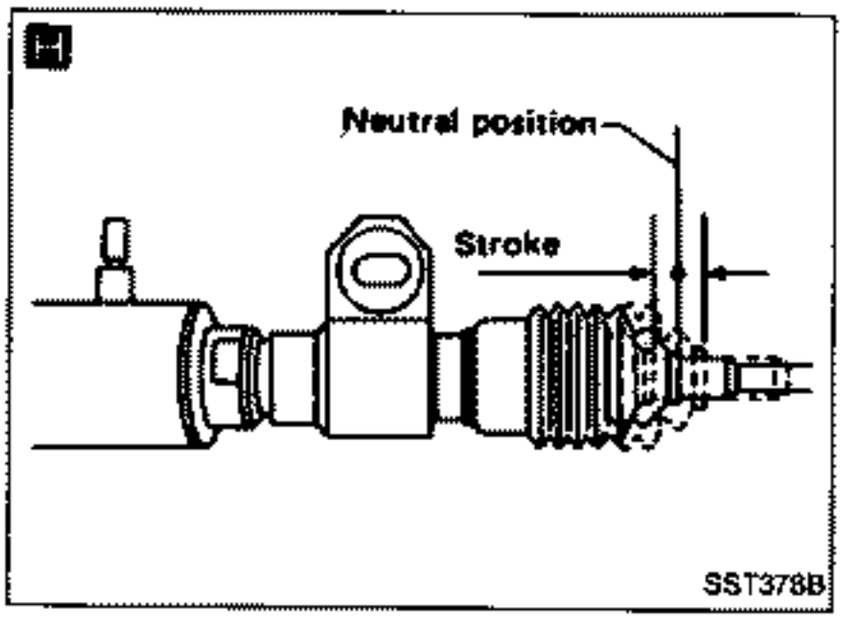

Ⓒ

G

- Run engine at a speed of more than 2,000 rpm and turn steering wheel approximately 180° to the left and right.
- Check oil pressure at bleeder valve of power cylinder.

  Oil pressure:

  More than 3,923 kPa (39.2 bar, 40 kg/cm², 569 psi)

N.G. → Replace HICAS solenoid valve.

H

CHECK POWER CYLINDER STROKE.

Each stroke from neutral position:

2.1 - 3.1 mm (0.083 - 0.122 in)

Refer to page ST-46.

N.G. → Replace fail-safe valve.

O.K. → Ⓑ

O.K. → Replace power cylinder.

Diagnostic Procedure 4 (Cont'd)

B. Dynamic HICAS characteristic performance check

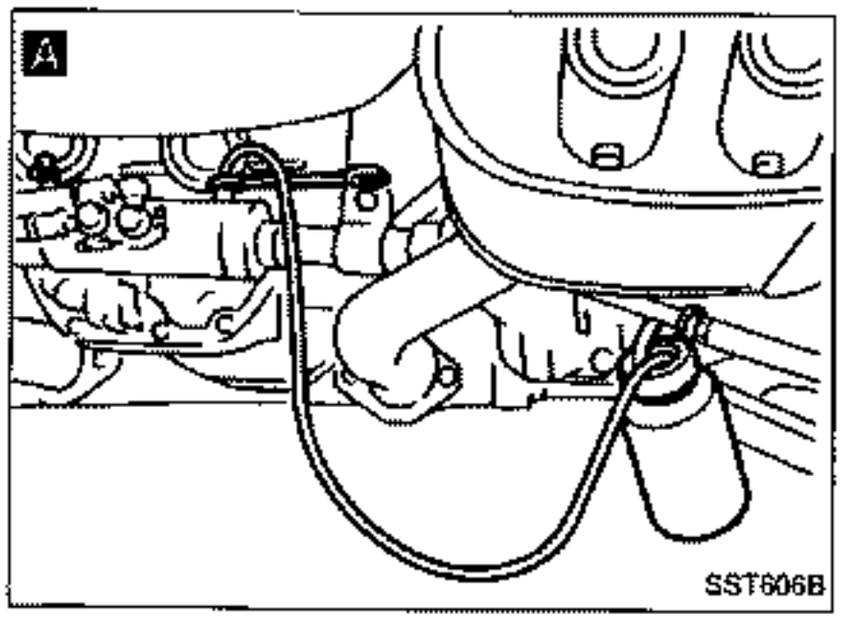

START

A

CHECK PIPING AND CONNECTIONS. ALSO BLEED AIR FROM HYDRAULIC SYSTEM.

- Replace piping or connectors which are found to be damaged.
- Bleed air from hydraulic system.

Refer to page ST-49.

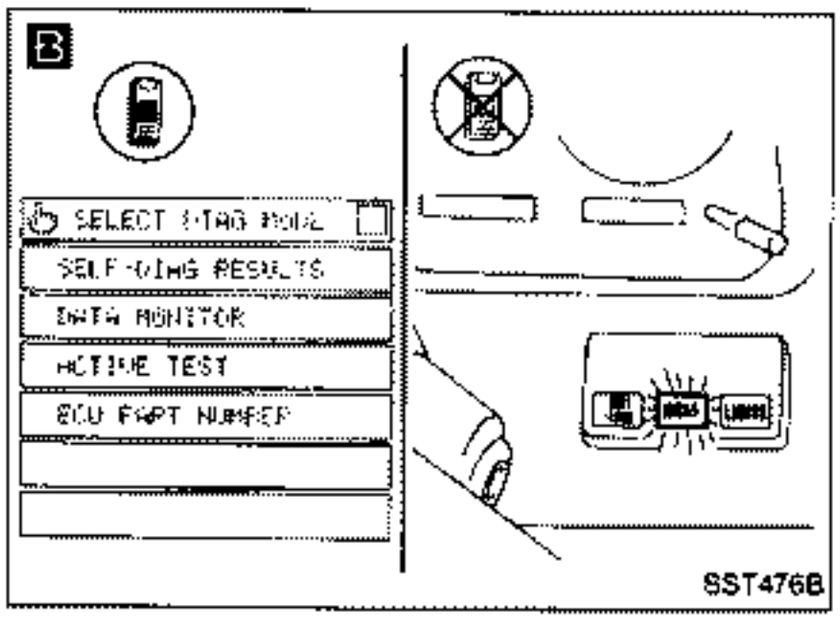

B

Set CONSULT in ACTIVE TEST mode.

OR

Set in self-diagnosis mode.

Refer to page ST-70.

Run engine at a speed of more than 2,000 rpm.

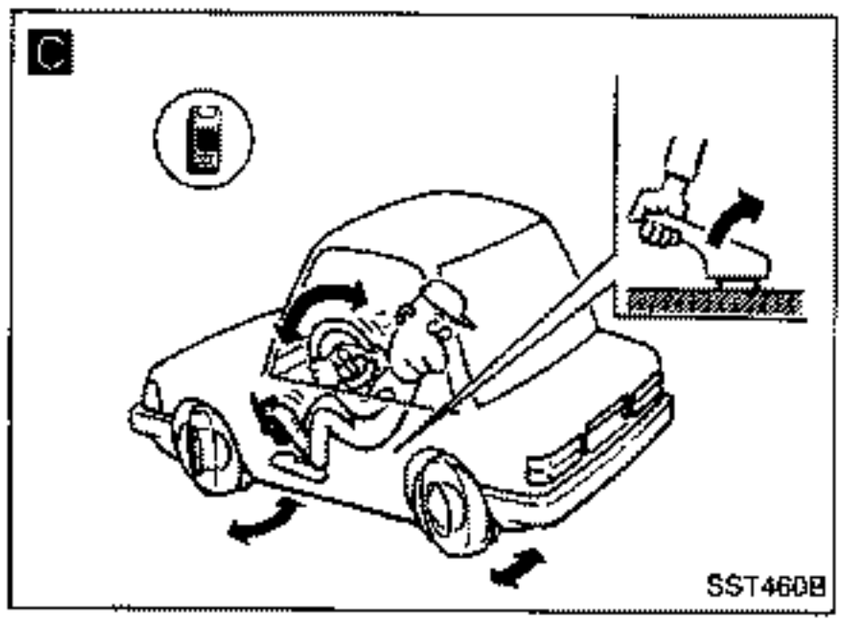

C

CHECK REAR WHEELS FOR PROPER MOVEMENT.

Ensure that rear wheel turns to the left or right when steering wheel is turned to the left or right.

OR

Ensure that rear wheels intermittently turn to the left and right when steering wheel is set to the neutral position.

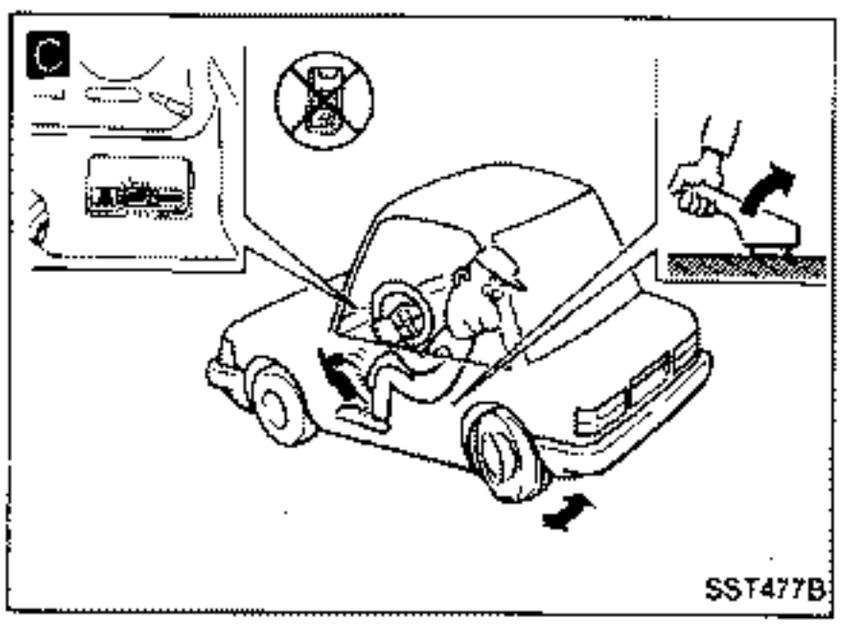

D

CHECK POWER CYLINDER STROKES.

Each stroke from neutral position:

More than 1.6 mm (0.063 in)

O.K. → END

N.G. → Ⓐ

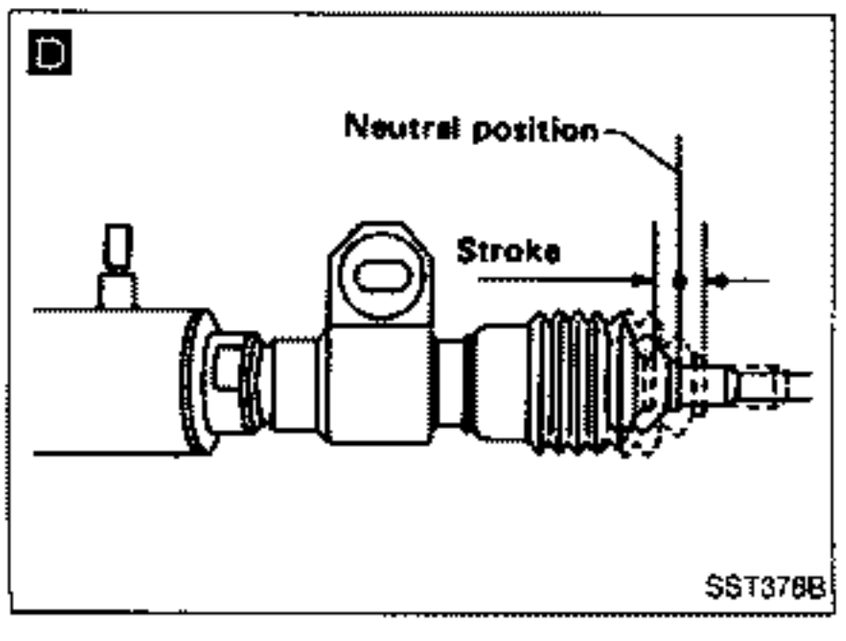

Diagnostic Procedure 4 (Cont'd)

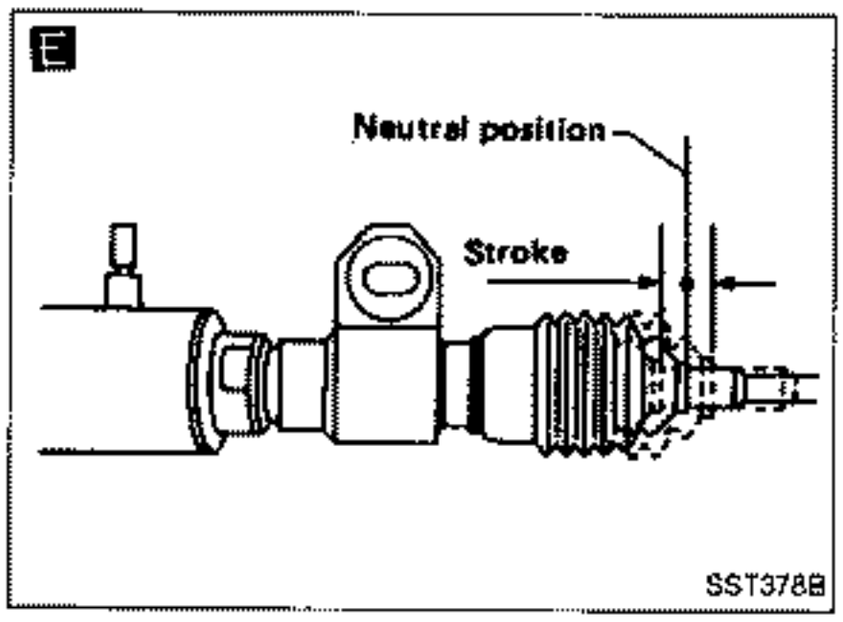

(A)

Replace HICAS solenoid valve.

CHECK POWER CYLINDER STROKE.

- After replacing HICAS solenoid valve, check power cylinder stroke.

Each stroke from neutral position:

More than 1.6 mm (0.063 in)

O.K. → END

N.G.

Replace power cylinder.

A

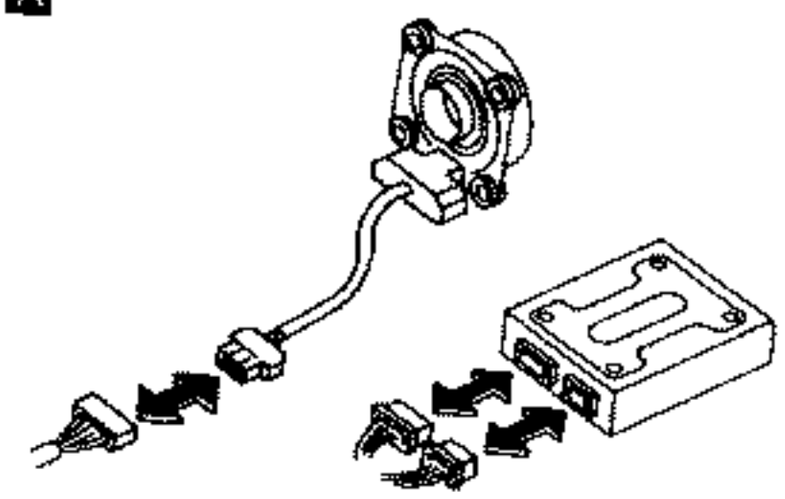

SST446B

B
C

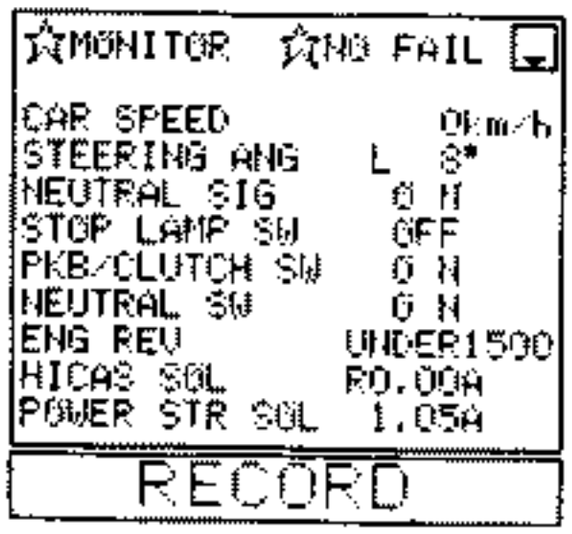

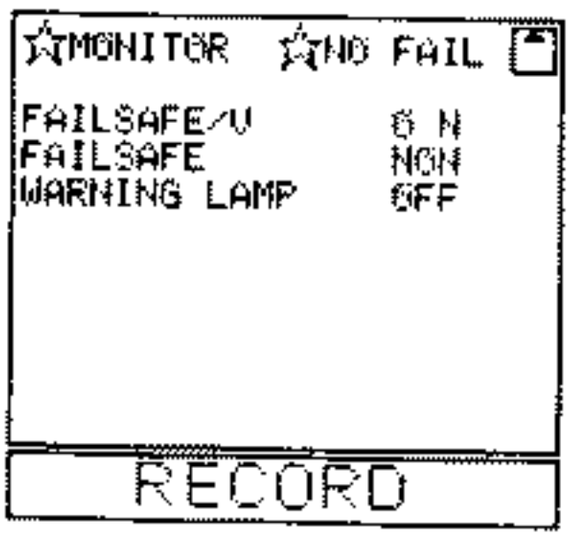

SST446B

B

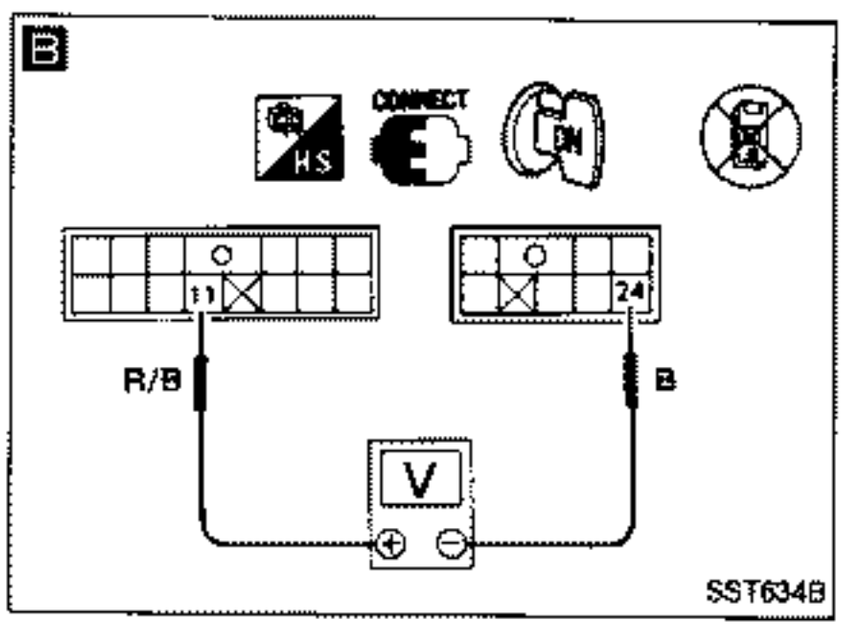

SST634B

C

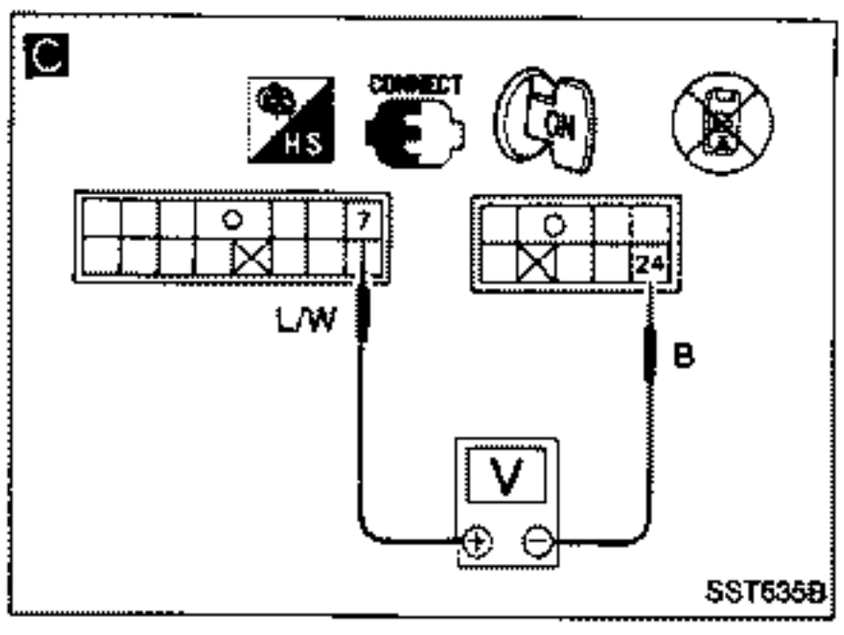

SST635B

Diagnostic Procedure 5

SYMPTOM:
System is not set in self-diagnosis mode.

START

A

CHECK CONNECTOR CONTINUITY.
Disconnect steering angle sensor connector and control unit connector, and reconnect them firmly. Conduct self-diagnosis.

O.K. → Poor connector connection

N.G.

B

CHECK STOP LAMP INPUT SIGNAL.
Set CONSULT in DATA MONITOR mode.
ON-OFF display
OR
Check that stop lamp input is present at control unit connector terminals ⑪ and ㉔.
Brake ON:
Approximately 12V
Brake OFF:
0V

N.G. → Malfunctioning stop lamp switch system

O.K.

C

CHECK STEERING NEUTRAL POSITION SENSOR INPUT SIGNAL.
Set CONSULT in DATA MONITOR mode.
ON-OFF display
OR
Check that steering neutral input is present at control unit connector terminals ⑦ and ㉔ when steering wheel is turned to the left and right at least 20° from the neutral position.
Neutral position:
Approximately 5V
When turned at least 20°:
0V

O.K. → Replace control unit.

N.G.

Ⓐ

Diagnostic Procedure 5 (Cont'd)

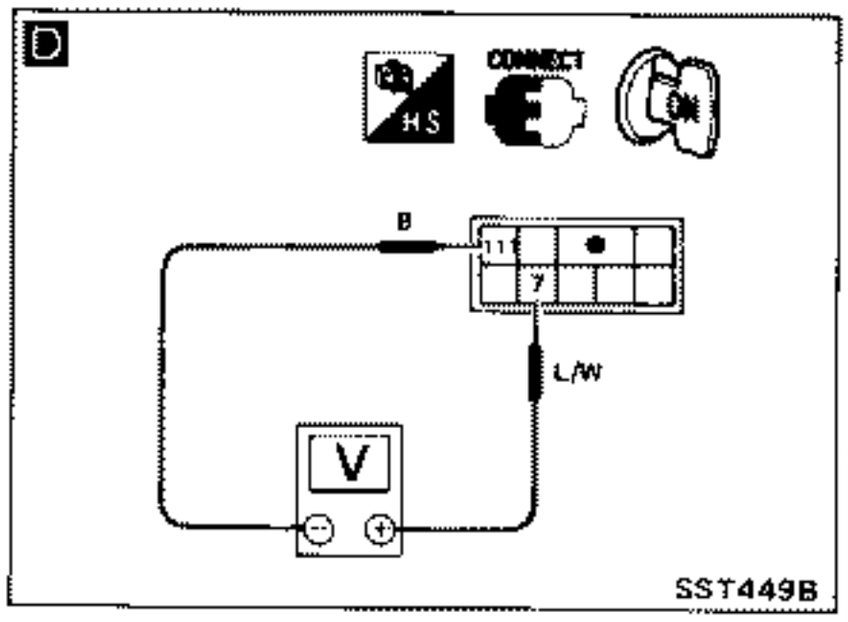

D

(A)

CHECK STEERING NEUTRAL POSITION SENSOR OUTPUT SIGNAL.
Check that steering neutral output is present at steering angle sensor connector terminals (7) and (11) when steering wheel is turned to the left and right at least 20° from the neutral position.
Neutral position:
Approximately 5V
When turned at least 20°:
0V

O.K. → Repair or replace harness between control unit and steering angle sensor.

N.G.

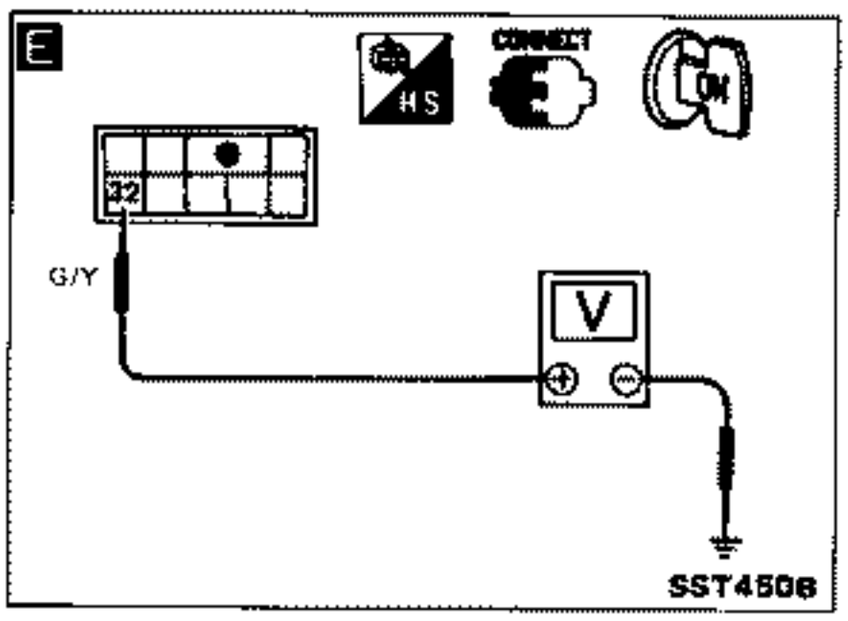

E CHECK STEERING ANGLE SENSOR POWER SUPPLY.
1) Turn ignition switch "ON".
2) Measure voltage across steering angle sensor connector terminal (32) and ground.
Voltage:
Approximately 12V

O.K. → Replace steering angle sensor.

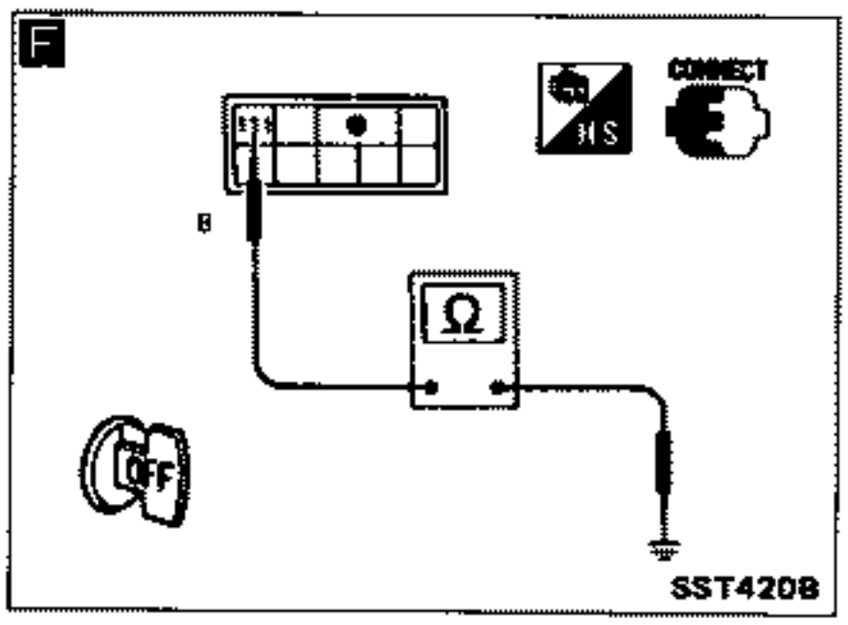

F CHECK STEERING ANGLE SENSOR GROUND CIRCUIT.
Check continuity between steering angle sensor connector terminal (11) and ground.
Continuity should exist.

N.G.

Check and repair power supply harness or ground harness.

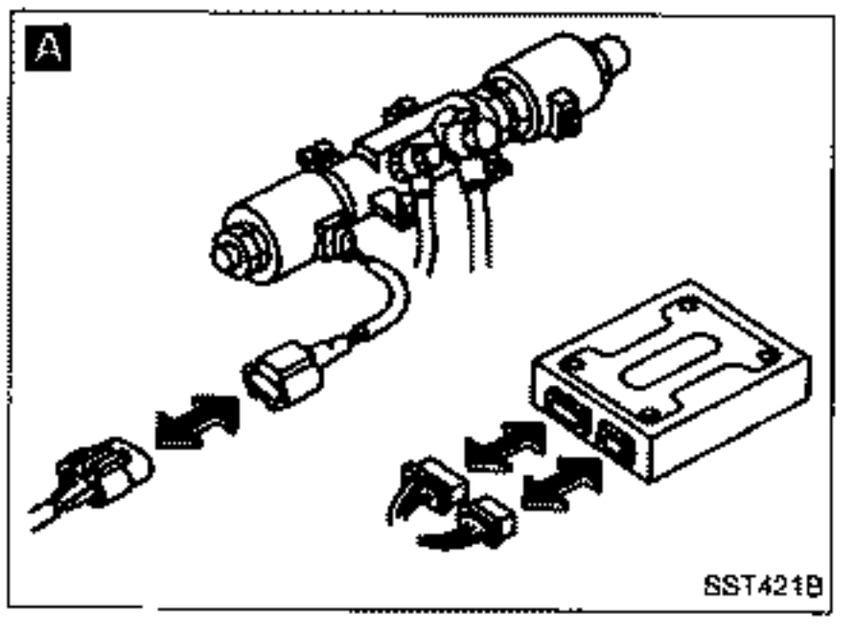

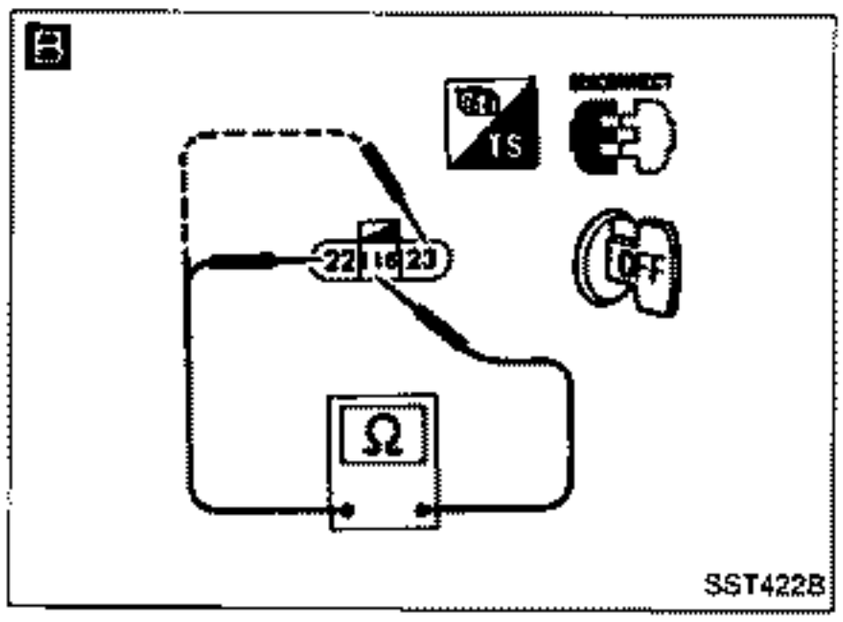

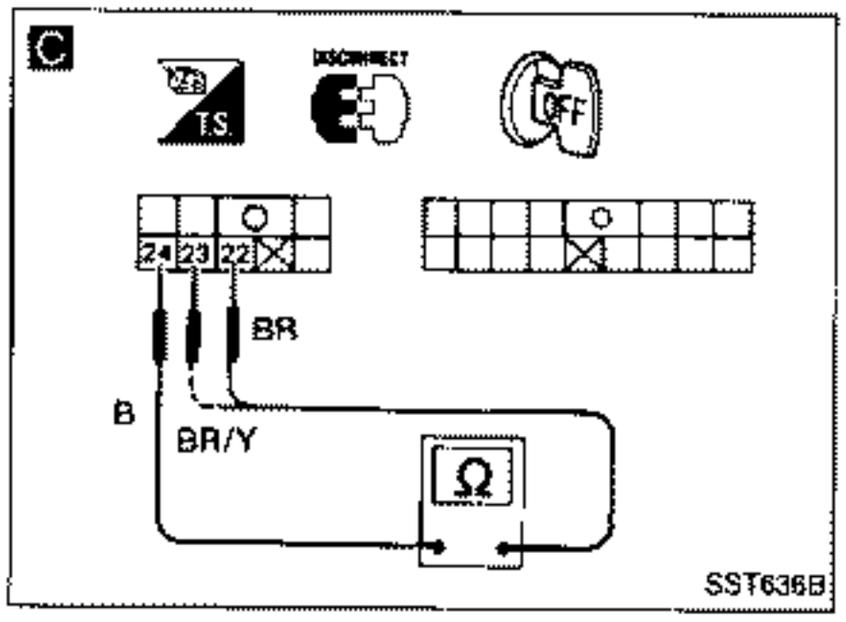

Diagnostic Procedure 6

SYMPTOM:
HICAS solenoid valve (left and right) output is not present.

START

A

CHECK CONNECTOR CONTINUITY.
Disconnect HICAS solenoid valve connector and control unit connector, and reconnect them firmly. Conduct self-diagnosis.

O.K. → Poor connector connection

N.G.

B

CHECK RESISTANCE OF LEFT AND RIGHT HICAS SOLENOID VALVES (on solenoid side).
1) Disconnect HICAS solenoid valve connector.
2) Measure resistance between HICAS solenoid valve connector terminals ㉒ and ㉓, and (116).

Resistance:
4 - 6Ω

N.G. → Replace HICAS solenoid valve.

O.K.

C

CHECK RESISTANCE OF LEFT AND RIGHT HICAS SOLENOID VALVES (on control unit side).
1) Disconnect control unit connector.
2) Measure resistance between body connector terminals ㉒ and ㉓, and ㉔.

Resistance:
4 - 6Ω

O.K. → Replace control unit.

N.G.

Repair or replace harness between control unit and HICAS solenoid valve.

Diagnostic Procedure 7

SYMPTOM:
Fail-safe valve output is not present.

START

A

CHECK CONNECTOR CONTINUITY.
Disconnect fail-safe valve connector and control unit connector, and reconnect them firmly.
Conduct self-diagnosis.

O.K. → Poor connector connection

N.G.

B

CHECK RESISTANCE OF FAIL-SAFE VALVE (on fail-safe valve side).
1) Disconnect fail-safe valve connector.
2) Measure resistance between connector terminals (18) and (114).
Resistance:
13 - 17Ω

N.G. → Replace fail-safe valve.

O.K.

C

CHECK RESISTANCE OF FAIL-SAFE VALVE (on control unit side).
1) Disconnect control unit connector.
2) Measure resistance between body connector terminals (18) and (24).
Resistance:
13 - 17Ω

O.K. → Replace control unit.

N.G.

Repair or replace harness between control unit and fail-safe valve.

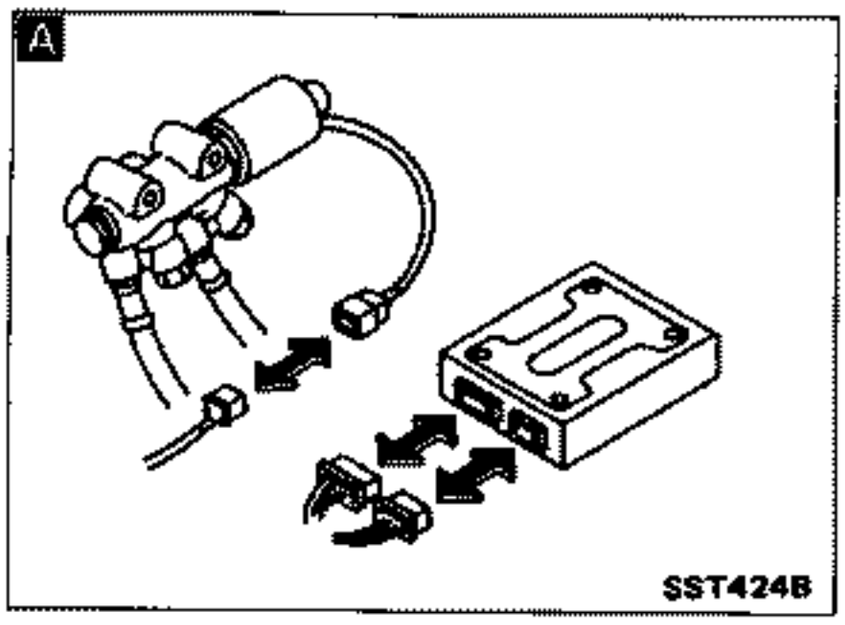

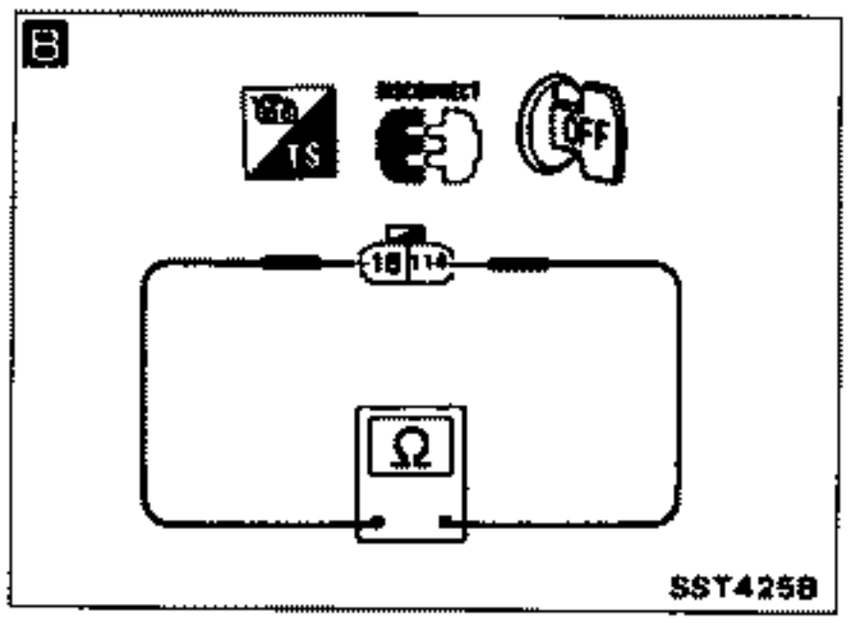

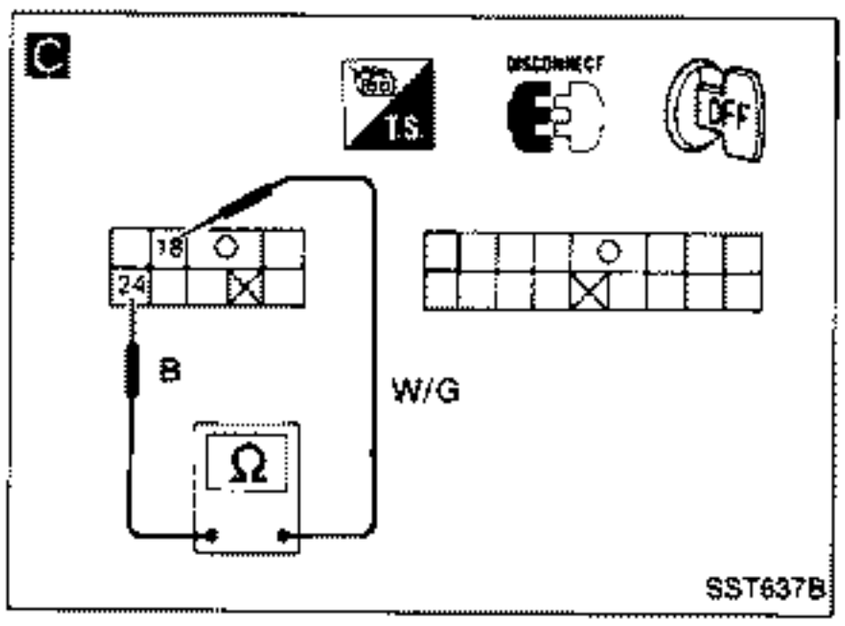

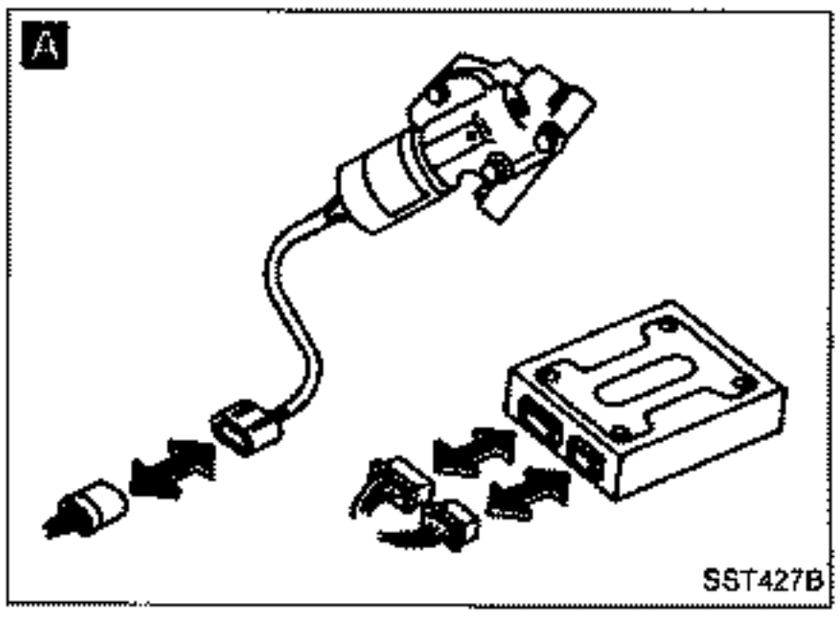

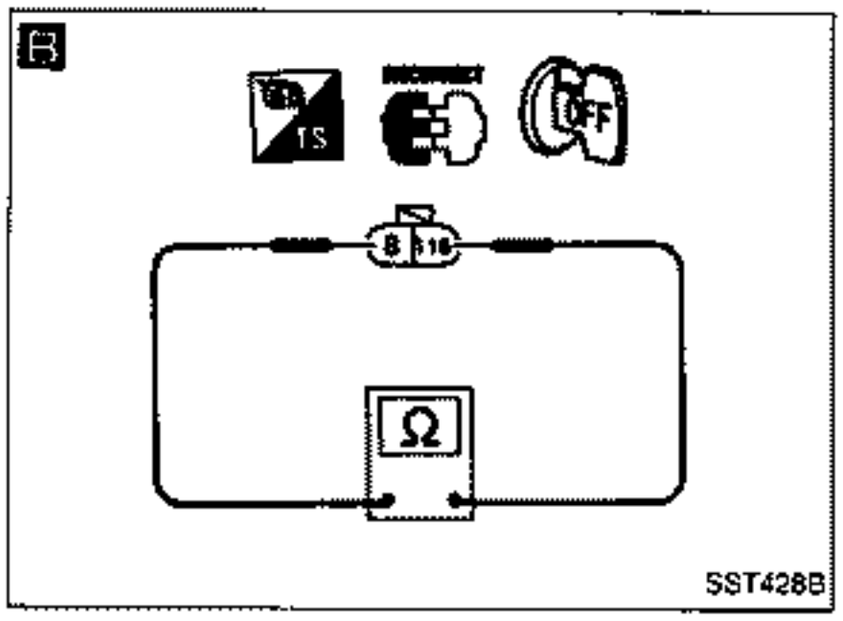

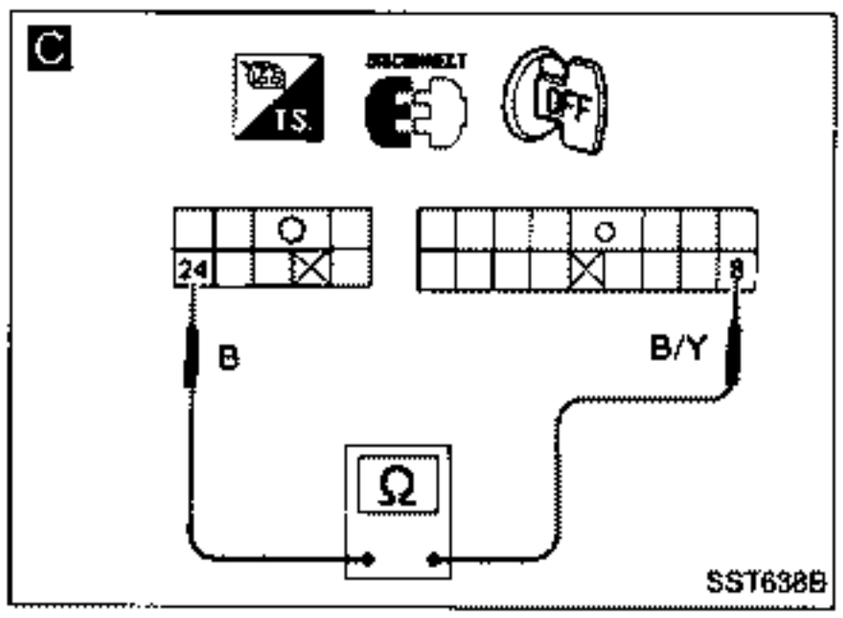

Diagnostic Procedure 8

SYMPTOM:
Power steering solenoid valve output is not present.

START

A

CHECK CONNECTOR CONTINUITY.
Disconnect power steering solenoid valve connector and control unit connector, and reconnect them firmly. Conduct self-diagnosis.

O.K. → Poor connector connection

N.G.

B

CHECK RESISTANCE OF POWER STEERING SOLENOID VALVE (on solenoid side).
1) Disconnect power steering solenoid valve connector.
2) Measure resistance between solenoid valve connector terminals (8) and (115).
Resistance:
4 - 6Ω

N.G. → Replace power steering solenoid valve.

O.K.

C

CHECK RESISTANCE OF POWER STEERING SOLENOID VALVE (on control unit side).
1) Disconnect control unit connector.
2) Measure resistance between body connector terminals (8) and (24).
Resistance:
4 - 6Ω

O.K. → Replace control unit.

N.G.

Repair or replace harness between control unit and power steering solenoid valve.

A

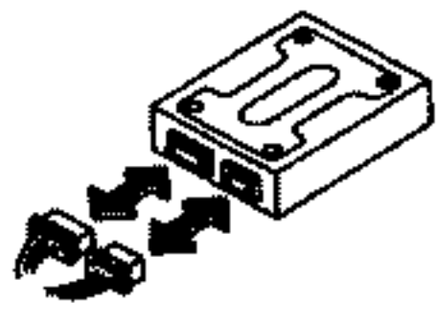

SST430B

Diagnostic Procedure 9

SYMPTOM:
Vehicle speed signal is not present.

START

A

CHECK CONNECTOR CONTINUITY.
Disconnect control unit connector and reconnect it firmly. Conduct self-diagnosis.

O.K. → Poor connector connection

N.G.

B

CHECK CONTROL UNIT INPUT SIGNAL.
1) Raise rear end of vehicle so that rear wheels rotate freely.
2) Set CONSULT in DATA MONITOR mode.
Vehicle speed display (km/h)
OR
Measure voltage variations between control unit connector terminals ⑥ and ㉔ while slowly rotating rear wheels by hand.
Voltage must change between 0 and 5V.

O.K. → Replace control unit.

N.G.

Repair or replace harness between speed sensor or control unit and speedometer.

B

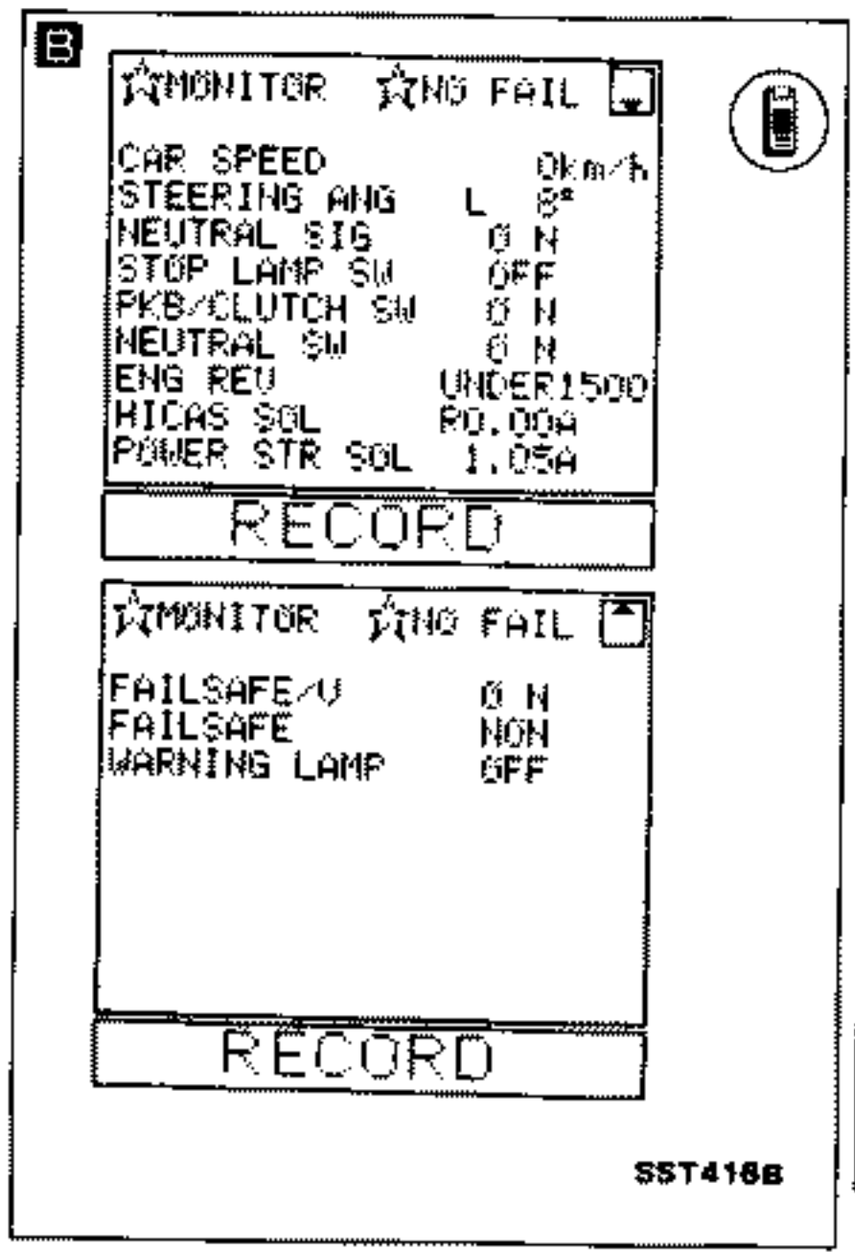

SST416B

B

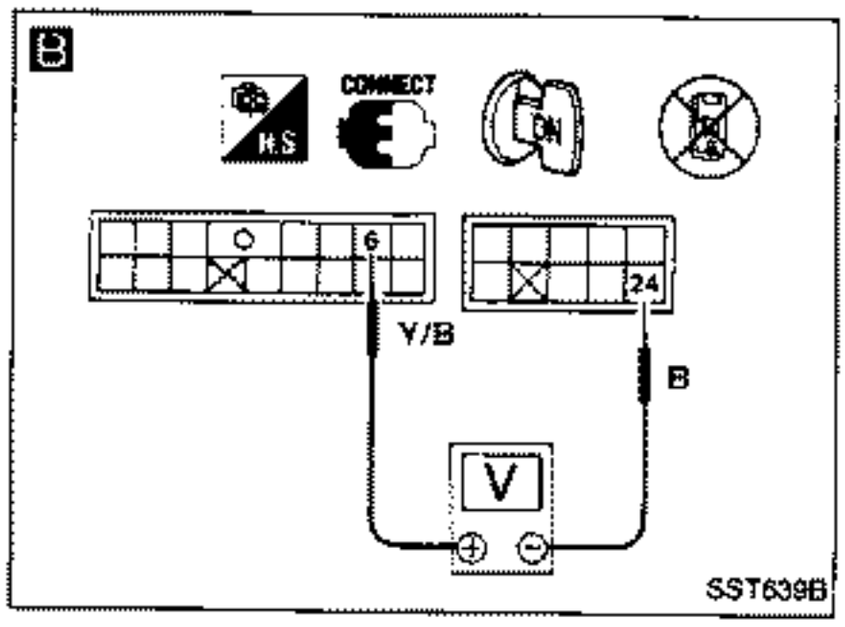

SST639B

A



SST430B

B

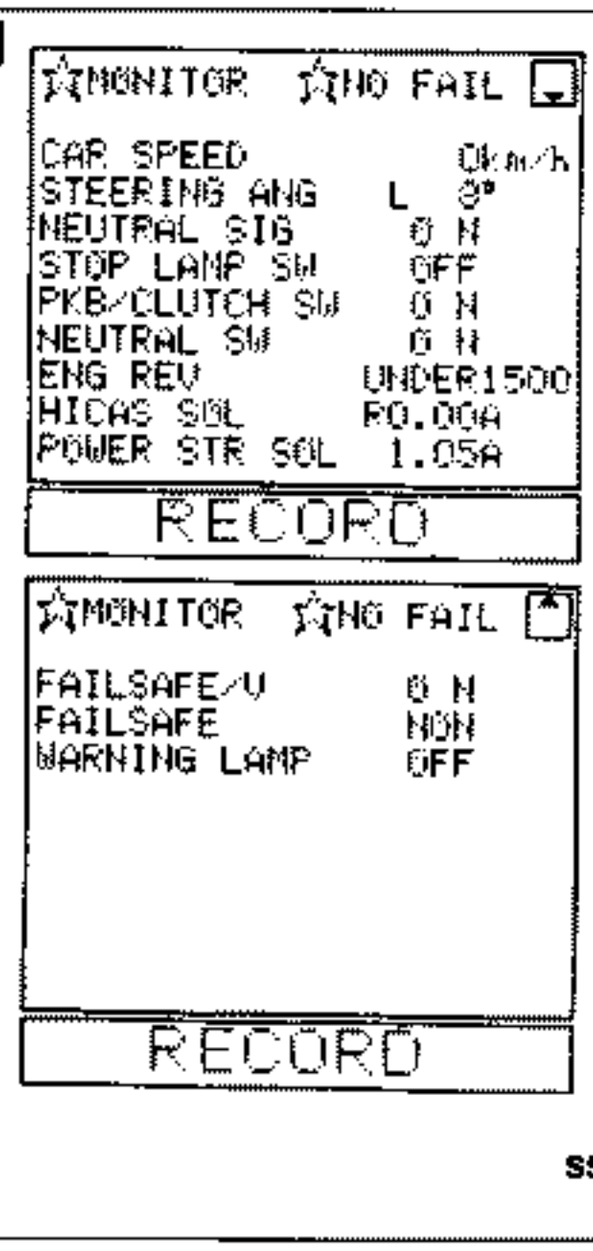

SST416B

B

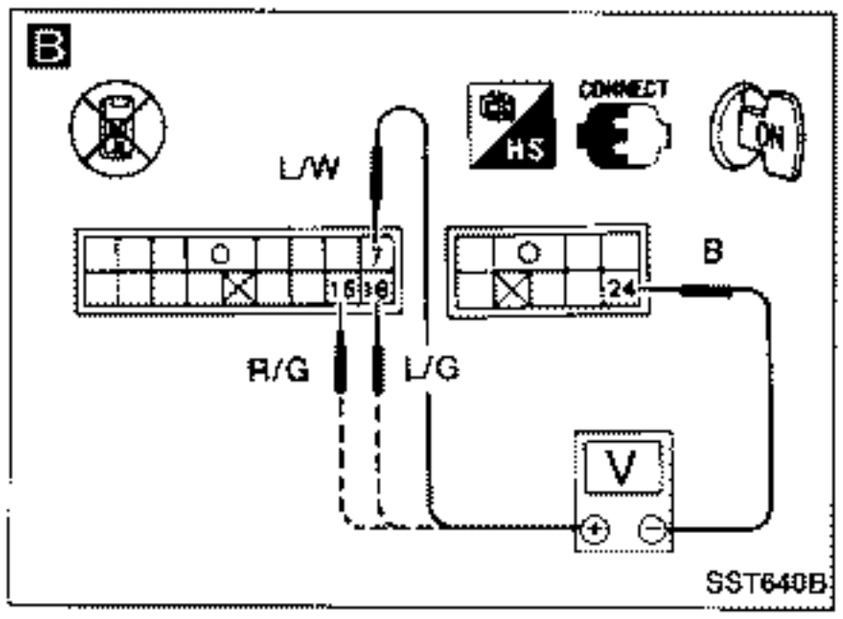

SST640B

C

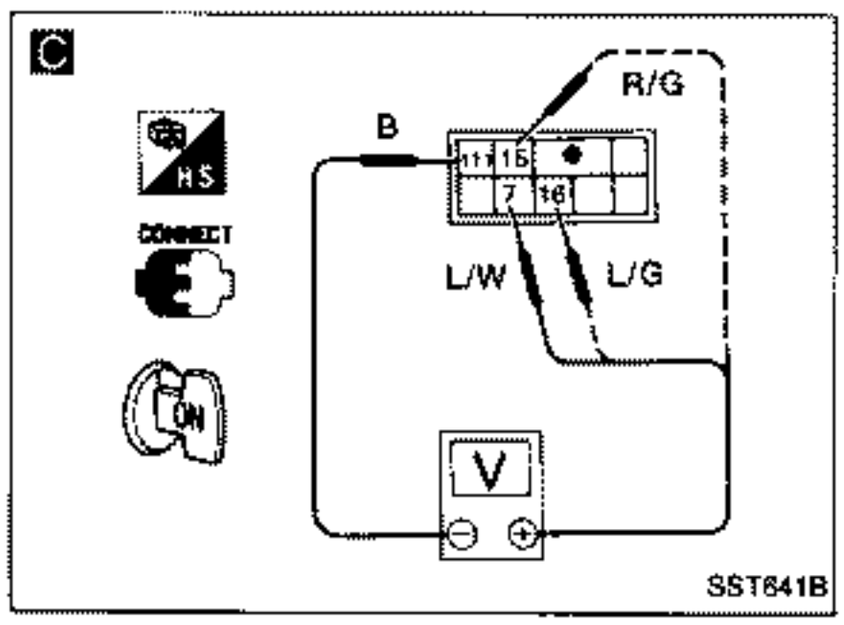

SST641B

Diagnostic Procedure 10

SYMPTOM:
Steering angle sensor input is not present.

START

A

CHECK CONNECTOR CONTINUITY.
Disconnect control unit connector and reconnect it firmly. Conduct self-diagnosis.

O.K. → Poor connector connection

N.G.

B

CHECK CONTROL UNIT INPUT SIGNAL.
1) Turn ignition switch "ON".
2) Set CONSULT in DATA MONITOR mode.
Steering angle deg.
Neutral signal ON-OFF
OR
Measure voltage variations between control unit terminals ⑦, ⑮ and ⑯, and ㉔ when steering wheel is slowly turned to the left and right at least 20° from the neutral position.
Do not turn steering wheel quickly.
Voltage must change from 0 to at least 5V.

O.K. → Replace control unit.

N.G.

C

CHECK STEERING ANGLE SENSOR OUTPUT SIGNAL.
1) Turn signal switch "ON".
2) Measure voltage variations between steering angle sensor connector terminals ⑦, ⑮ and ⑯, and (111).
Voltage must change from 0 to at least 5V.

O.K. → Repair or replace harness between control unit and steering angle sensor.

N.G.

Ⓐ

Diagnostic Procedure 10 (Cont'd)

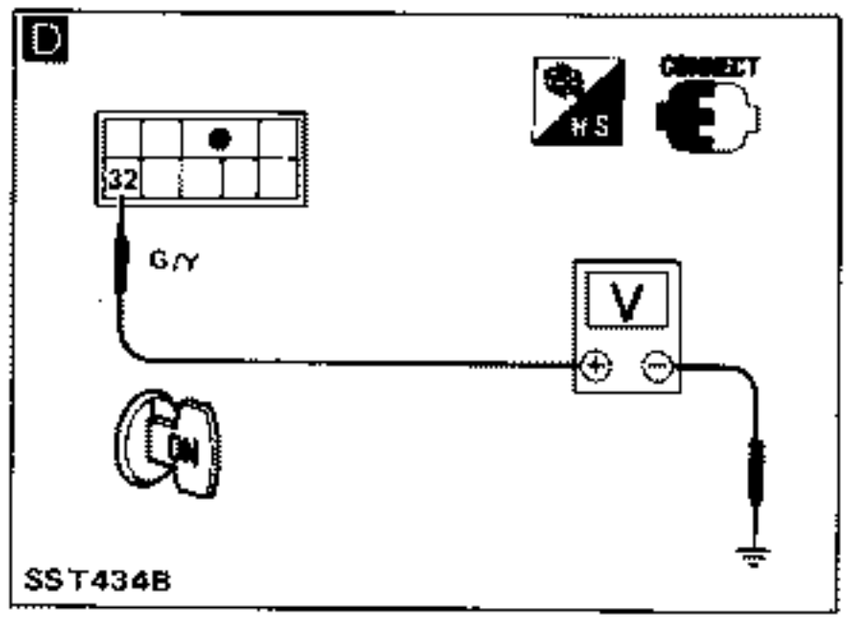

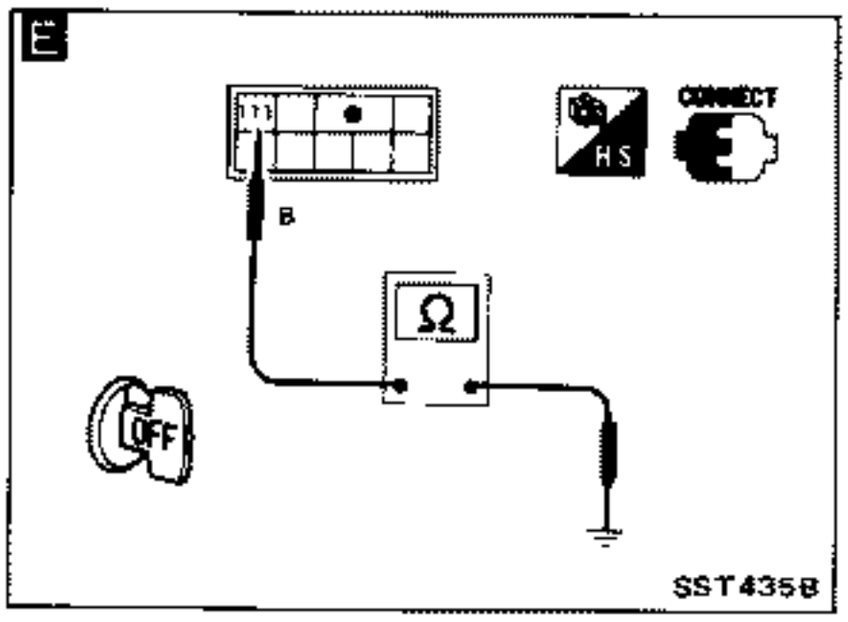

(A)

D CHECK STEERING ANGLE SENSOR POWER SUPPLY.

1) Turn ignition switch "ON".
2) Measure voltage across steering angle sensor connector terminal (32) and ground.

Voltage:

Approximately 12V

O.K. → Replace steering angle sensor.

E CHECK STEERING ANGLE SENSOR GROUND CIRCUIT.

Check continuity between steering angle sensor terminal (111) and body metal (ground).

Continuity should exist.

N.G. ↓

Repair or replace power supply harness or ground harness.

A



SST430S

B

☆MONITOR ☆NO FAIL

CAR SPEED	0km/h
STEERING ANG	L 8°
NEUTRAL SIG	ON
STOP LAMP SW	OFF
PKB/CLUTCH SW	ON
NEUTRAL SW	ON
ENG REV	UNDER1500
HICAS SOL	RO.00A
POWER STR SOL	1.05A

RECORD

☆MONITOR ☆NO FAIL

FAILSAFE/U	ON
FAILSAFE	NON
WARNING LAMP	OFF

RECORD

SST416B

B

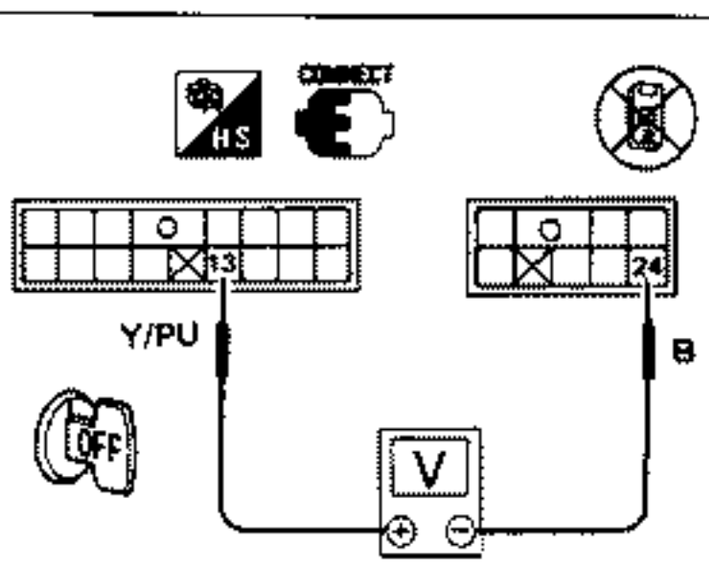

SST642B

Diagnostic Procedure 11

SYMPTOM:
Parking brake input is not present.

START

A

CHECK CONNECTOR CONTINUITY.
Disconnect control unit connector and reconnect it firmly. Conduct self-diagnosis.

O.K. → Poor connector connection

N.G. ↓

B

CHECK CONTROL UNIT INPUT SIGNAL.
Set CONSULT in DATA MONITOR mode.
ON-OFF display
OR
Measure voltage variations between control unit terminals ⑬ and ㉔ when parking brake is engaged.
Voltage:
0V → Approximately 5V

O.K. → Replace control unit.

N.G. ↓

Check parking brake switch and harness.

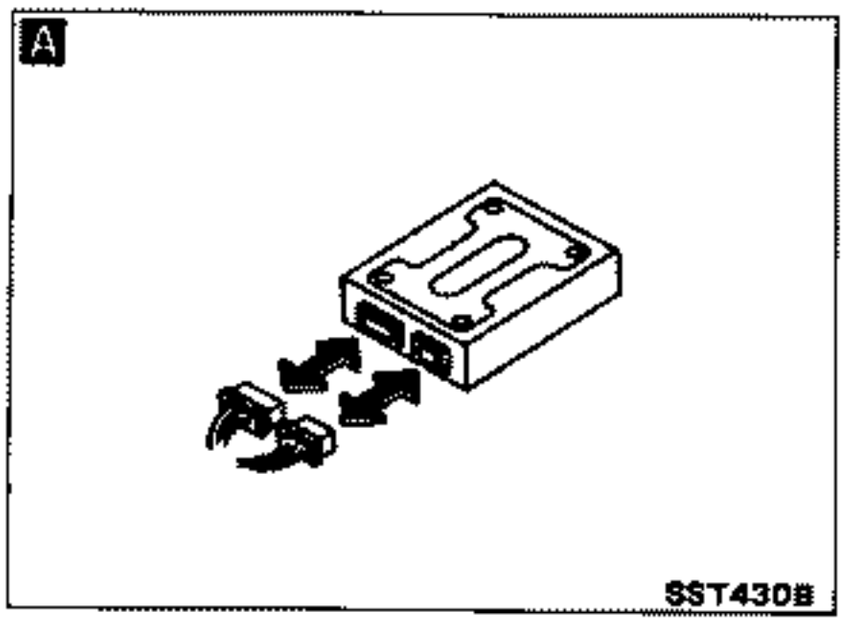

Diagnostic Procedure 12

SYMPTOM:
Inhibitor switch input is not present.

START

A

CHECK CONNECTOR CONTINUITY.
Disconnect control unit connector and reconnect it firmly. Conduct self-diagnosis.

O.K. → Poor connector connection

N.G.

B

CHECK CONTROL UNIT INPUT SIGNAL.
Set CONSULT in DATA MONITOR mode.
ON-OFF display

OR

Measure voltage variations between control unit terminals ⑭ and ㉔ when shift lever is moved from P to any other position.
Voltage:
0V → Approximately 5V

O.K. → Replace control unit.

N.G.

Check inhibitor switch and harness.

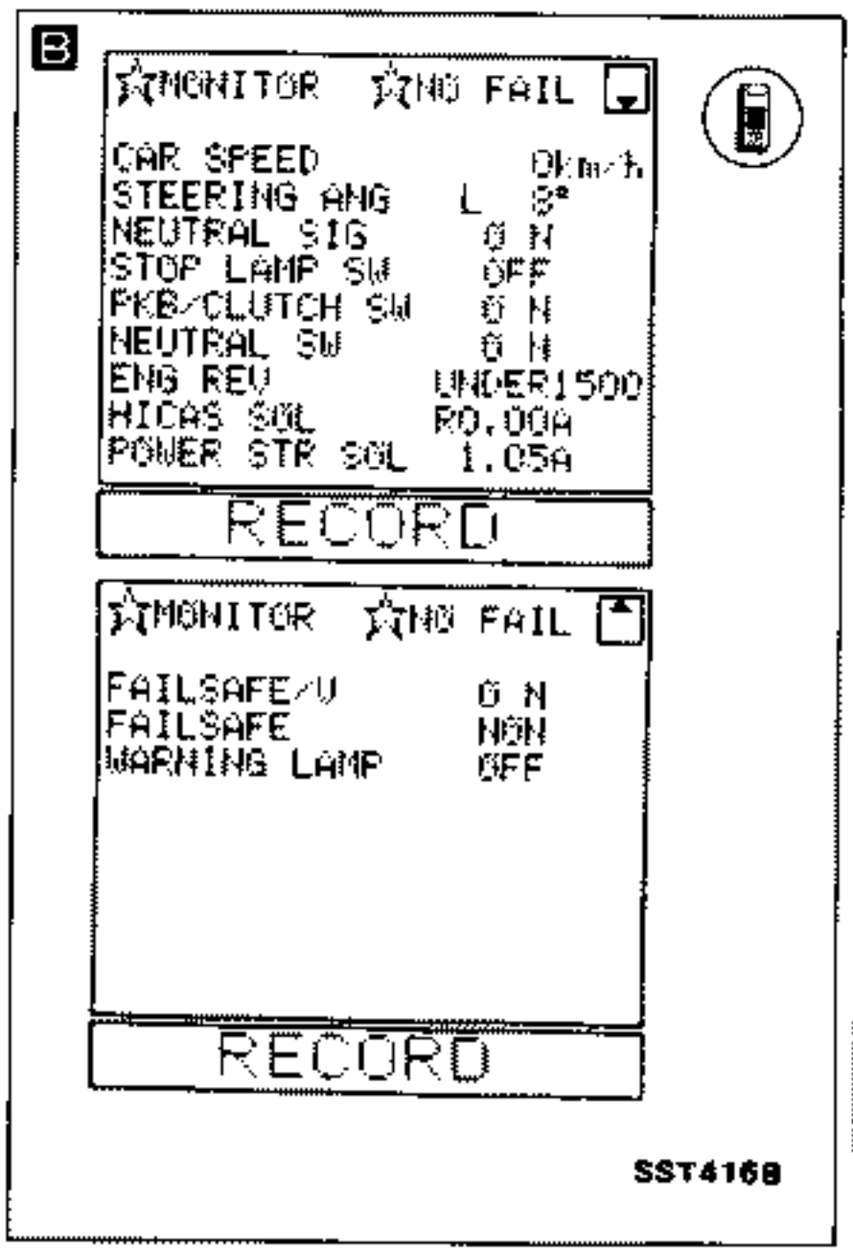

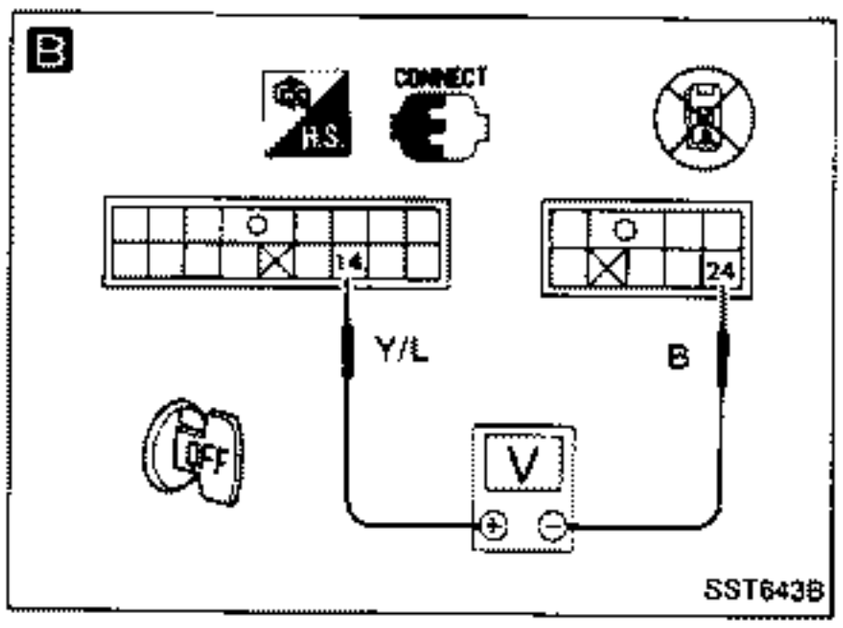

Control Unit Inspection Table

The standard values (voltage) measured with an analog tester, in contact with the control unit terminal, are shown below:

Terminal No.	Application	Standard value
1	Service support CLK input	—
2	Service support RX output	—
3	IGN power supply	Key switch ON: Approximately 12V Key switch in other position: 0V
4	Battery	Approximately 12V
5	E.C.C.S. revolution signal	—
6	Vehicle speed signal	Rear wheel rotating 0V ←→ greater than 5V (approx.), intermittent
7	Steering neutral position sensor	Approximately 5V (Neutral position)
8	Resistance of power steering solenoid valve	4 - 6Ω
9	Service support TX output	—
10	Ground	0V
11	Stop lamp switch signal	Brake ON: Approximately 12V Brake OFF: 0V
13	Parking brake signal	Parking brake engaged (A/T)/ clutch disengaged (M/T): Approximately 12V
14	Inhibitor signal	Shift lever in any position other than Parking: Approximately 5V
15	Steering angle sensor-1 signal	Steering wheel turned 0 ←→ Approximately 5V, intermittent
16	Steering angle sensor-2 signal	—
17	Ground	0V
18	Resistance of fail-safe valve	13 - 17Ω
19	IGN power supply	Ignition switch ON: Approximately 12V Ignition switch in other position: 0V
20	HICAS warning lamp	—
22	Resistance of HICAS solenoid valve (R.H.)	4 - 6Ω
23	Resistance of HICAS solenoid valve (L.H.)	4 - 6Ω
24	Ground	0V

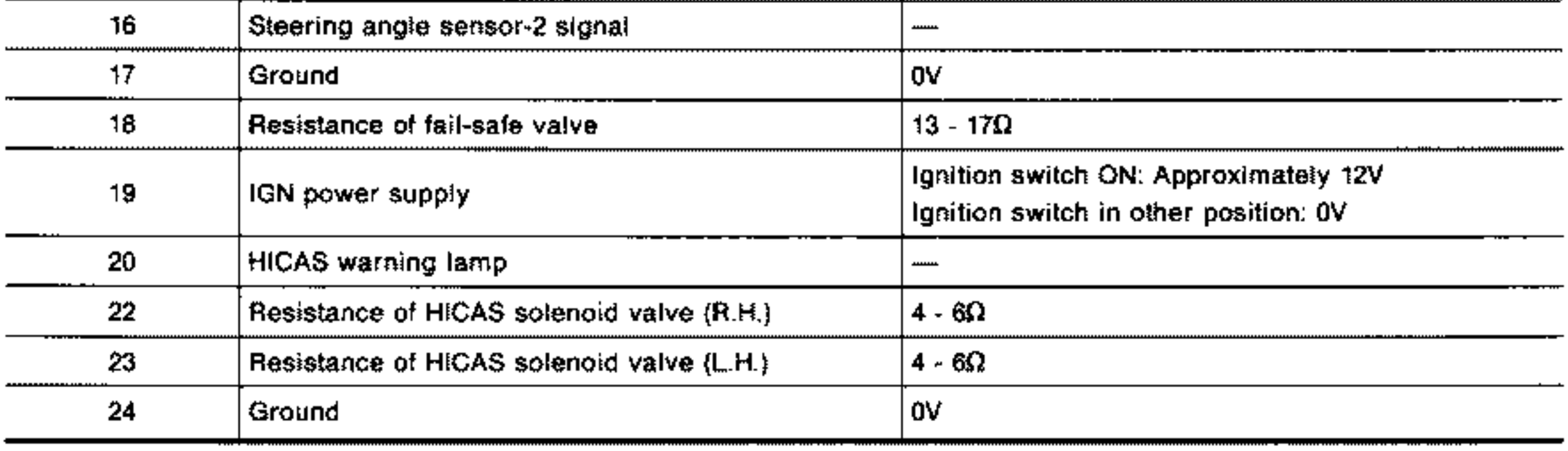

General Specifications

Applied model	Australia	Europe
	Without SUPER HICAS	With SUPER HICAS
Steering model	Power steering	
Steering gear type	PR26SE	
Steering overall gear ratio	16.9	16.7
Turn of steering wheel (Lock to lock)	2.7	2.7
Steering column type	Collapsible	

Inspection and Adjustment

GENERAL

Steering wheel axial play mm (in)	0 (0)
Steering wheel play mm (in)	35 (1.38) or less
Movement of gear housing mm (in)	±2 (±0.08) or less

STEERING COLUMN

Steering position	R.H.D.	L.H.D.
Steering column length "L_1" mm (in)	745.9 - 747.5 (29.37 - 29.43)	
Steering column lower shaft length "L_2" mm (in)	314.6 - 316.2 (12.39 - 12.45)	280.6 - 282.2 (11.05 - 11.11)

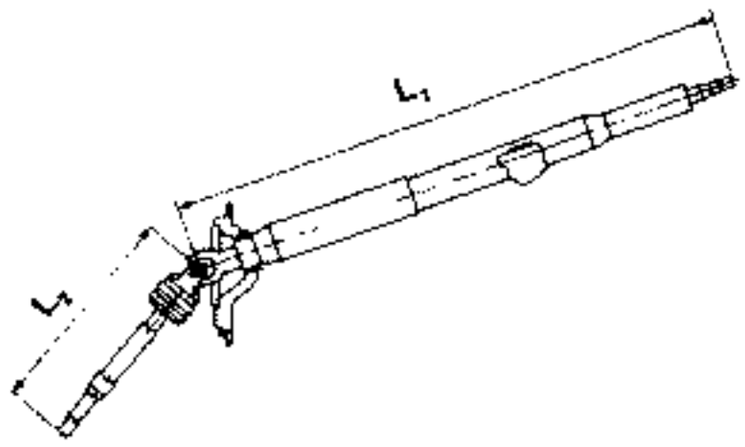

SST315B

STEERING GEAR AND LINKAGE

Steering gear type	PR26SE
Tie-rod outer ball joint	
Swinging force (at cotter pin hole) N (kg, lb)	4.61 - 46.1 (0.47 - 4.7, 1.04 - 10.4)
Rotating torque N·m (kg-cm, in-lb)	0.29 - 2.94 (3.0 - 30.0, 2.6 - 26.0)
Axial end play mm (in)	0 (0)
Tie-rod inner ball joint	
Swinging force* N (kg, lb)	8.8 - 78.5 (0.9 - 8.0, 2.0 - 17.6)
Rotating torque N·m (kg-cm, in-lb)	1.0 - 8.8 (10 - 90, 8.7 - 78.1)
Axial end play mm (in)	0 (0)
Tie-rod standard length "L" mm (in)	155 (6.10)

*: Measuring point

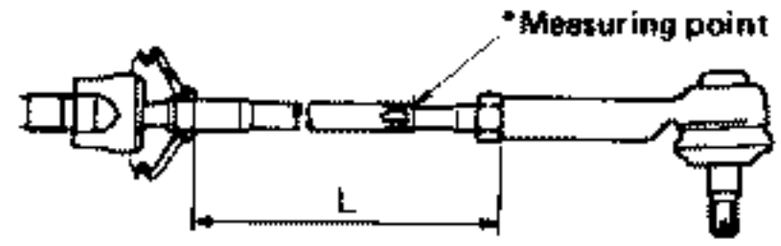

SST304B

Rack stroke "L"	mm (in)	59.5 (2.343)

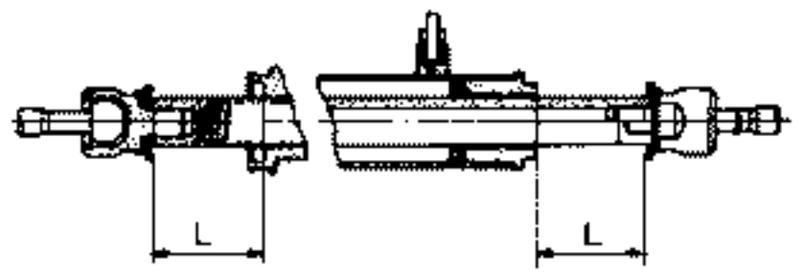

SST307B

Inspection and Adjustment (Cont'd)

POWER STEERING

Applied model	Without SUPER HICAS	With SUPER HICAS
Retainer adjustment		
Adjusting screw		
Initial tightening torque N·m (kg-cm, in-lb)	4.9 - 5.9 (50 - 60, 43 - 52)	
Retightening torque after loosening	0.2 (2, 1.7)	
Tightening torque after gear has settled	4.9 (50, 43)	
Returning angle degree	60° - 100°	
Pinion gear preload without gear oil N·m (kg-cm, in-lb)		
Within 100° from the neutral position		
Average rotating torque	0.78 - 1.27 (8.0 - 13.0, 6.9 - 11.3)	
Maximum torque deviation	0.4 (4, 3.5)	
Except above range		
Maximum rotating torque	1.9 (19, 16)	
Maximum torque deviation	0.6 (6, 5.2)	
Rack sliding force N (kg, lb)		
Under normal operating oil pressure		
Range within ± 11.5 mm (± 0.453 in) from the neutral position	206 - 265 (21 - 27, 46 - 60)	201.0 - 250.1 (20.5 - 25.5, 45.2 - 56.2)
Except above range	Not more than 39 (4, 9) beyond above value	
Steering wheel turning force (Measured at one full turn from the neutral position) N (kg, lb)	39 (4, 9) or less	
Fluid capacity (Approximate) ℓ (Imp qt)	1.3 (1-1/8)	2.0 (1-3/4)
Oil pump maximum pressure kPa (bar, kg/cm², psi)	7,649 - 8,238 (76.5 - 82.4, 78 - 84, 1,109 - 1,194)	Main: 7,649 - 8,238 (76.5 - 82.4, 78 - 84, 1,109 - 1,194) Sub: 6,375 - 6,865 (63.7 - 68.6, 65 - 70, 924 - 995)

POWER CYLINDER LOWER LINK (SUPER HICAS)

Power cylinder lower link ball joint		
Swinging force*	N (kg, lb)	2.9 - 41.2 (0.3 - 4.2, 0.7 - 9.3)
Axial end play	mm (in)	0 (0)
Power cylinder lower link standard length "L"	mm (in)	309.5 (12.19)
Stroke	mm (in)	3.0 (0.118)

*: Measuring point

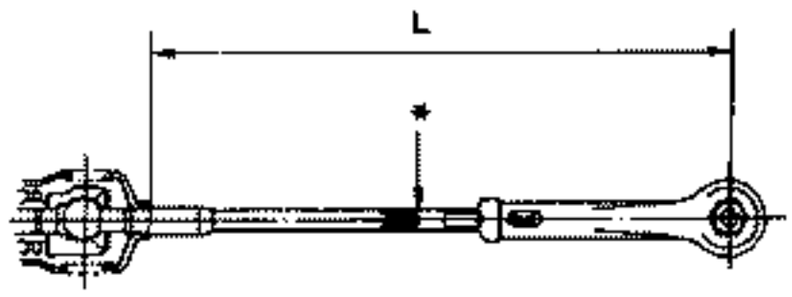

SST486B

BODY

SECTION BF

CONTENTS

GENERAL SERVICING
(Including all clips & fasteners) ..... BF- 2
BODY END ..... BF- 6
DOOR
(Including "Power Window" and "Power Door Lock") BF-10
INSTRUMENT PANEL BF-16
INTERIOR AND EXTERIOR
(In EXTERIOR, including "Weatherstrips") BF-18
T-BAR ROOF BF-28
REAR AIR SPOILER BF-30
SEAT BF-32
WINDSHIELD AND WINDOWS BF-35
MIRROR BF-40
BODY ALIGNMENT BF-42

When you read wiring diagrams:
- **Read GI section, "HOW TO READ WIRING DIAGRAMS".**
- **See EL section, "POWER SUPPLY ROUTING" for power distribution circuit.**

★ **For seat belt, refer to MA section.**

Precautions

- When removing or installing various parts, place a cloth or padding onto the vehicle body to prevent scratches.
- Handle trim, molding, instruments, grille, etc. carefully during removal or installation. Be careful not to soil or damage them.
- Apply sealing compound where necessary when installing parts.
- When applying sealing compound, be careful that the sealing compound does not protrude from parts.
- When replacing any metal parts (for example body outer panel, members, etc.), be sure to take rust prevention measures.

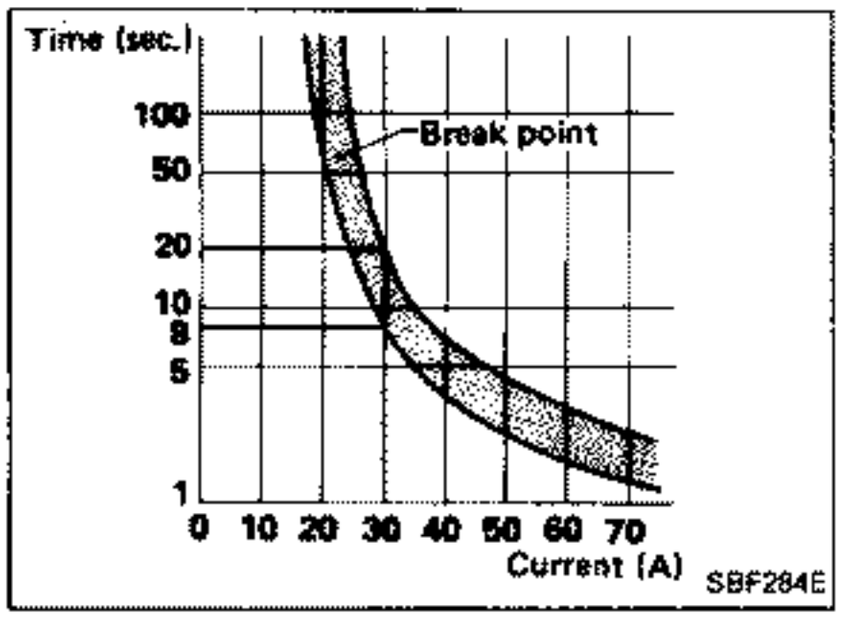

Circuit Breaker Inspection

For example, when current is 30A, the circuit is broken within 8 to 20 seconds.
Circuit breakers are used in the following systems.

- Power window & power door lock
- Power seat

Clip and Fastener

- Clips and fasteners in BF section correspond to the following numbers and symbols.
- Replace any clips and/or fasteners which are damaged during removal or installation.

No.	Symbol	Shape	Removal & Installation
C101	 SBF092B	 SBF109B	**Removal:** **Remove by bending up with a flat-bladed screwdriver.** 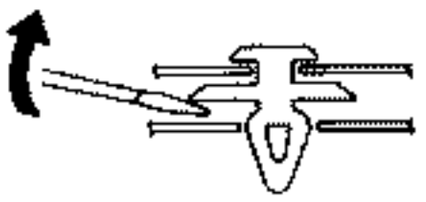 SBF094B
C102	 SBF113B	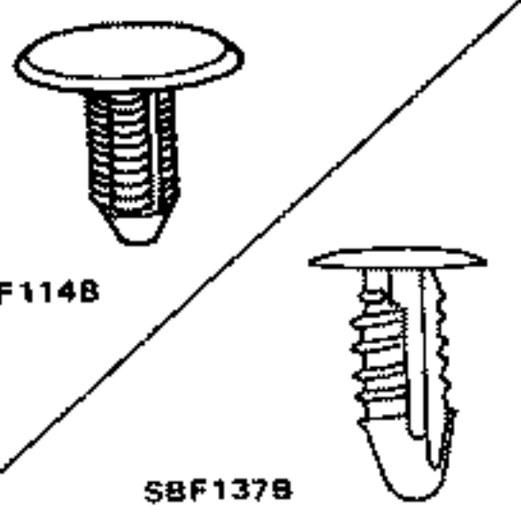 SBF114B SBF137B	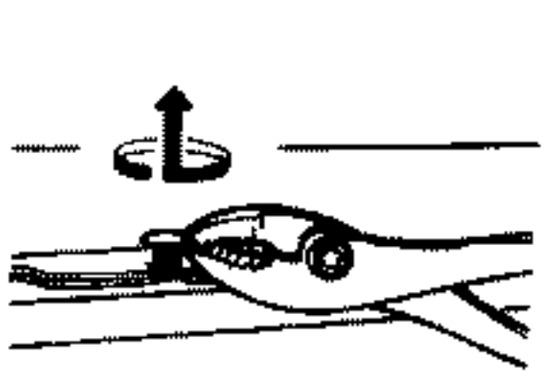 **Removal:** **Pull up while rotating.** SBF115B

Clip and Fastener (Cont'd)

No.	Symbol	Shape	Removal & Installation
C105	 SBF141B	 SBF142B	**Removal:** **Tilt clip as indicated by arrow, then draw out.** 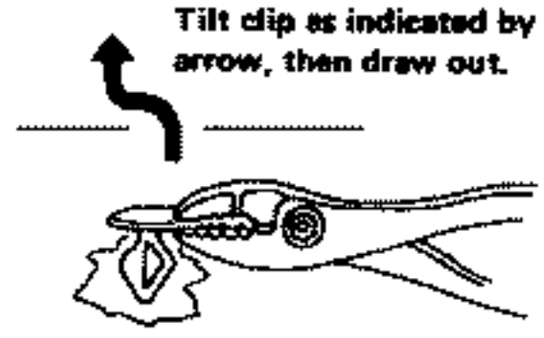 SBF143B
C106	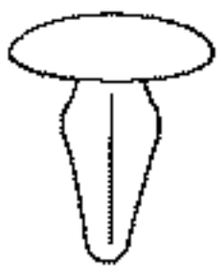 SBF089B	 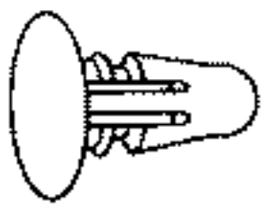 SBF090B	**Removal:** **Remove with flat-bladed screwdriver or pliers.** 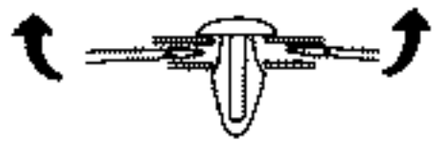 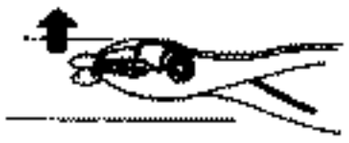 SBF091B
C203	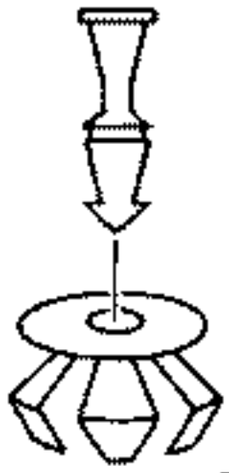 SBF318C	 SBF319C	**Push center pin to catching position. (Do not remove center pin by hitting it.)** Push 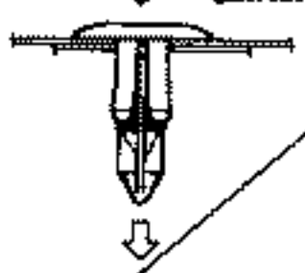 **Installation:** Push  SBF706E
C103	 SBF103B	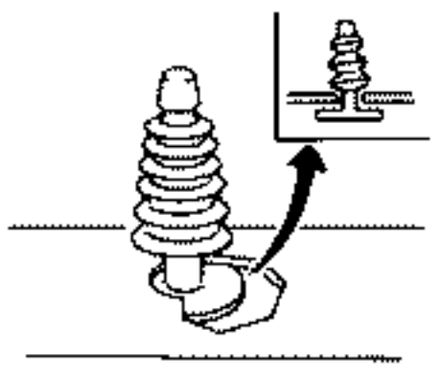 SBF104B	**Removal:** 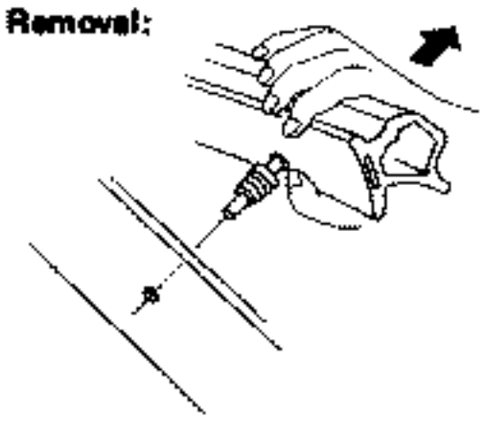 SBF147B
CE106	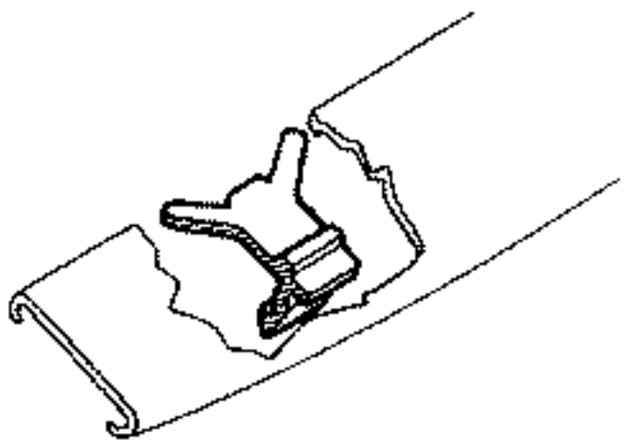 SBF653B	**Removal:** 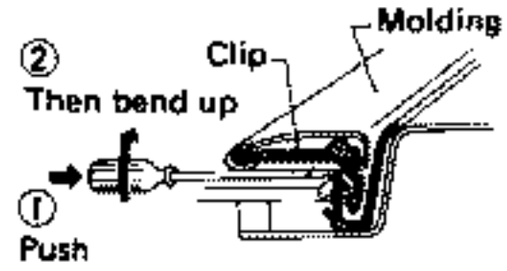 SBF654B	

Clip and Fastener (Cont'd)

No.	Symbol	Shape	Removal & Installation
CR103		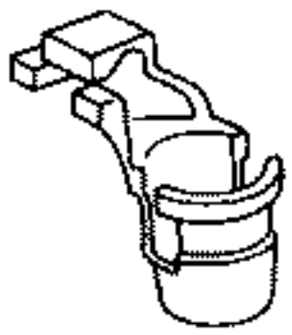 SBF768B	**Removal:** **Holder portion of clip must be spread out to remove rod.** 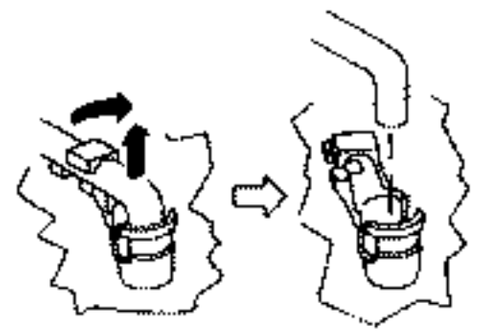 SBF770B
CS102	 SBF138B	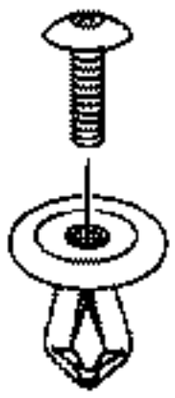 SBF139B	**Removal:** **Screw out with a Phillips screwdriver.** 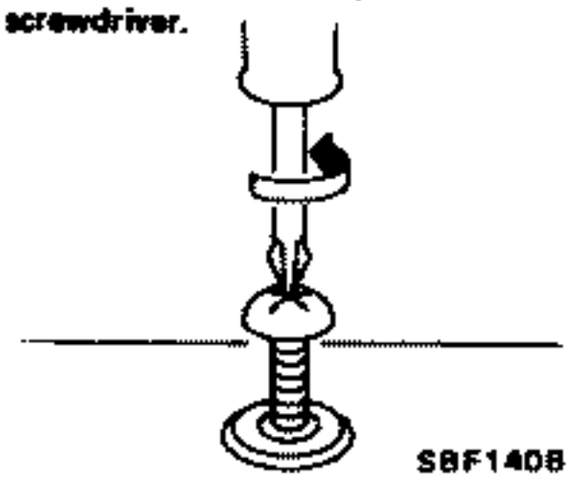 SBF140B

NOTE

Body Front End

- Hood adjustment: Adjust at hinge portion.
- Hood lock adjustment: After adjusting, check hood lock control operation. Apply a coat of grease to hood lock engaging mechanism.
- Hood opener: Do not attempt to bend cable forcibly.

Hood lock adjustment
- Adjust lock so that hood primary lock meshes at a position where hood is 1 to 1.5 mm (0.039 to 0.059 in) lower than fender.
- After hood lock adjustment, adjust bumper rubber.
- When securing hood lock, ensure it does not tilt. Striker must be positioned at the center of hood primary lock.
- After adjustment, ensure that hood primary and secondary lock operate properly.

Hood lock secondary latch hooking length

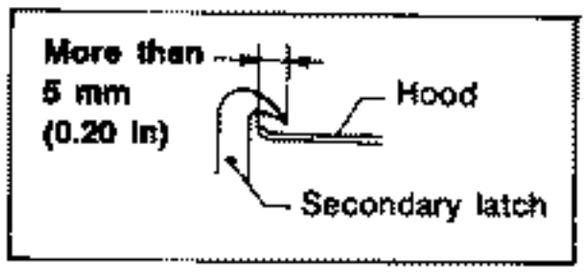

Bumper rubber adjustment
- Adjust so that hood is aligned with fender. [Bumper rubber free height is approx. 15 mm (0.59 in).]

★ : Bumper assembly mounting bolts, nuts and screws
: N·m (kg-m, ft-lb)
: Double-faced adhesive tape

Body Front End (Cont'd)

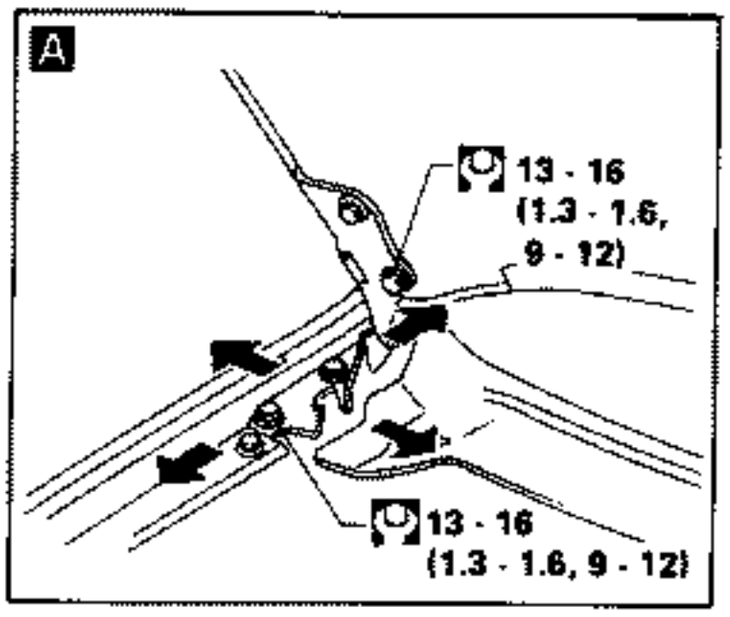

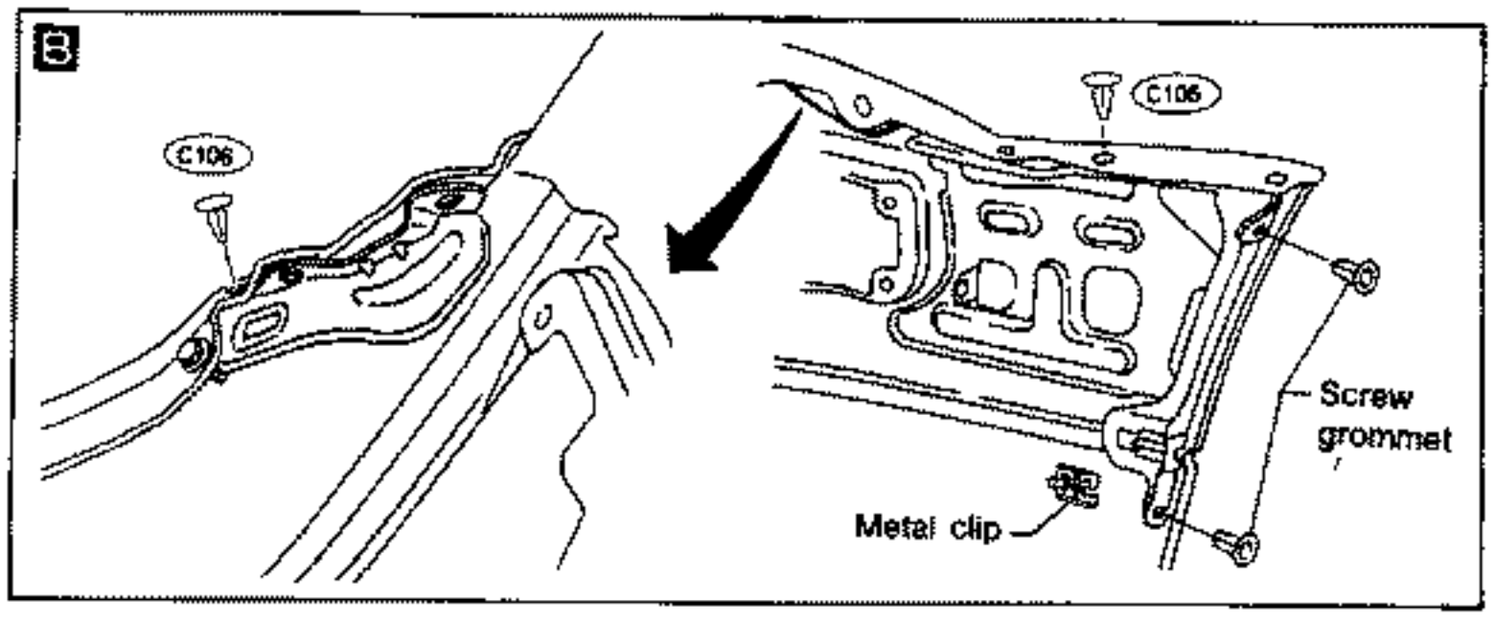

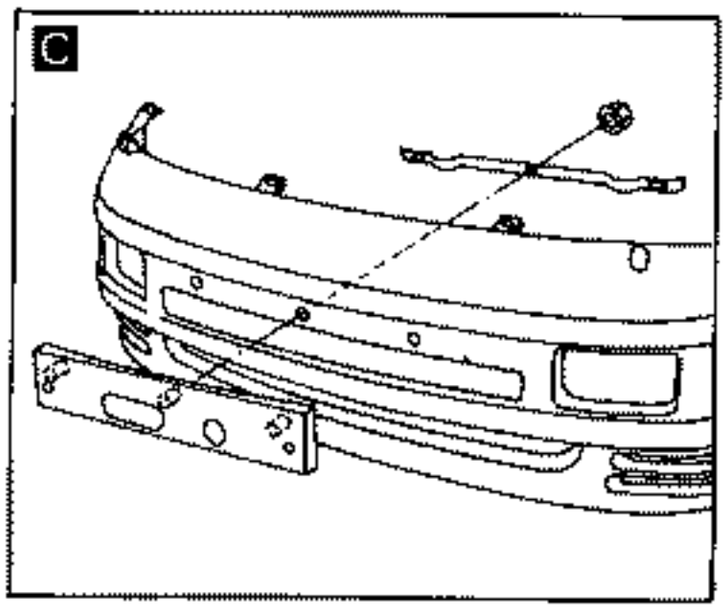

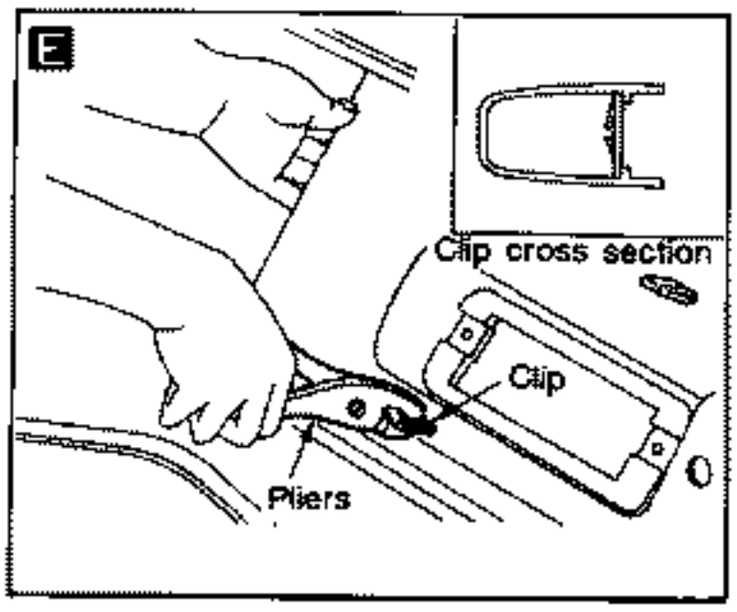

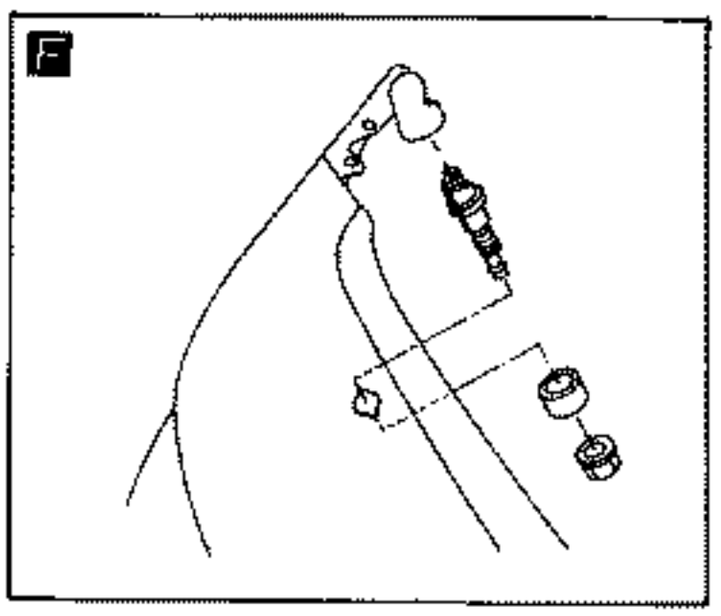

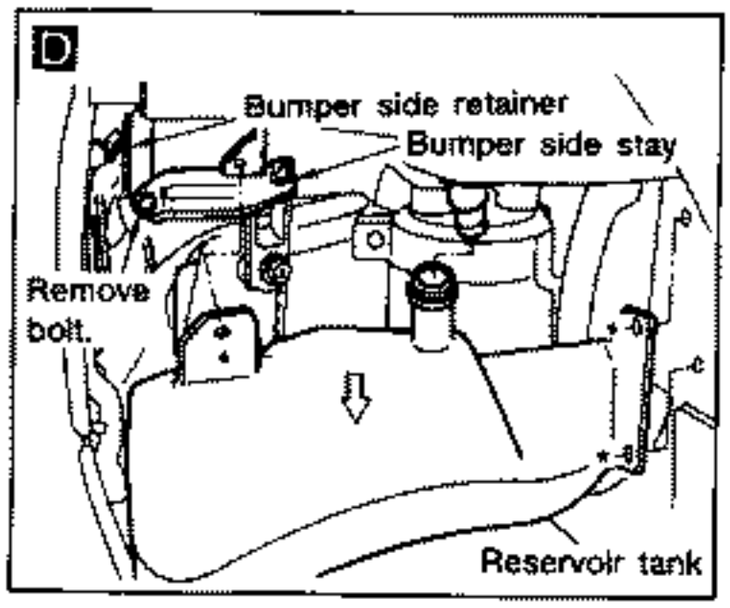

- Remove front fender protectors.
  Remove bolts (* in figure at left) securing reservoir tank, and slide reservoir tank downward.
- Remove bolt securing bumper side stay.

MBF024A

Service Notice

- Be sure to enlarge hood hinge holes (hinge to hood side) less than 10 mm (0.39 in) dia. for easy hood adjustment at hood-hinge portion.
- Be sure to take rust prevention measures after enlargement of holes.

Body Rear End and Opener

- Back door adjustment: Adjust at hinge-body portion for proper back door fit.
- Back door lock system adjustment: Adjust lock & striker so that they are in the center. After adjustment, check back door lock operation.

WARNING:

a. Be careful not to scratch back door stay when installing back door. A scratched stay may cause gas leakage.

b. The contents of the back door stay are under pressure. Do not take apart, puncture, apply heat or allow fire near it.

- Opener cable: do not attempt to bend cable using excessive force.
- After installation, make sure that trunk lid/back door and fuel filler lid open smoothly.

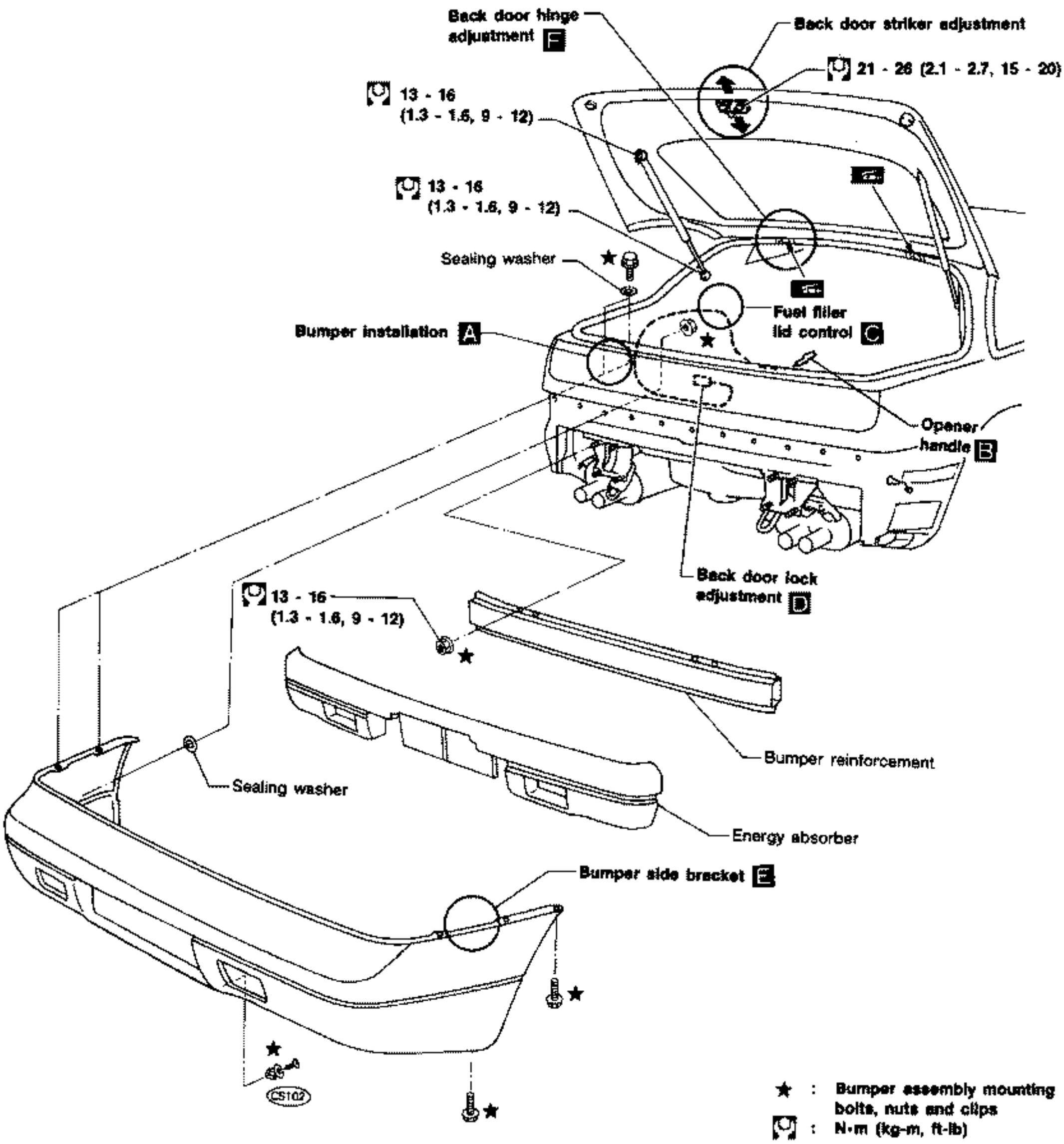

Body Rear End and Opener (Cont'd)

A

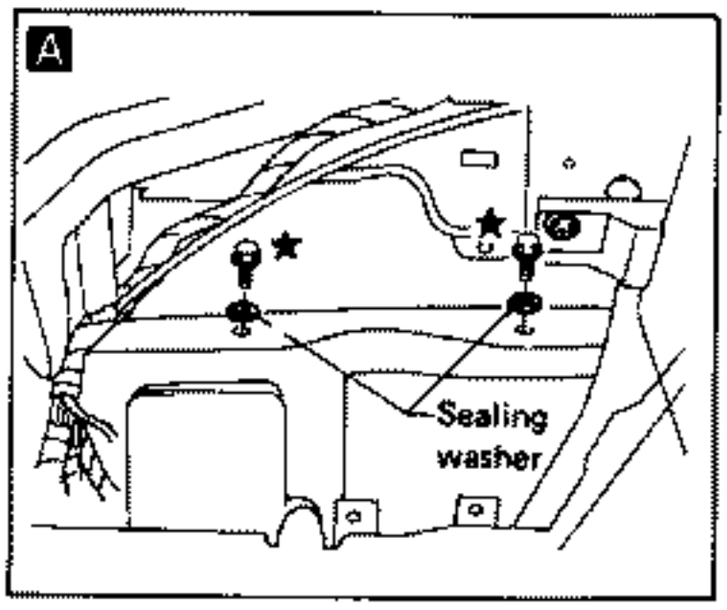

B

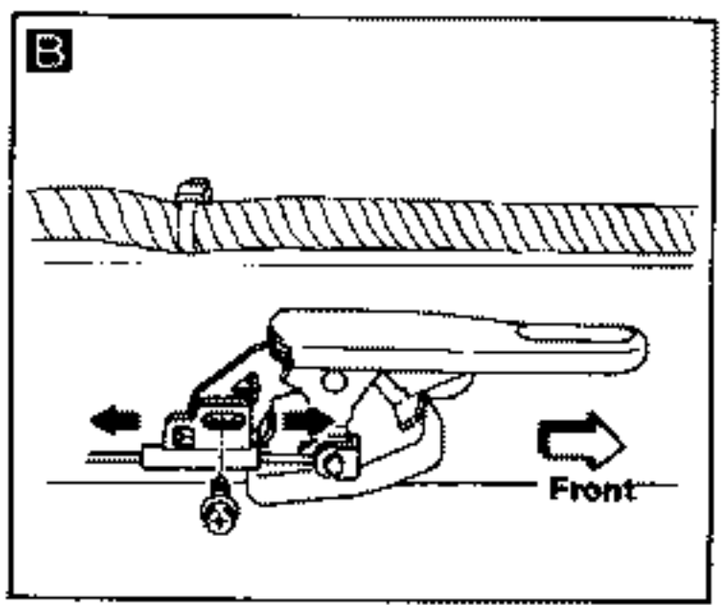

C

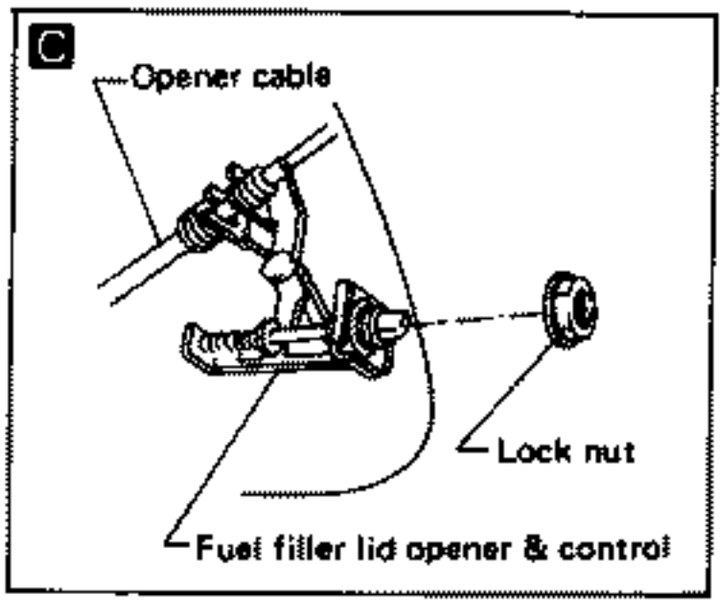

D

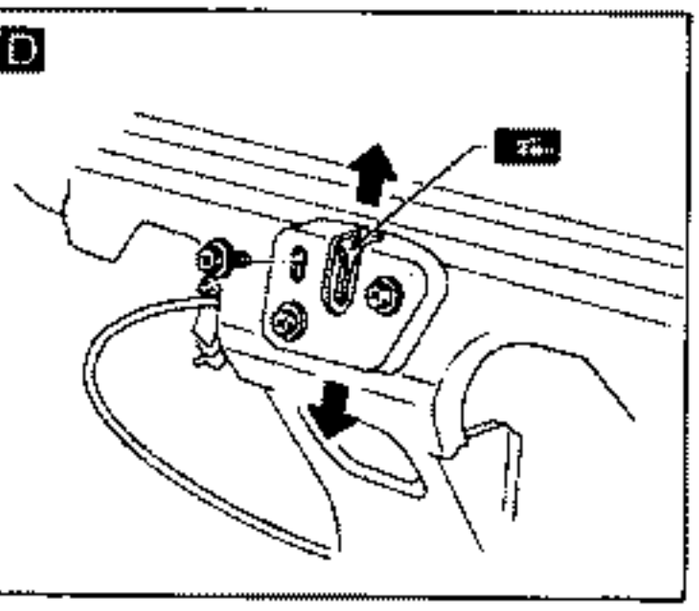

E

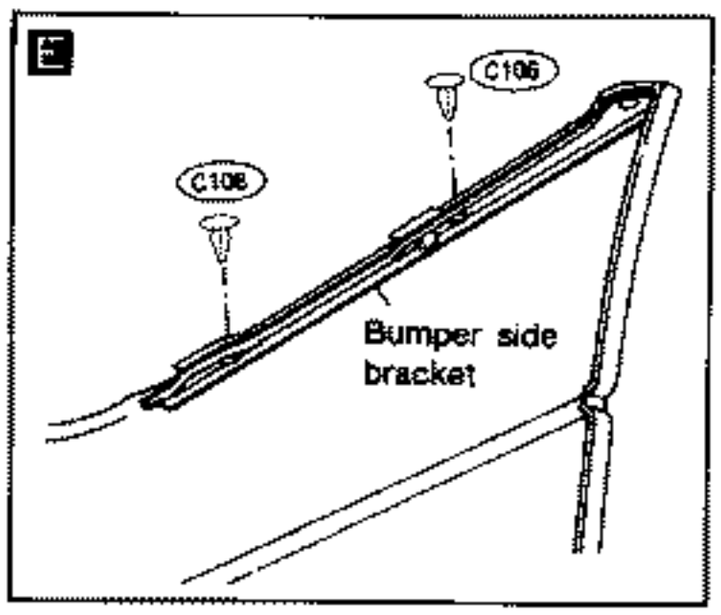

F

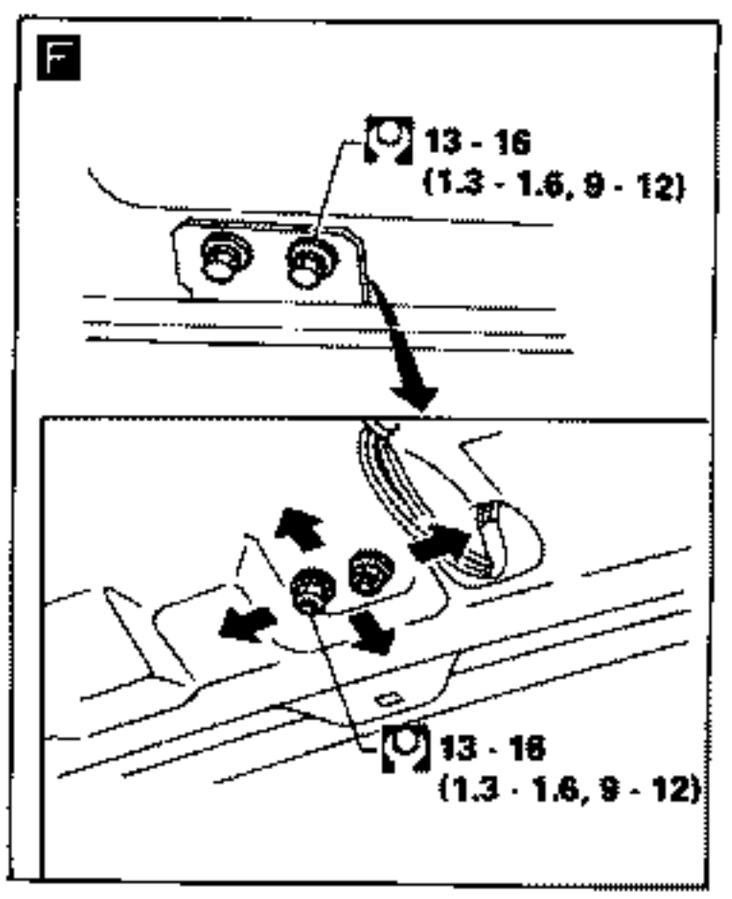

MBF025A

- After adjusting door or door lock, check door lock operation.

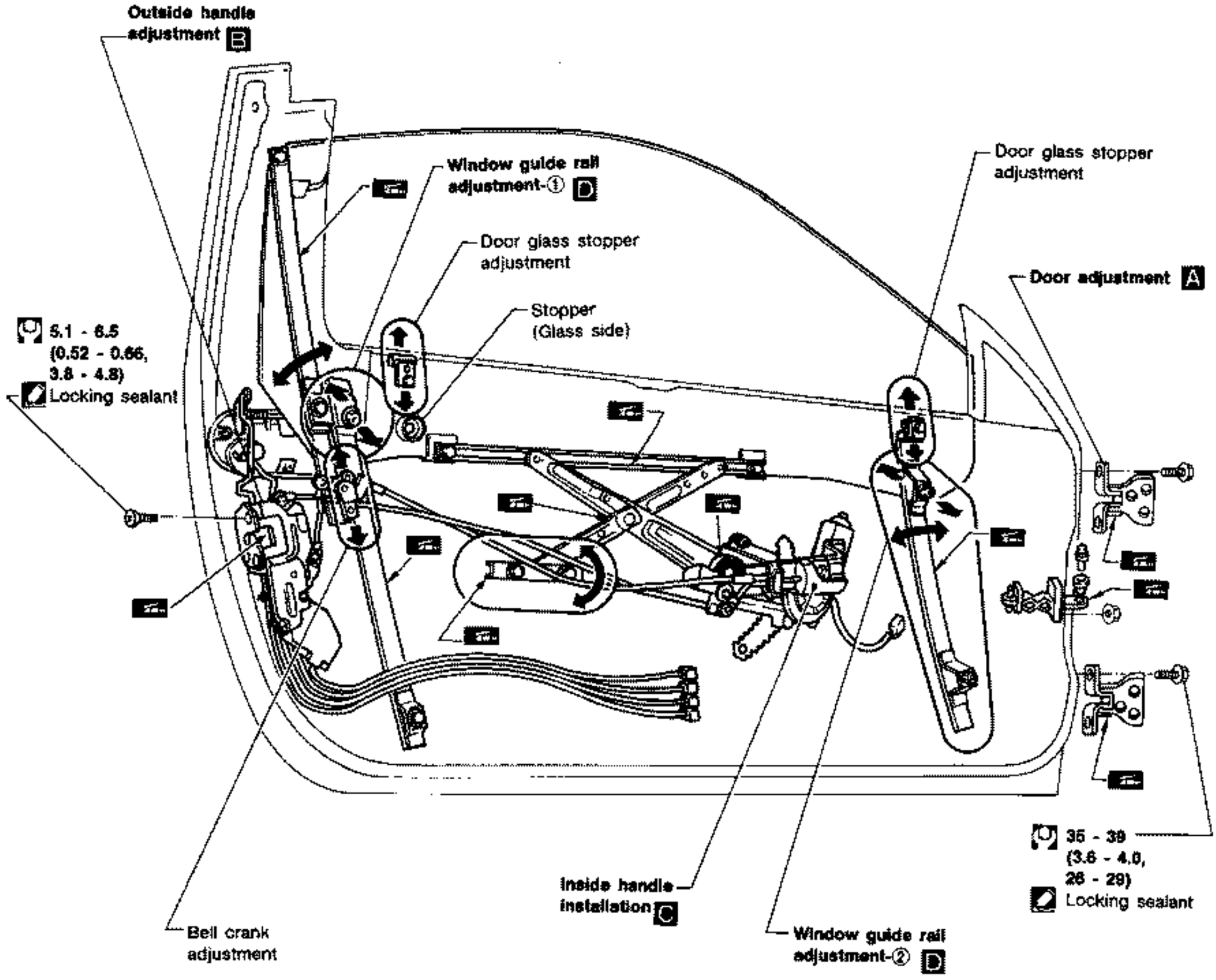

: N·m (kg-m, ft-lb)

A

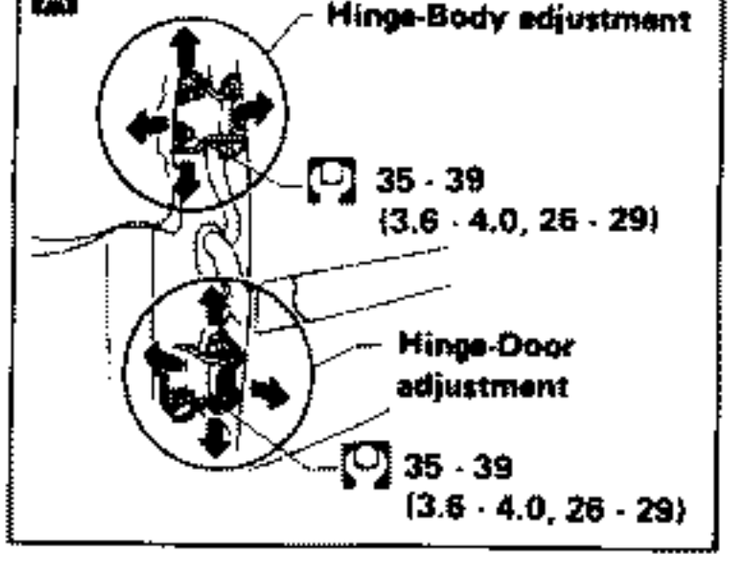

B

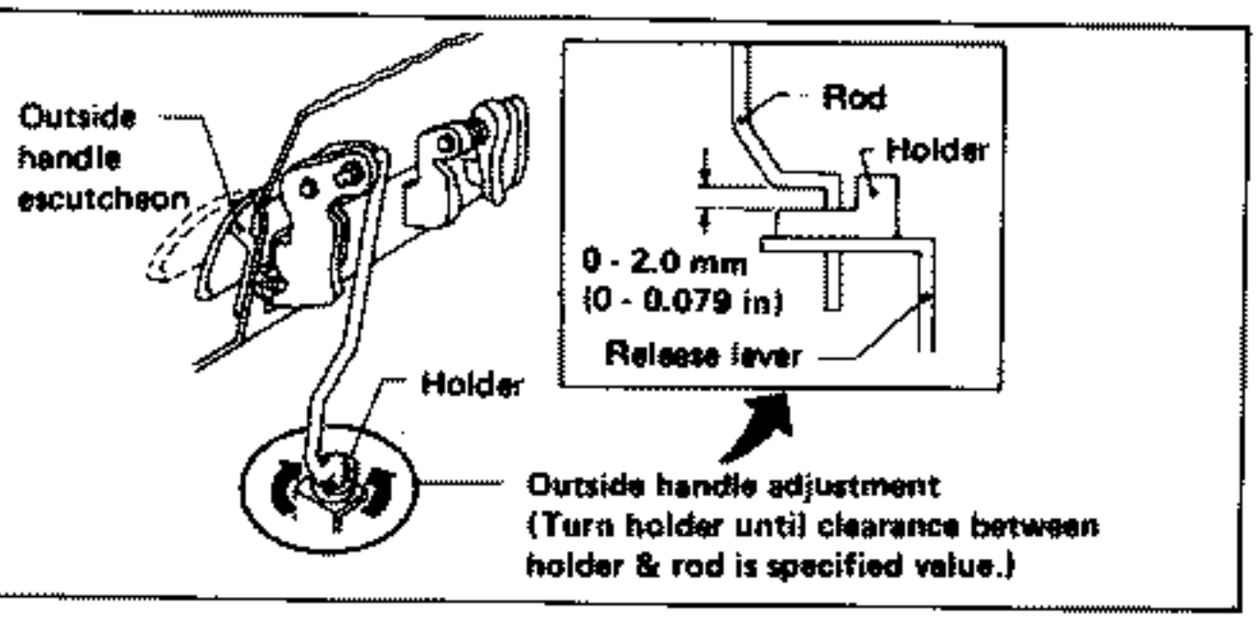

C

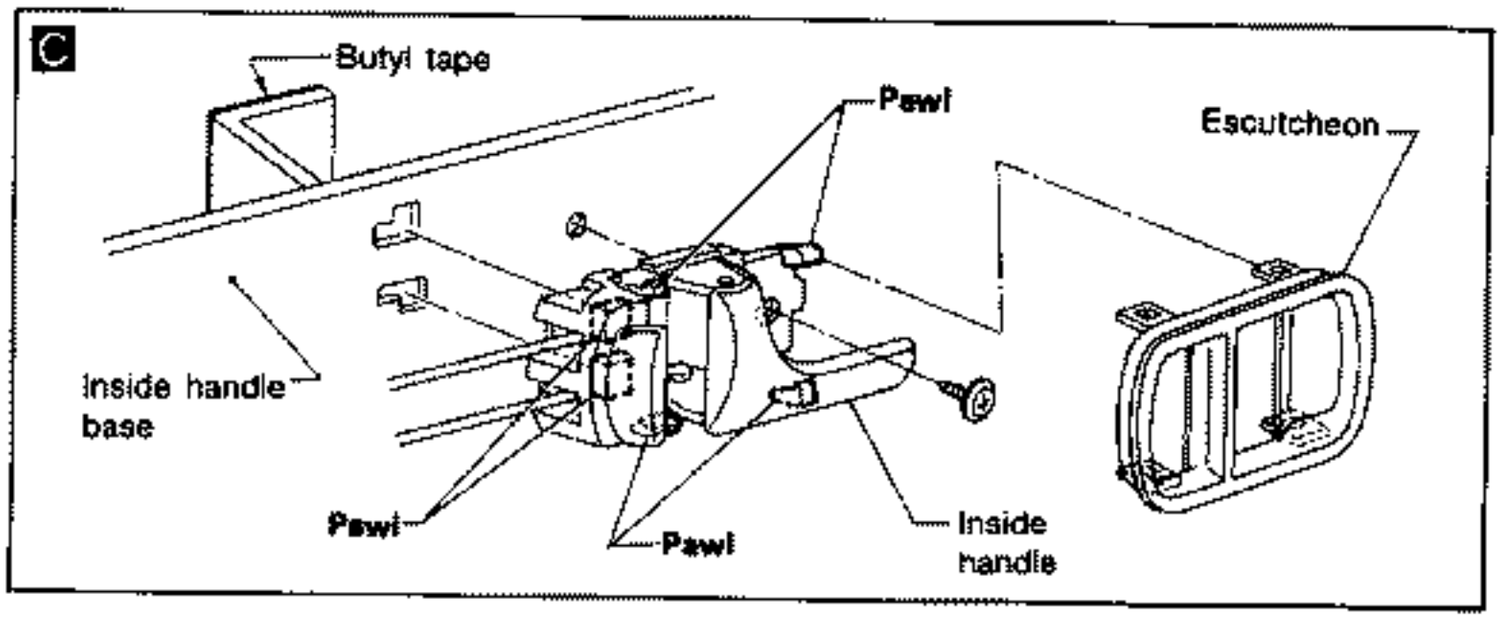

D

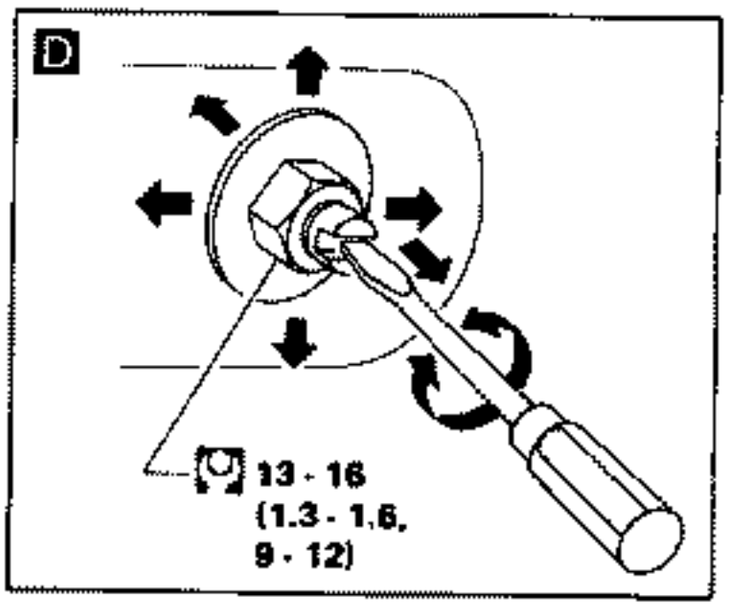

Striker adjustment

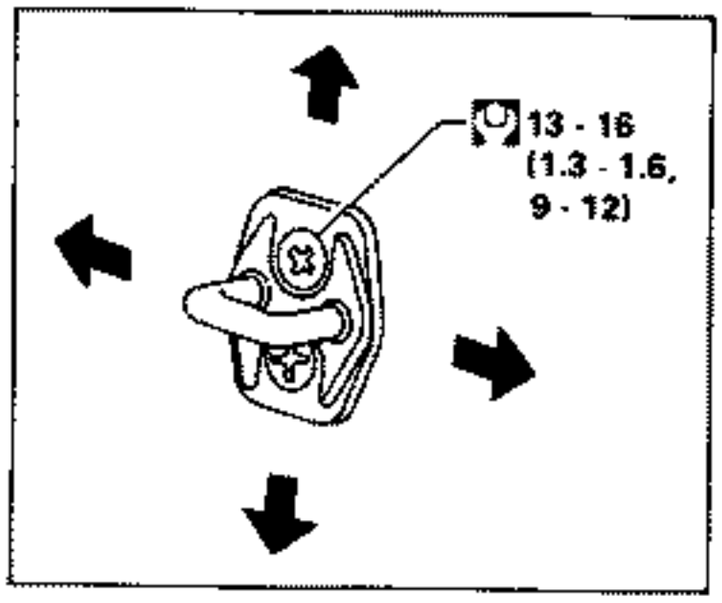

MBF026A

Power Window

WIRING DIAGRAM

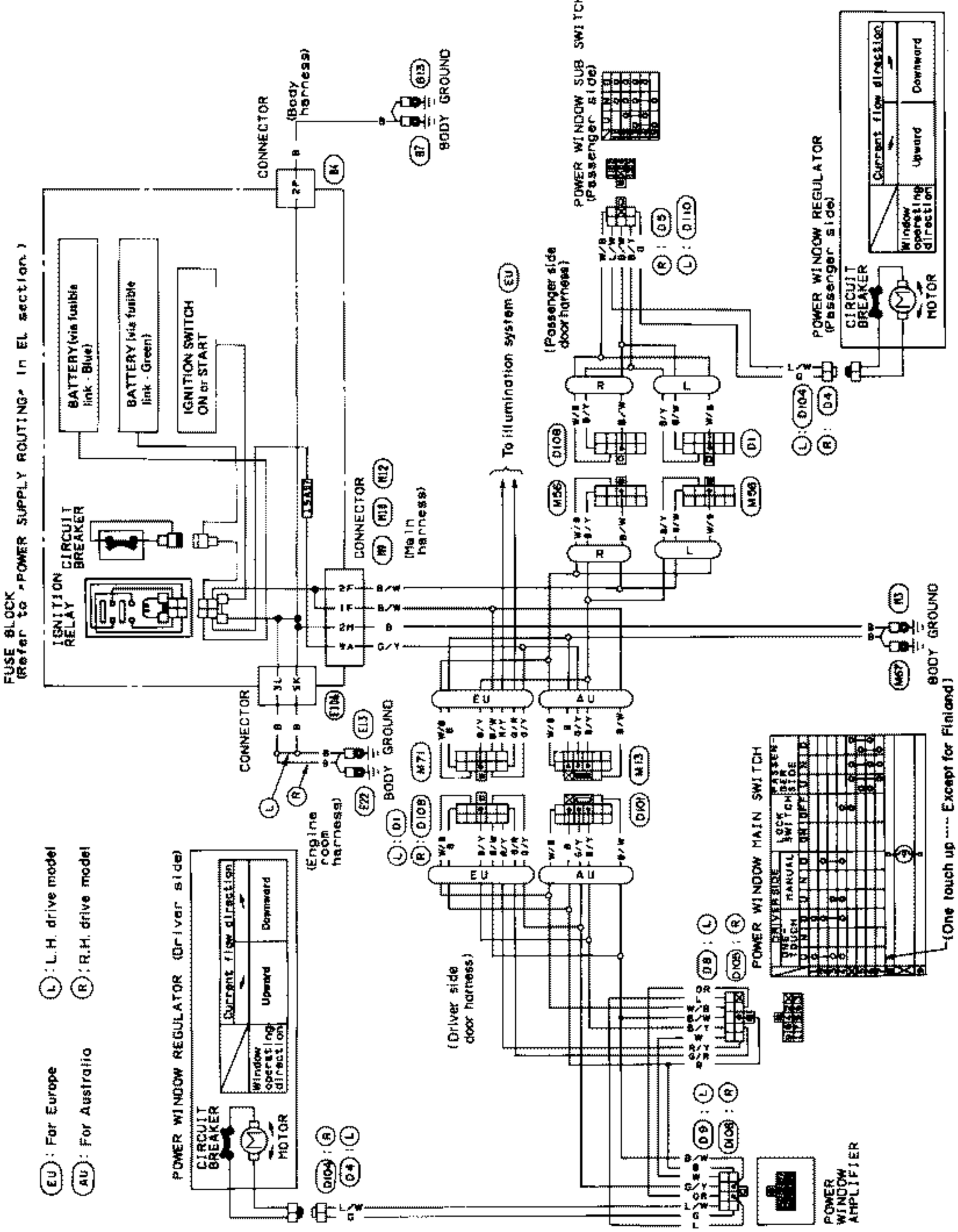

SBF630F

Power Window (Cont'd)

POWER WINDOW AMP. INSPECTION

FRONT DRIVER SIDE POWER WINDOW SWITCH

	FR Drive side						Connections
	One-touch (Auto)			Manual			
	U	N	D	U	N	D	
1	○		○				From power window AMP (28)
2			○			○	From power window AMP (22)
3	○			○			From power window AMP (21)
4	○		○	○		○	Ground

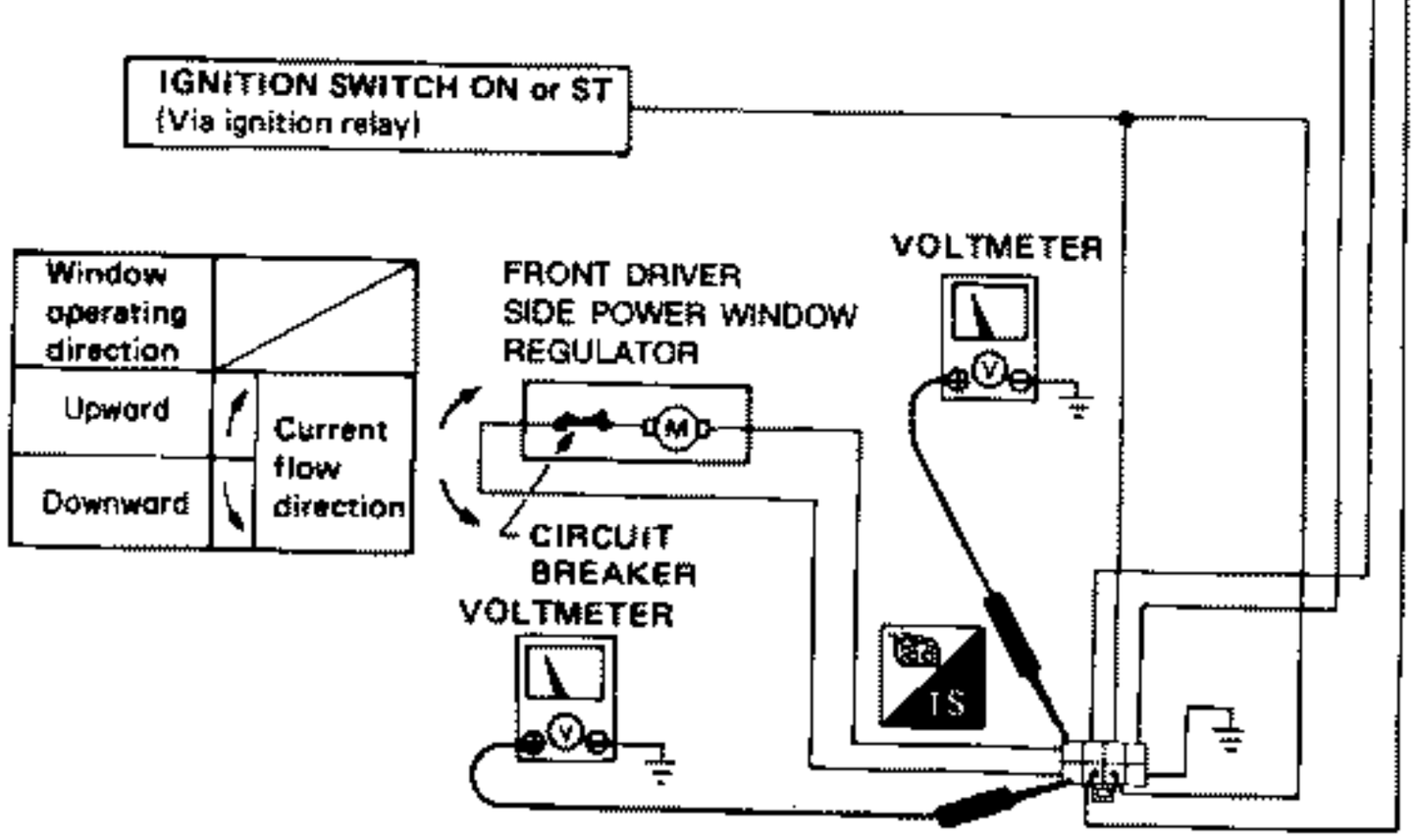

AMP. OPERATION

	Connections		Operations							
			Manual operation			One-touch (Auto) Operation				
24	Power source (IGN)		12V	12V	12V	12V	12V	12V	12V	12V
27	Ground		Ground	Ground	Ground	Ground	Ground	Ground	Ground	Ground
23	Input signal	From ignition SW (ON or ST)	ON or ST	ON or ST	ON or ST	ON or ST	ON or ST	ON or ST	ON or ST	ON or ST
28	Input signal	To FR driver side power window SW (AUTO) ①	OFF	OFF	OFF	OFF	ON	OFF	ON	OFF
21	Input signal	To FR driver side power window SW (UP) ③	OFF	ON	OFF	OFF	ON	OFF	OFF	OFF
22	Input signal	To FR driver side power window SW (DOWN) ②	OFF	OFF	ON	OFF	OFF	OFF	ON	OFF
25	Output signal	FR driver side regulator ("Up" power source)	Approx. 0V	Approx. over 9V	Approx. 0V	Approx. 0V	Approx. over 9V	Approx. over 9V	Approx. 0V	Approx. 0V
26	Output signal	FR driver side regulator ("Down" power source)	Approx. 0V	Approx. 0V	Approx. over 9V	Approx. 0V	Approx. 0V	Approx. 0V	Approx. over 9V	Approx. over 9V

Regulator Operating Condition	Stop	Upward operation	Downward operation	Stop	Starting	Keeps operating until fully close, then stops automatically.	Starting	Keeps operating until fully open, then stops automatically
					Upward operation (※)		Downward operation	

Carry out this operation check in this chart from left to right.

POWER WINDOW AMP. — Front driver side door (Behind door trim)

(※) Except for Finland

SBF831F

Power Door Lock

WIRING DIAGRAM

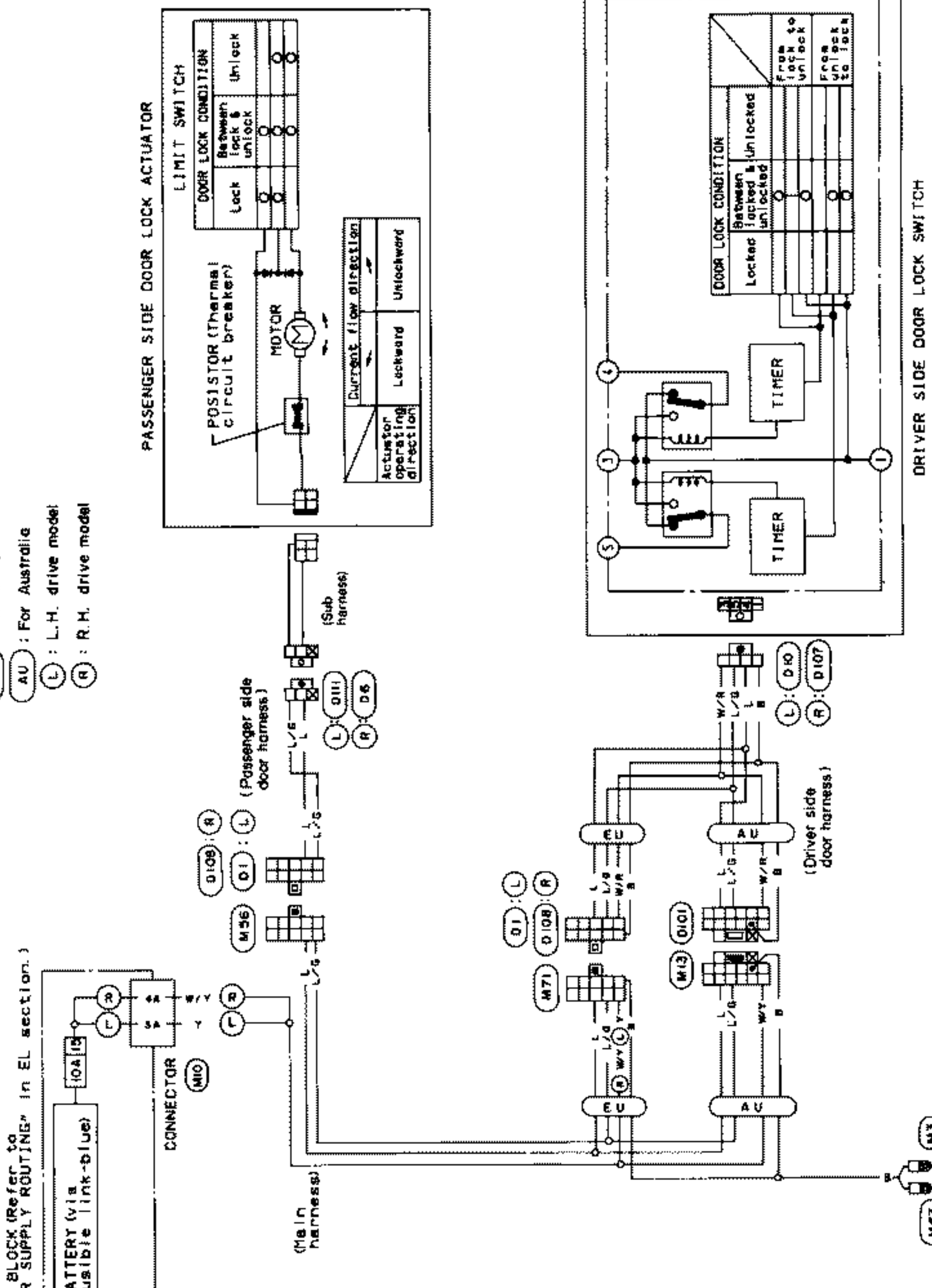

NOTE

- When removing instrument panel assembly, remove defroster grille, combination meter, cluster lid and radio first.

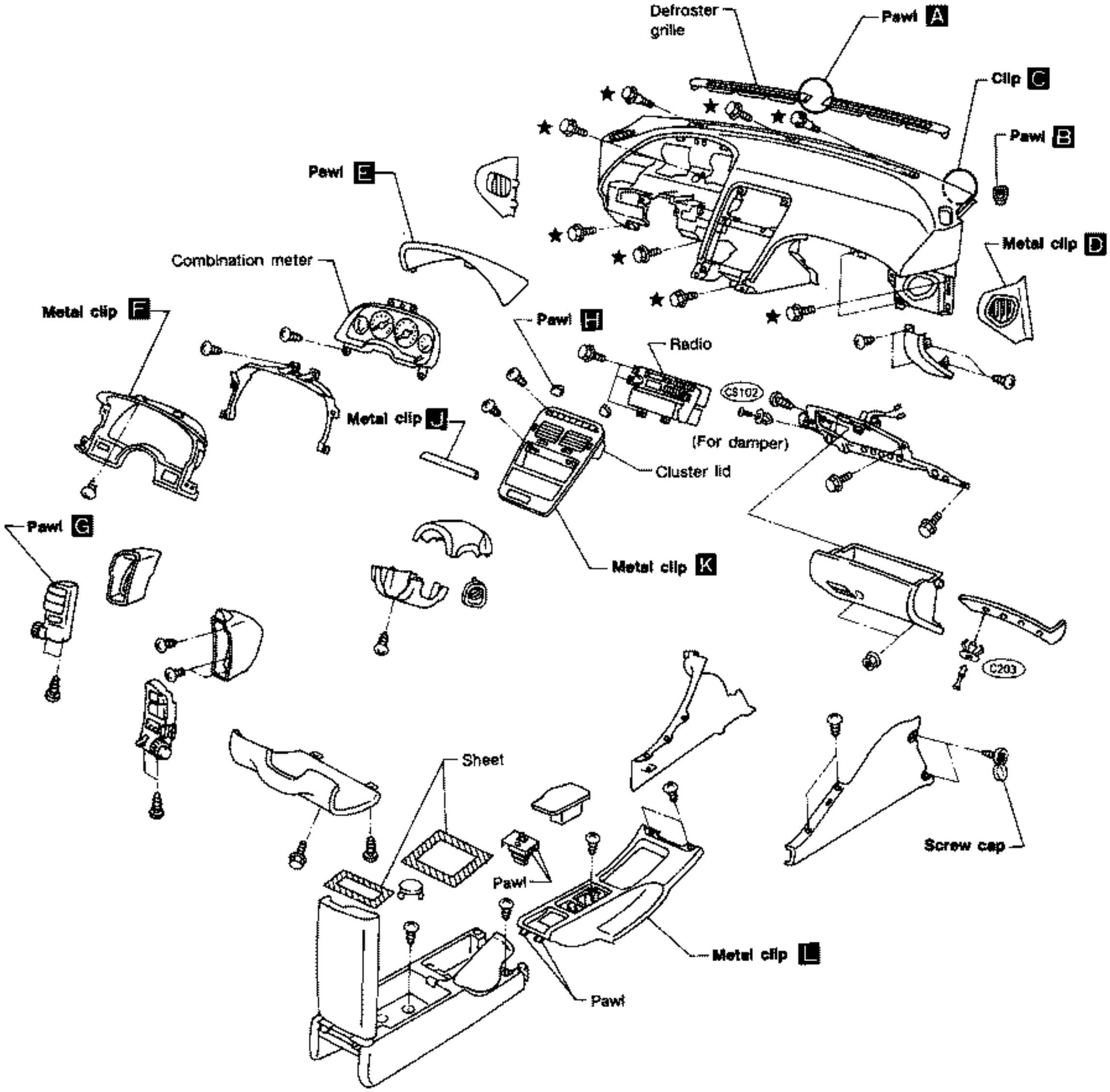

: Double-faced adhesive tape

★ : Instrument panel assembly mounting bolts

A

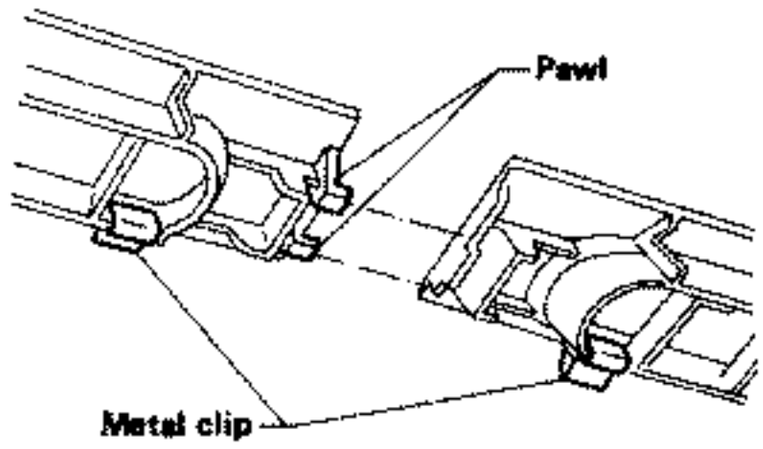

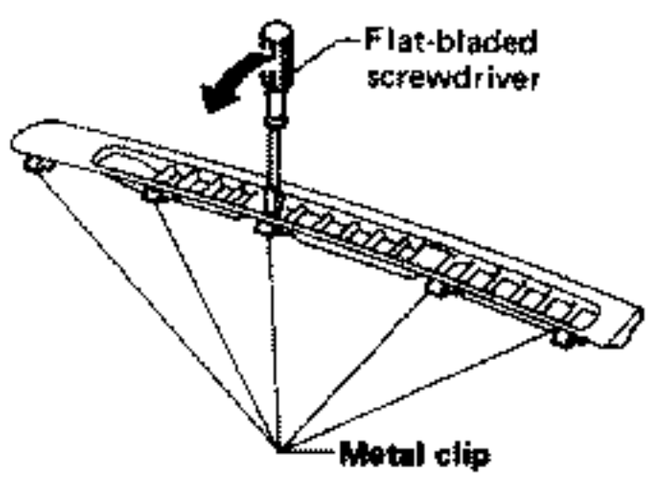

B

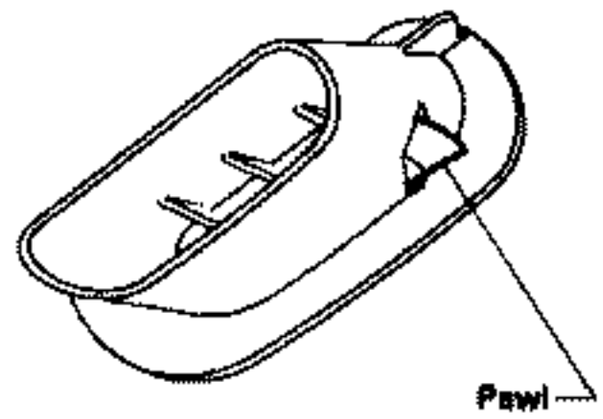

C

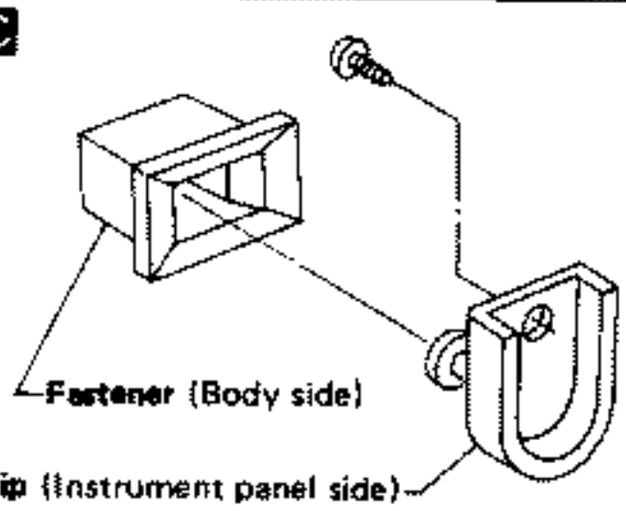

D

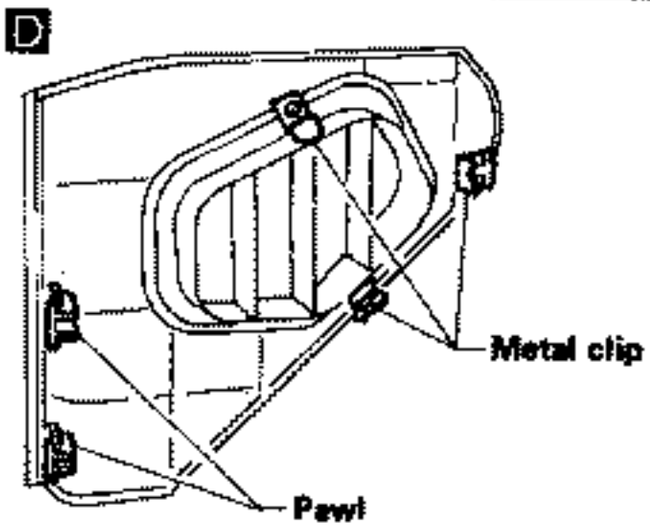

E

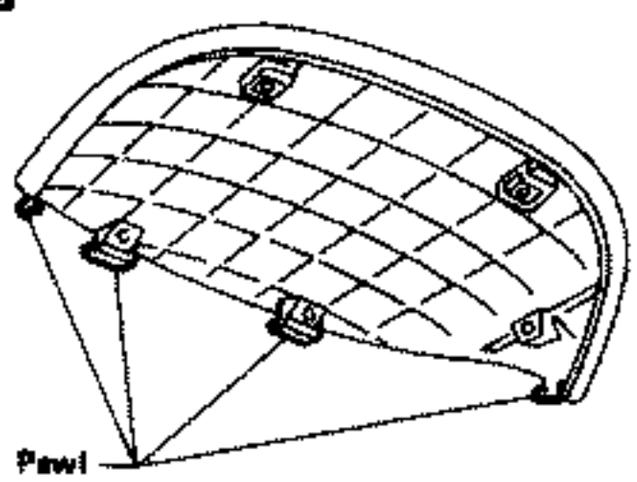

F

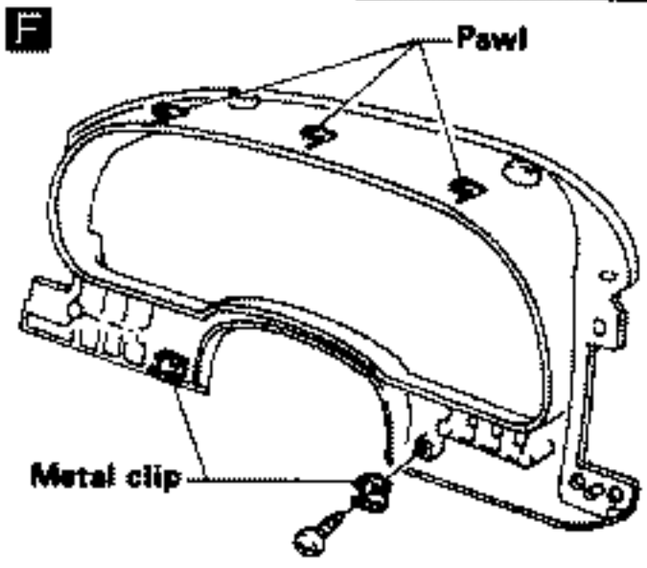

G

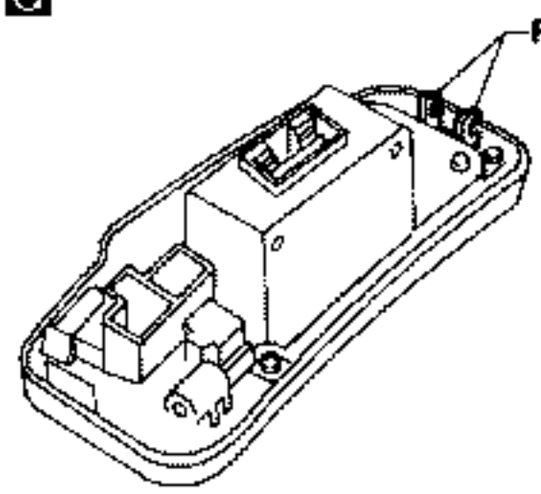

H

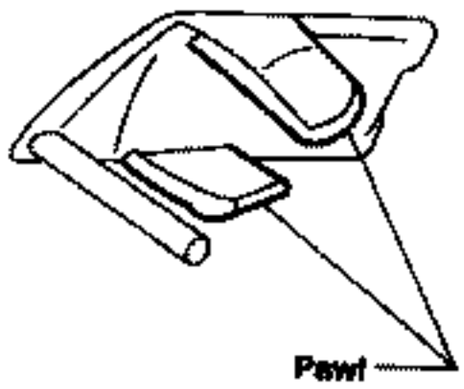

J

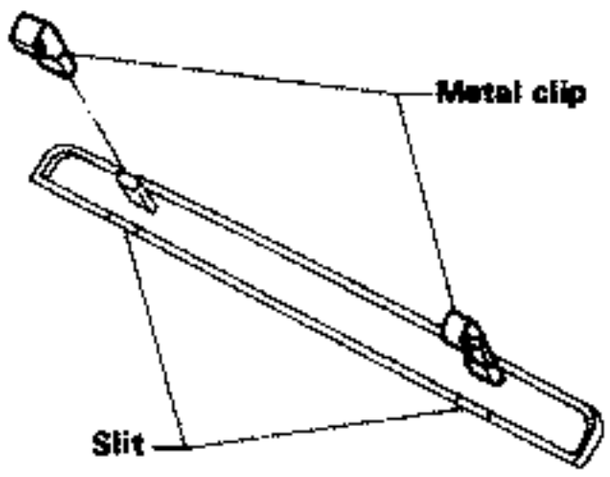

K

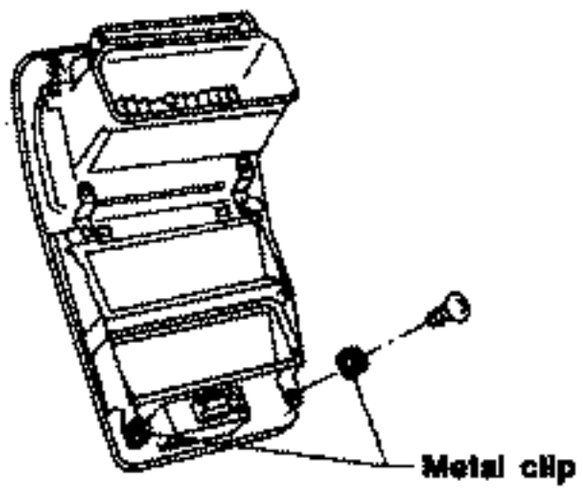

L

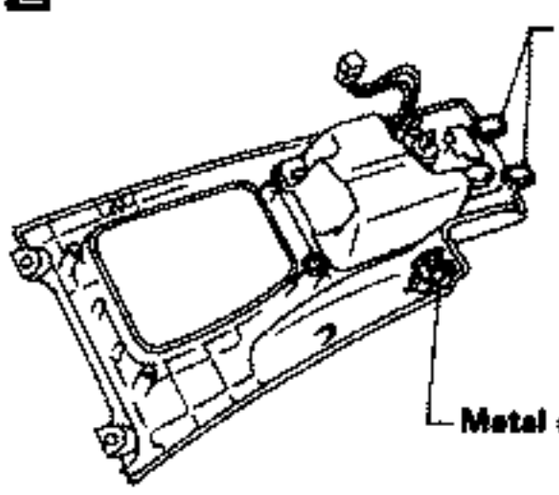

MBF027A

Interior

SIDE, LUGGAGE AND FLOOR TRIM

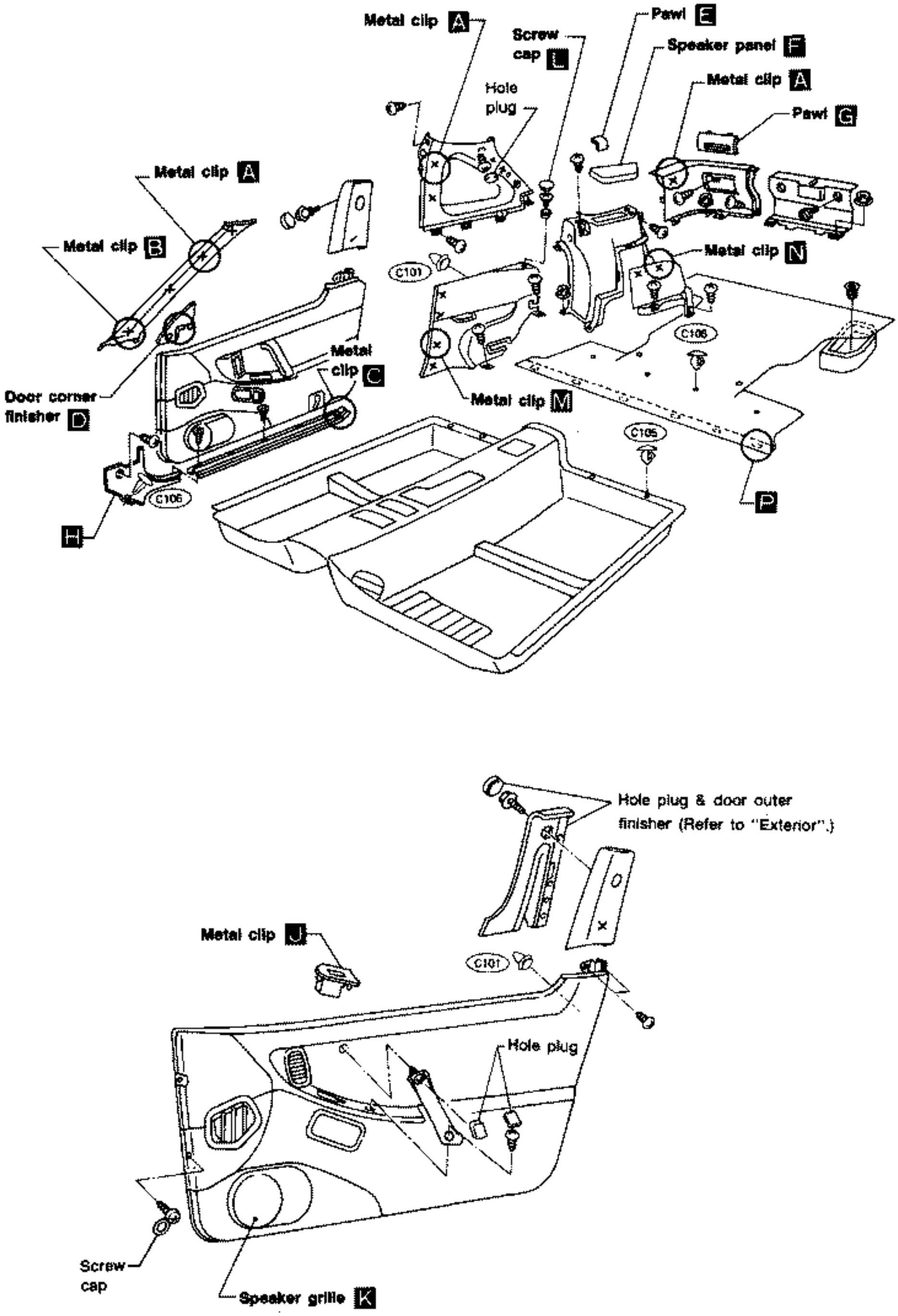

Interior (Cont'd)

A

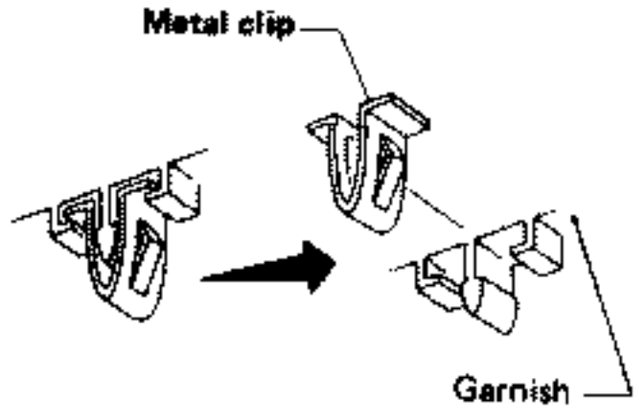

B

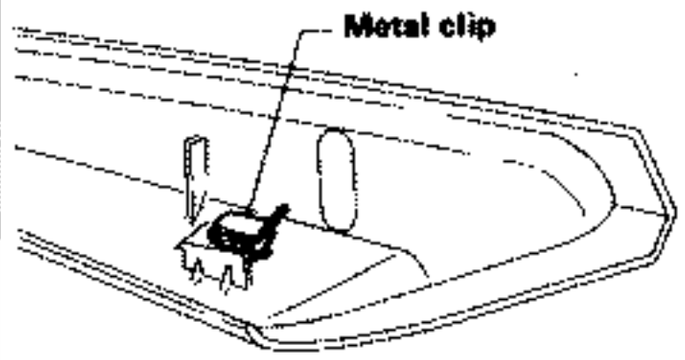

C

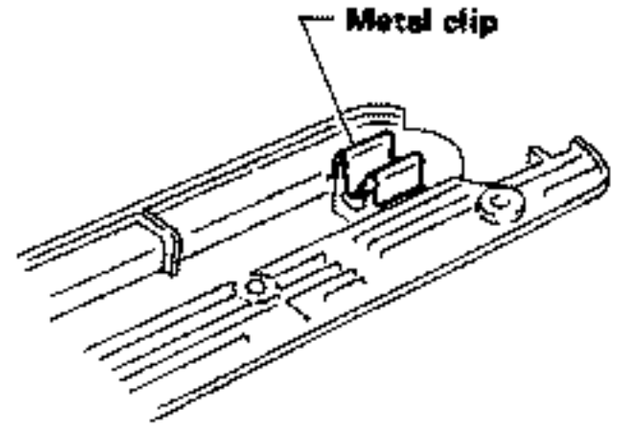

D

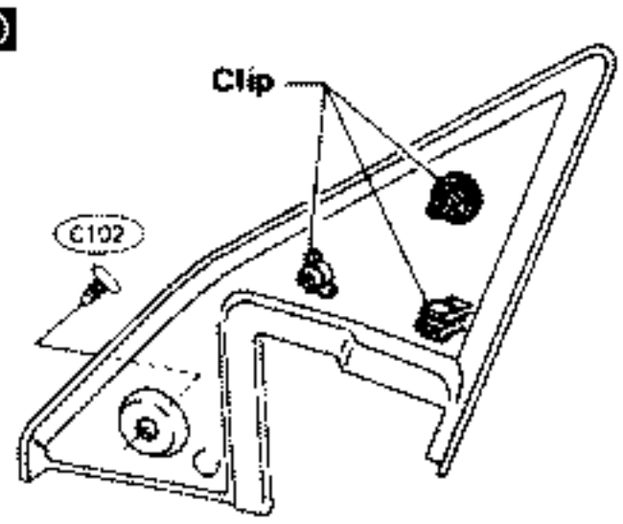

E

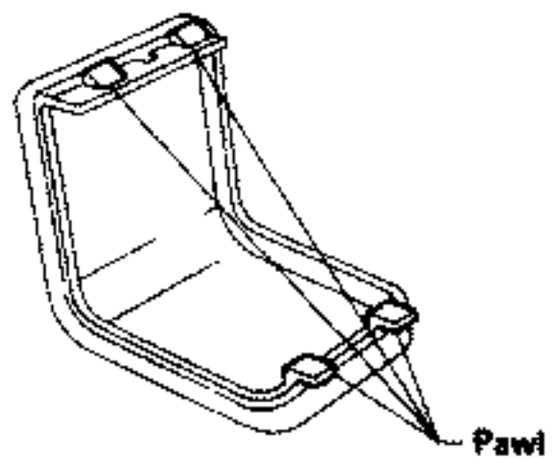

F

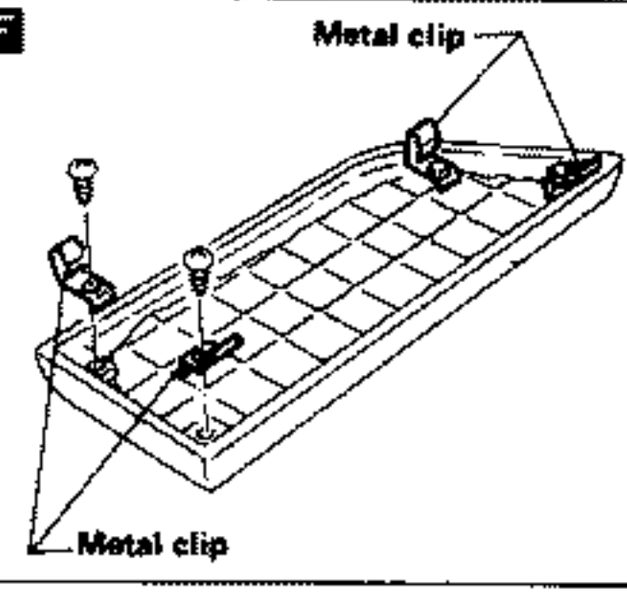

G

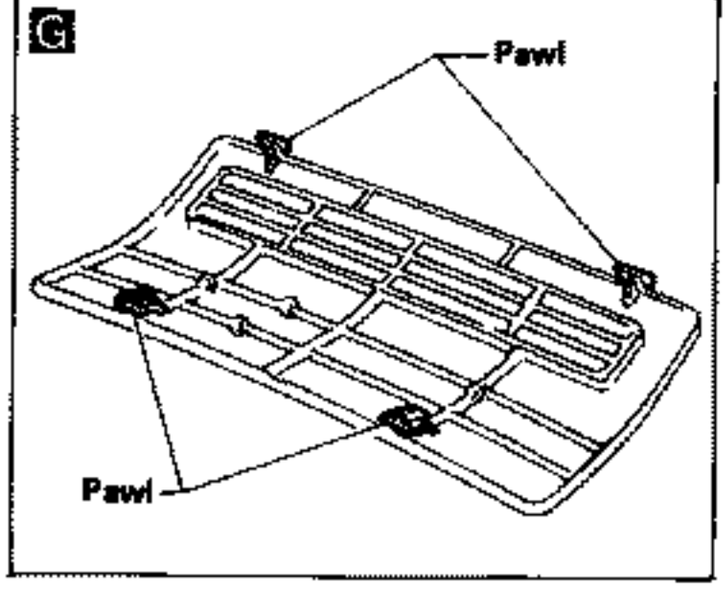

H L.H. side (L.H.D. model)

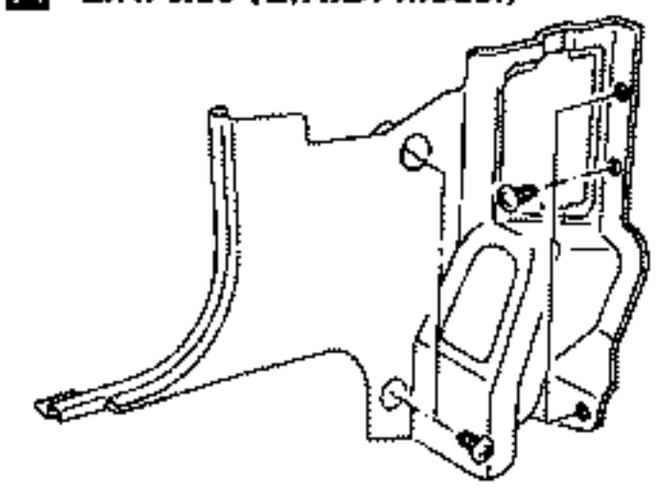

K

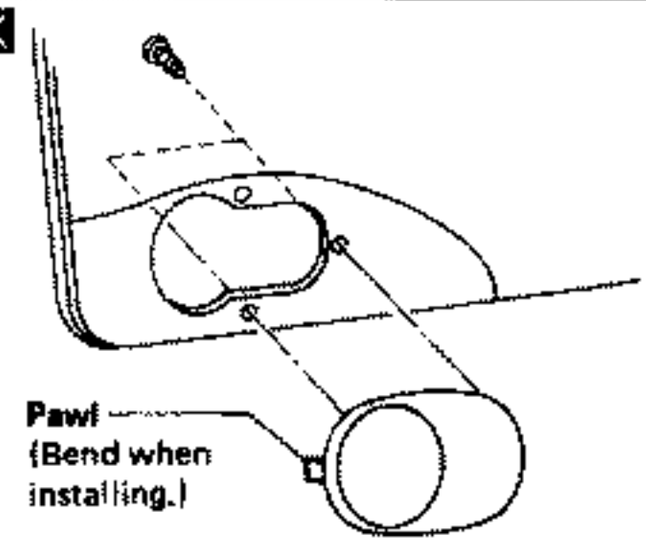

J Passenger's side

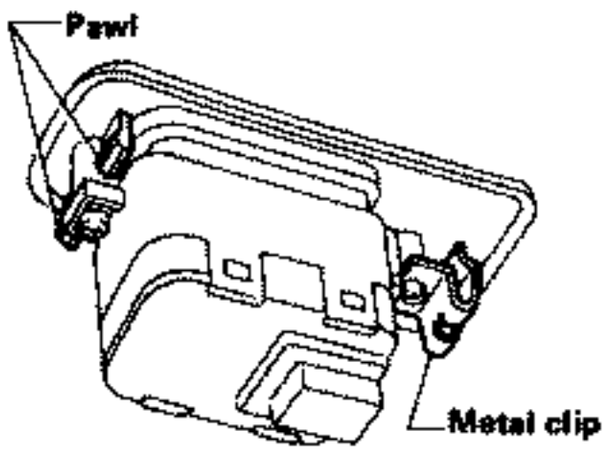

Driver's side

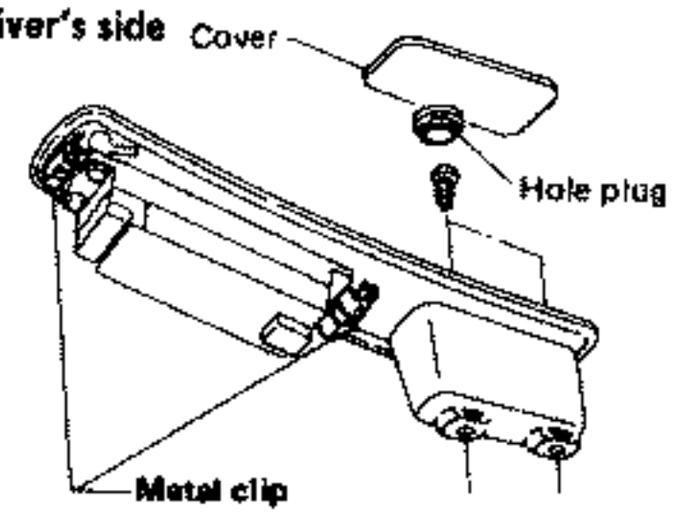

L

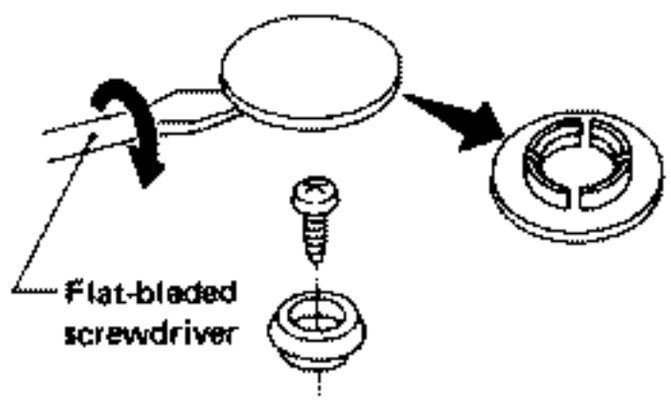

M

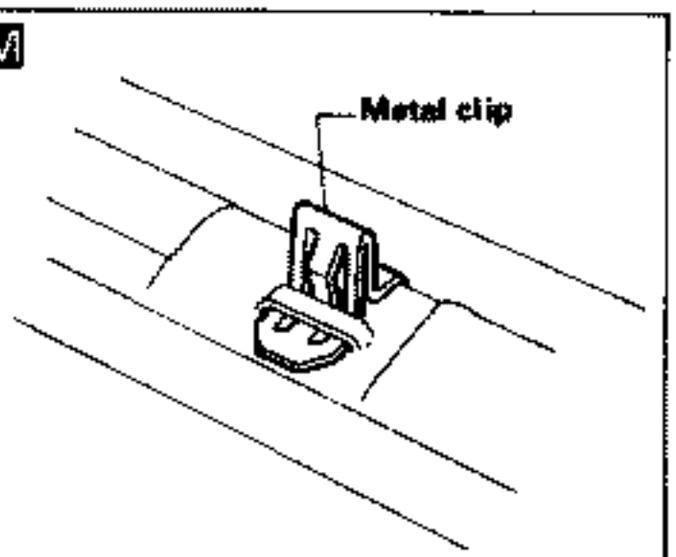

N

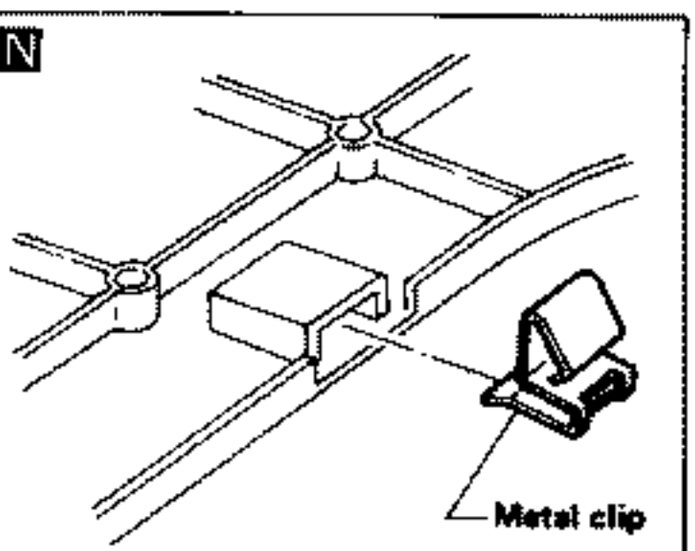

P

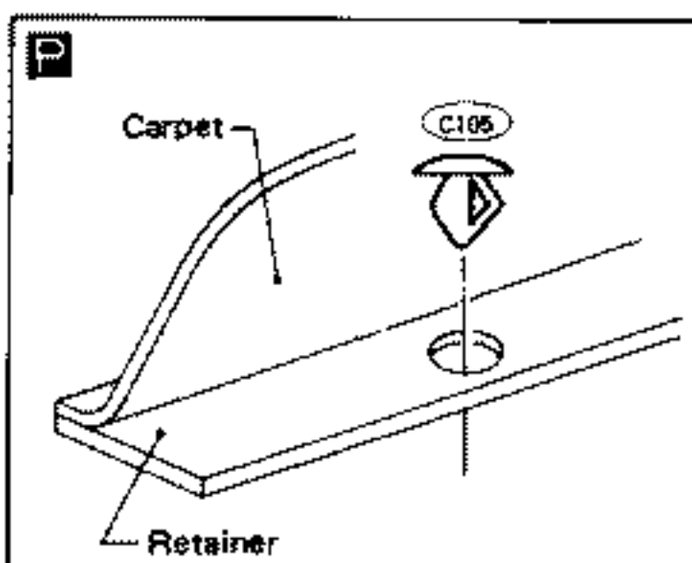

MBF028A

Interior (Cont'd)

BACK DOOR TRIM

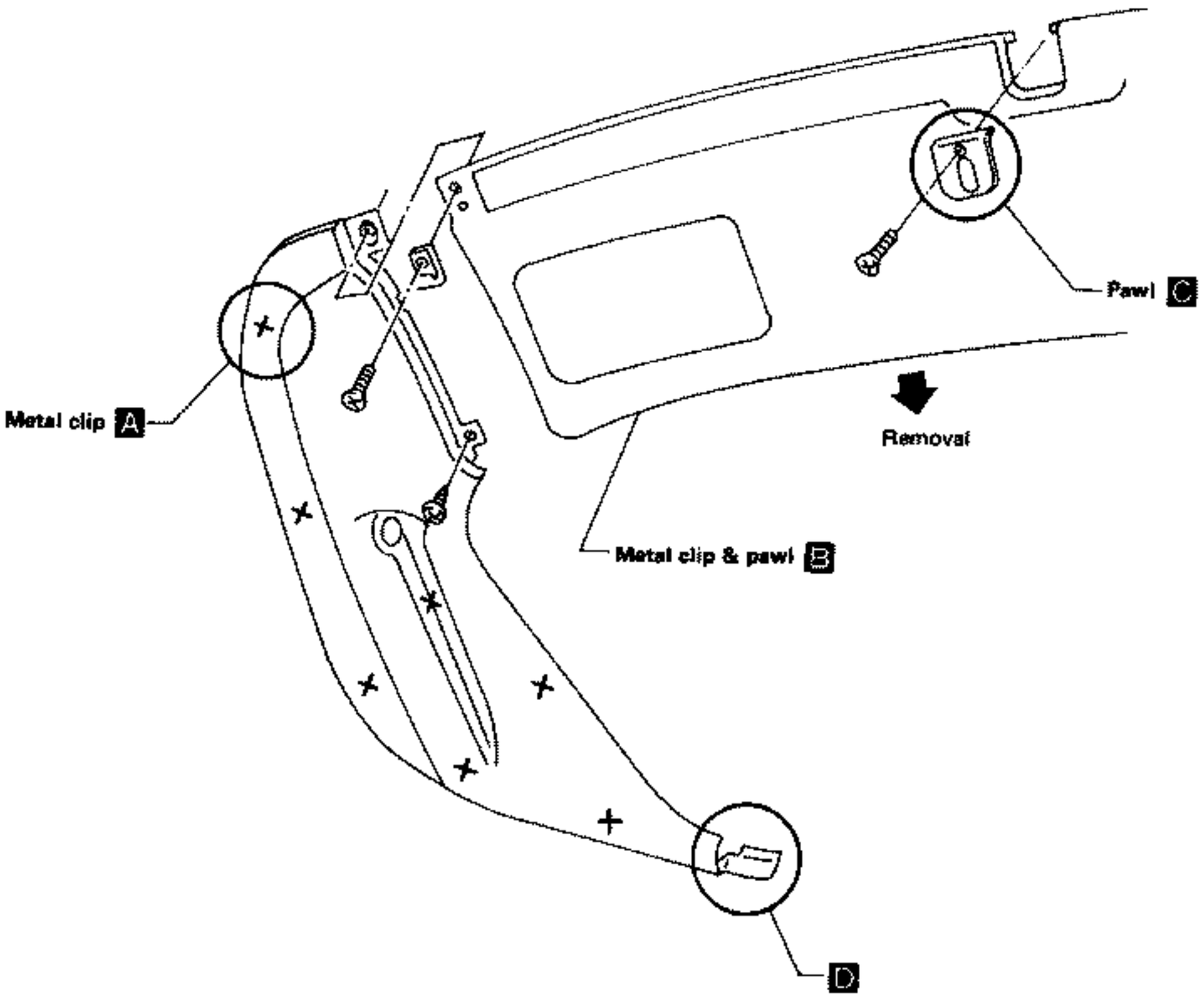

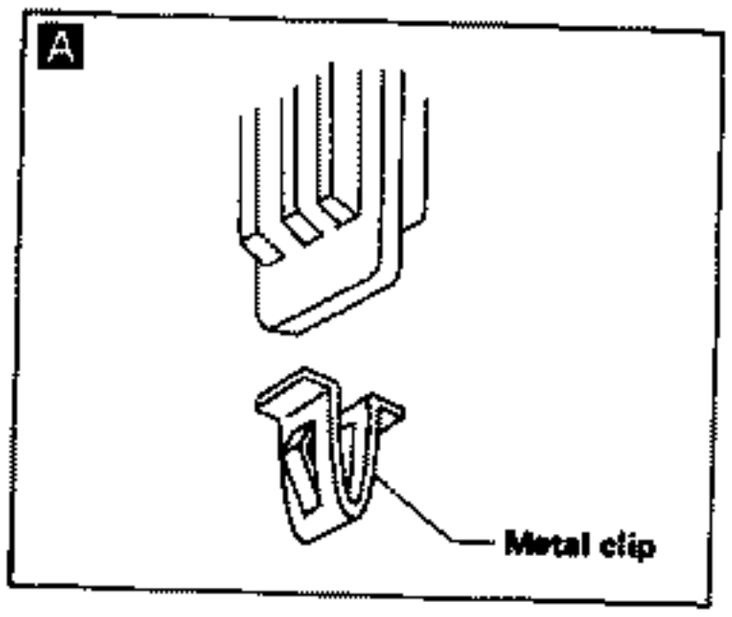

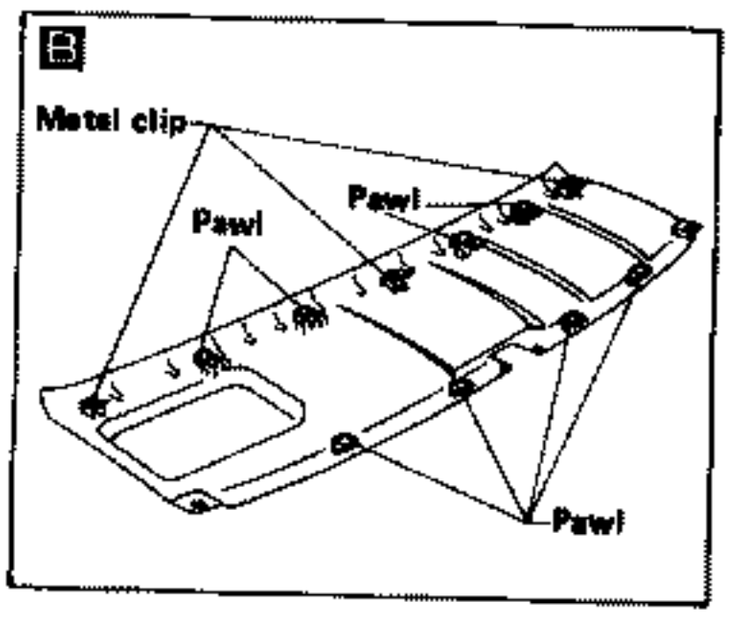

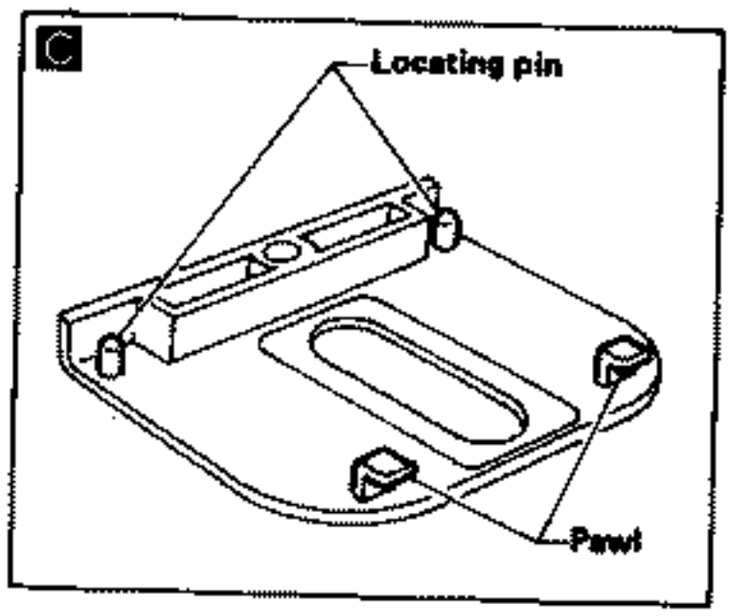

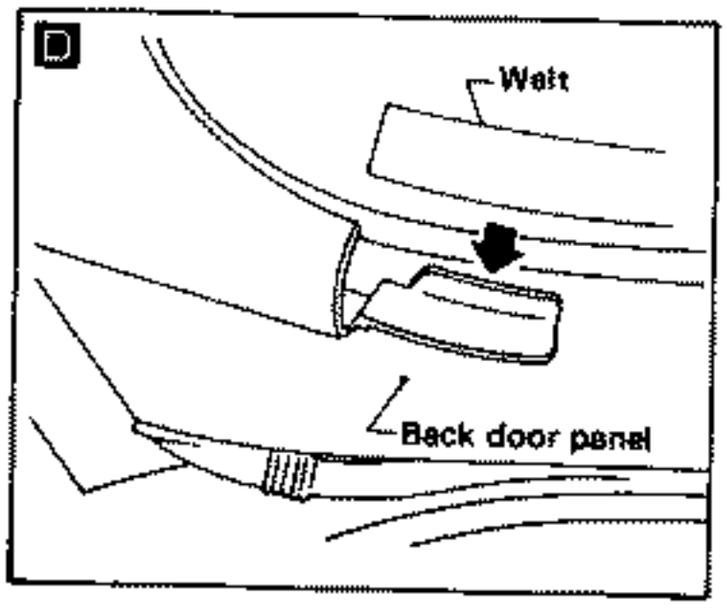

SBF861E

Interior (Cont'd)

ROOF TRIM

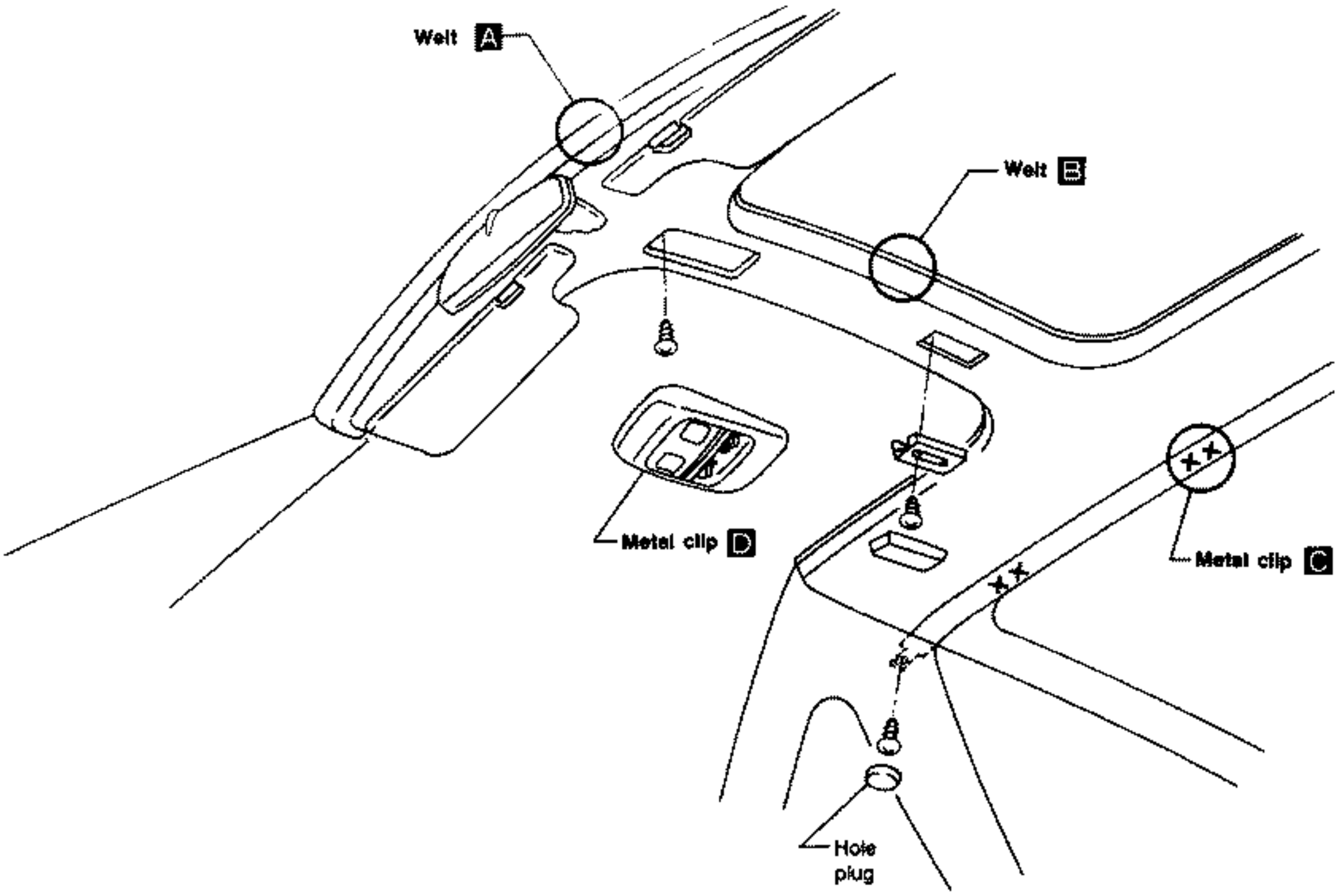

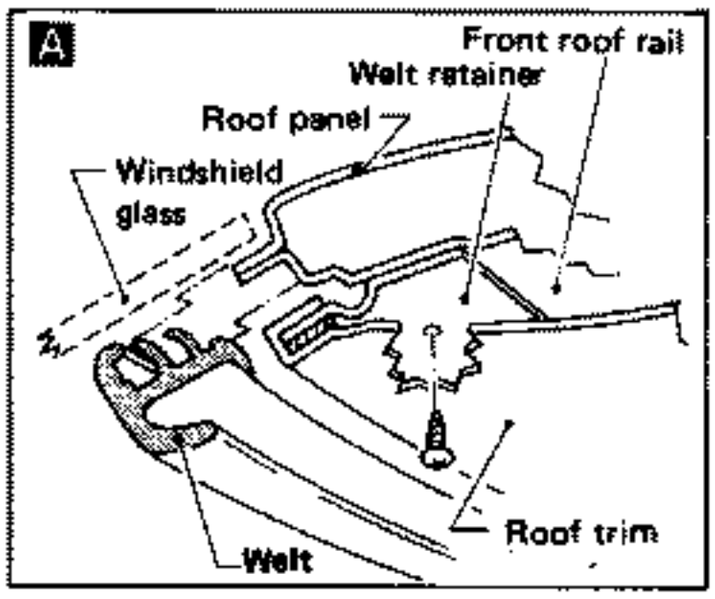

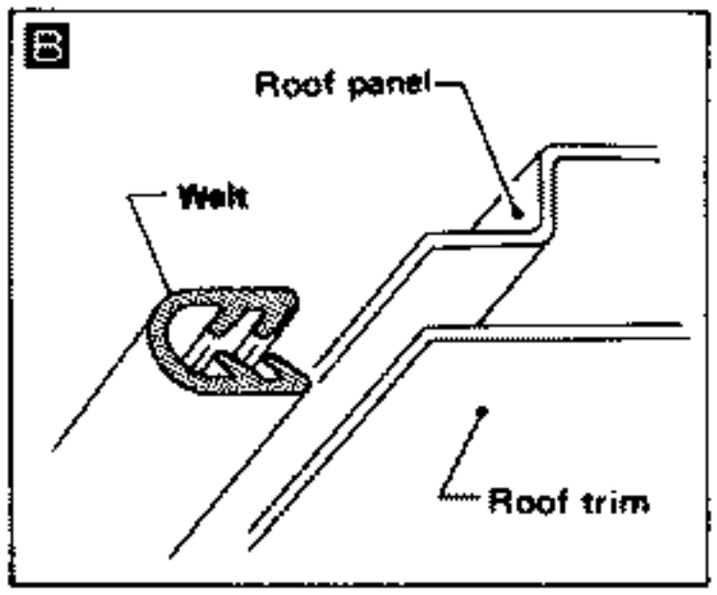

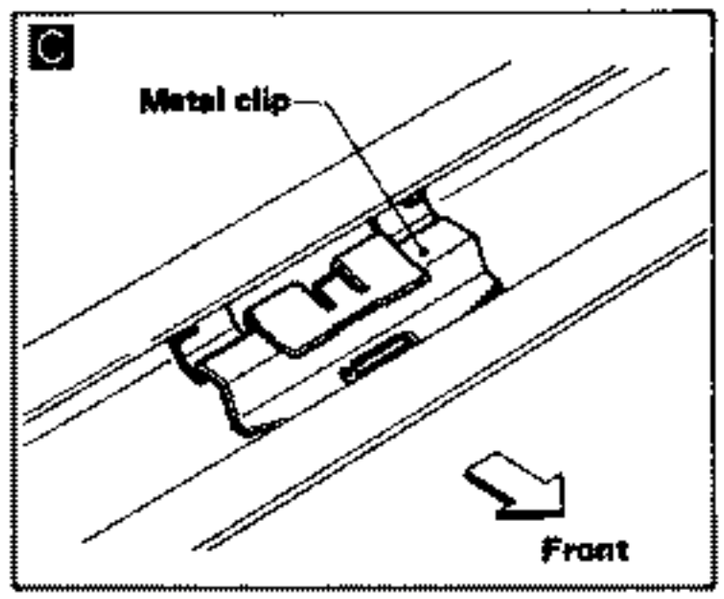

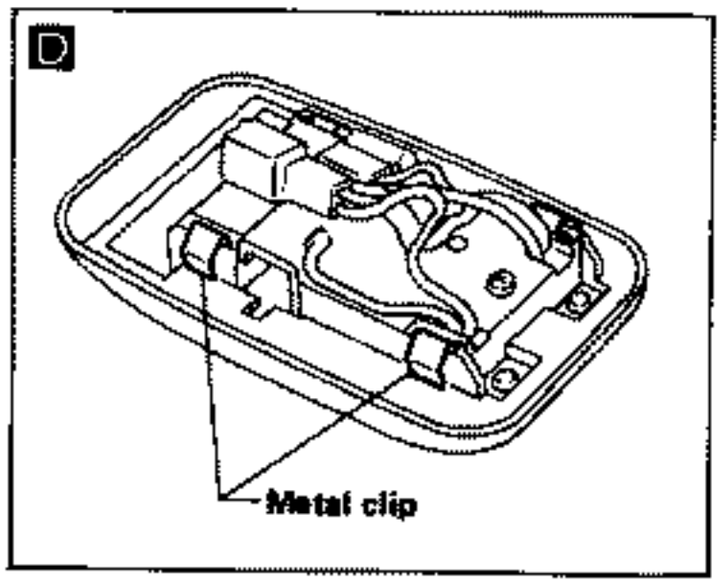

MBF029A

Exterior

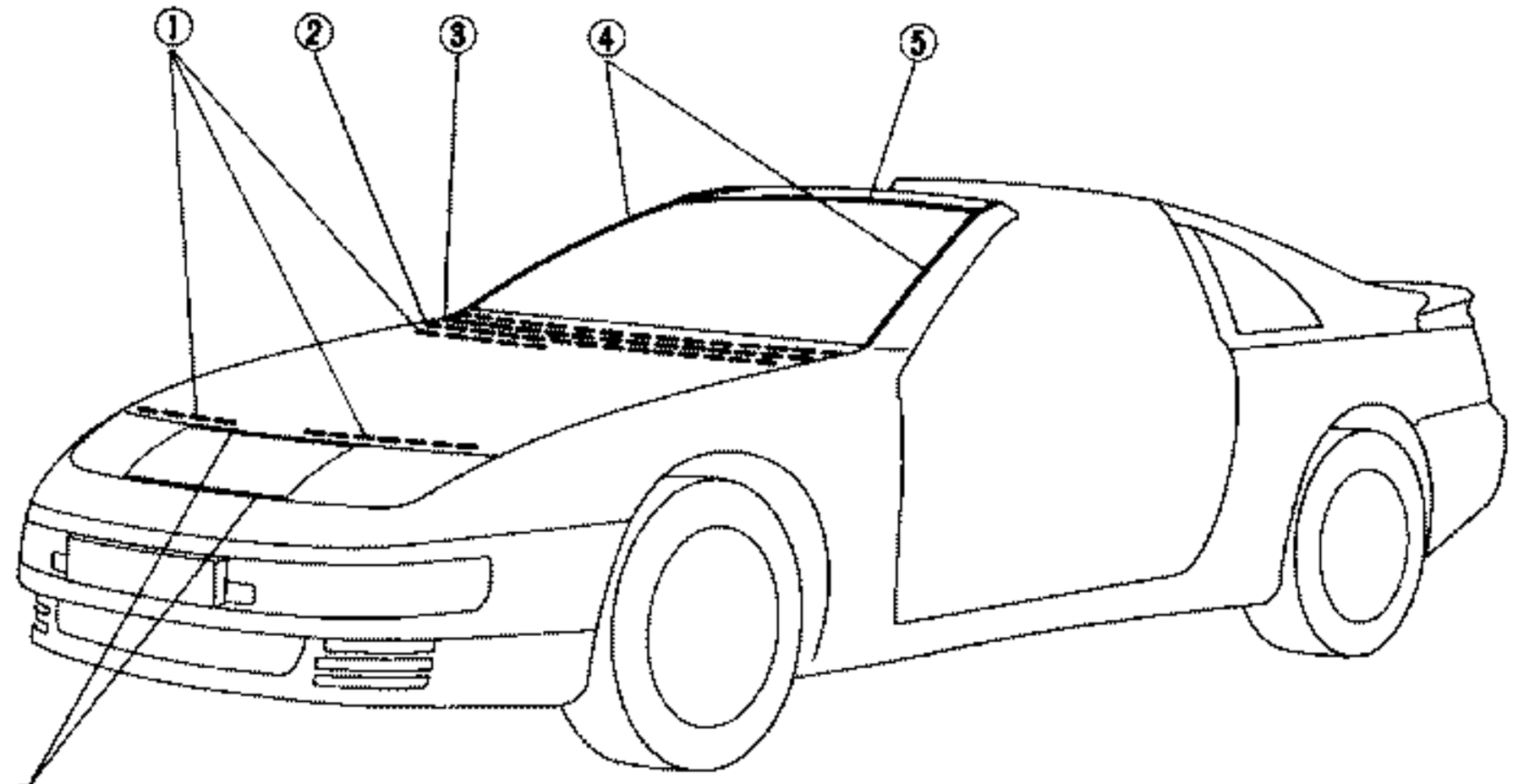

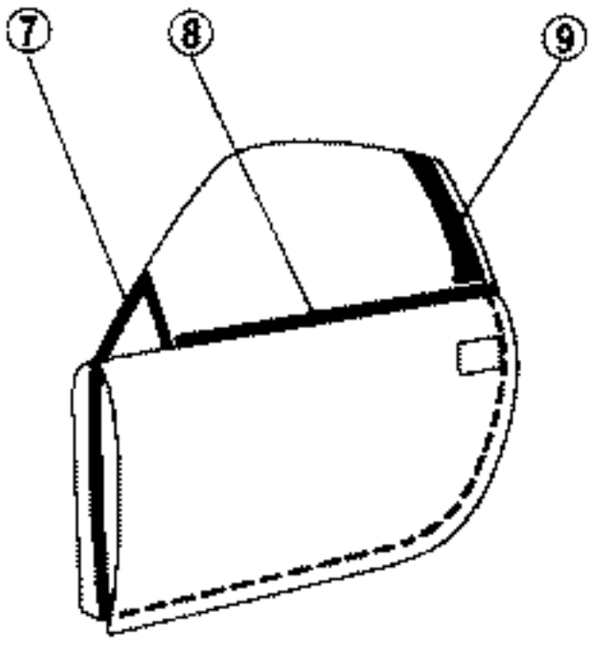

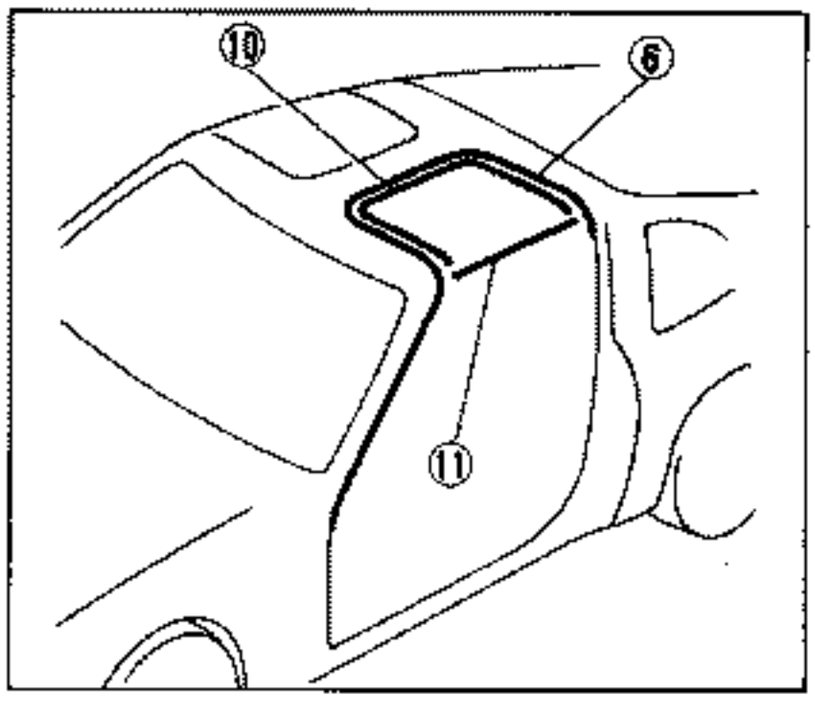

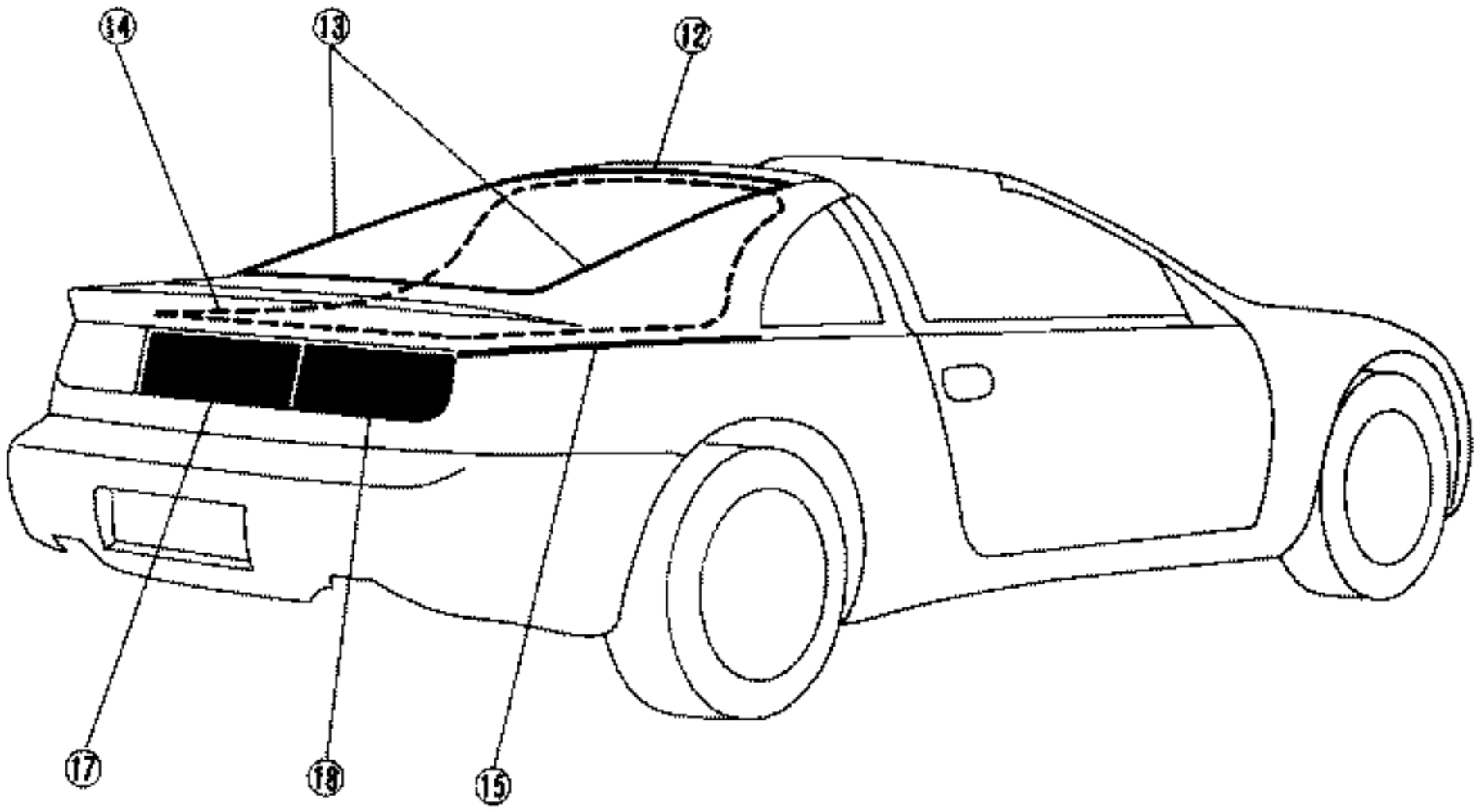

MBF030A

Exterior (Cont'd)

① Hood front and rear seal

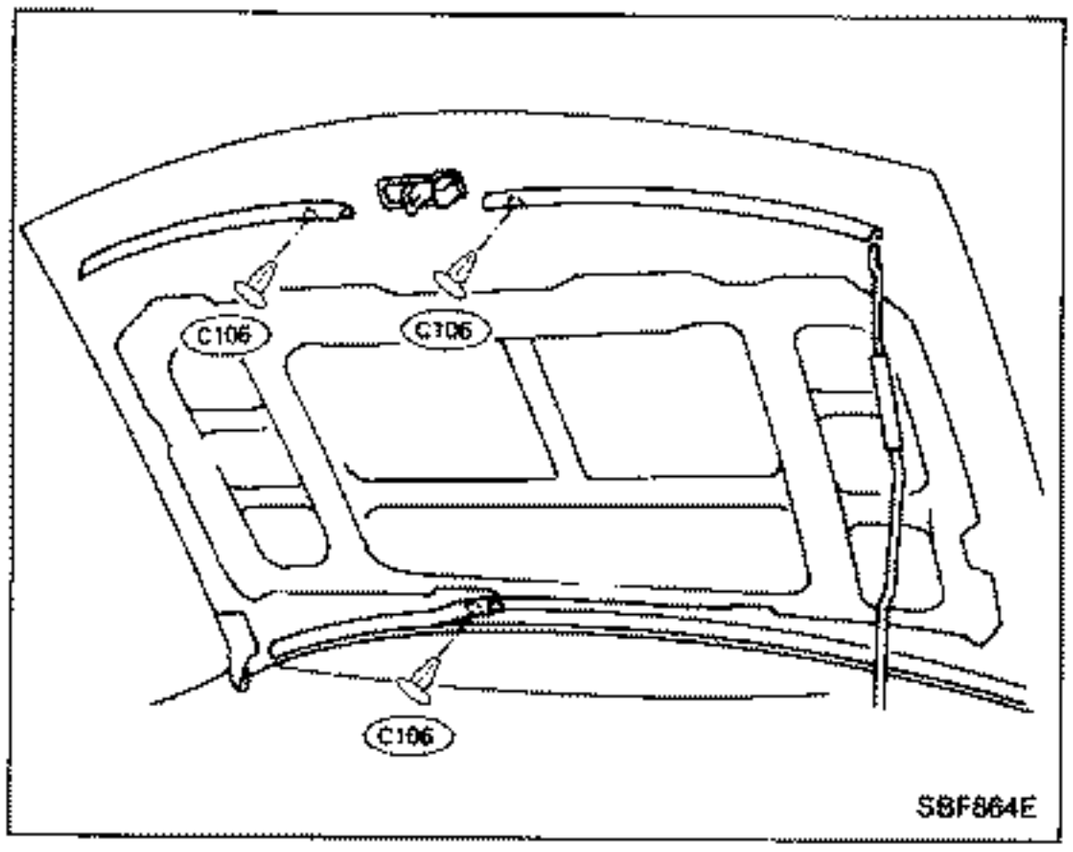

SBF864E

② ⑨ Cowl top seal and cowl top grille

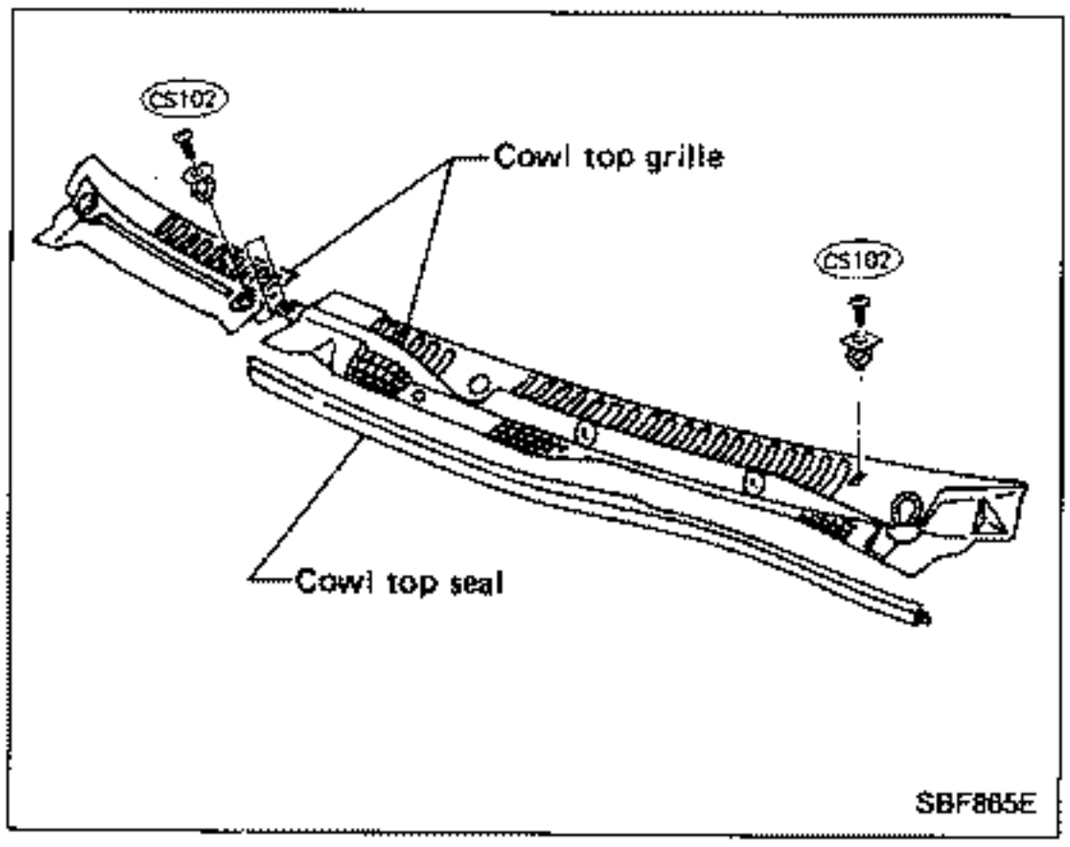

SBF865E

④ Windshield side molding

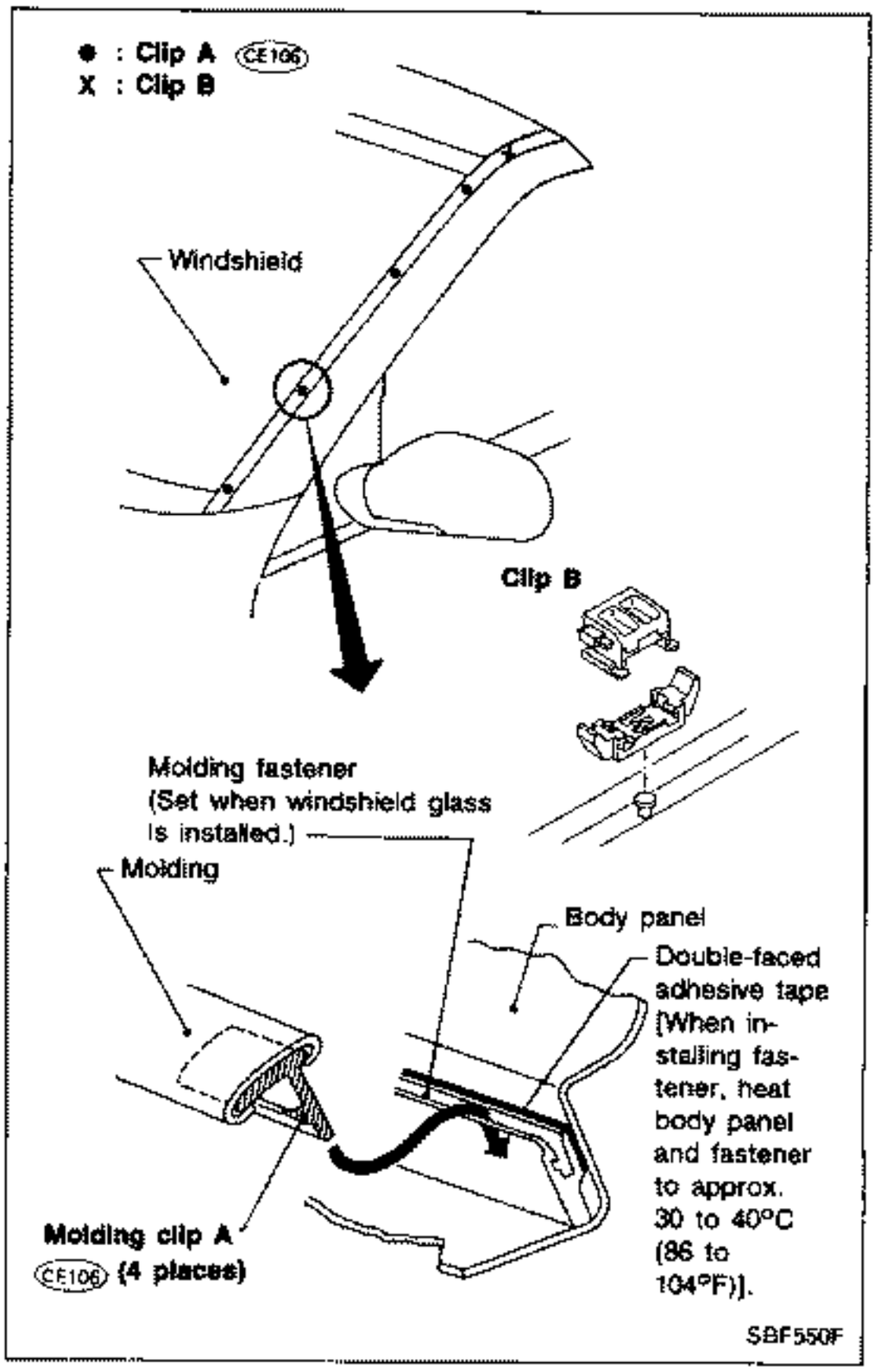

SBF550F

⑤ Windshield upper molding

Method 1

Cut off top portion of molding and clean glass and panel surfaces.

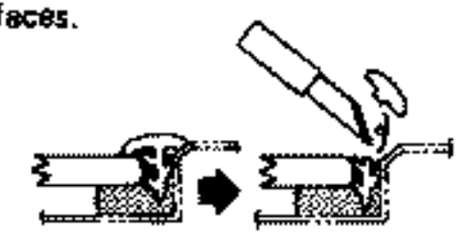

Apply sealant to top portion of molding.

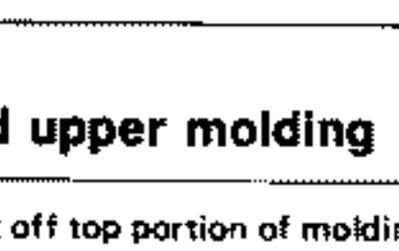

Cut off lower portion of new molding

Finish well to give it a good appearance.

Method 2

1. Cut off sealant at glass end.
2. Clean the side on which panel was mounted.
3. Set molding fastener and apply sealant & primer to body panel, and apply primer to molding.

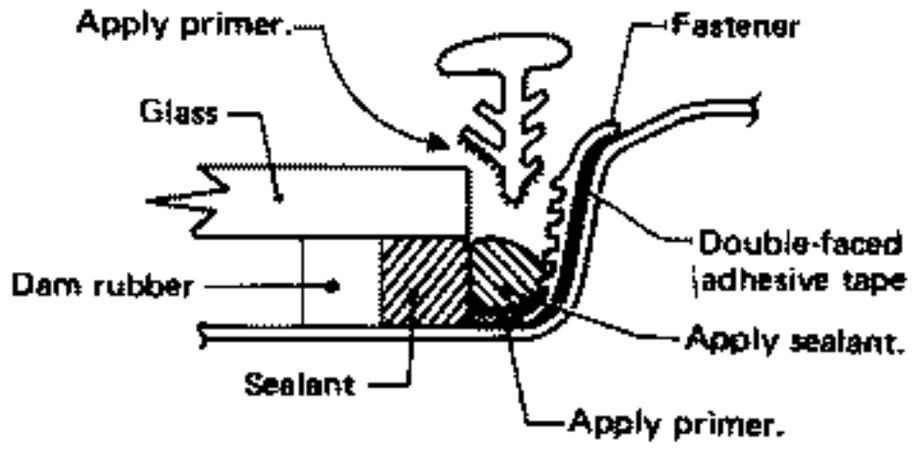

4. Install molding by aligning the molding mark located on center with vehicle center.
   Be sure to install tightly so that there is no gap around the corner.

SBF301C

Exterior (Cont'd)

⑥ Body side weatherstrip

T-bar roof model
Basically the same as the standard roof model

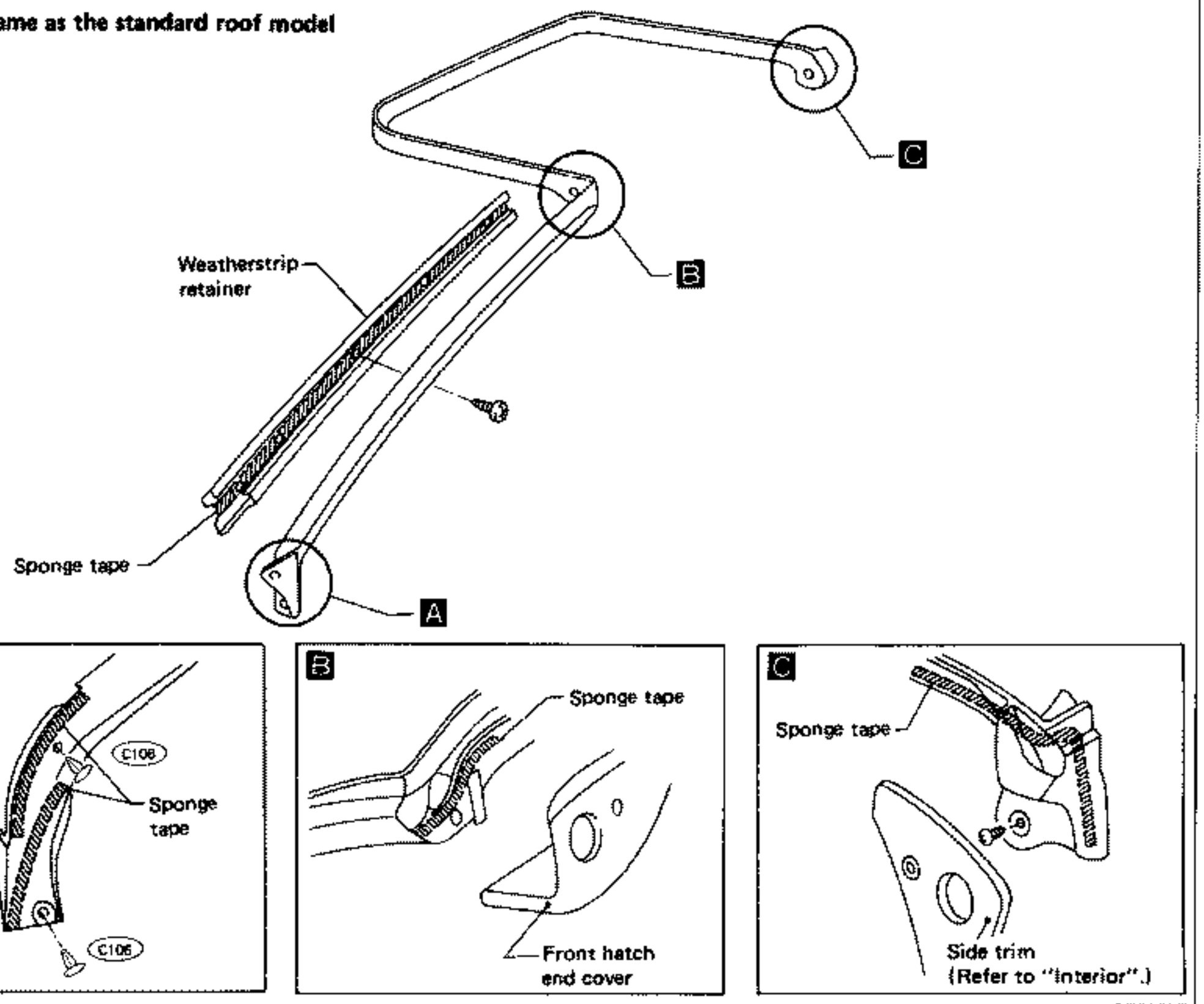

SBF868E

⑦ Door weatherstrip

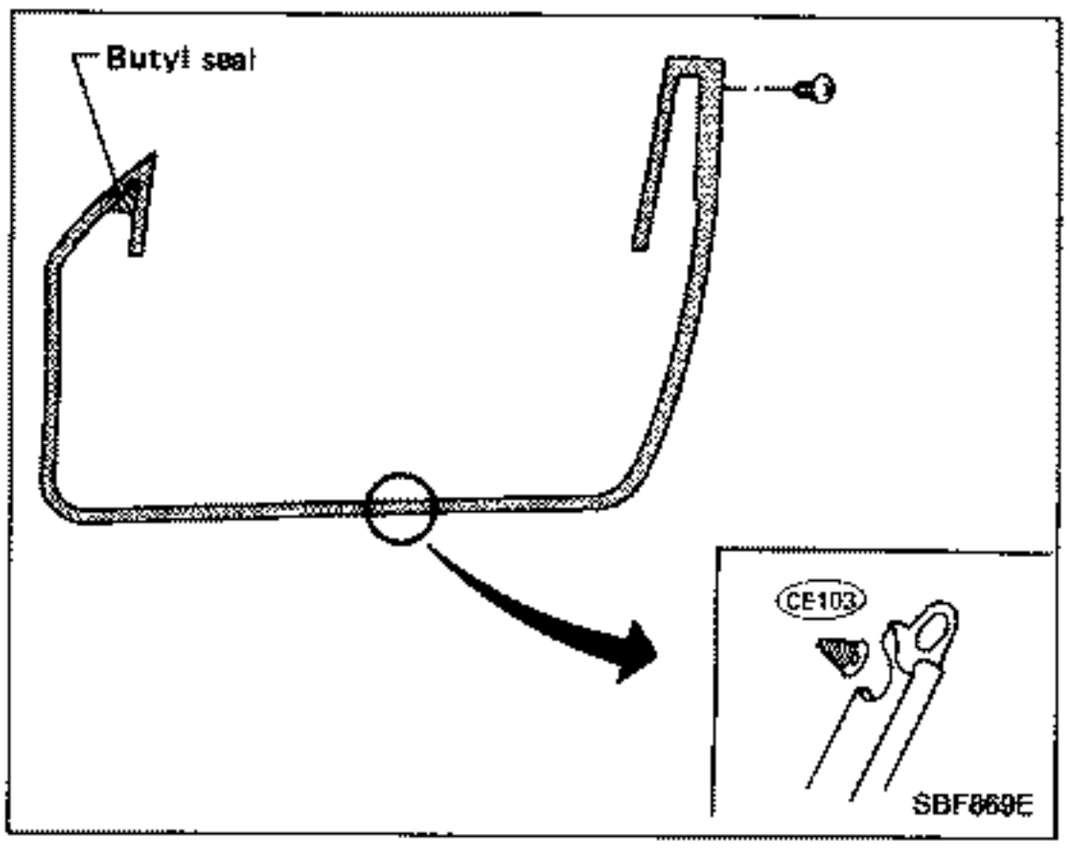

SBF869E

Exterior (Cont'd)

⑧ Door outside molding

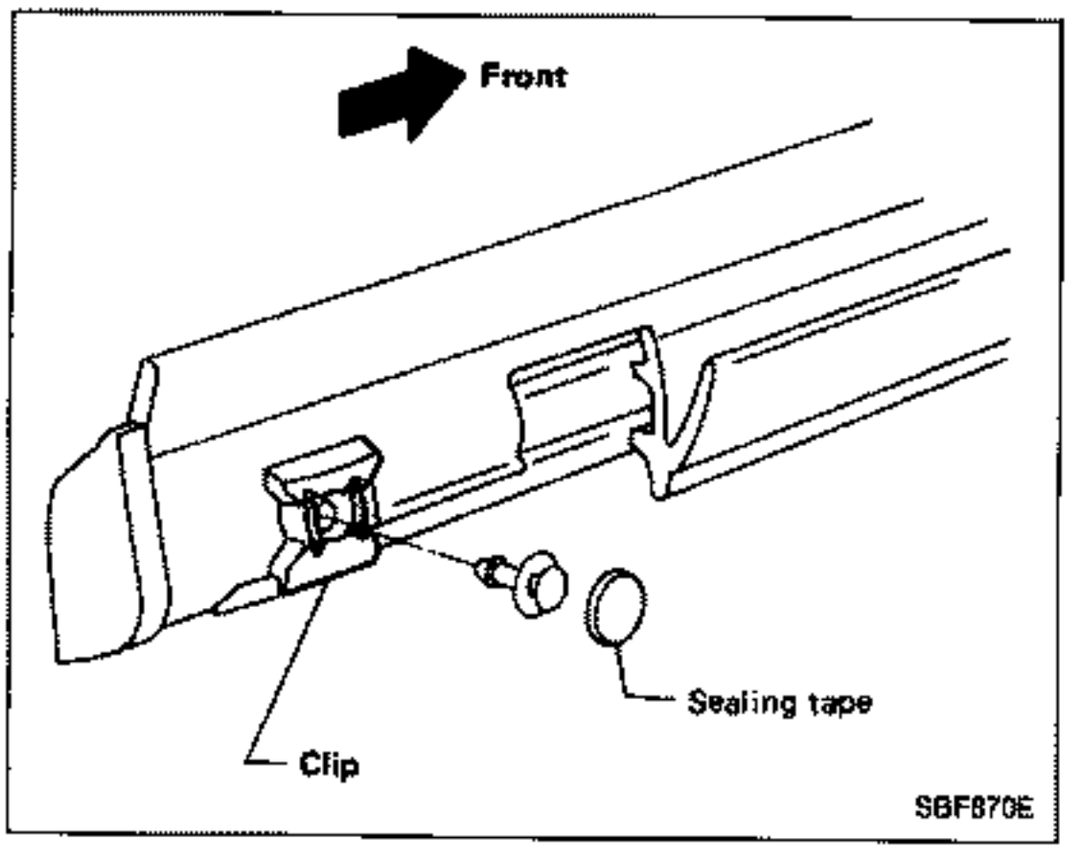

⑨ Door outer finisher

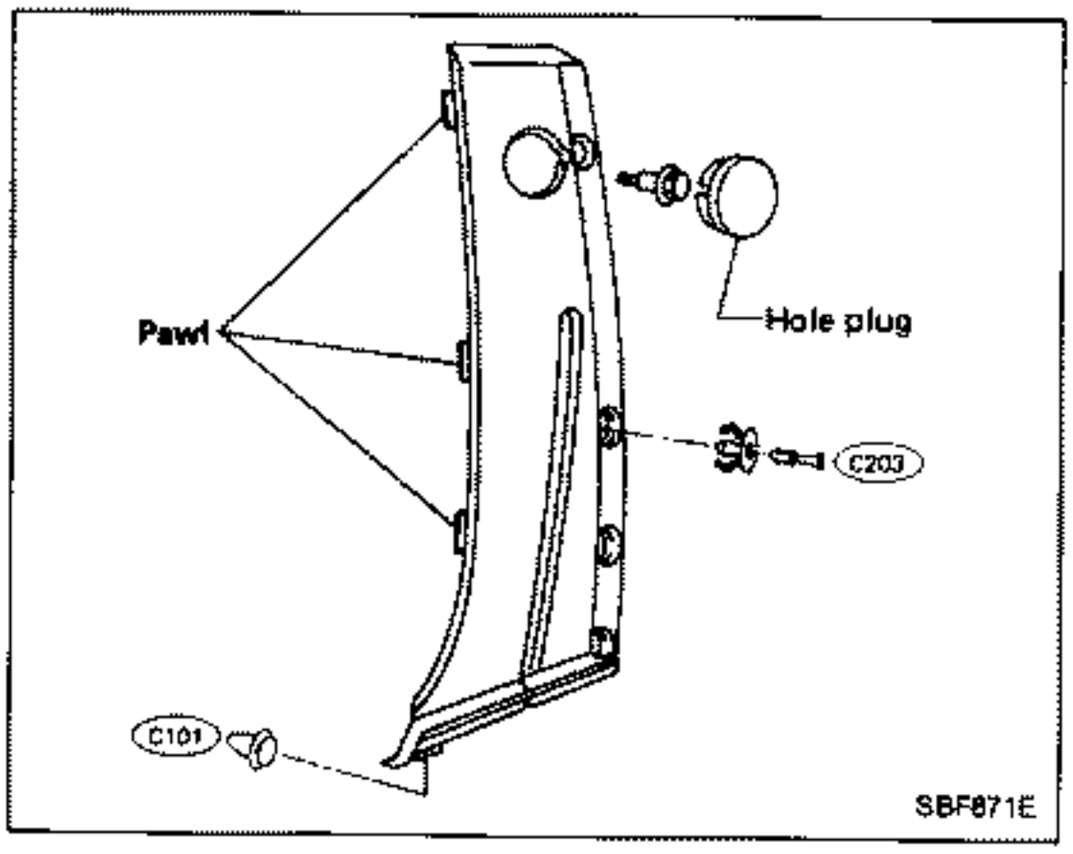

⑩ T-bar roof sash and T-bar roof weatherstrip

These are part of the T-bar roof glass and cannot be removed. (Refer to T-BAR ROOF.)
If they are damaged, replace entire T-bar roof glass assembly.

⑪ T-bar roof side weatherstrip

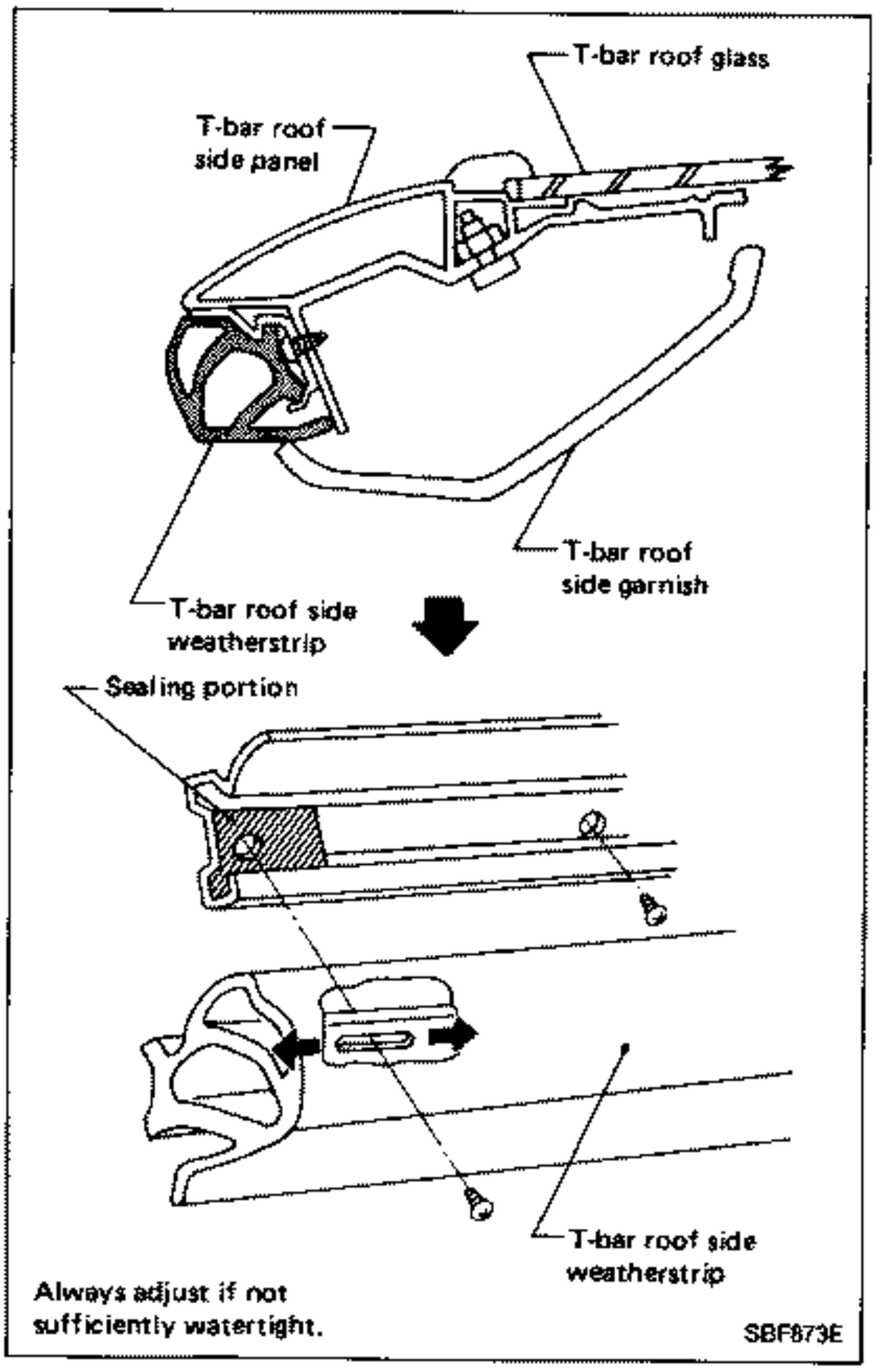

⑫ Back door glass upper molding

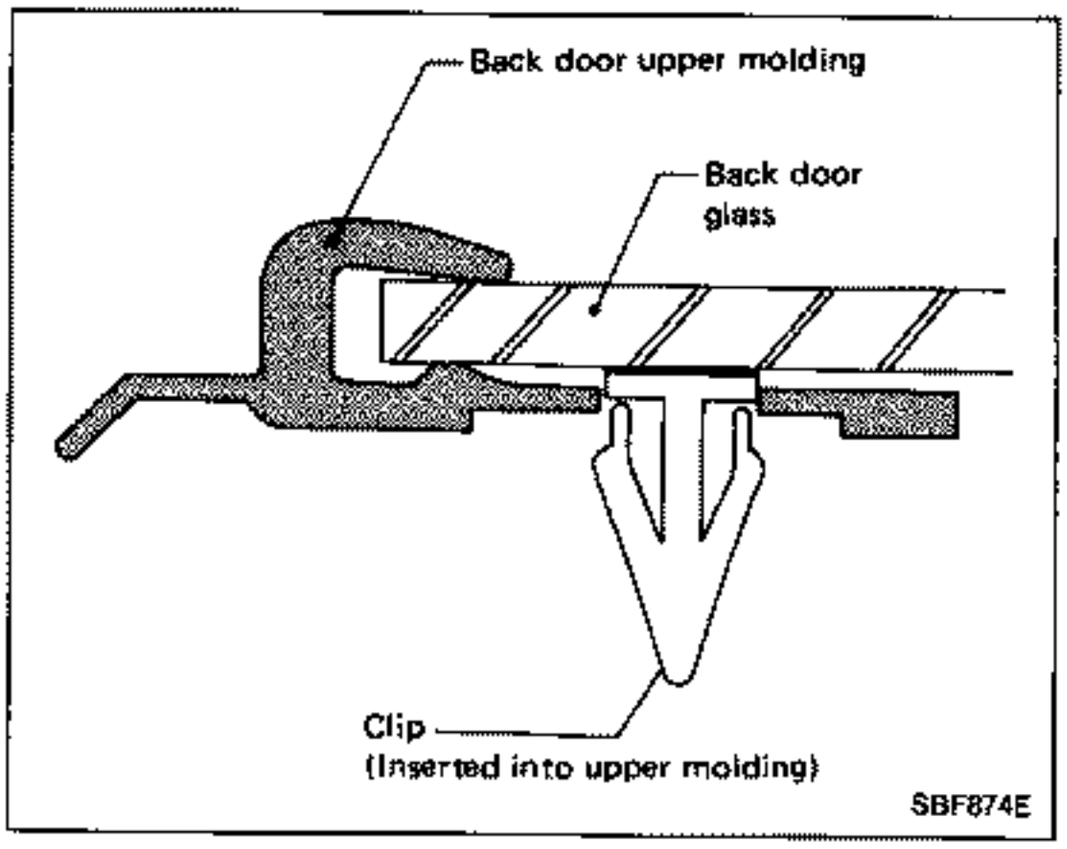

Exterior (Cont'd)

⑬ Back door glass side molding

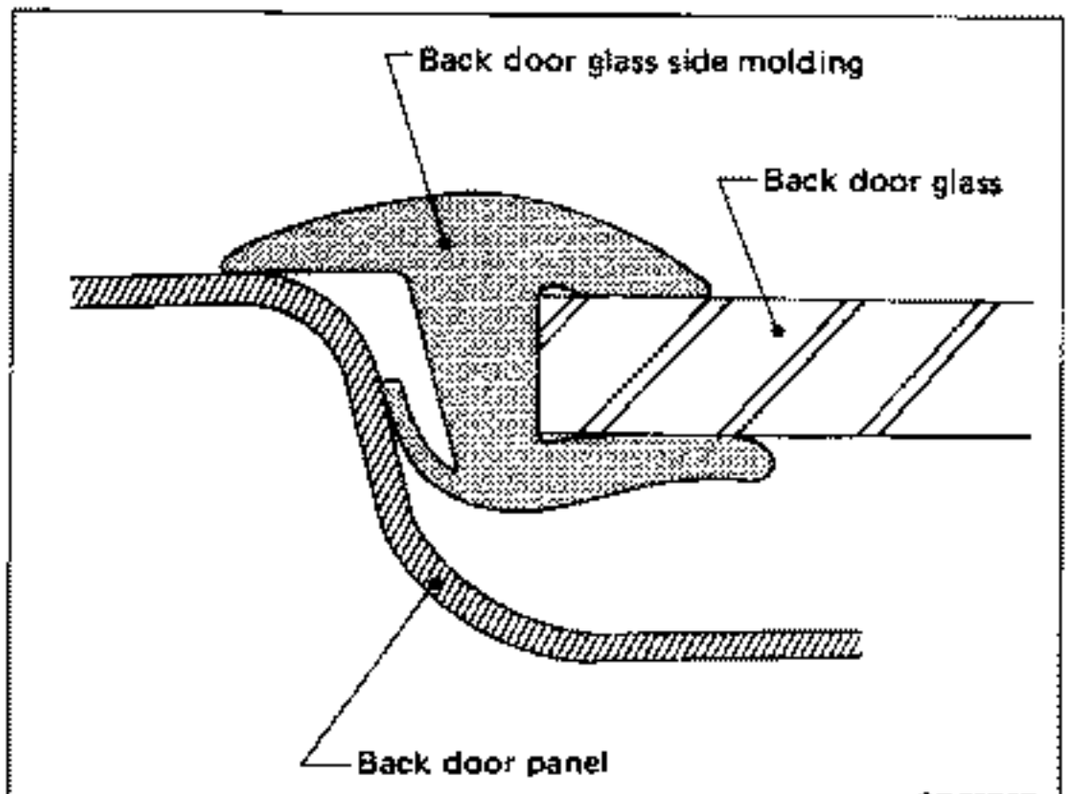

⑭ Back door weatherstrip

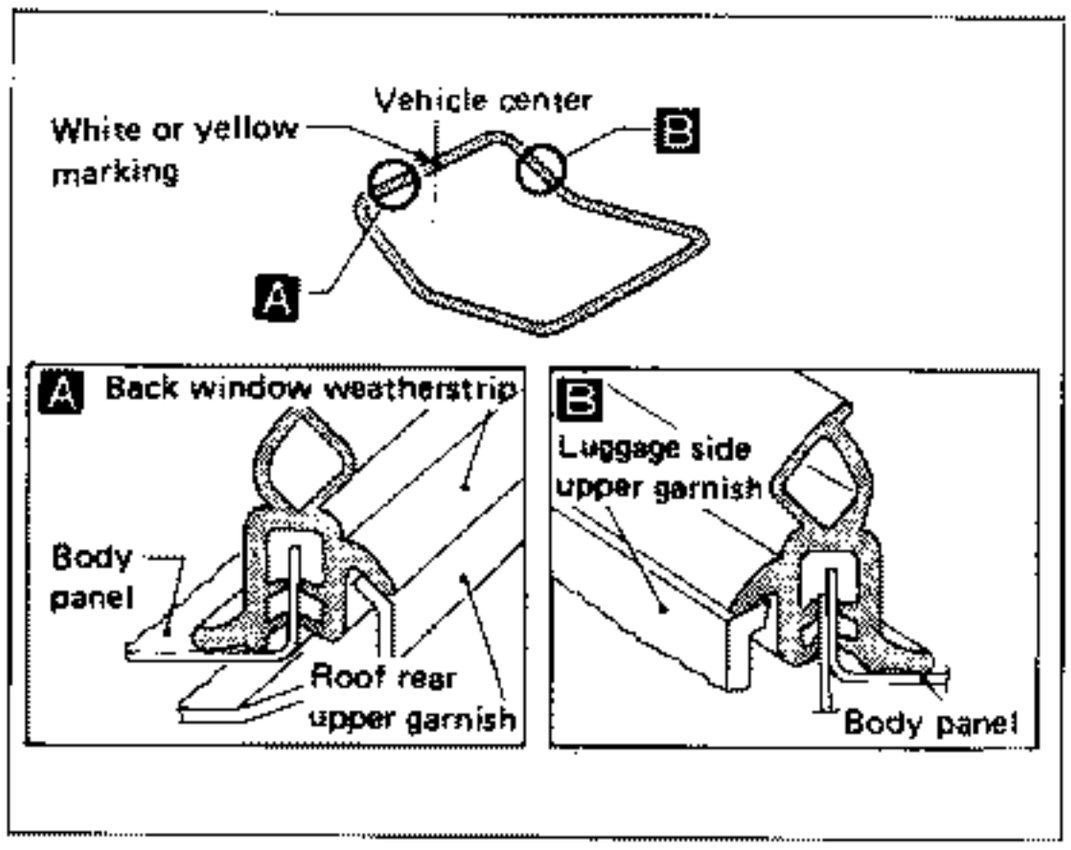

⑮ Back door molding

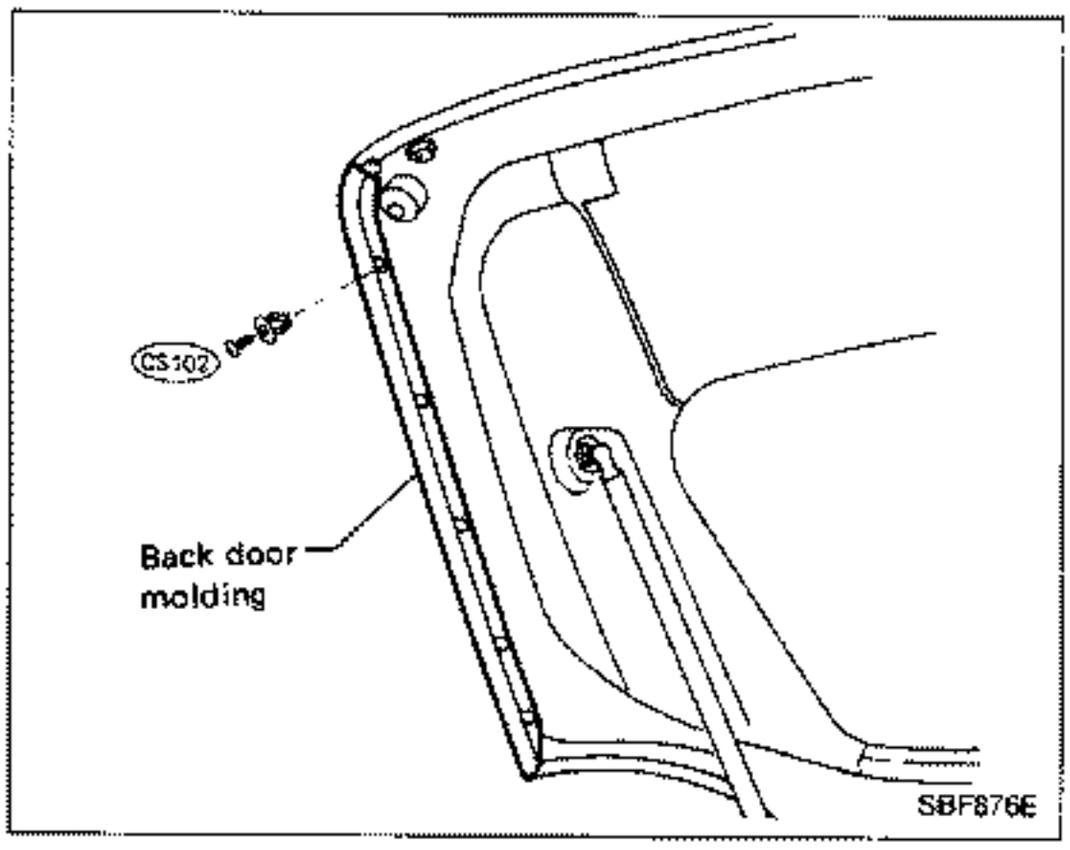

⑯ Front panel finisher

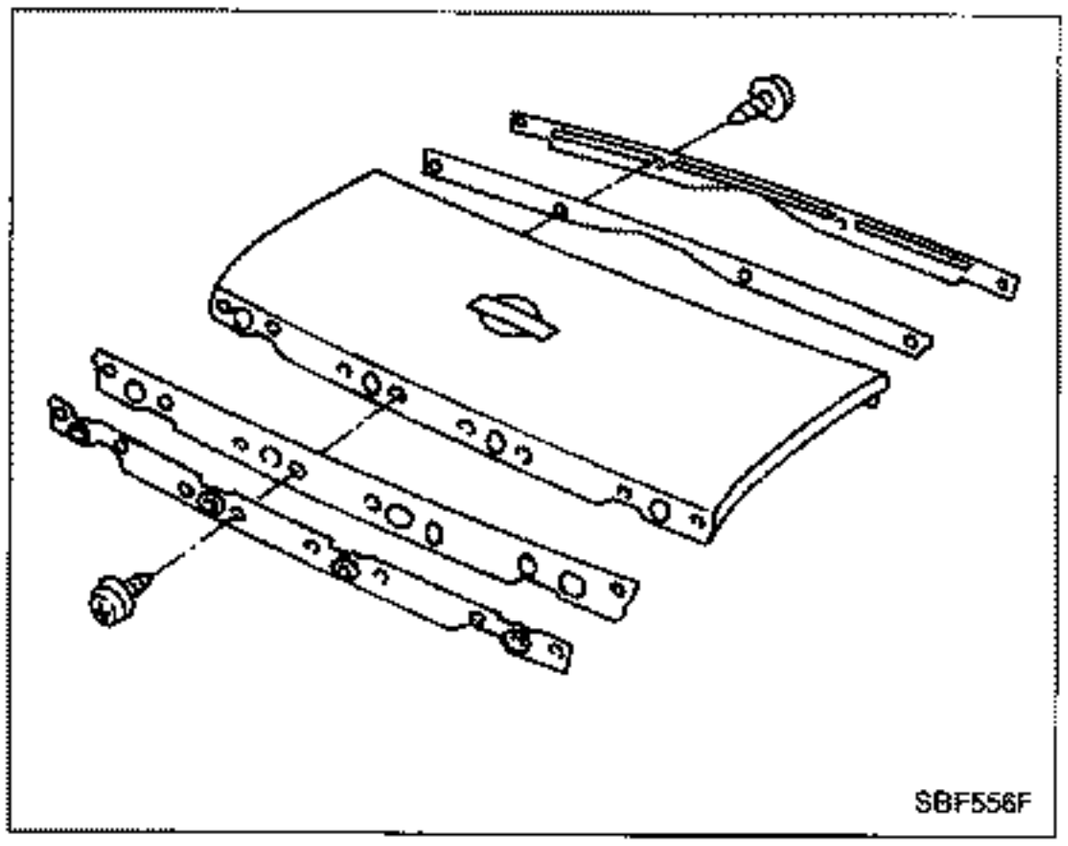

⑰ Rear panel finisher

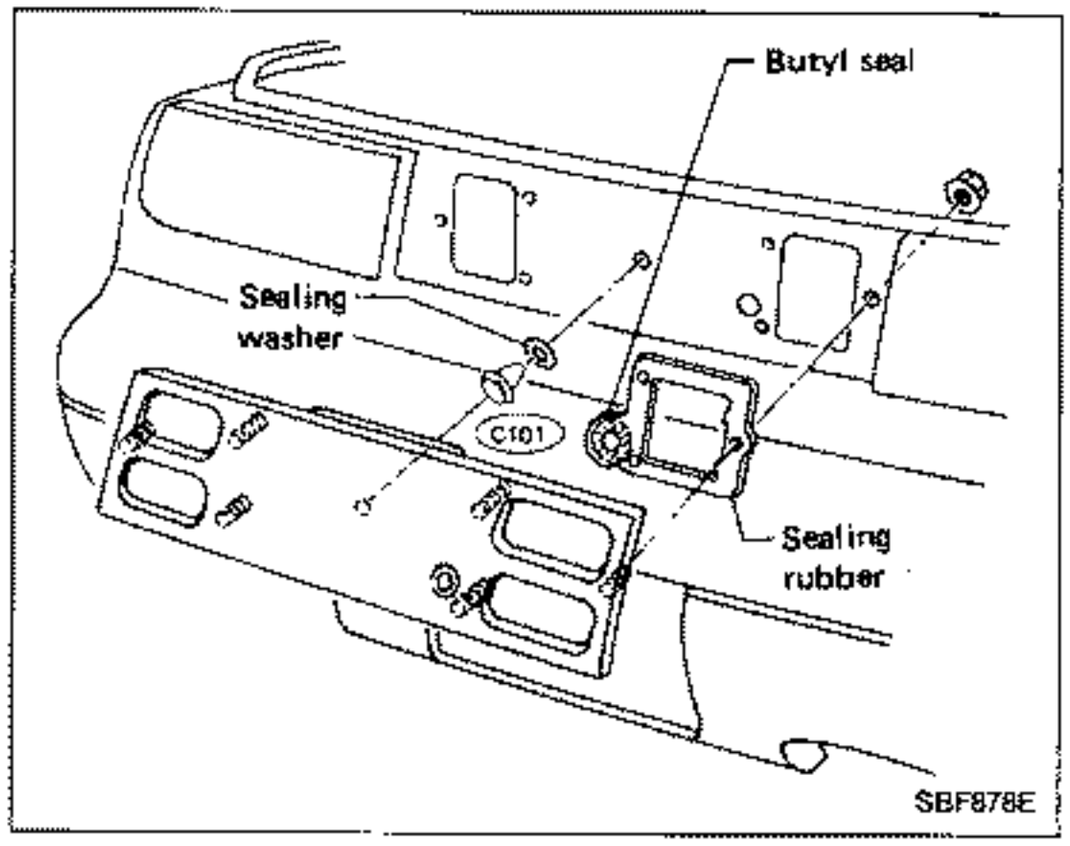

Exterior (Cont'd)

⑱ Rear combination lamp

Removal

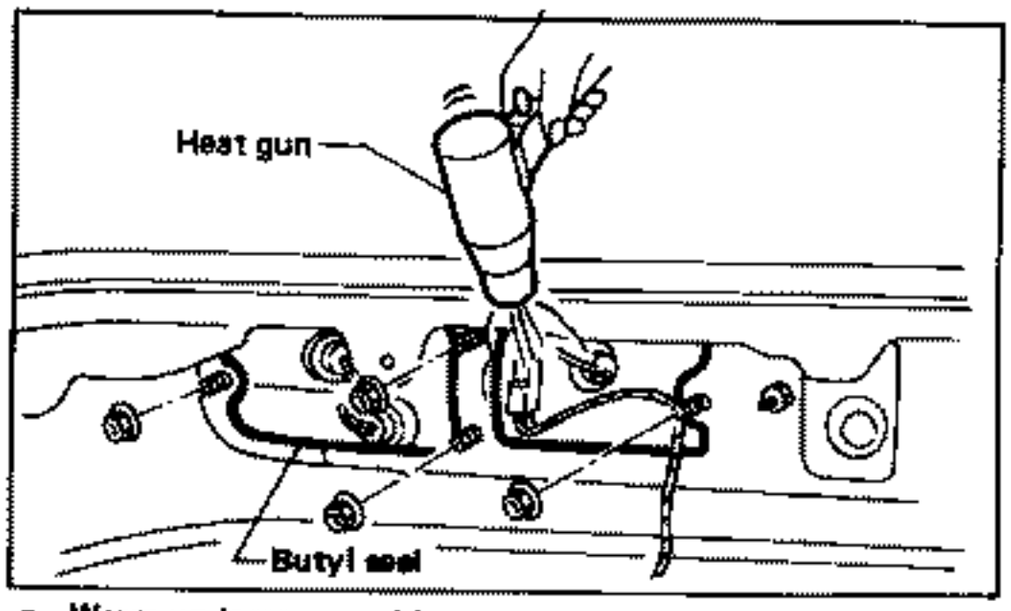

- Warm up lamp assembly area to a temperature a little below 60°C (140°F).

Installation

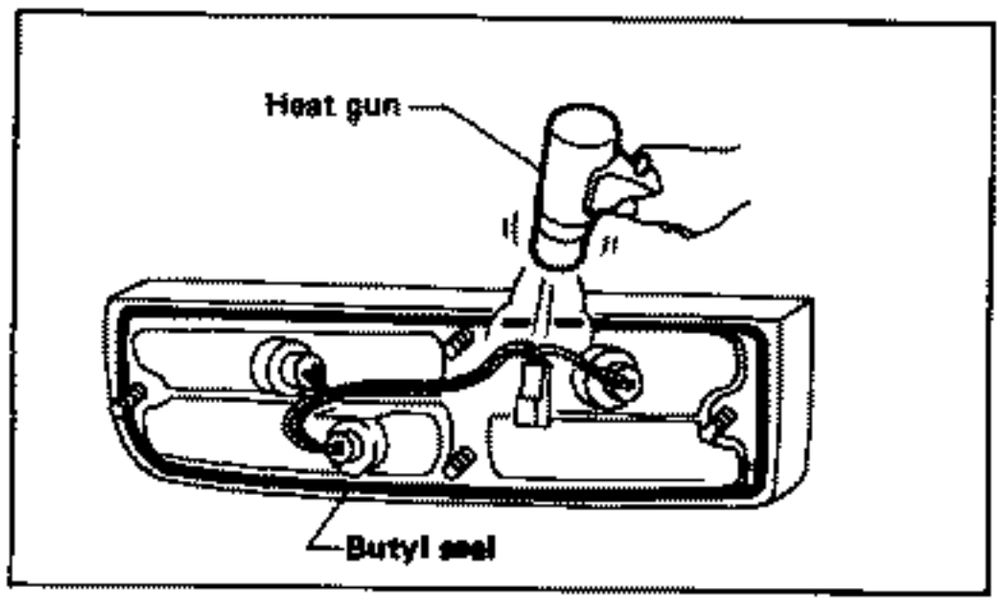

- Apply butyl seal evenly as it tends to become thin in the corners.
- Warm up lamp assembly area to a temperature a little below 60°C (140°F).

SBF866F

T-BAR ROOF

- Handle T-bar roof glass with care so not to damage it.
- Apply sealant to portions susceptible to water leakage if necessary.
- Side molding, sash, lock basement and glass of T-bar roof constitute one unit and cannot be disassembled.

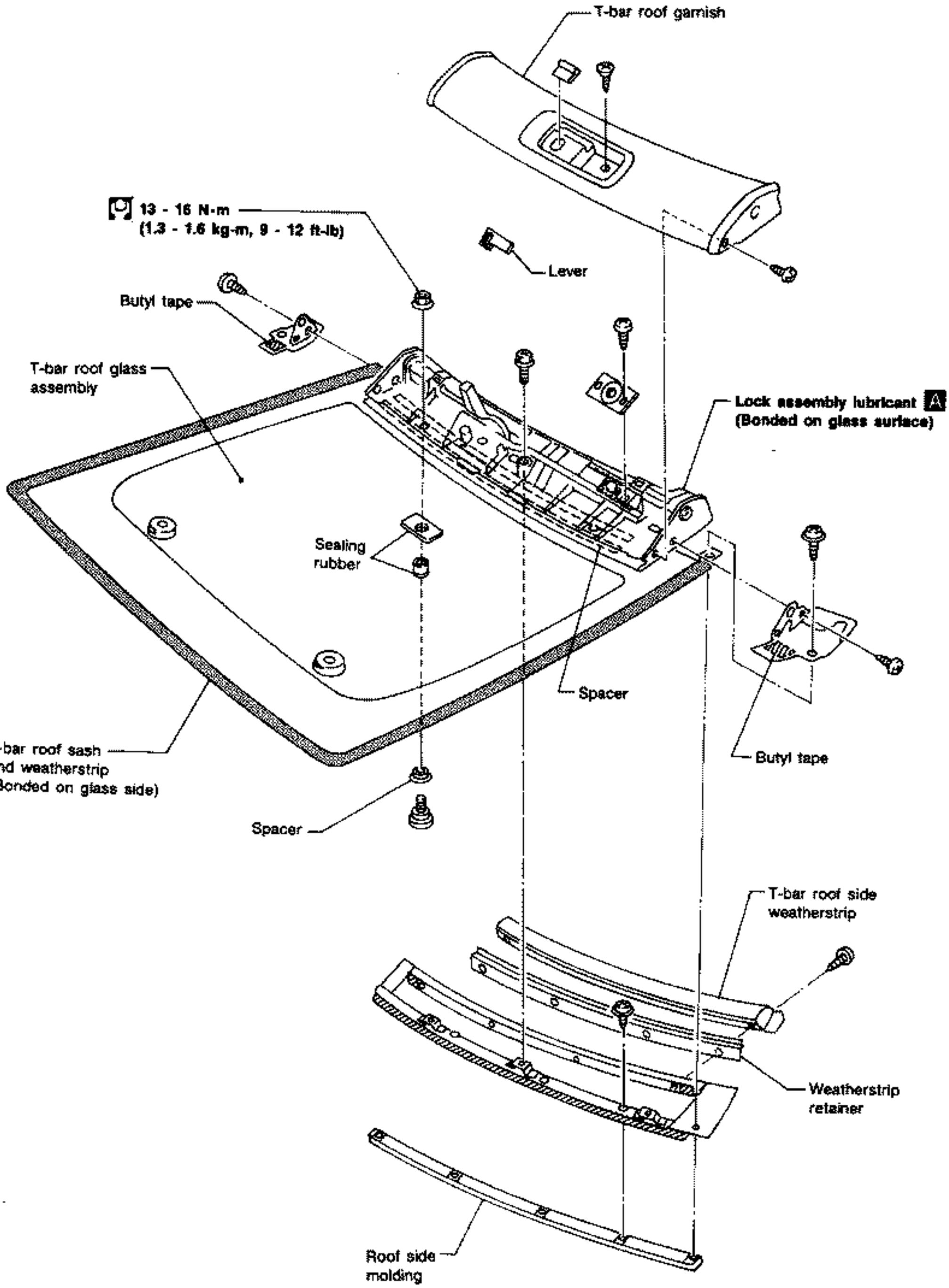

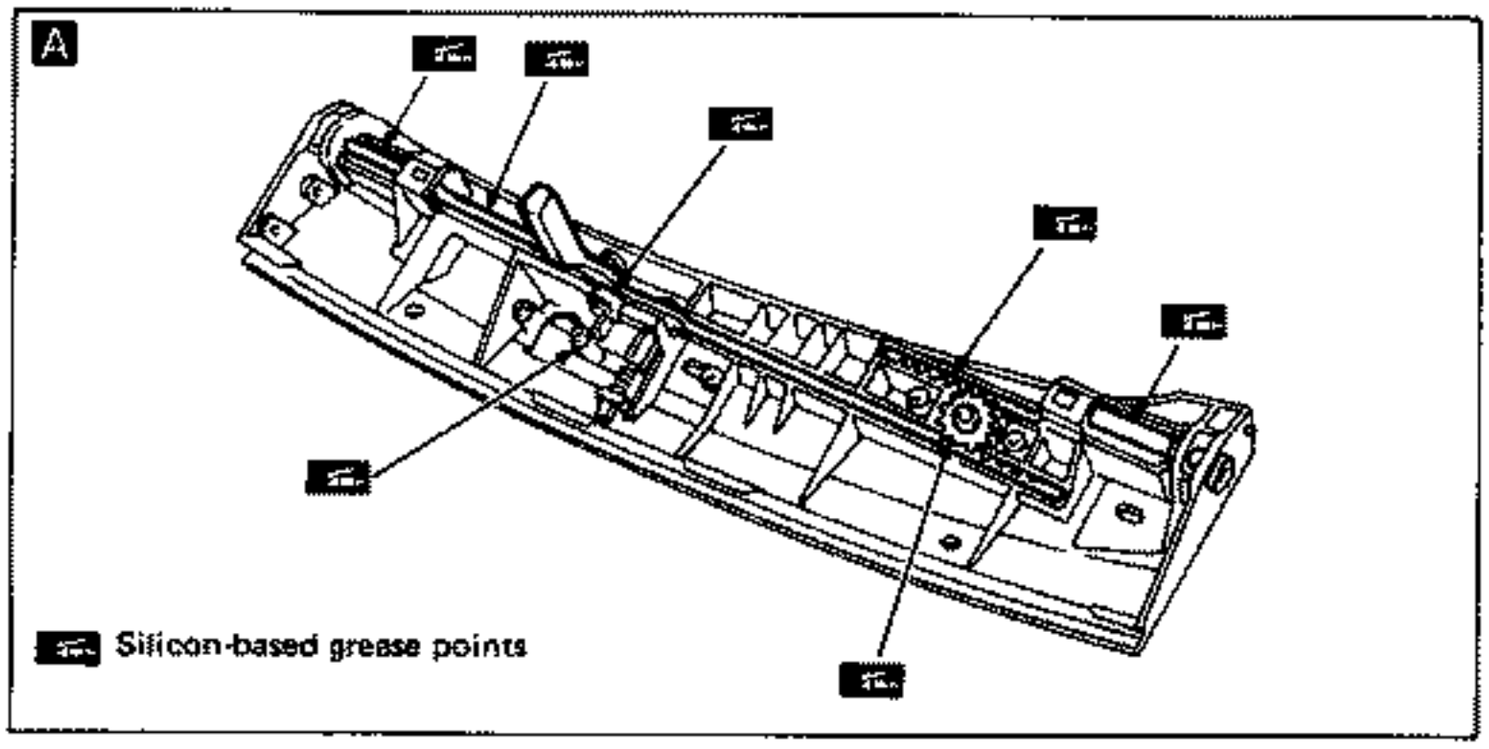

T-bar roof hook

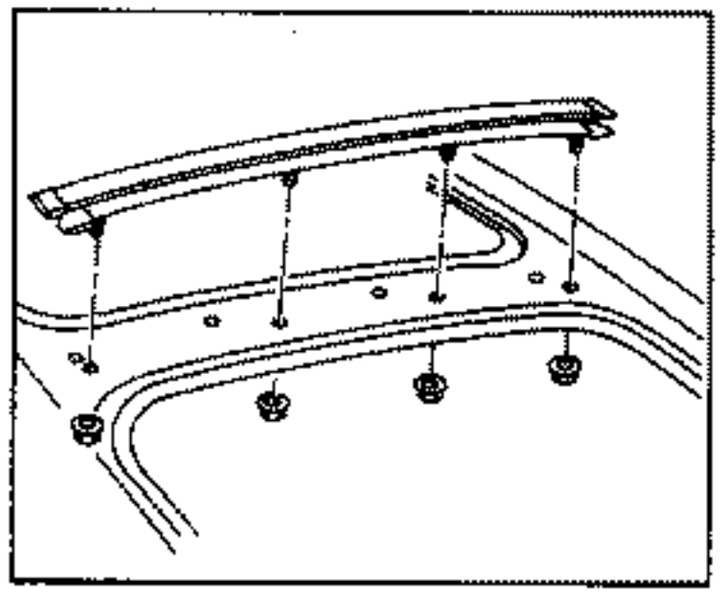

T-bar roof female lock adjustment

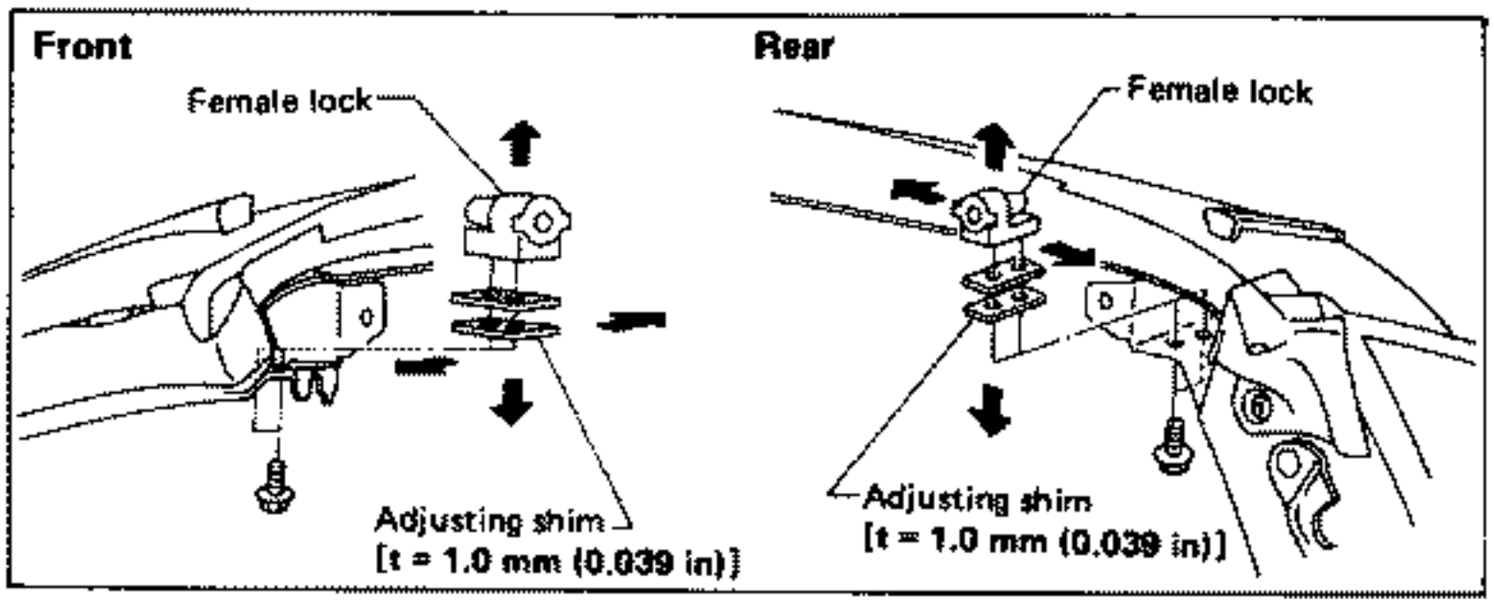

MBF031A

- When installing, make sure that there are not gaps or waves at ends of air spoiler.
- Before installing spoiler, clean and remove oil from surface where spoiler will be mounted.

REAR AIR SPOILER

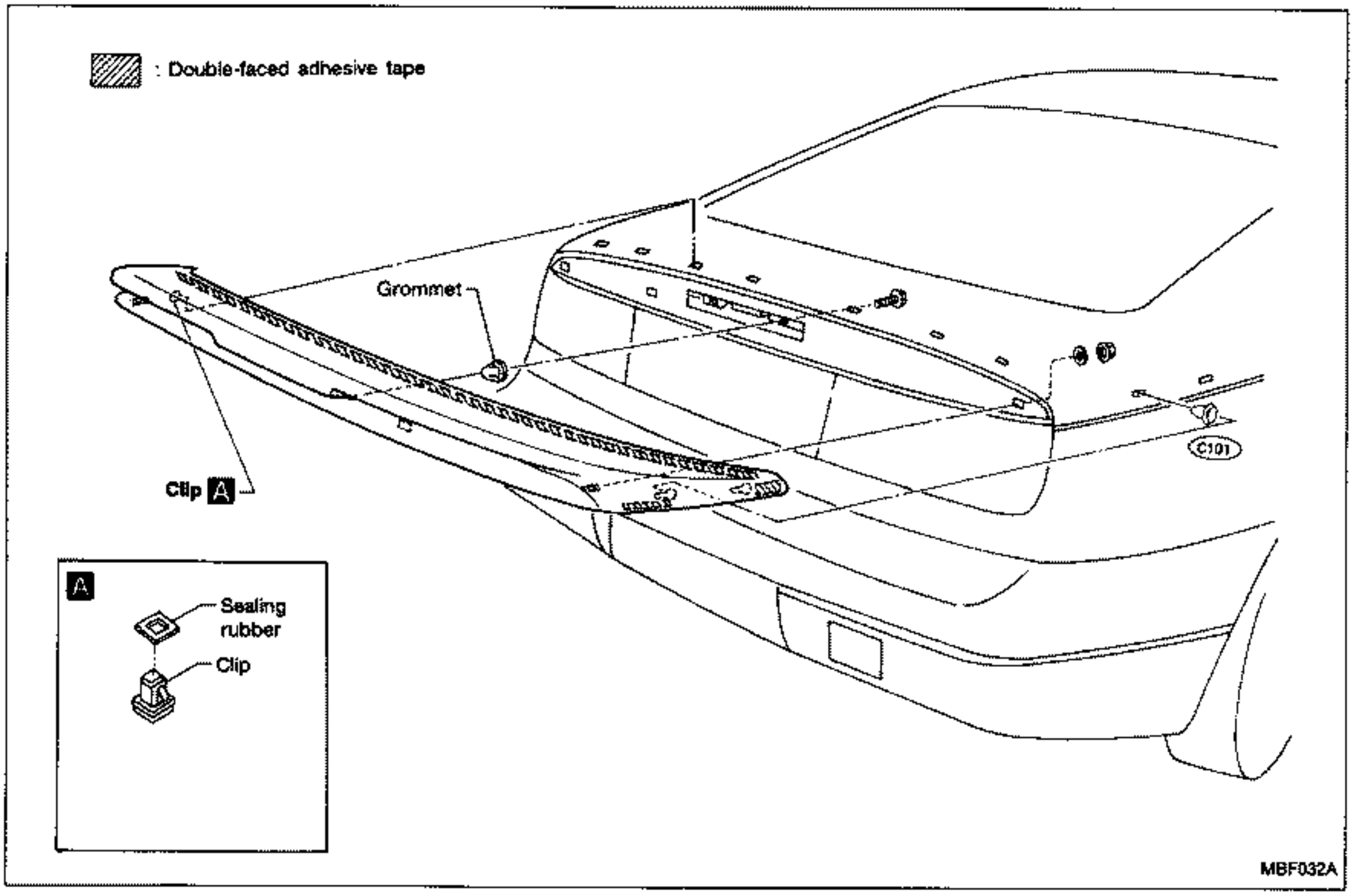

NOTE

- When removing or installing the seat trim, handle it carefully to keep it from becoming dirty and to avoid damage.

FRONT SEAT

For power seat

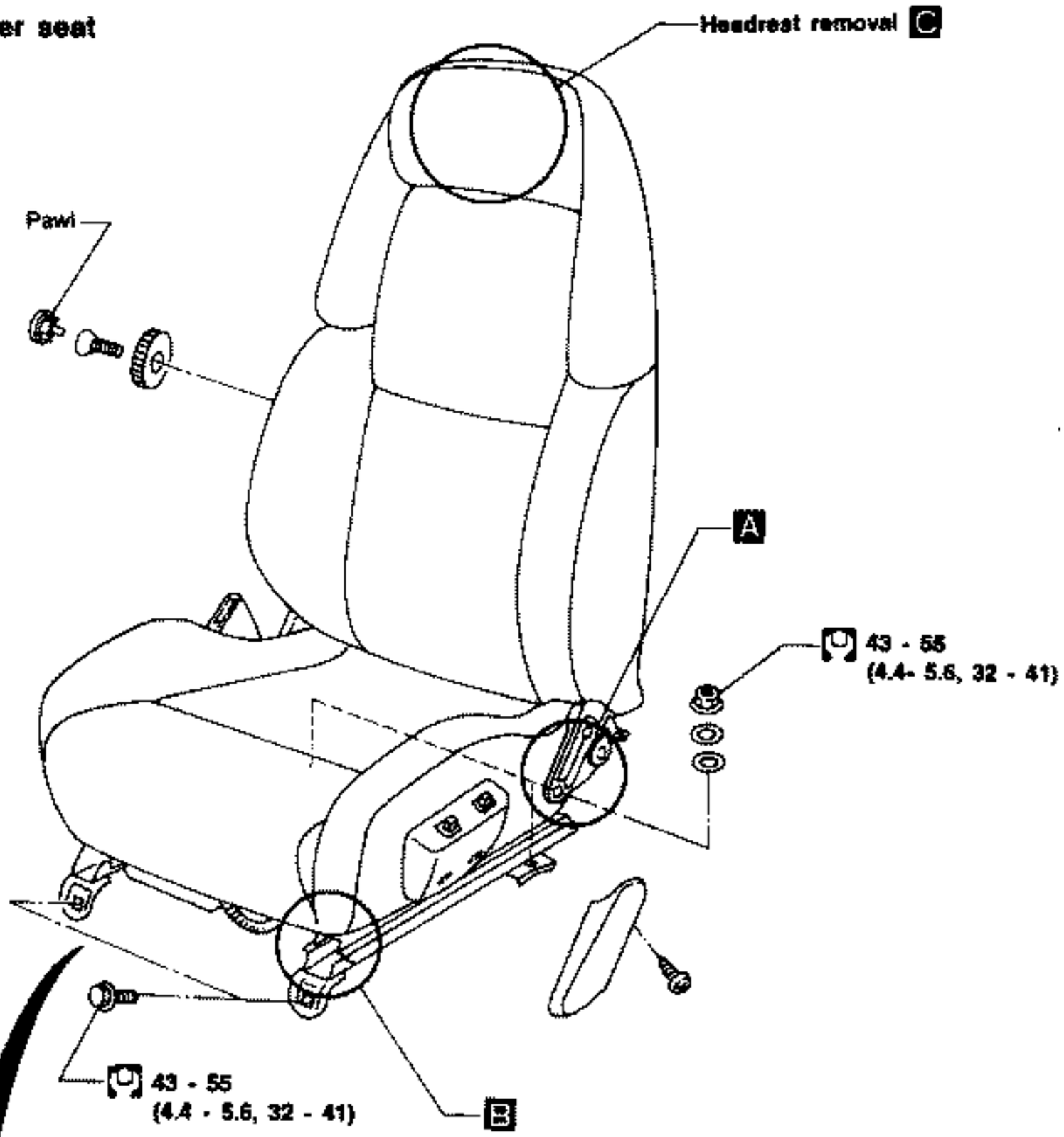

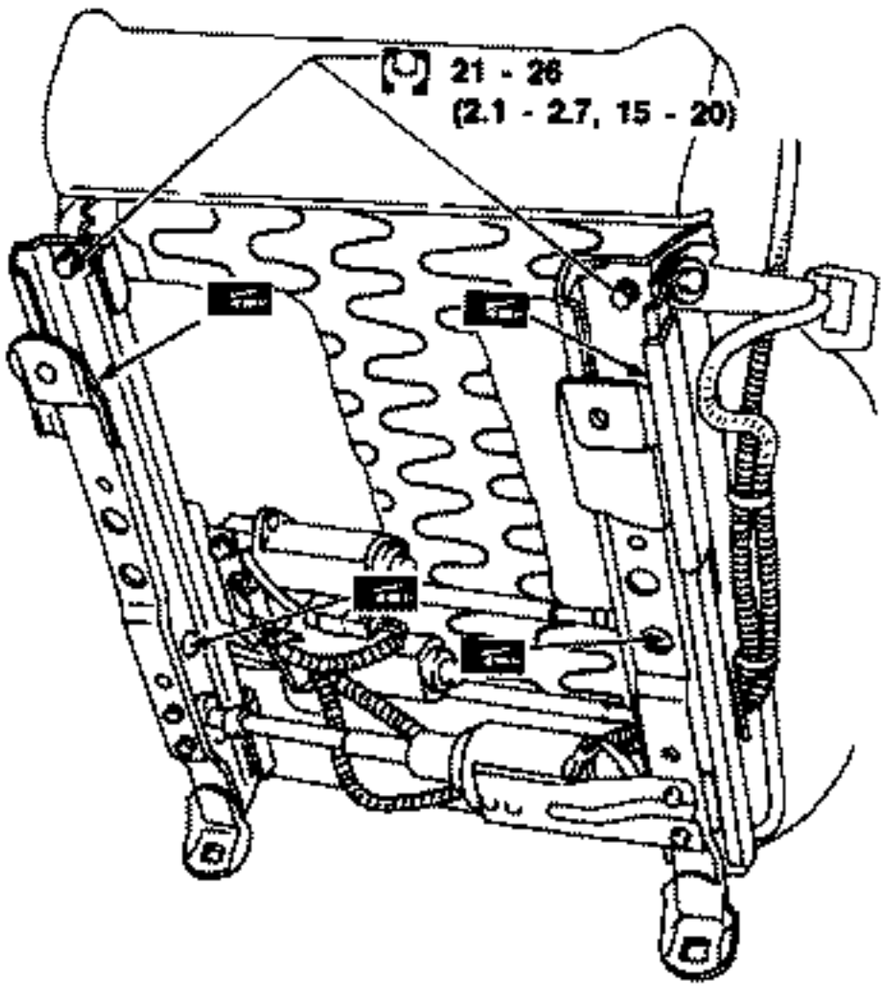

For manual seat

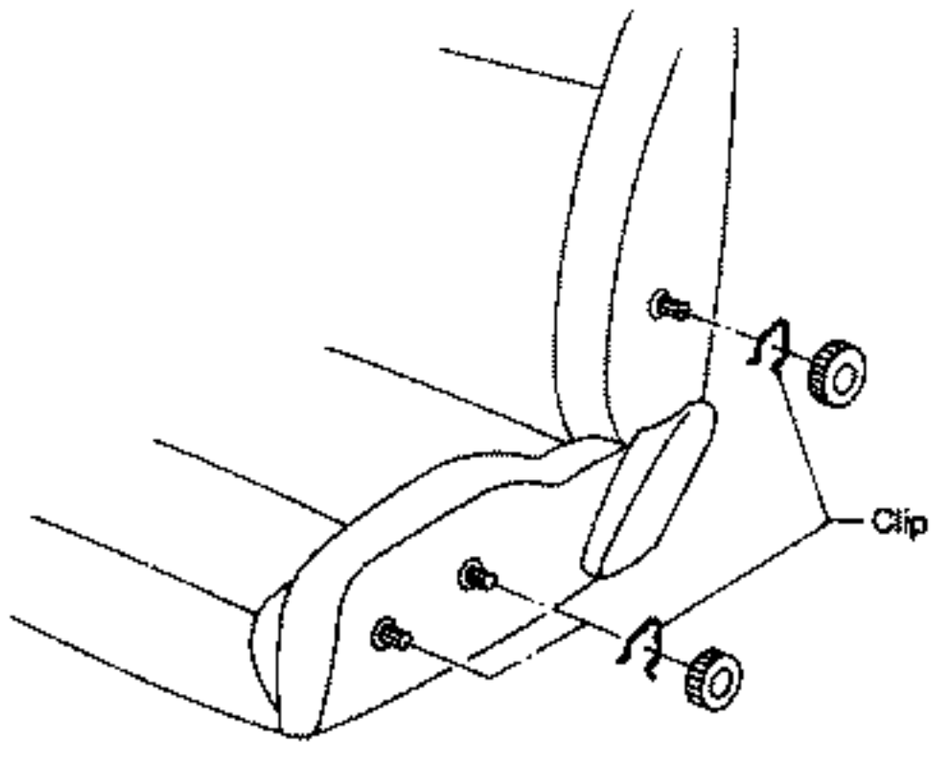

: N·m (kg-m, ft-lb)

A

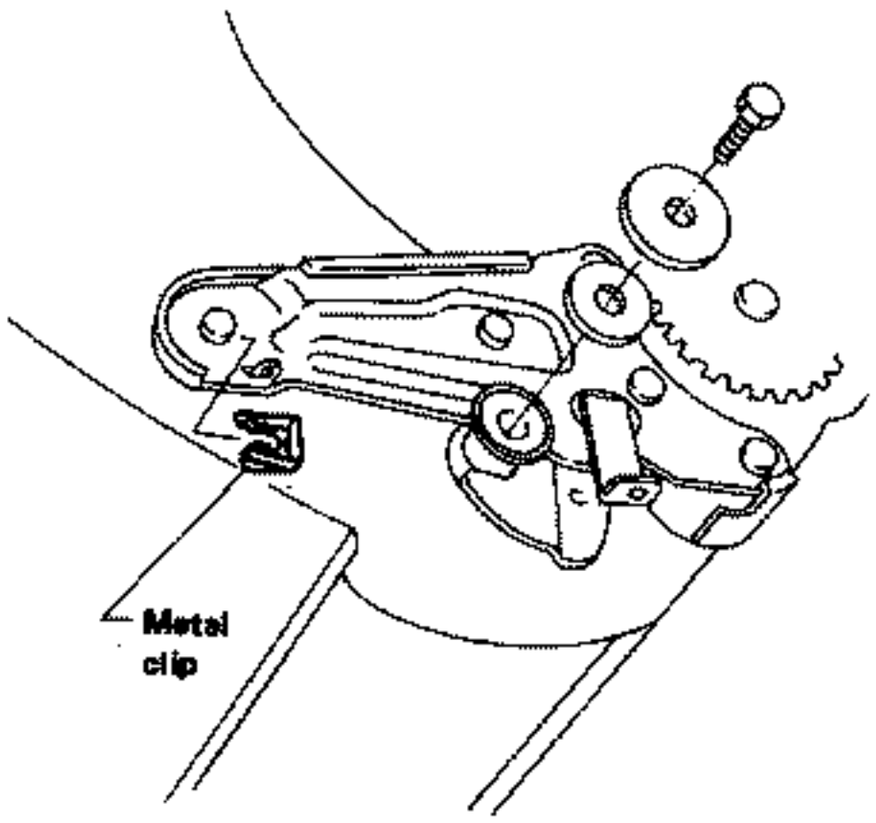

B For power seat

Remove nuts from left and right guide rails. Seat will then be free to slide.

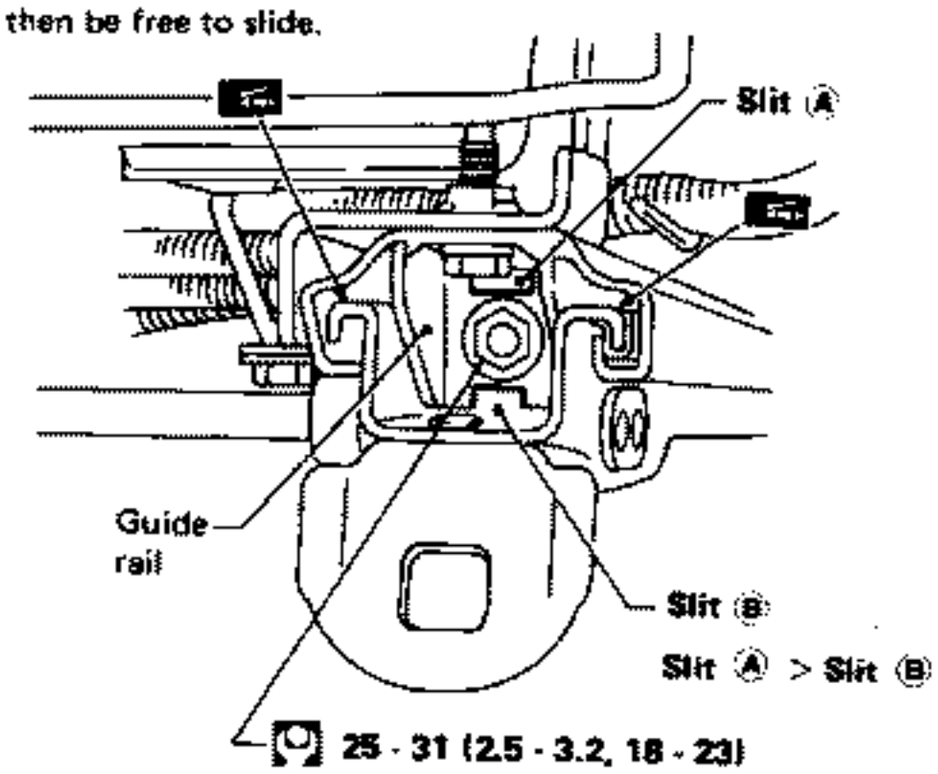

C Push (trim-covered) lock knob to remove headrest.

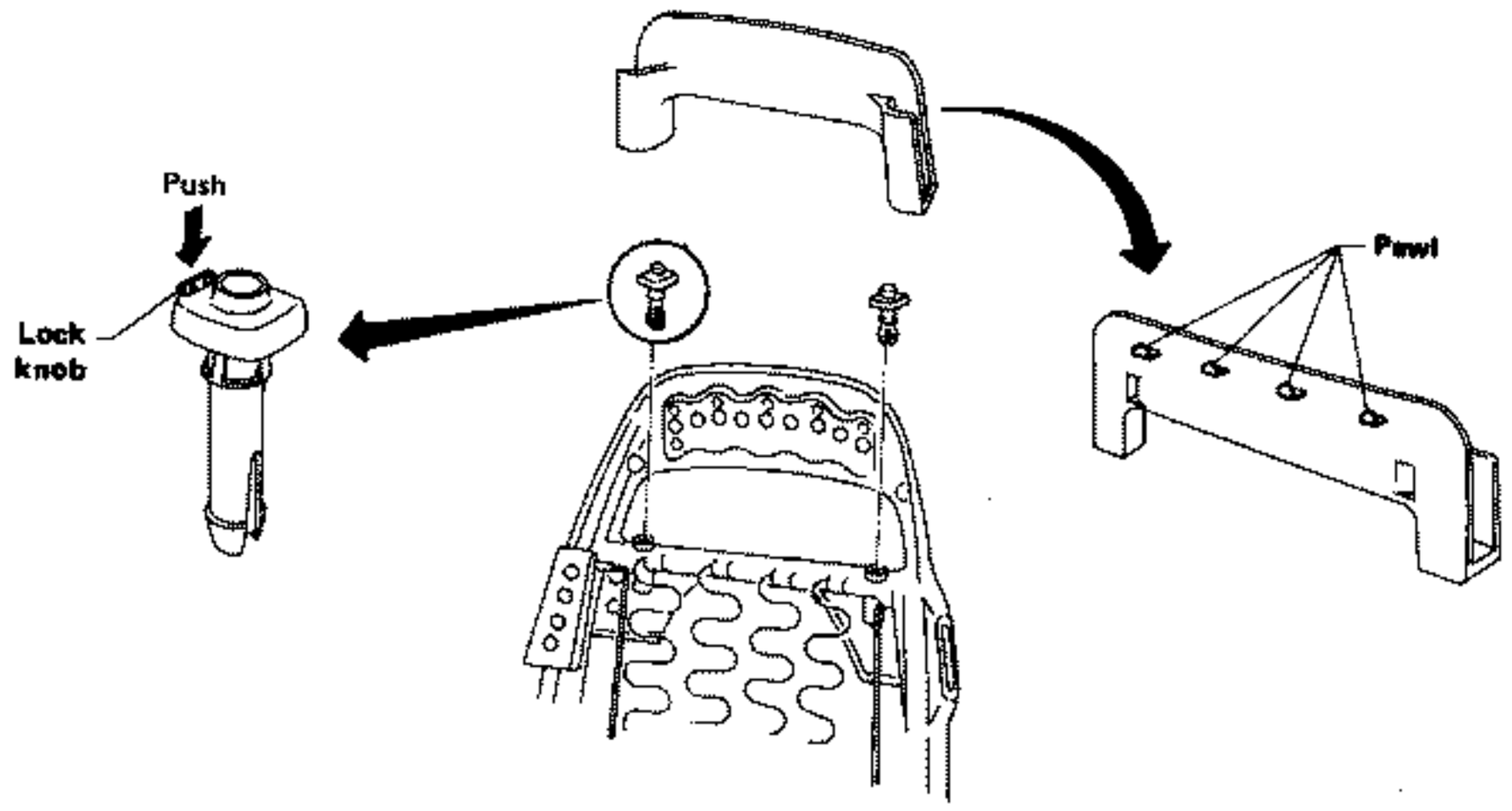

MBF057A

REAR SEAT

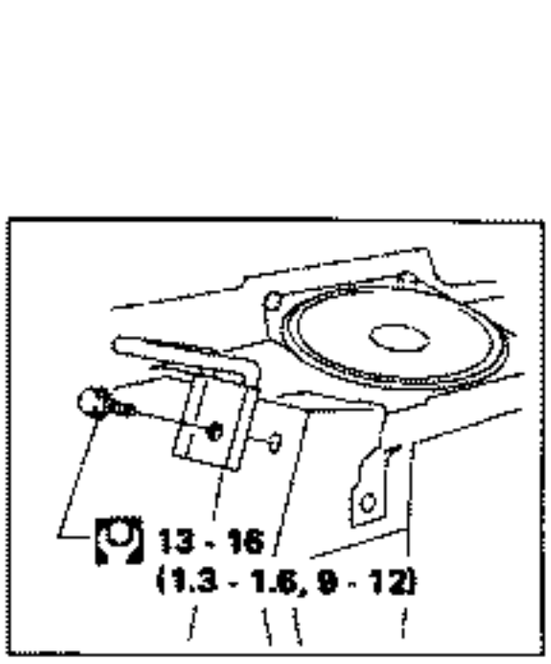

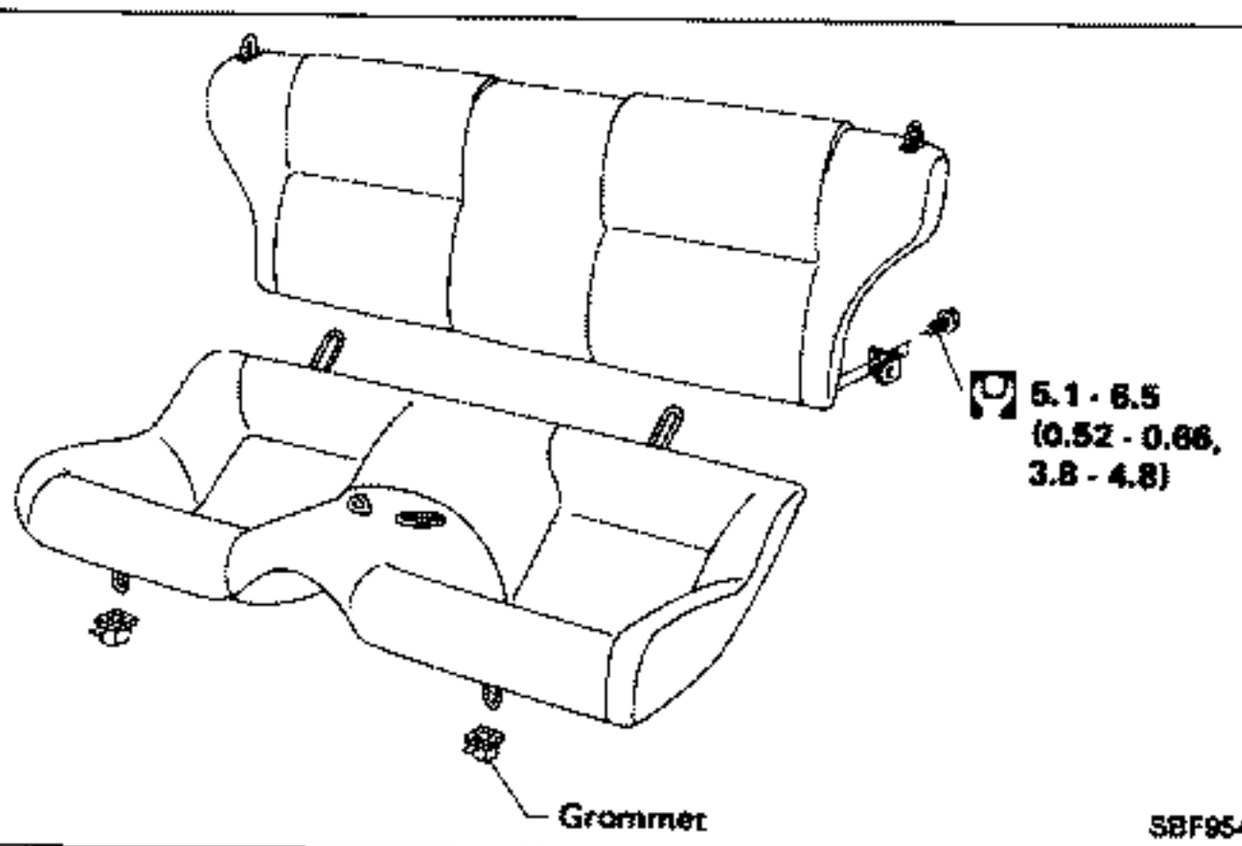

: N·m (kg-m, ft-lb)

SBF954E

POWER SEAT/WIRING DIAGRAM

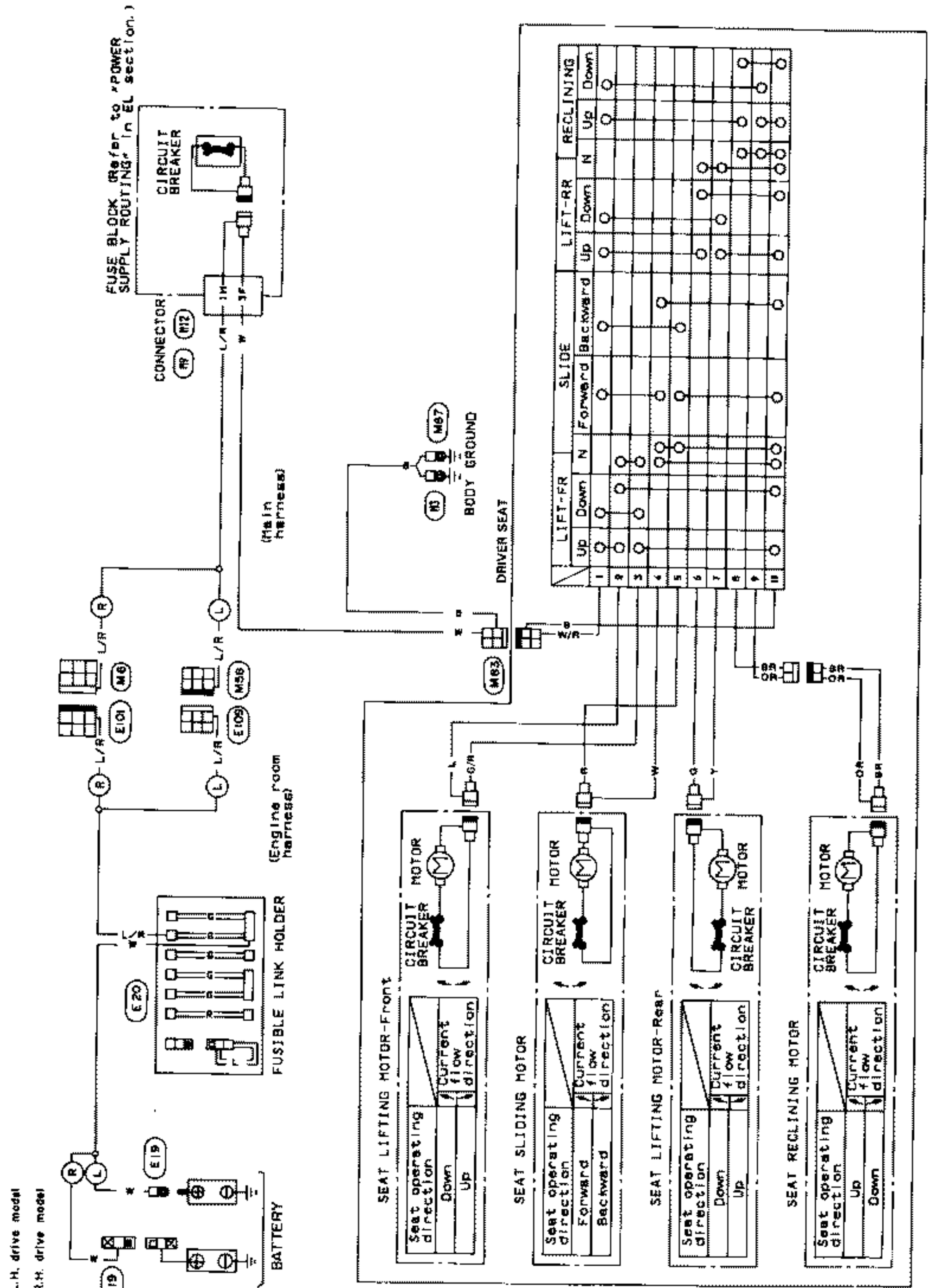

SBF633F

Windshield

REMOVAL

After removing moldings, remove glass.

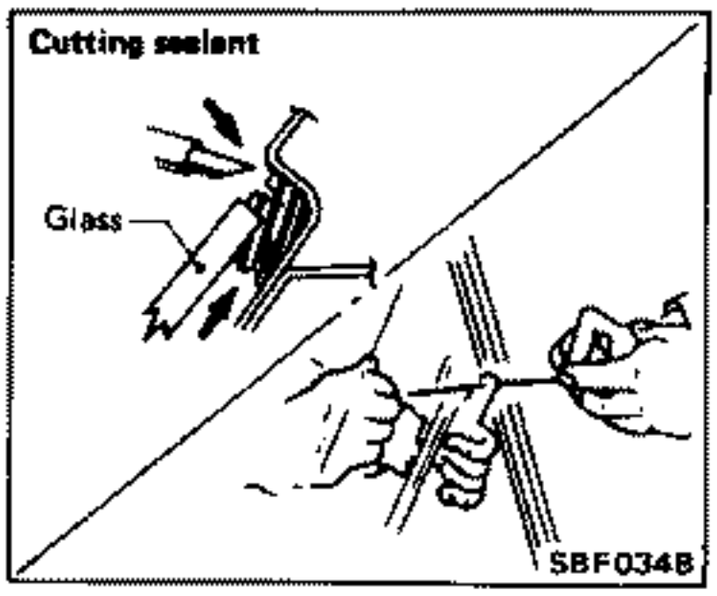

CAUTION:
Be careful not to scratch glass when removing.

INSTALLATION

- Use genuine Nissan Sealant kit or equivalent. Follow instructions provided with each kit.
- **After installation, the vehicle should remain stationary for about 24 hours.**
- **Do not use sealant which is more than 12 months past its production date.**
- **Do not leave cartridge unattended with its cap open.**
- Keep primers and sealant in a cool, dry place. Nissan recommends that they are stored in a refrigerator.
- **Be sure to install moldings.**

WARNING:
Keep heat or open flames away as primers are flammable.

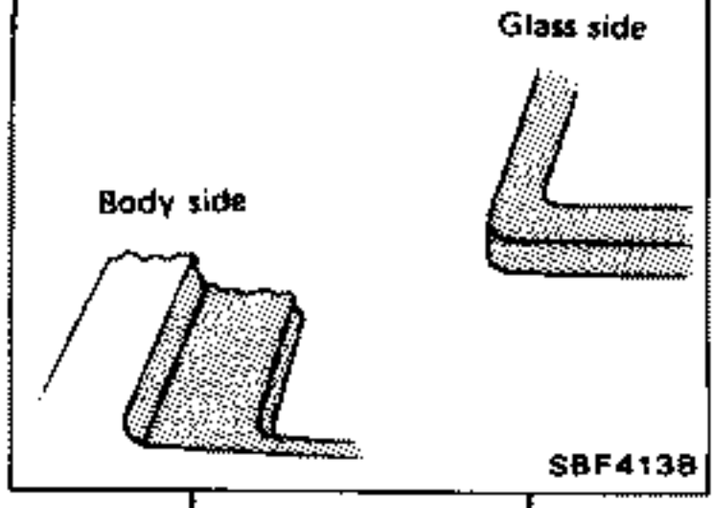

Body side

Install spacers to panel with double-faced adhesive tape.

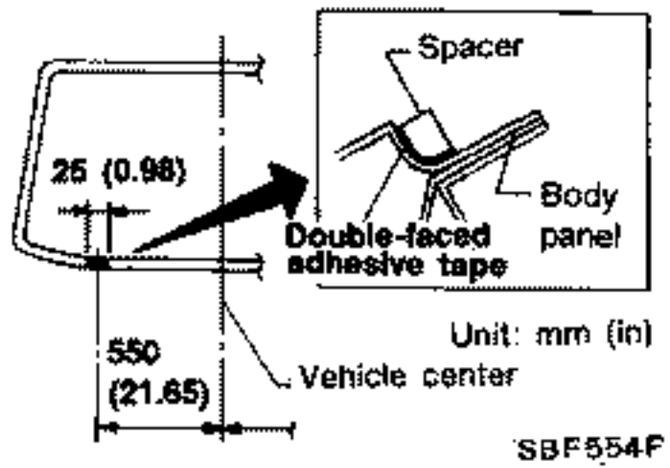

Install molding fastener.

When installing, heat body panel and fastener to approx. 30 to 40°C (86 to 104°F).

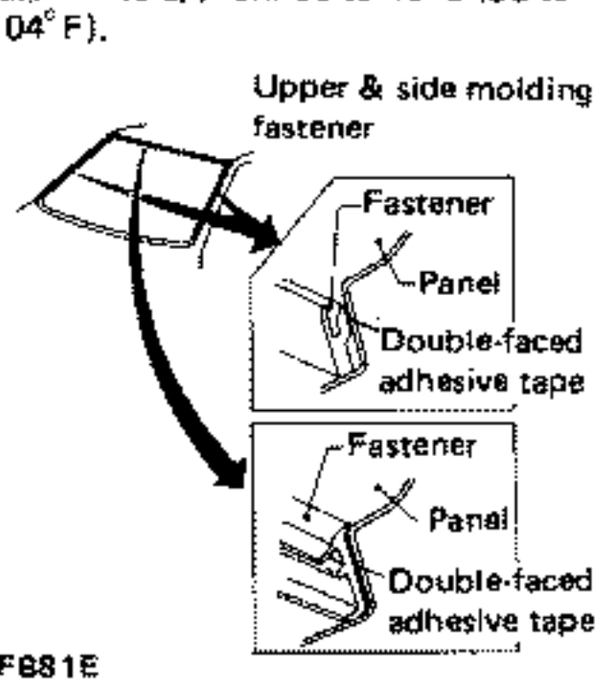

Ⓐ

Glass side

Install dam rubber & spacers with double-faced adhesive tape.

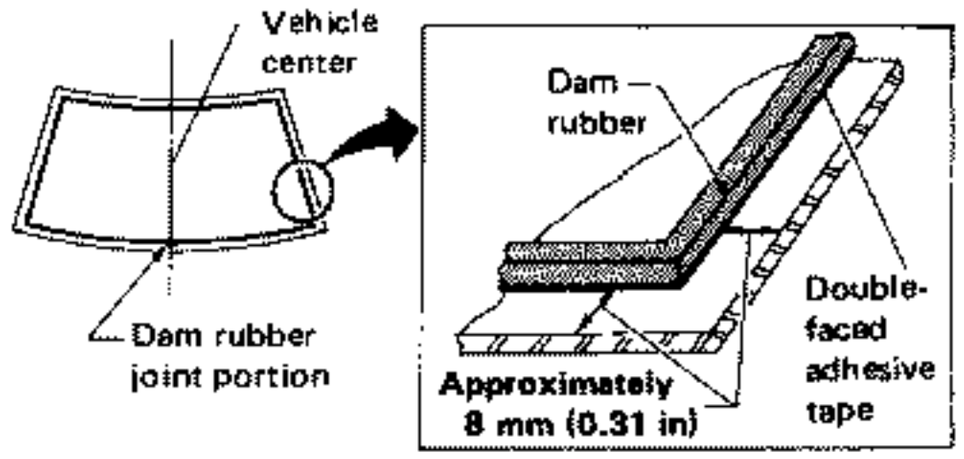

Apply primer A.

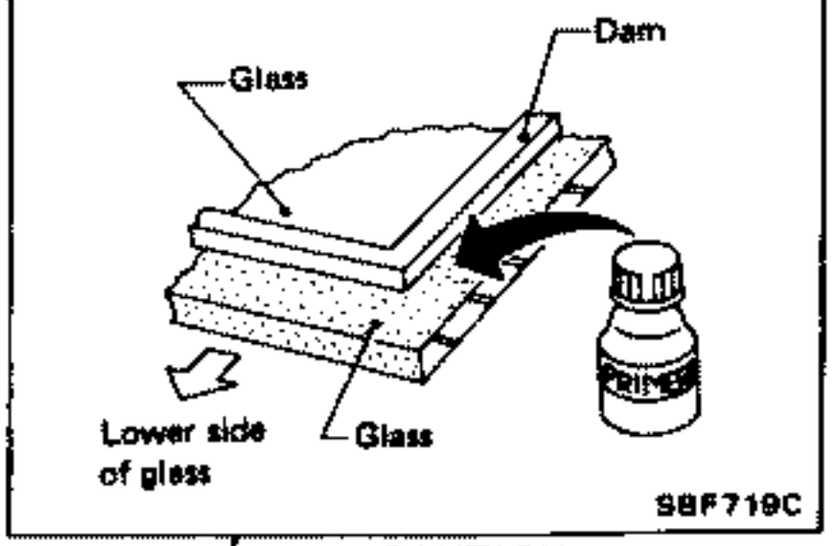

CAUTION:
Allow primers to dry for 10 to 15 minutes before proceeding to the next step.

Ⓑ

Windshield (Cont'd)

Ⓐ

Apply primer E.

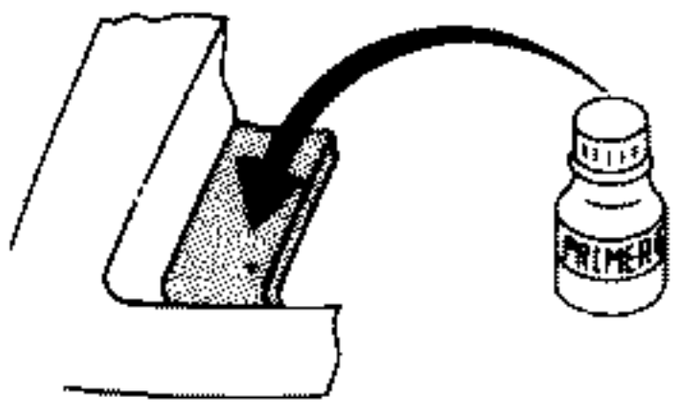

CAUTION:
Allow primers to dry for 10 to 15 minutes before proceeding to the next step.

Ⓑ

Apply sealant evenly.

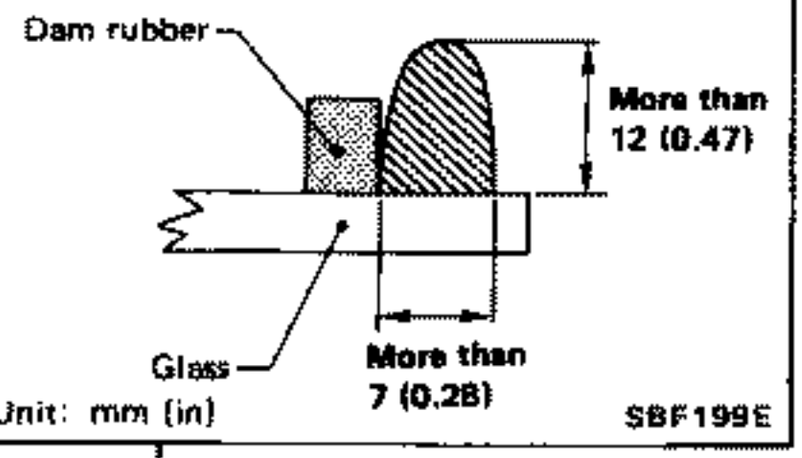

CAUTION:
Windshield glass should be installed within 15 minutes of applying sealant: sealant starts to harden 15 minutes after it is applied.

Set glass in position and press glass lightly and evenly.

Apply sealant additionally to lower portion of glass and make it uniform as shown below:

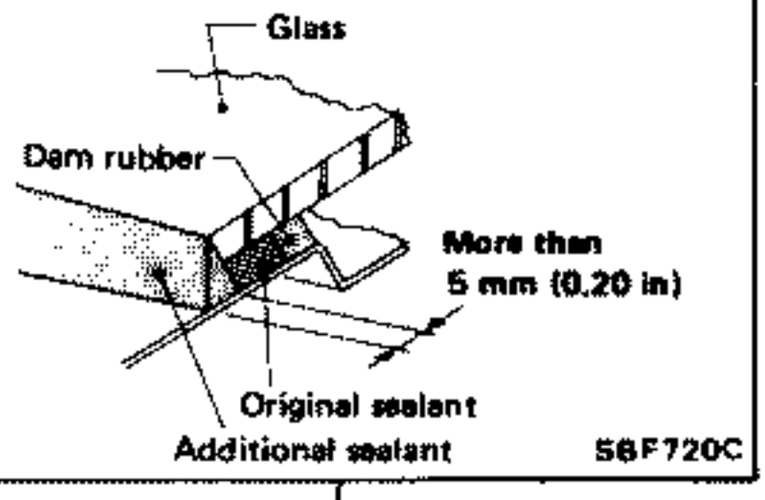

Check for water leakage.

CAUTION:
For sealant drying period, refer to "Drying Time for Sealant".

Apply sealant to upper & side molding fixing portion.

Set upper and side moldings.

Install lower molding.

CAUTION:
Molding must be installed securely so that it is in position and leaves no gap.

For details of moldings, refer to "Exterior".

Side Window

Spacer and clip portion

Unit: mm (in)

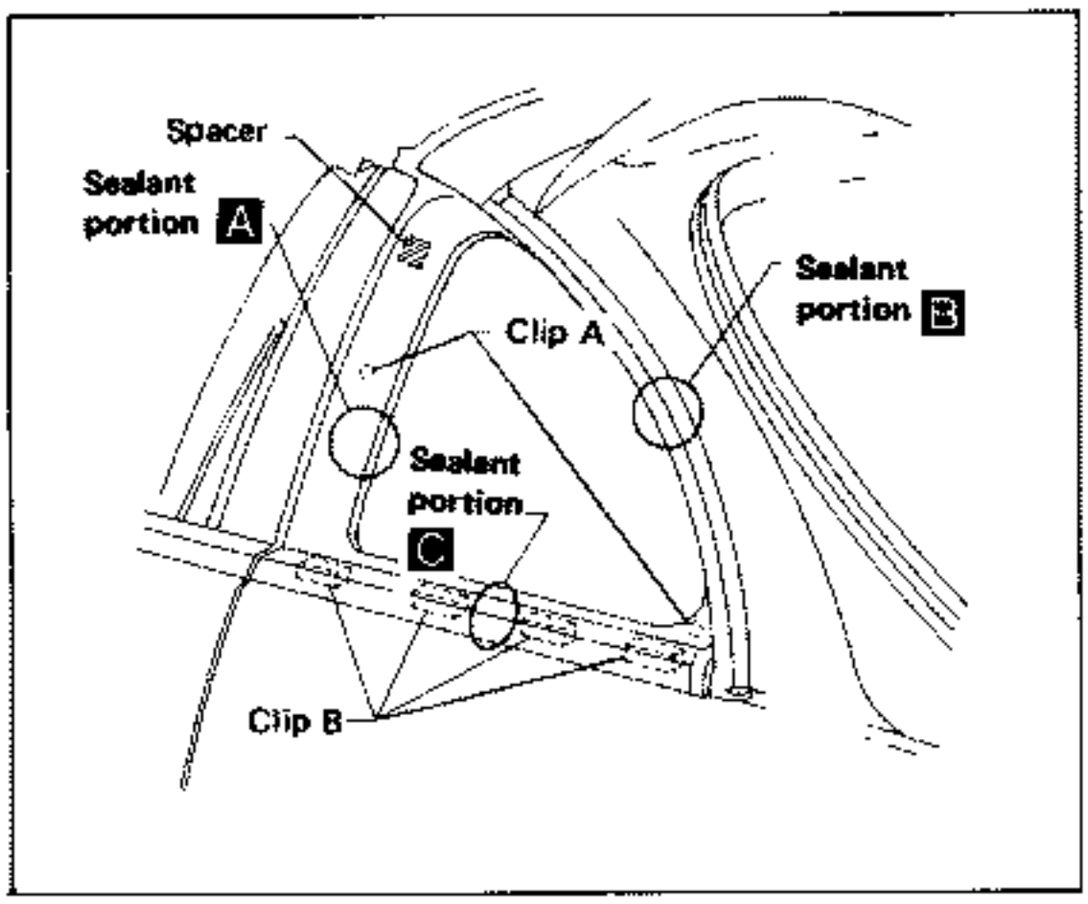

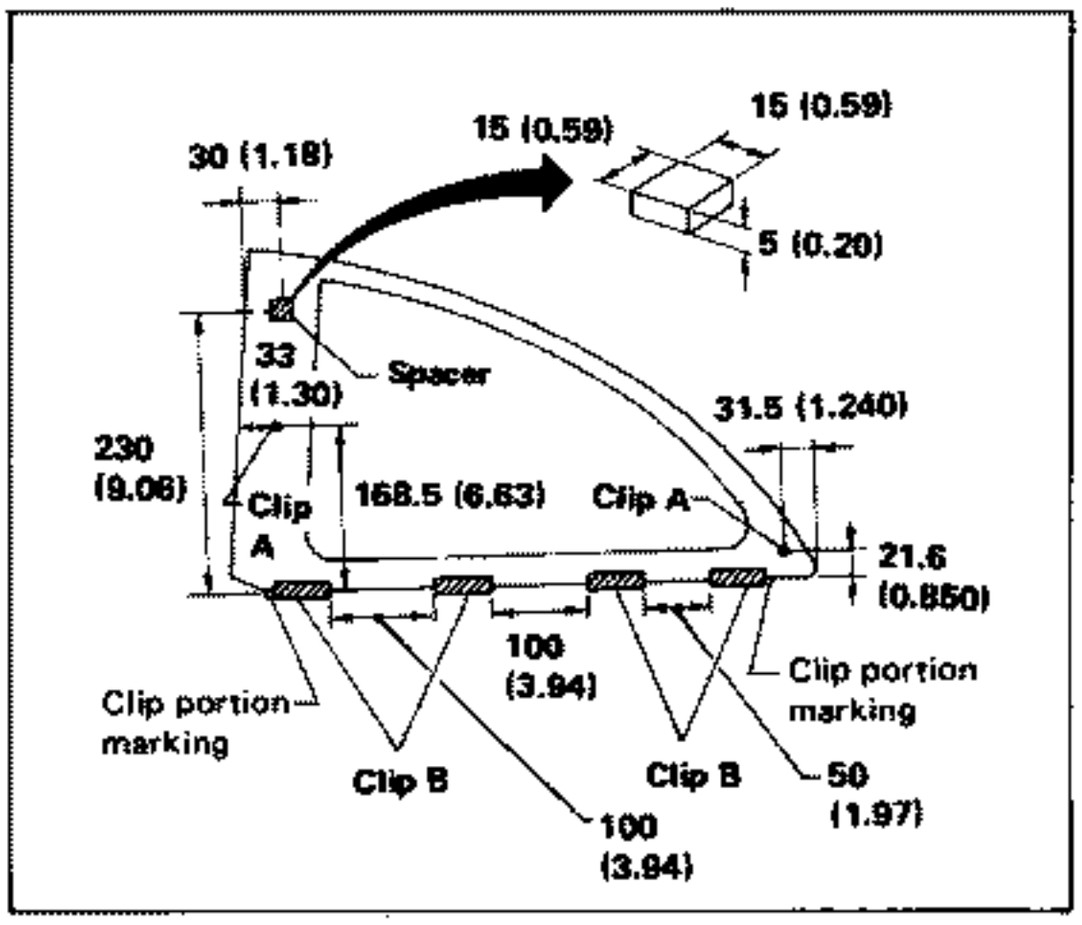

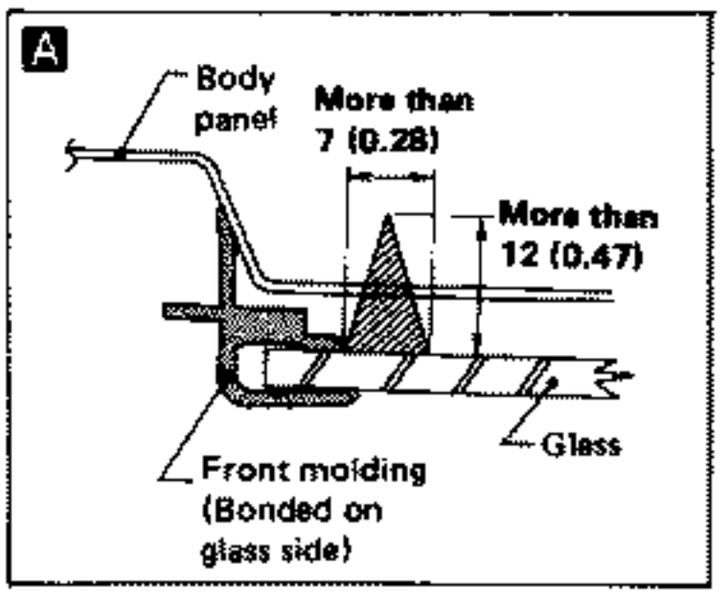

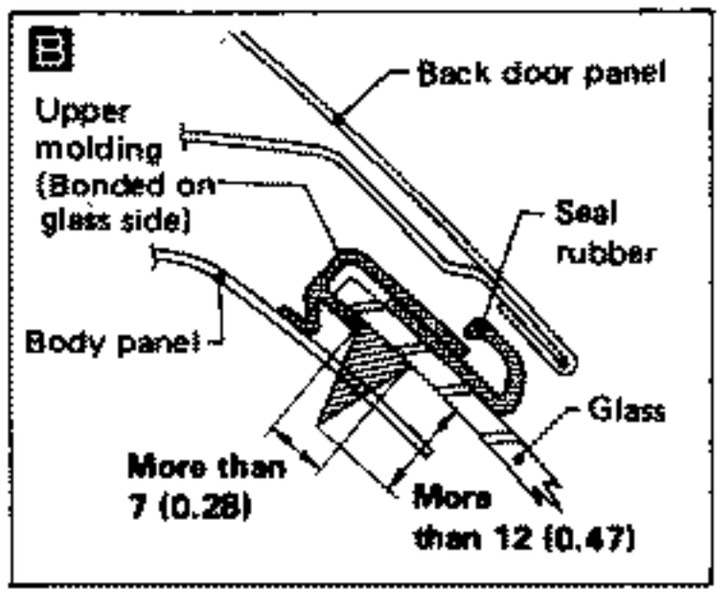

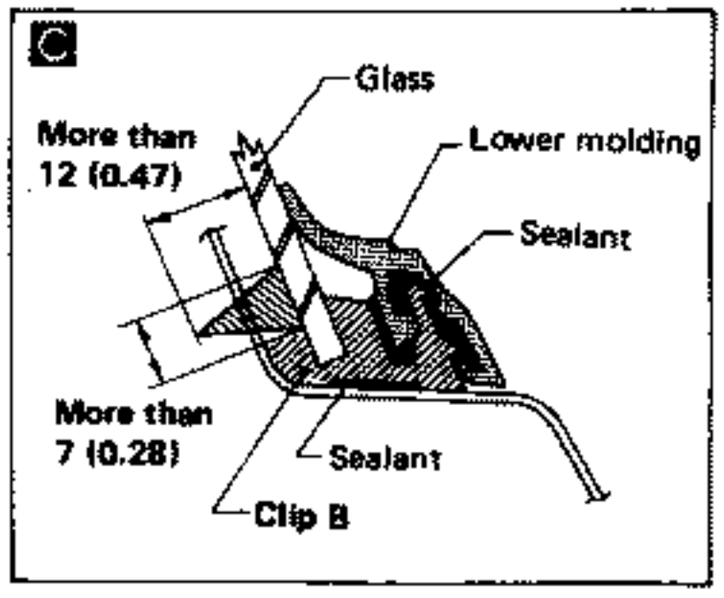

SBF555F

Back Door Window

- Construction and removal/reinstallation method of back door window are basically the same as those of windshield.
- For sealant drying time, refer to "Drying Time for Sealant".
- For details of moldings, refer to "Exterior".

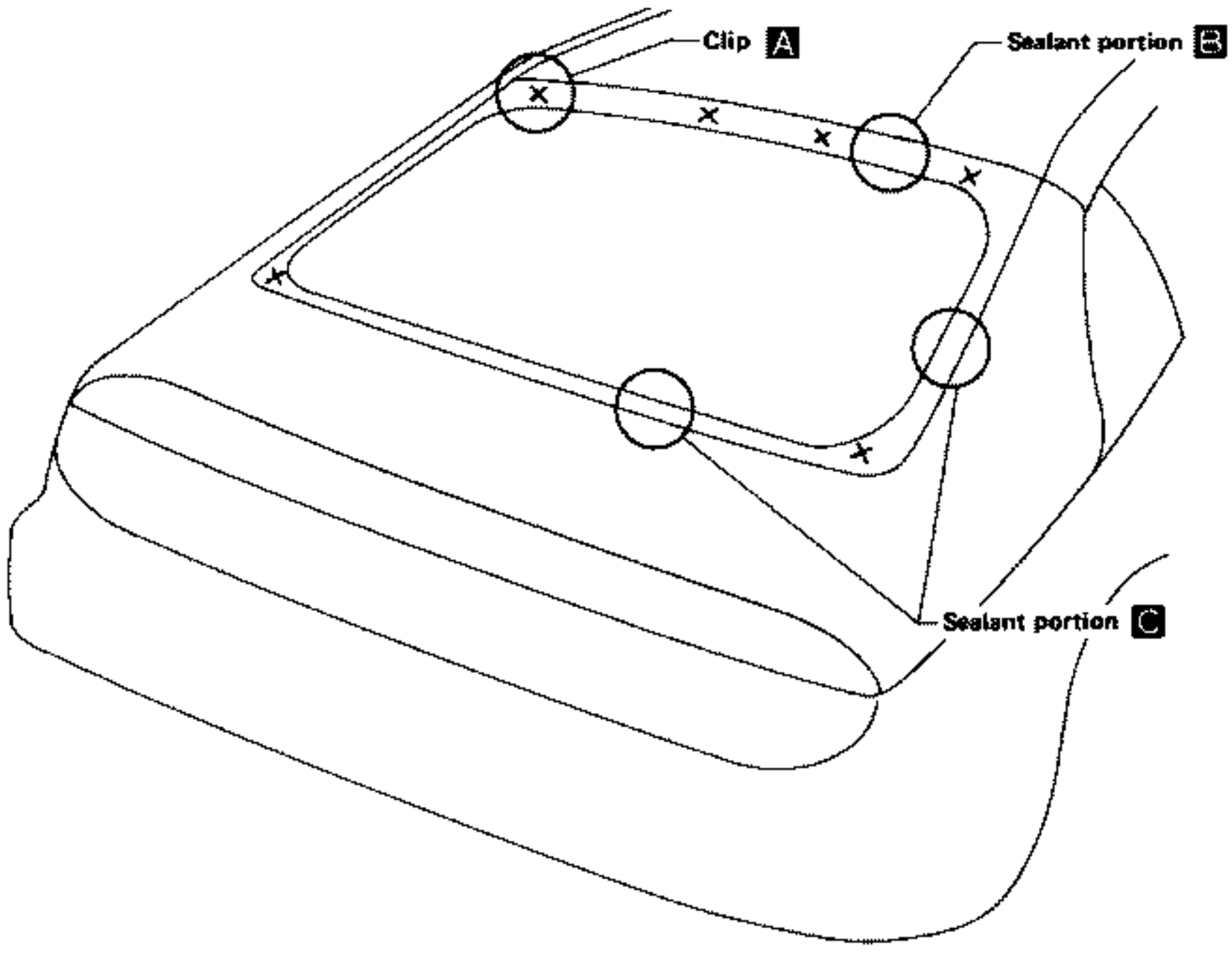

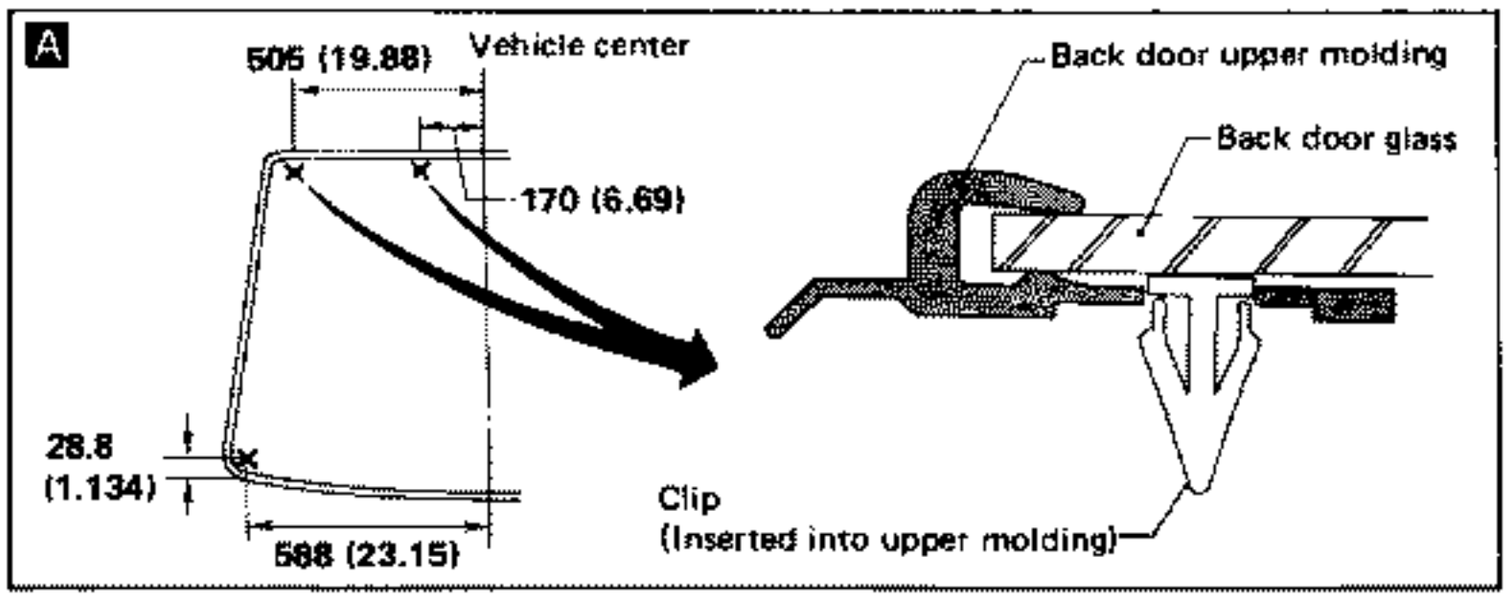

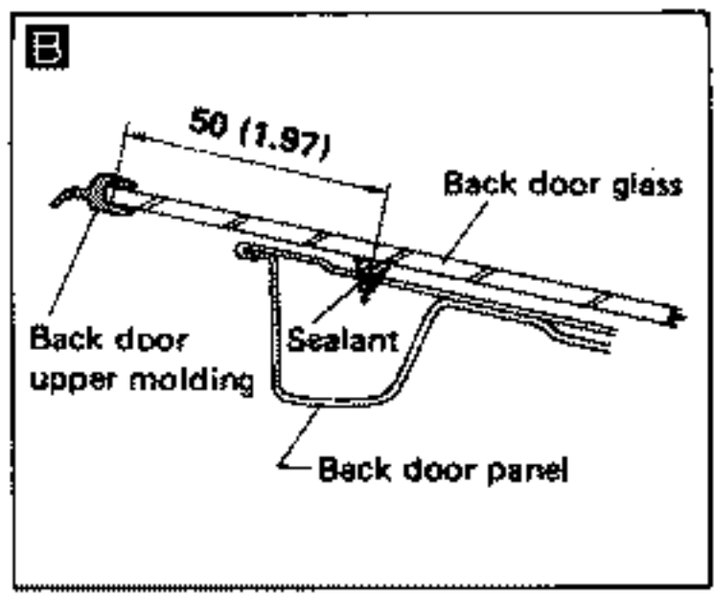

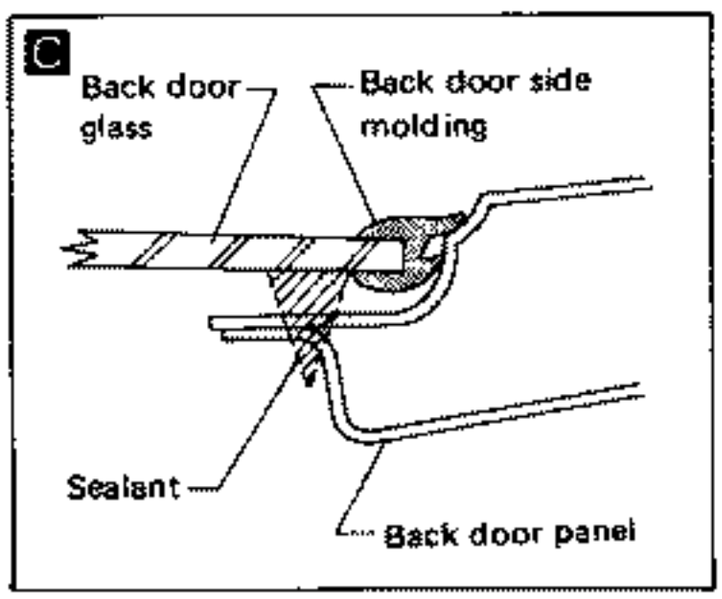

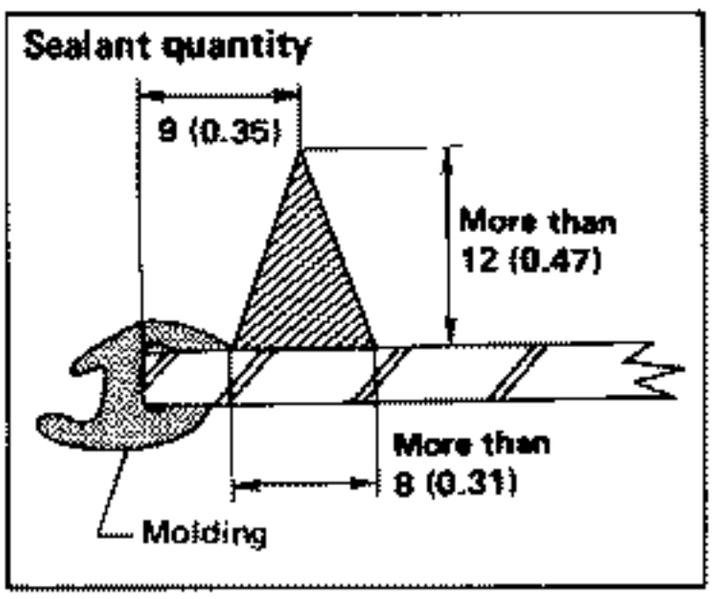

Unit: mm (in)

SBF884E

Drying Time for Sealant

Reference: Time required for sealant to dry to desired hardness.

Unit: days

Relative humidity % / Temperature °C (°F)	90	50	25
40 (104)	1.0	1.5	3.0
25 (77)	1.5	2.5	5.0
5 (41)	3.0	8.0	13.0

CAUTION:
Advise the user of the fact that vehicle should not be driven on rough roads or surfaces until sealant has properly vulcanized.

Repairing Water Leaks for Windshield, Side Window and Back Door Window

Leaks can be repaired without removing and reinstalling glass.

If water is leaking between caulking material and body or between glass and caulking material, determine the extent of the leak by applying water while pushing glass outward.

To stop the leak, apply primer and then sealant to the leak point.

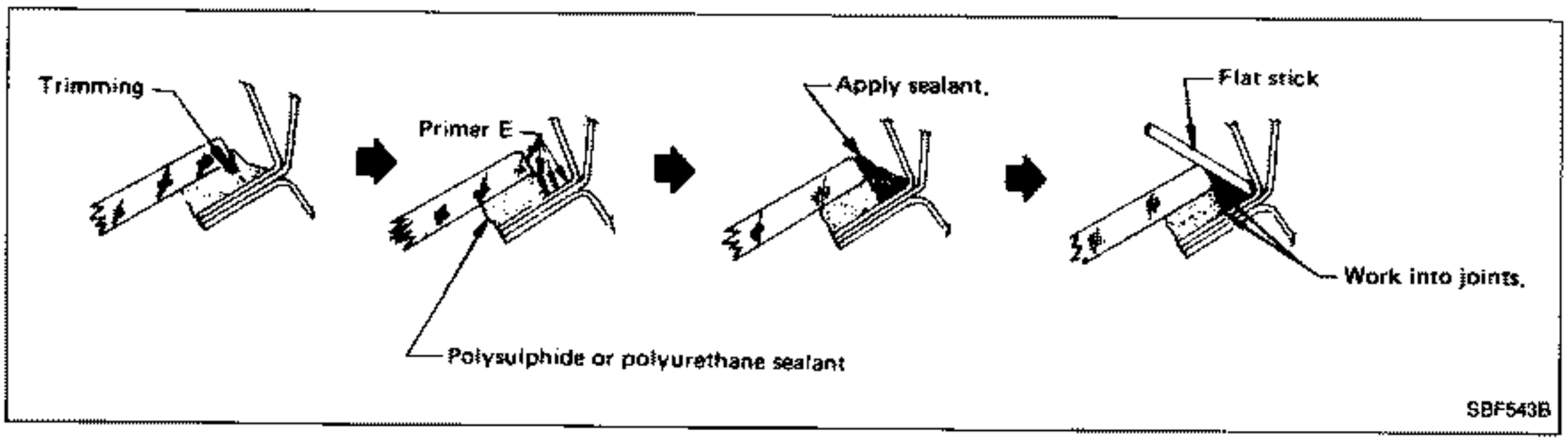

Afterwards, install molding securely.

Door Mirror

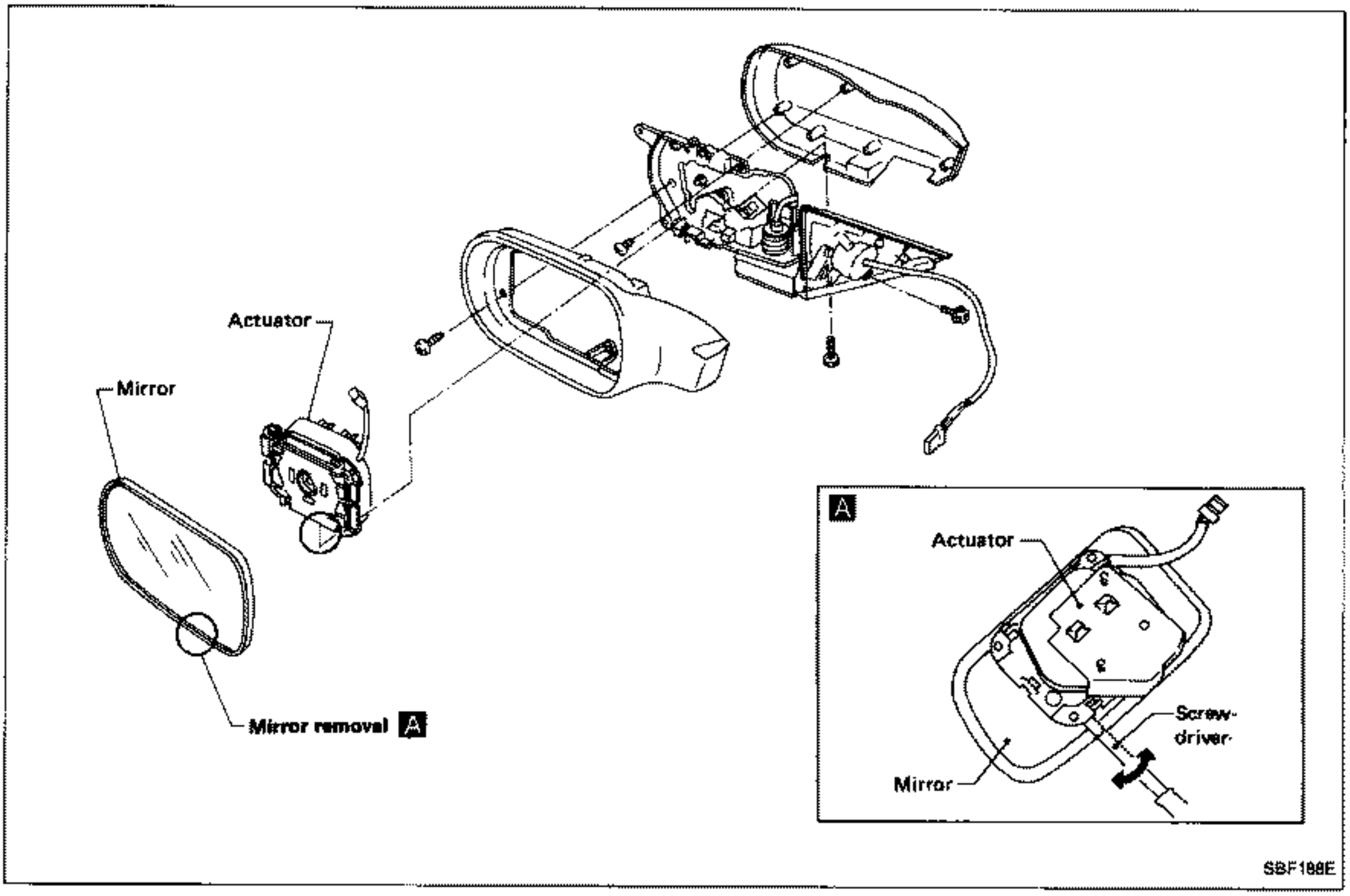
Actuator
Mirror
Mirror removal A
A
Actuator
Screw-driver
Mirror
SBF188E

Door Mirror (Cont'd)

WIRING DIAGRAM

Without door mirror defogger

L.H. drive model

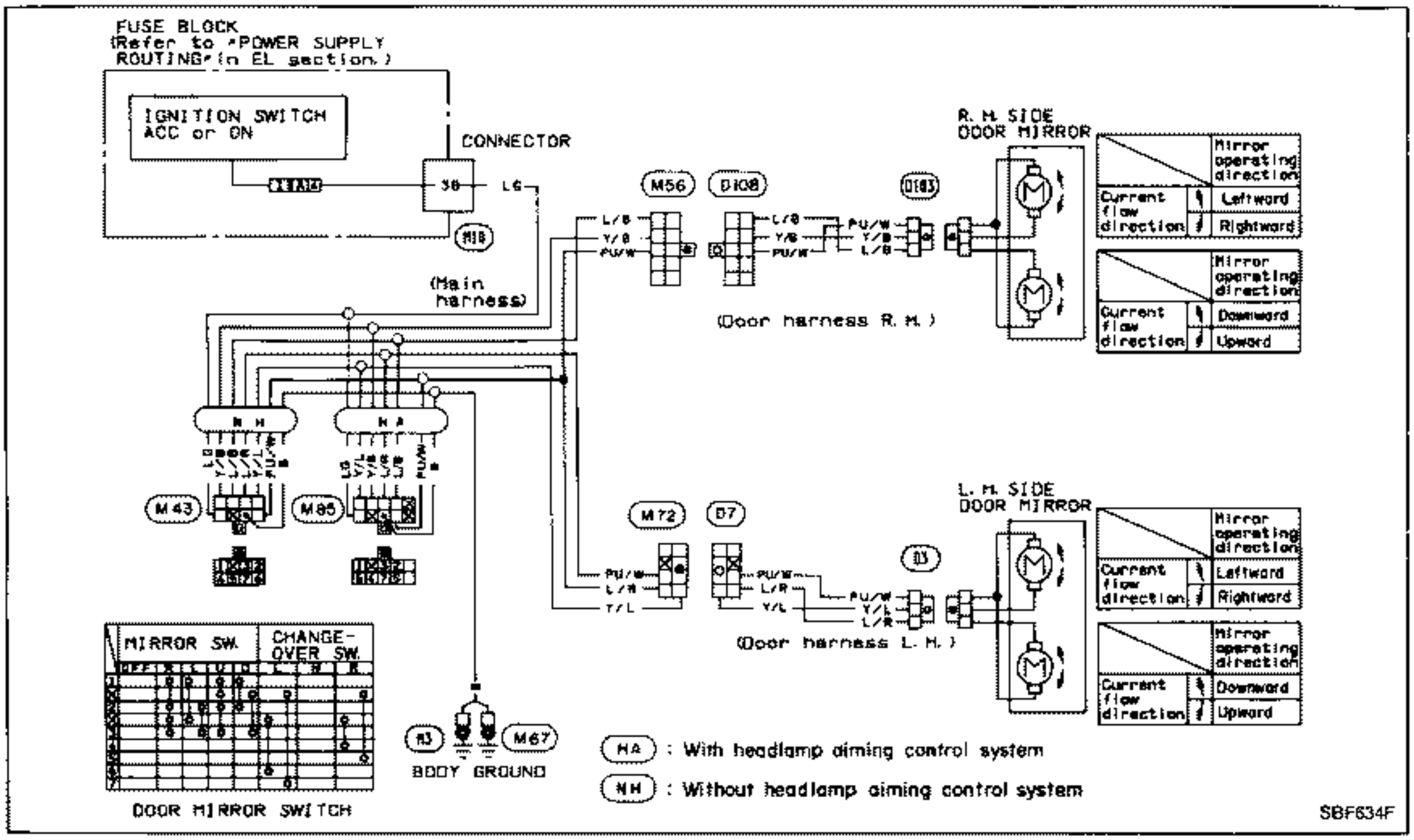

R.H. drive model

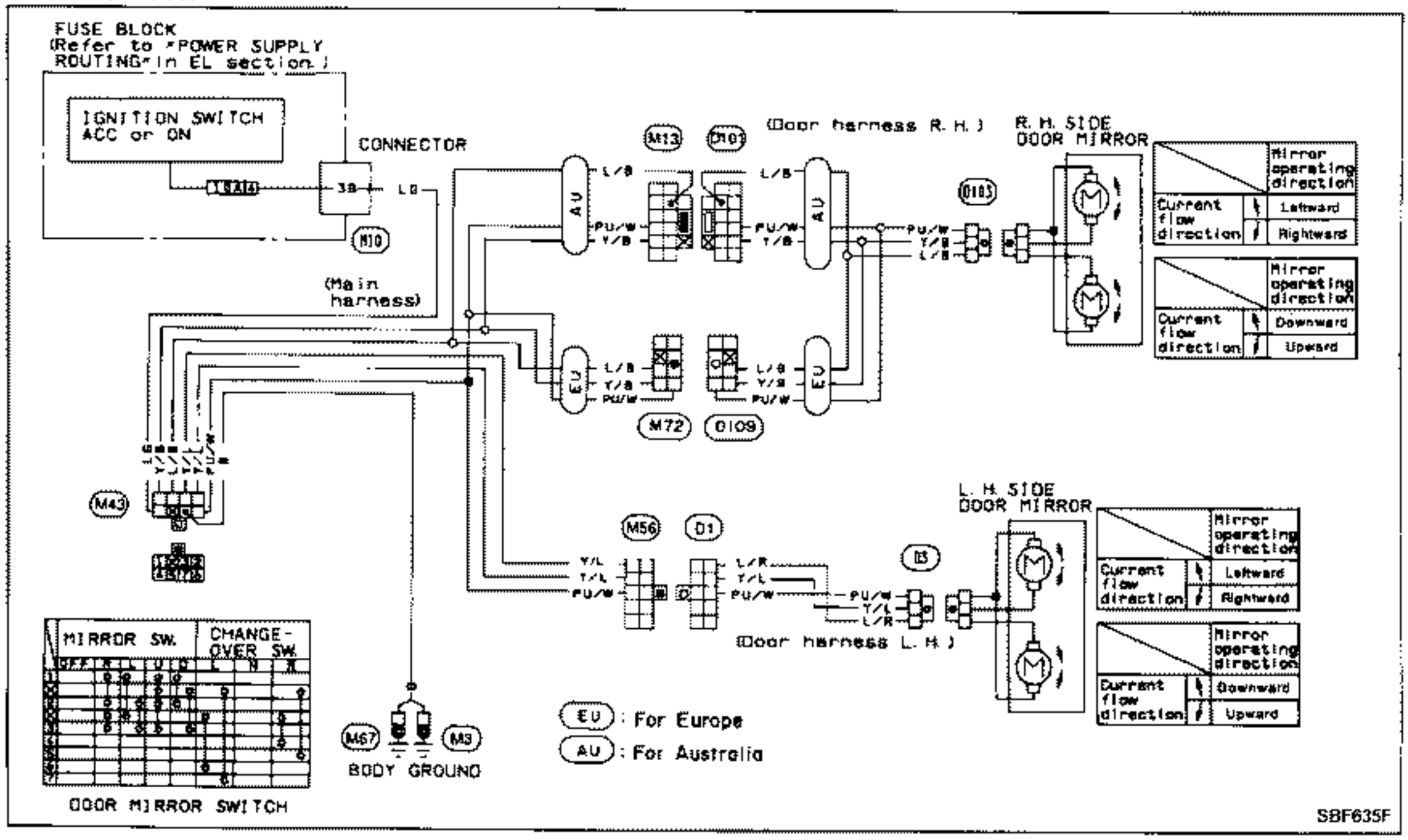

- All dimensions indicated in figures are actual ones.
- When a tram tracking gauge is used, adjust both pointers to equal length and check the pointers and gauge itself to make sure there is no free play.
- When a measuring tape is used, check to be sure there is no elongation, twisting or bending.
- Measurements should be taken at the center of the mounting holes.
- An asterisk (*) following the value at the measuring point indicates that the measuring point on the other side is symmetrically the same value.
- The coordinates of the measurement points are the distances measured from the standard line of "X", "Y" and "Z".

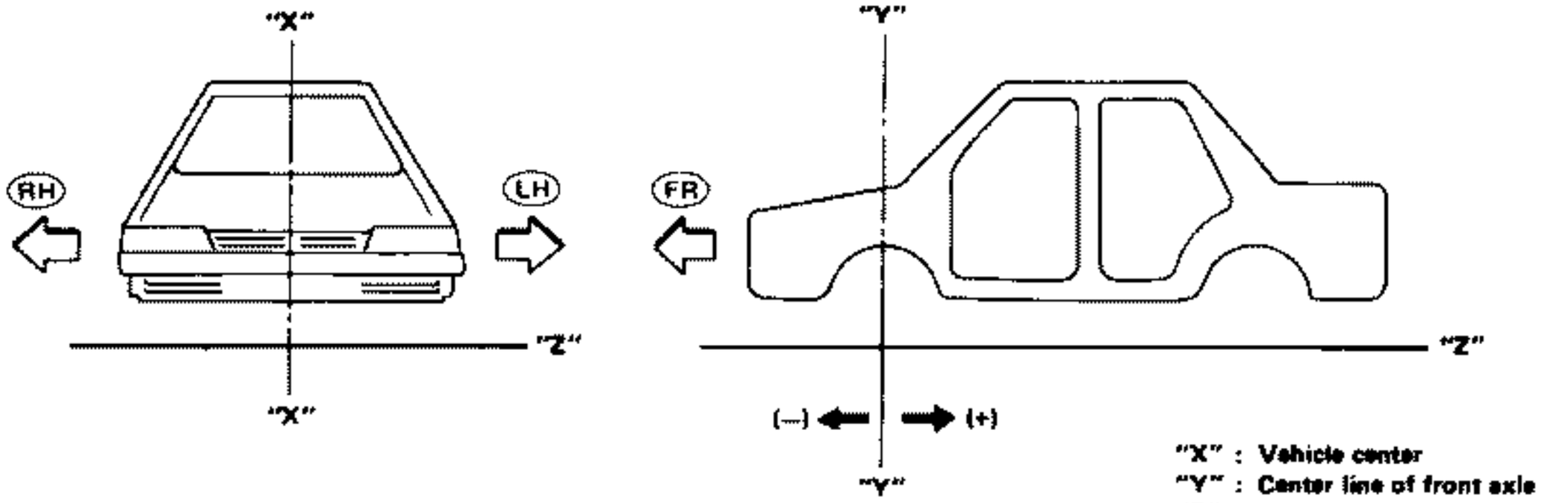

(LH) : L.H. side
(RH) : R.H. side

Engine Compartment

MEASUREMENT

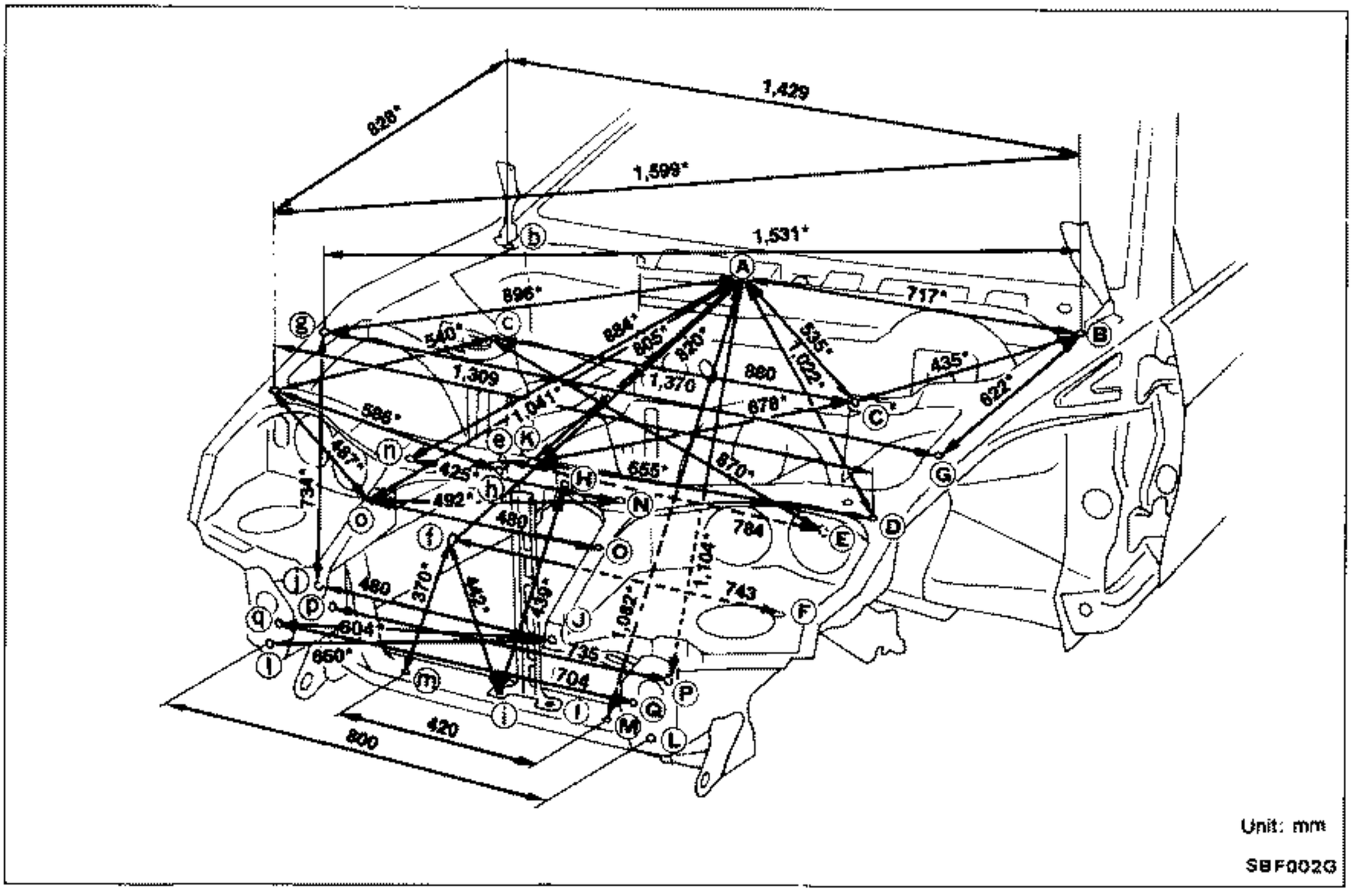

Engine Compartment (Cont'd)

MEASUREMENT POINTS

Unit: mm

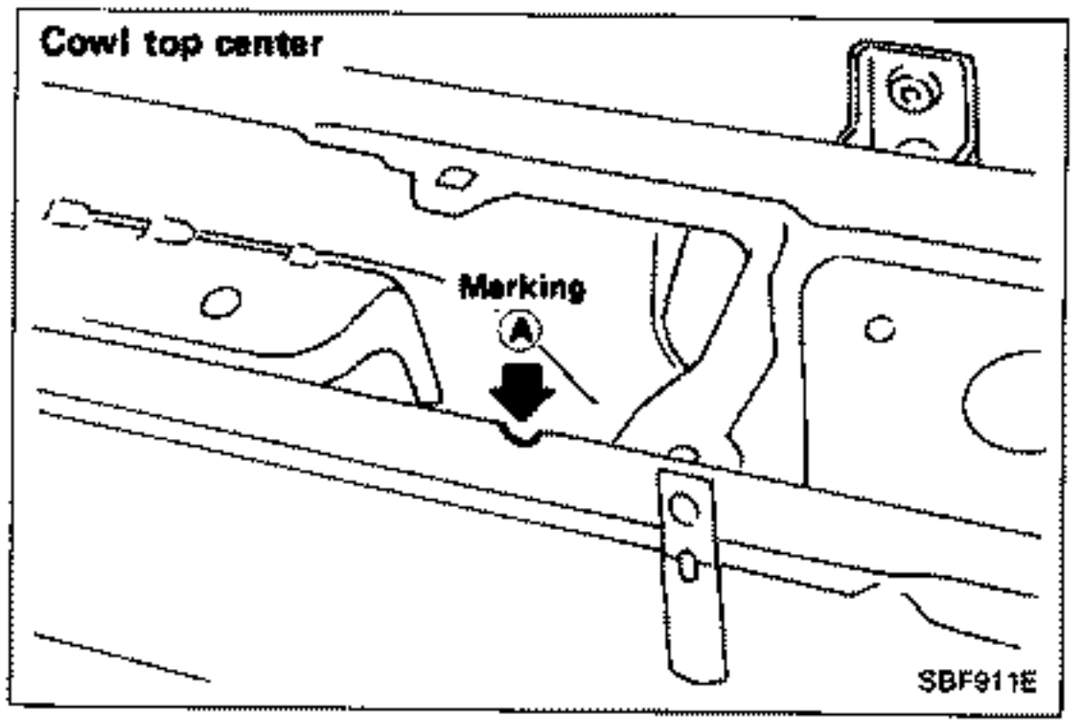

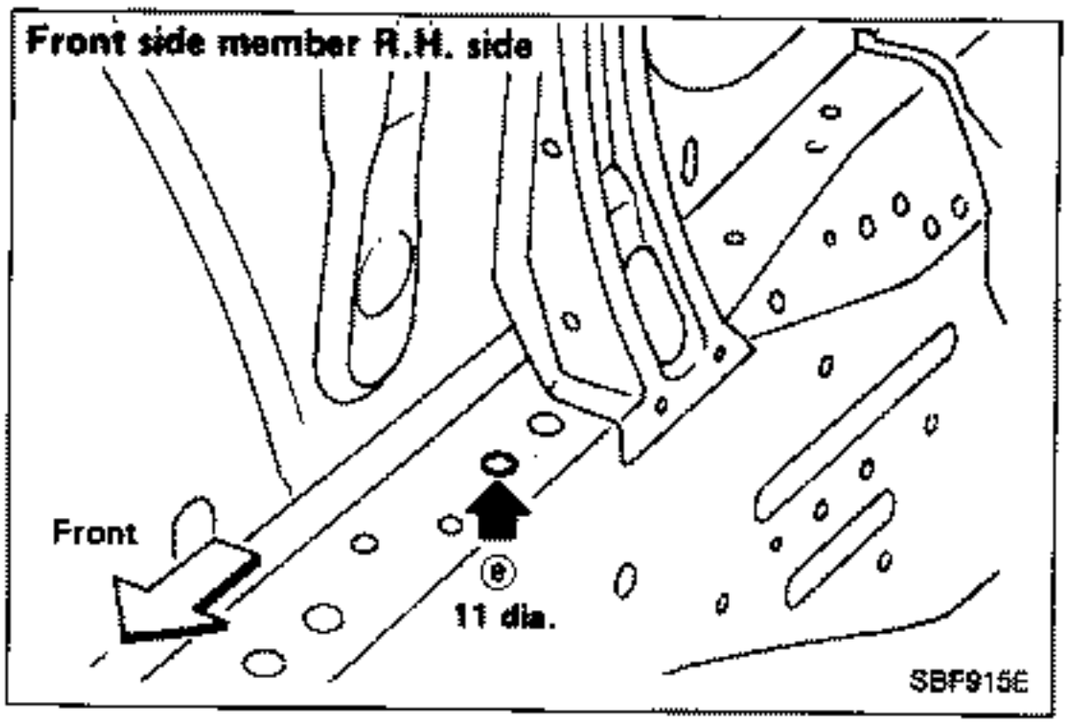

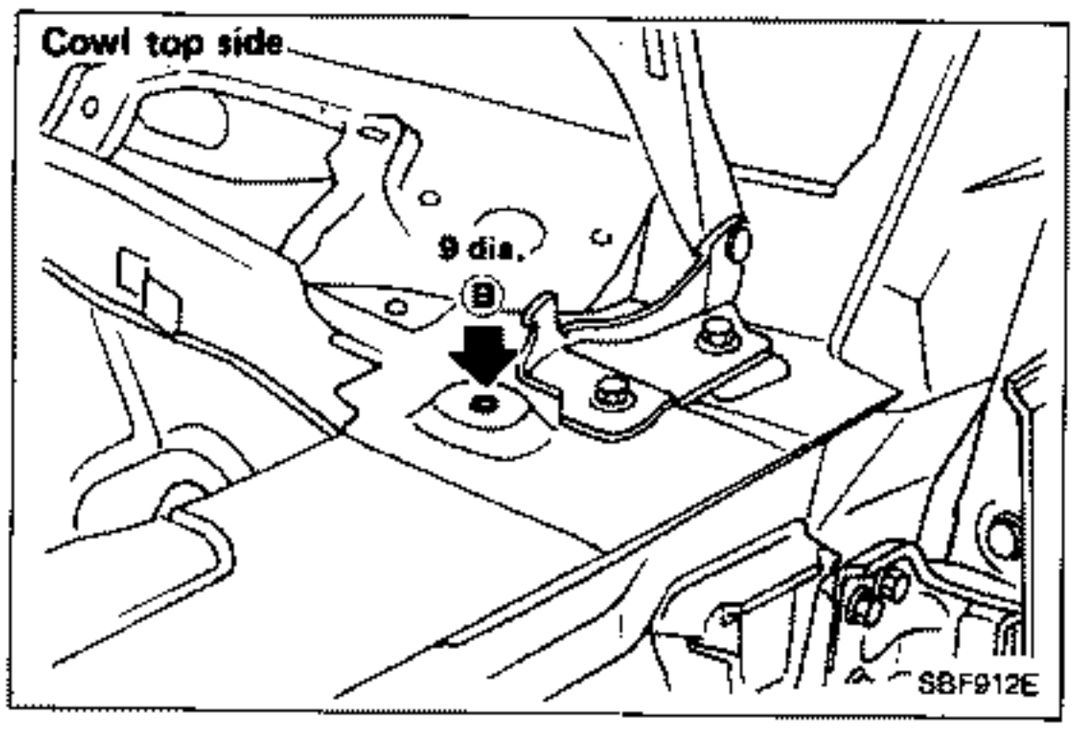

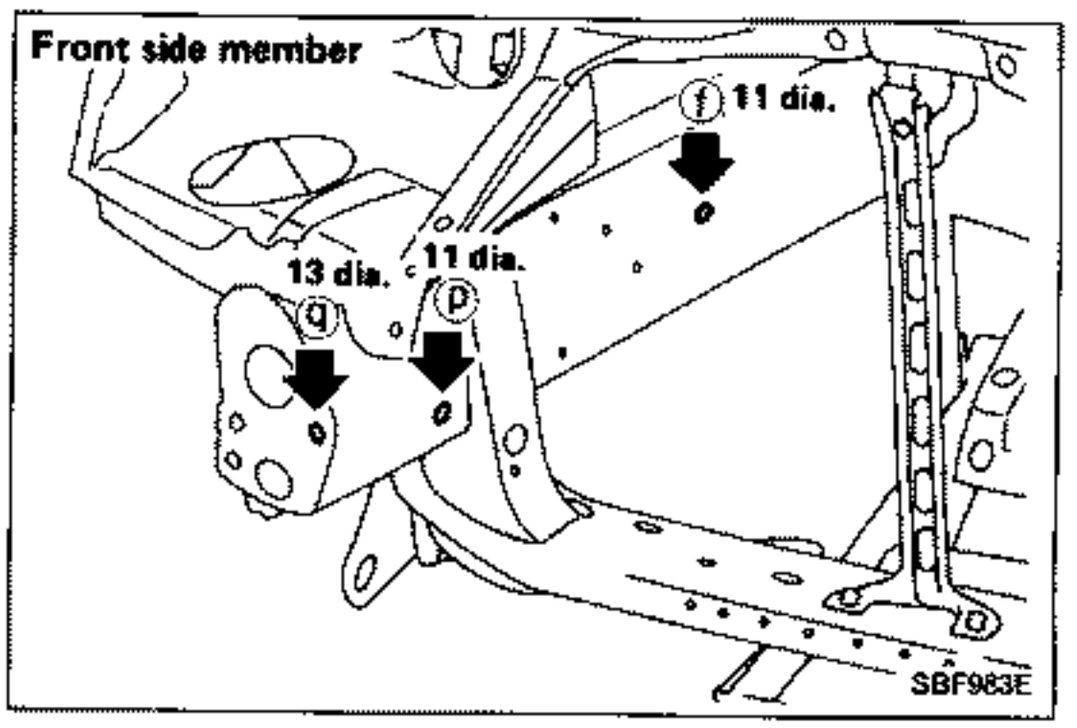

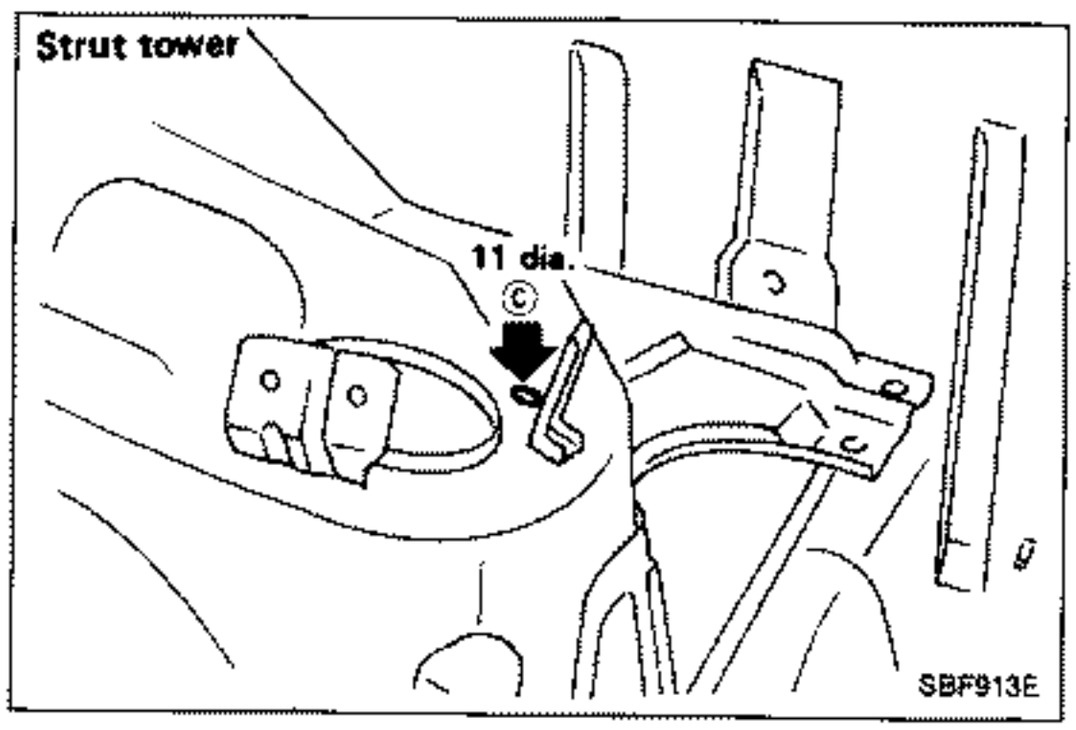

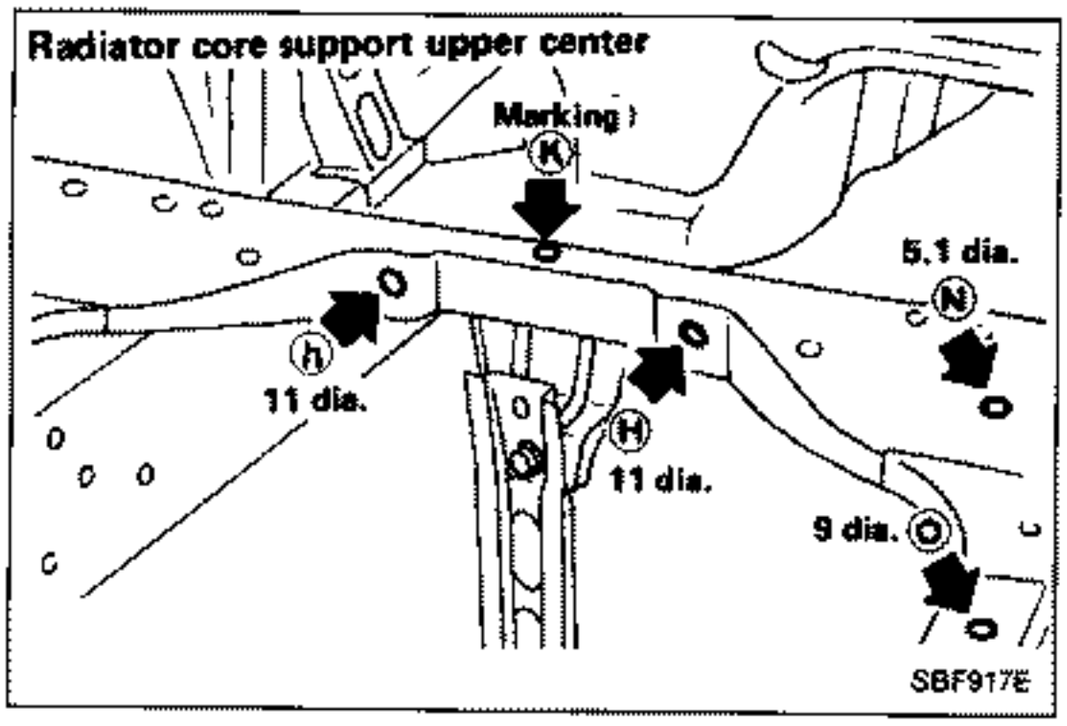

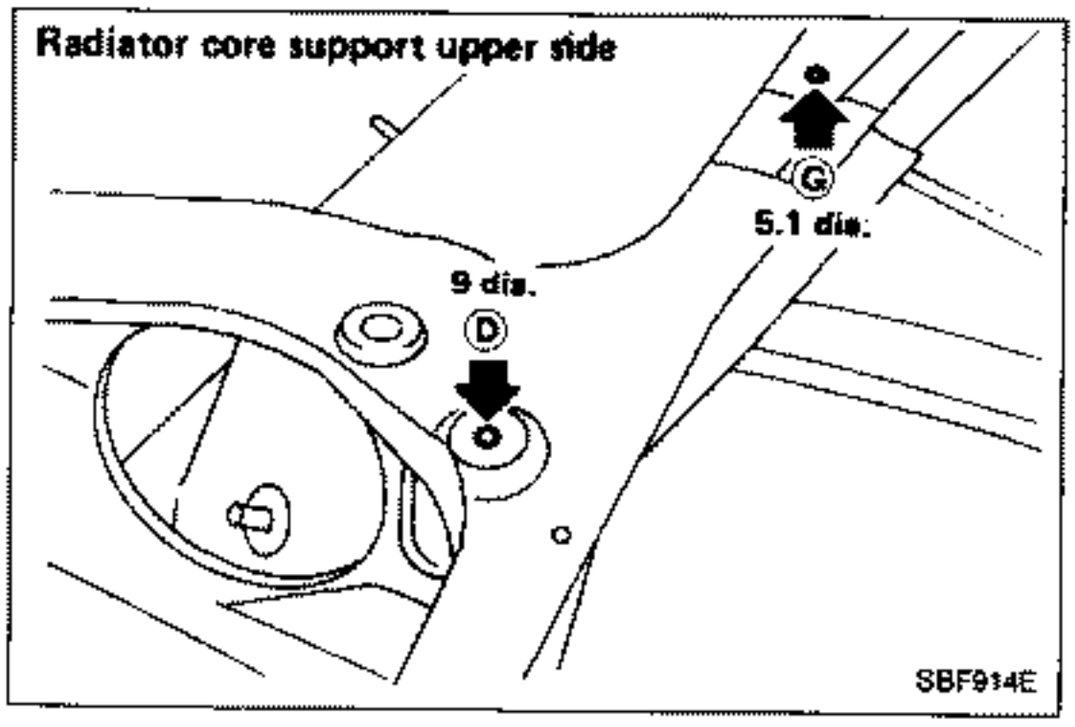

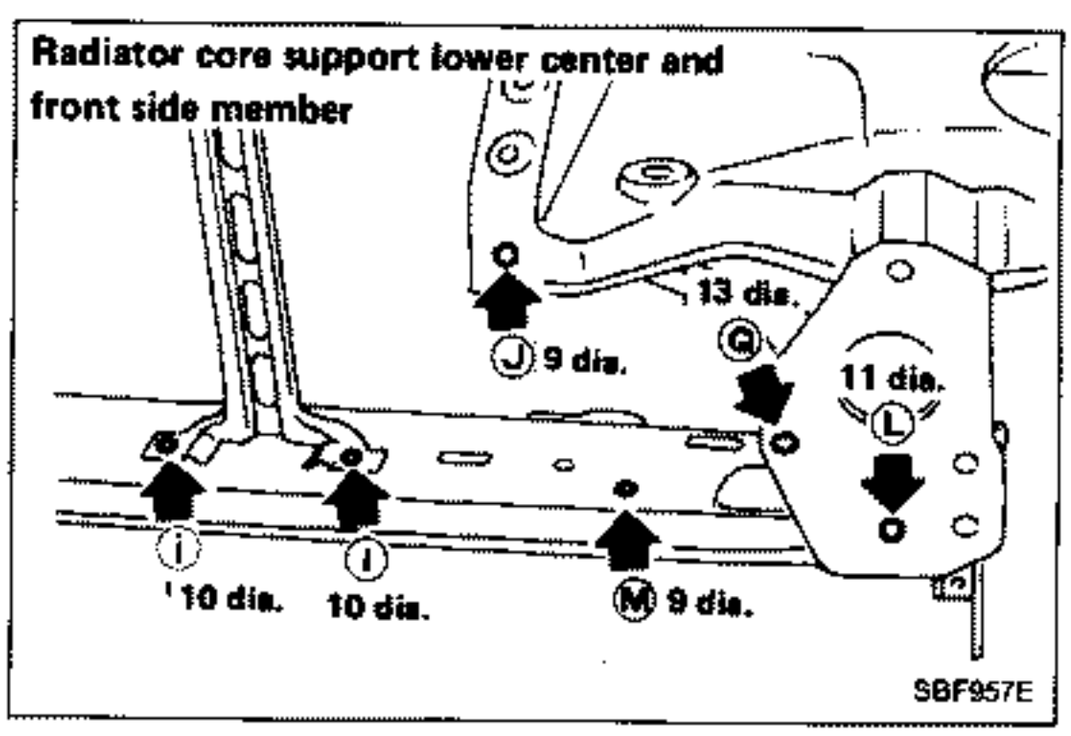

Underbody

MEASUREMENT

Unit: mm

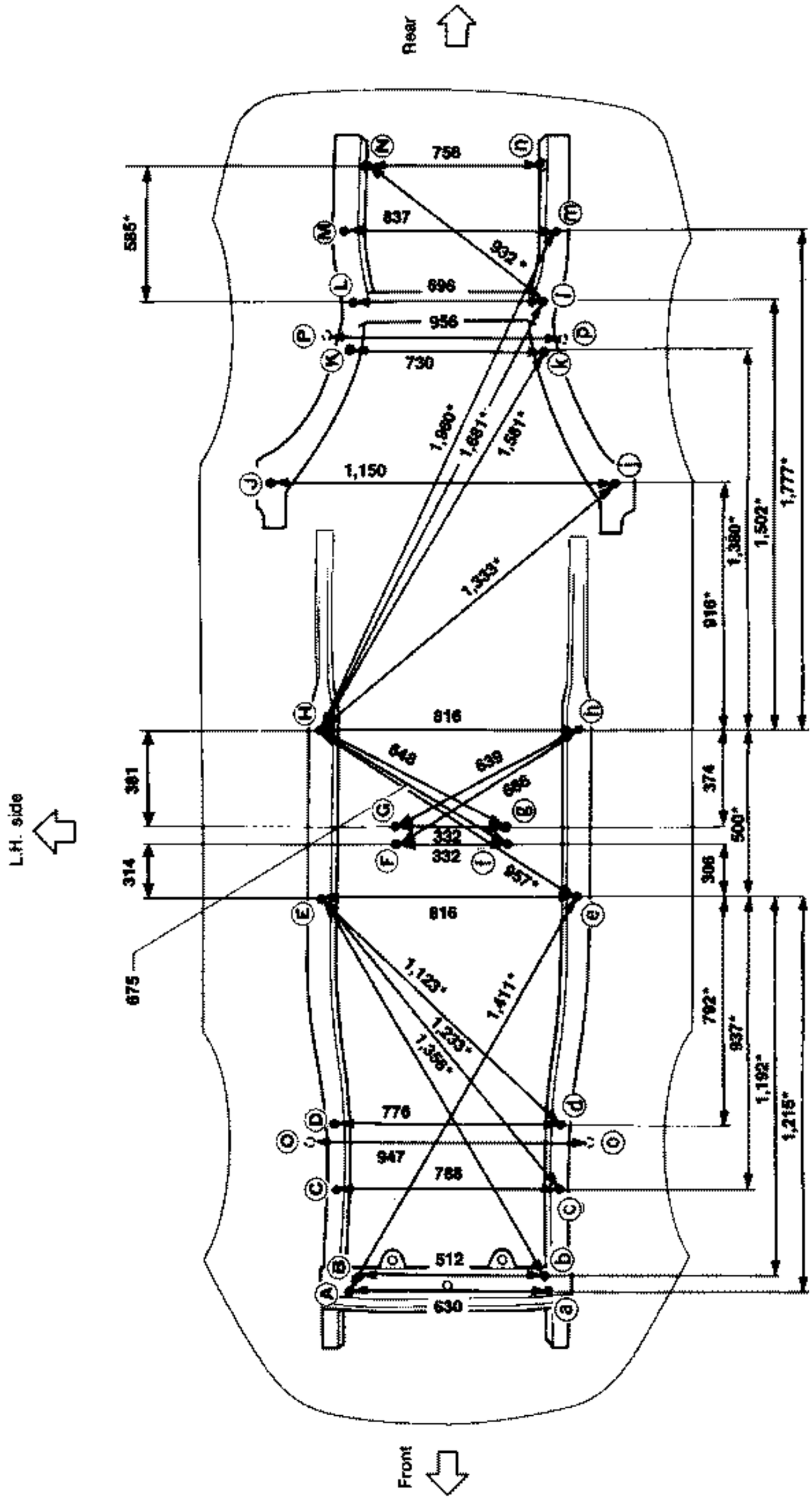

All dimensions indicated in this figure are actual ones.
(There are no projected dimensions.)

SBF563F

MEASUREMENT POINTS

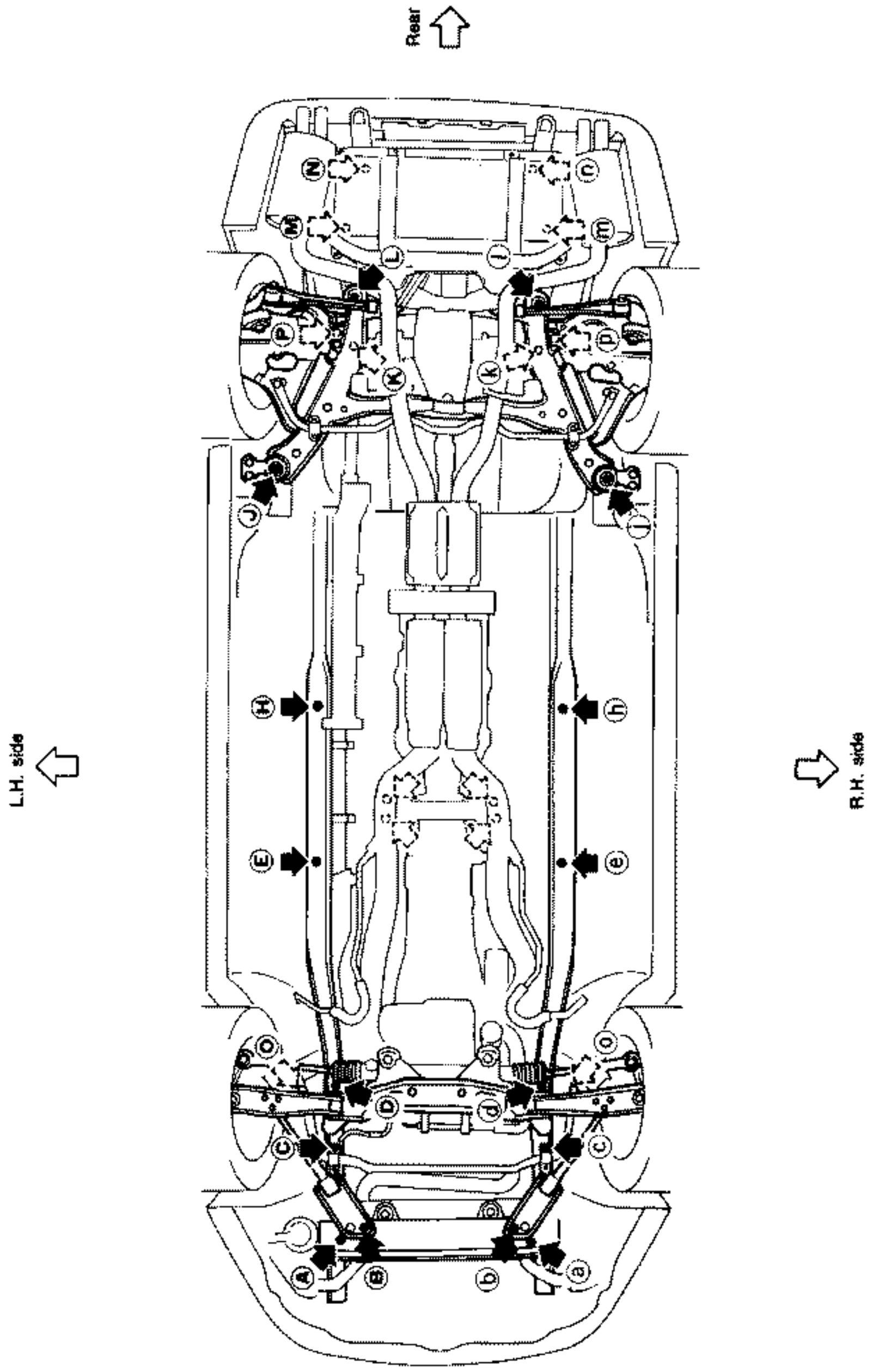

SBF125H

Underbody (Cont'd)

Unit: mm

Front and rear strut tower centers

Coordinates:

Ⓞ, ⓞ
X: 473.4
Y: 52.3
Z: 727.2

Ⓟ, ⓟ
X: 477.9
Y: 2,609.3
Z: 727.8

Front: Ⓞ, ⓞ 82.6 dia.
Rear: Ⓟ, ⓟ 46 dia.

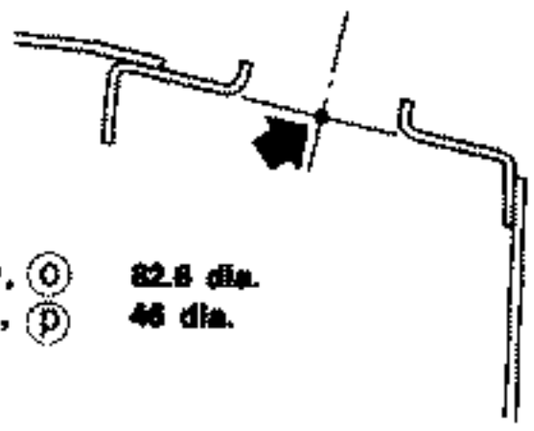

SBF565FA

Front side member and front extension

Coordinates:

Ⓐ, ⓐ
X : 315
Y : –460
Z : 205.1

Ⓑ, ⓑ
X : 255.8
Y : –431
Z : 205.1

Ⓒ, ⓒ
X : 394
Y : –170
Z : 330

Ⓓ, ⓓ
X : 388
Y : –22
Z : 330

Ⓔ, ⓔ
X : 406.2
Y : 750
Z : 152.6

Ⓕ
X : 161
Y : 917
Z : 249

ⓕ
X : 171
Y : 917
Z : 249

Ⓖ
X : 161
Y : 977
Z : 249

ⓖ
X : 171
Y : 977
Z : 249

Ⓗ, ⓗ
X : 406.2
Y : 1,250
Z : 152.6

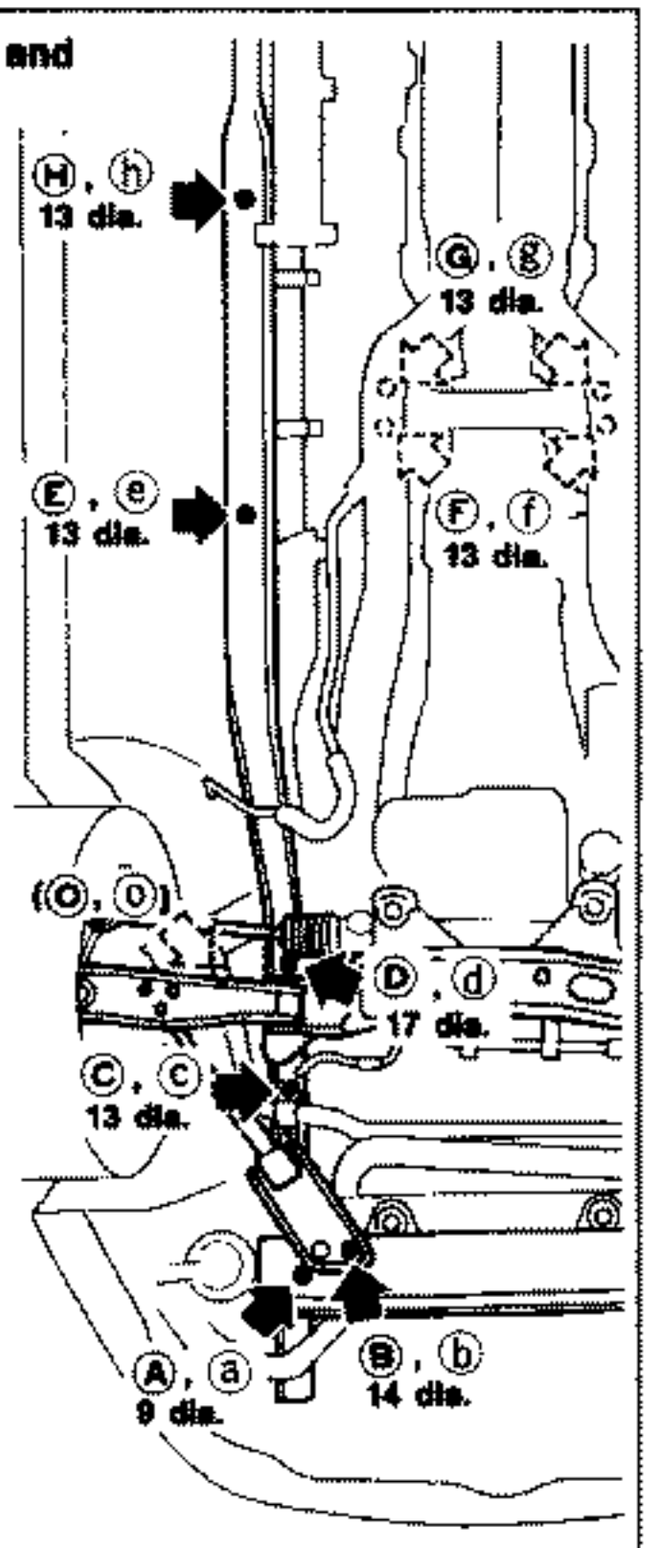

SBF126H

Rear side member and rear extension

Ⓙ, ⓙ
X: 575
Y: 2,150
Z: 180.7

Ⓚ, ⓚ
X: 365
Y: 2,625
Z: 259.6

Ⓛ, ⓛ
X: 348
Y: 2,740
Z: 334.3

Ⓜ, ⓜ
X: 418.5
Y: 3,000
Z: 469.8

Ⓝ, ⓝ
X: 378
Y: 3,290
Z: 530

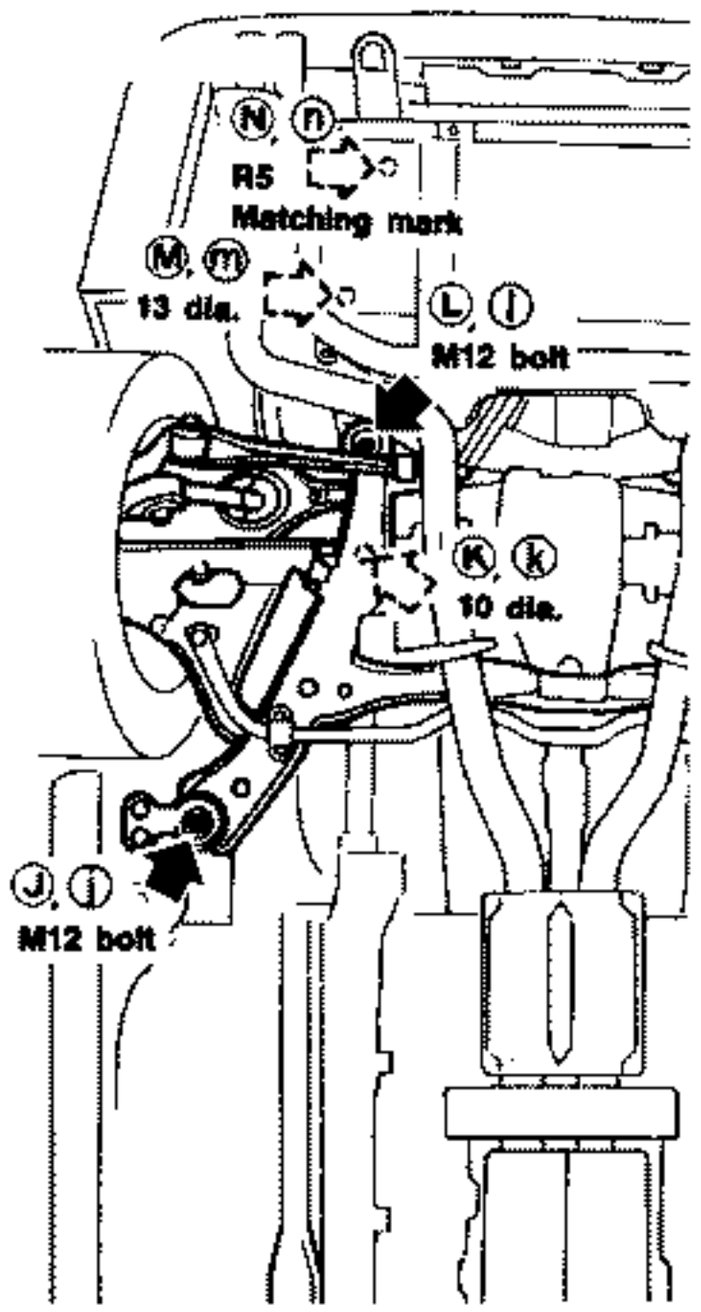

SBF567F

HEATER & AIR CONDITIONER

SECTION HA

CONTENTS

AIR FLOW AND COMPONENT LAYOUT — Manual Air Conditioner ..... HA- 2
DOOR CONTROL — Manual Air Conditioner ..... HA- 5
HEATER ELECTRICAL CIRCUIT — Manual Air Conditioner ..... HA- 7
PRECAUTIONS ..... HA- 8
PRECAUTIONS FOR REFRIGERANT CONNECTION ..... HA- 10
PREPARATION ..... HA- 11
EVACUATING, CHARGING AND CHECKING ..... HA- 20
DESCRIPTION — Manual Air Conditioner ..... HA- 34
SERVICE PROCEDURES ..... HA- 38
A/C PERFORMANCE TEST ..... HA- 44
COMPRESSOR OIL — For MJS170 (HITACHI make) ..... HA- 52
COMPRESSOR — Model MJS170 (HITACHI make) ..... HA- 54
A/C ELECTRICAL CIRCUIT — Manual Air Conditioner ..... HA- 62
TROUBLE DIAGNOSES — Manual Air Conditioner ..... HA- 64
DESCRIPTION — Auto Air Conditioner ..... HA- 95
DOOR CONTROL — Auto Air Conditioner HA-107
A/C ELECTRICAL CIRCUIT — Auto Air Conditioner HA-110
TROUBLE DIAGNOSES — Auto Air Conditioner HA-112
SERVICE DATA AND SPECIFICATIONS (S.D.S.) HA-168

When you read wiring diagrams:
- **Read GI section, "HOW TO READ WIRING DIAGRAMS".**
- **See EL section, "POWER SUPPLY ROUTING" for power distribution circuit.**

When you perform trouble diagnoses, read GI section, "HOW TO FOLLOW FLOW CHART IN TROUBLE DIAGNOSES".

Air Flow

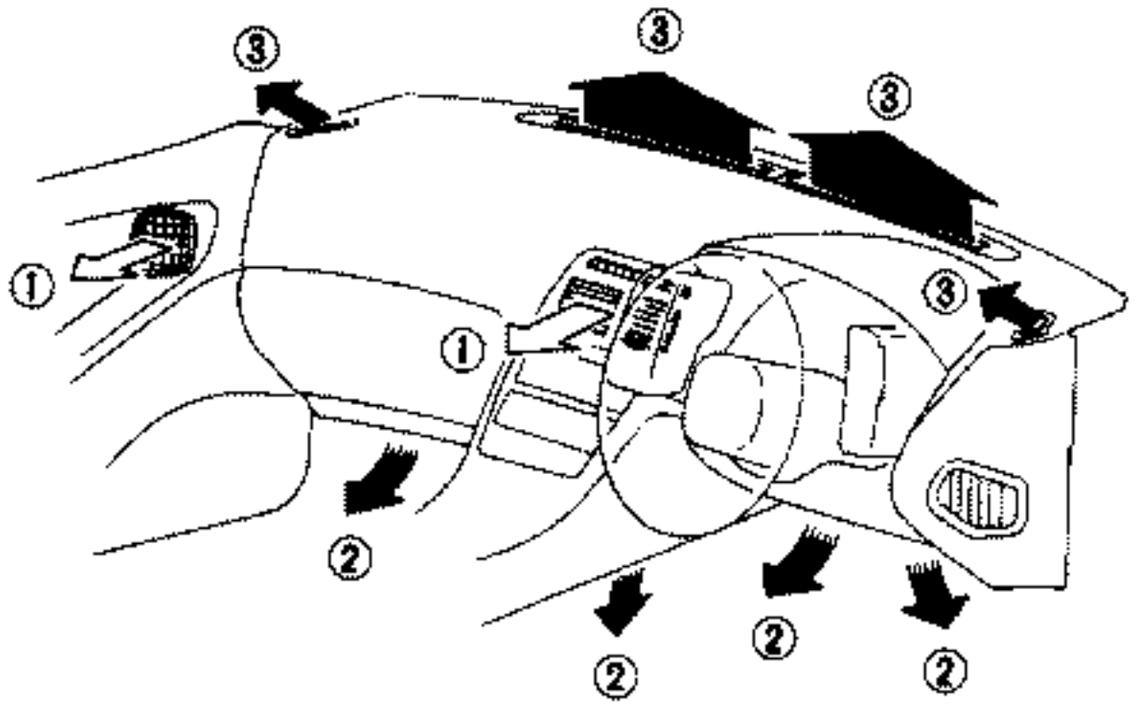

Ventilation

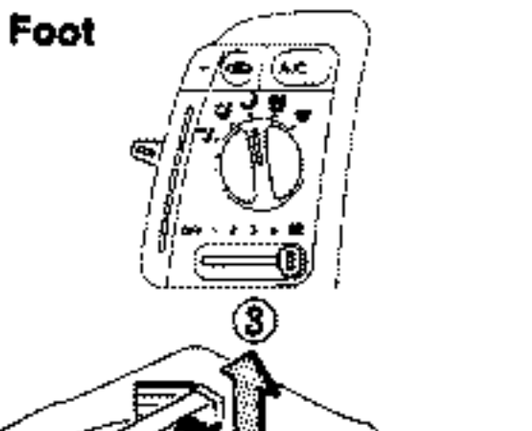

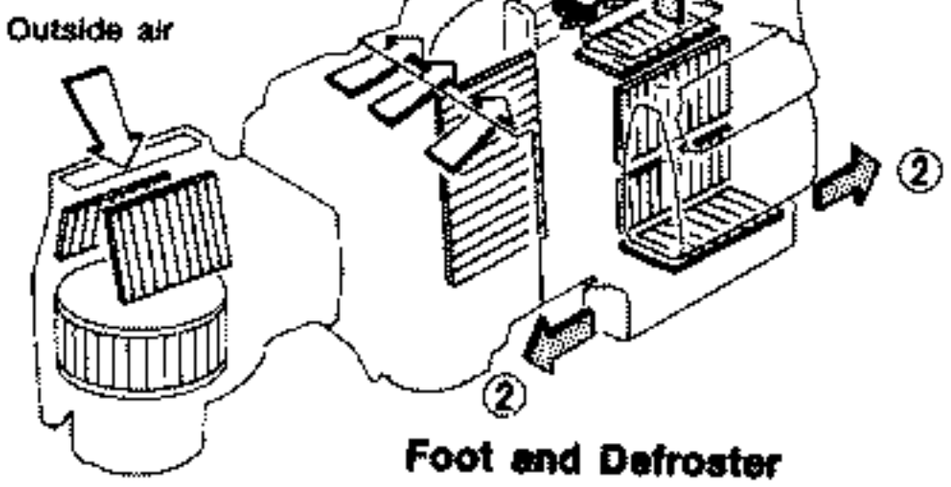

Foot and Defroster

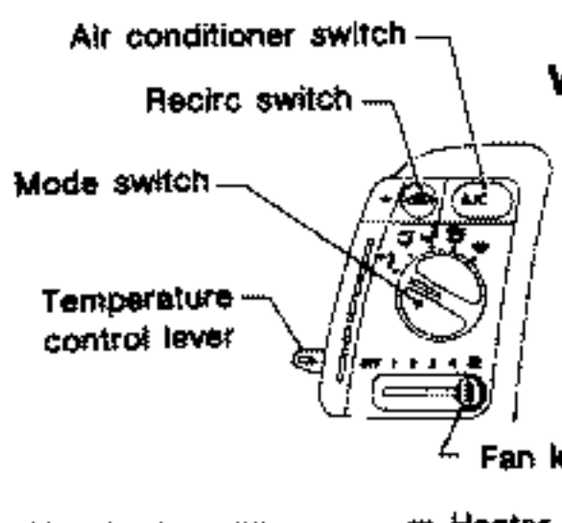

① ... To ventilator
② ... To floor
③ ... To defroster

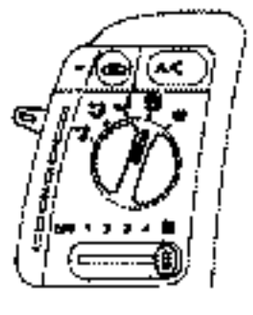

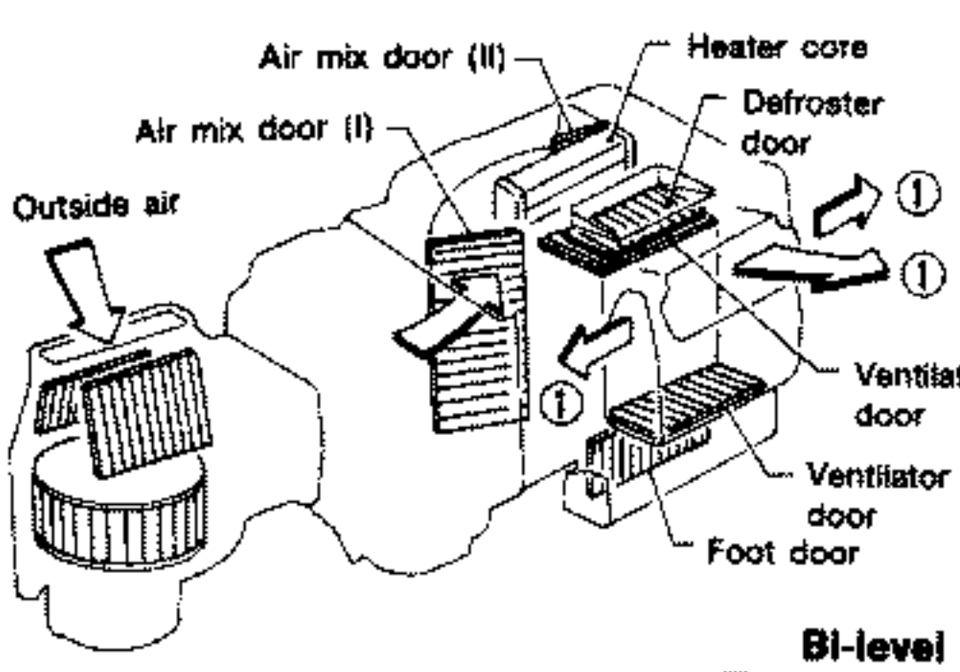

Bi-level

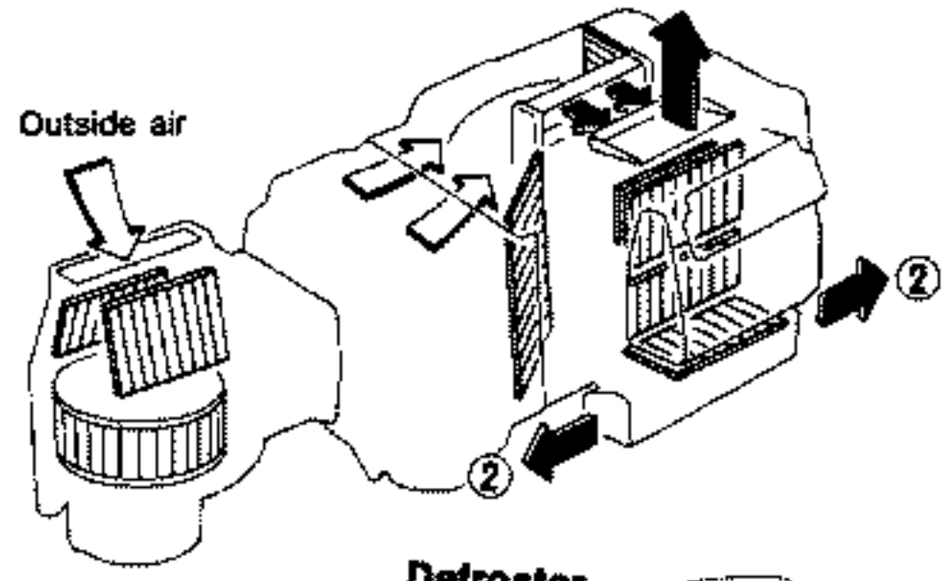

Defroster



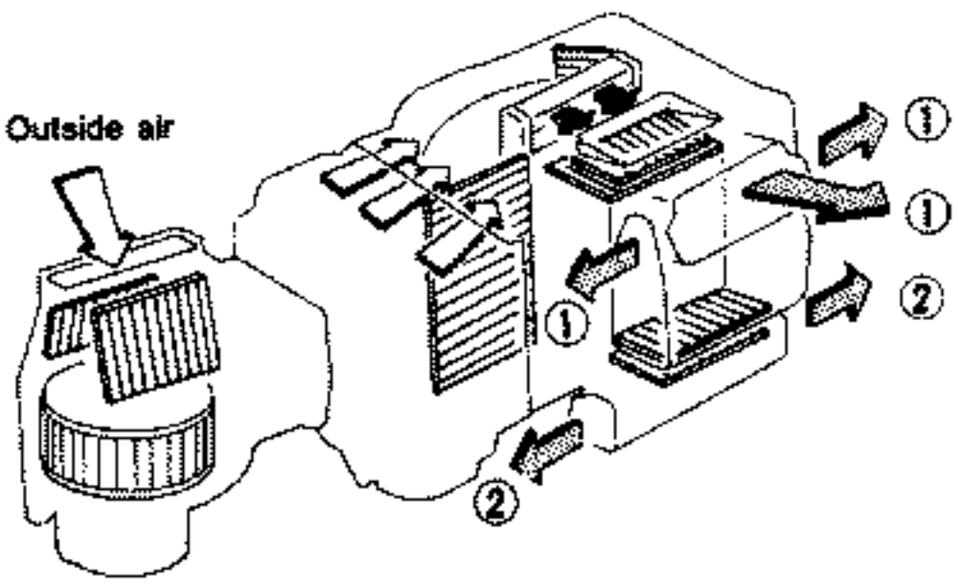

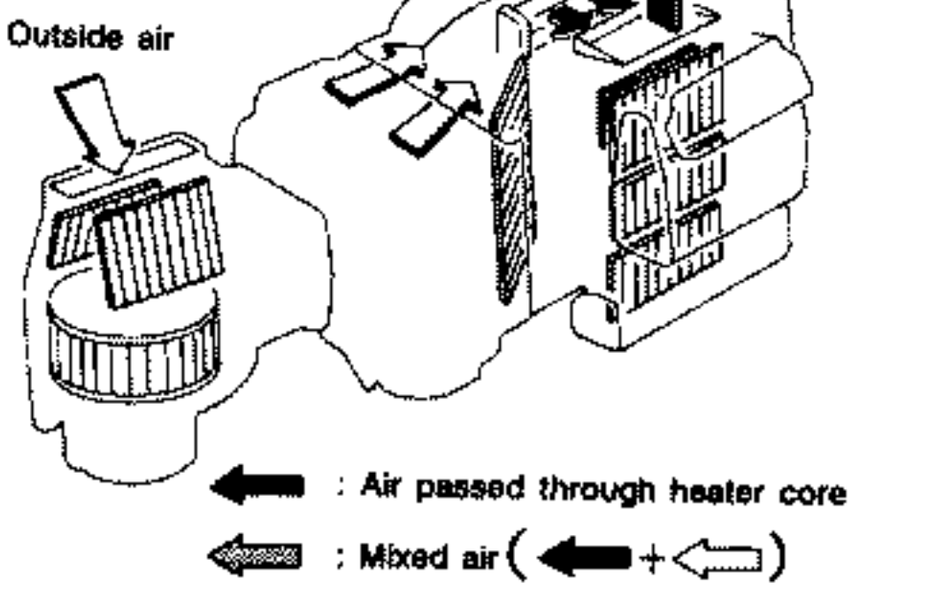

: Air passed through heater core

: Mixed air (⬅ + ⇦)

⇦ : Air not passed through heater core

SHA604C

Air Flow (Cont'd)

AIR DISTRIBUTION RATIOS

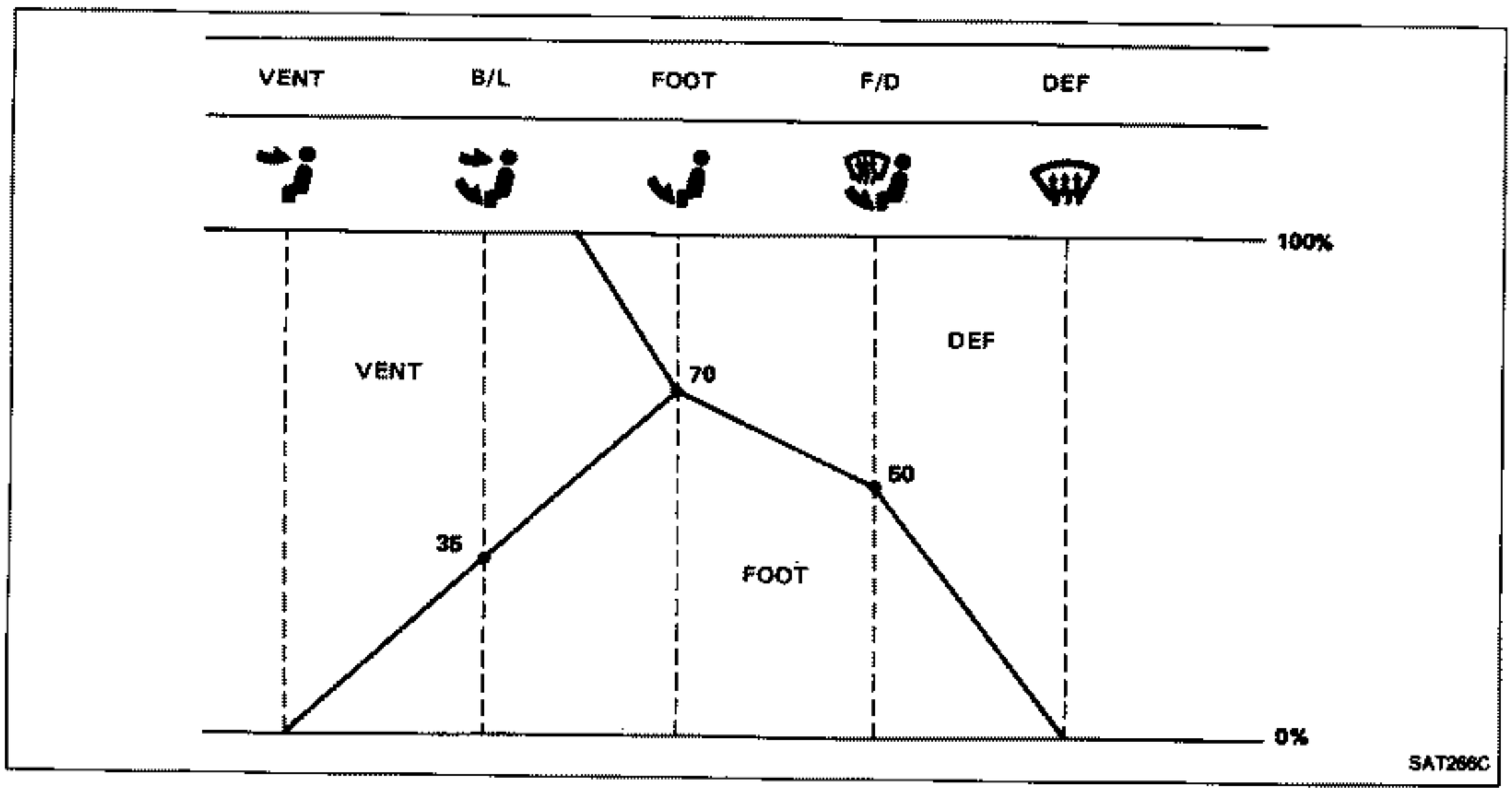

Component Layout

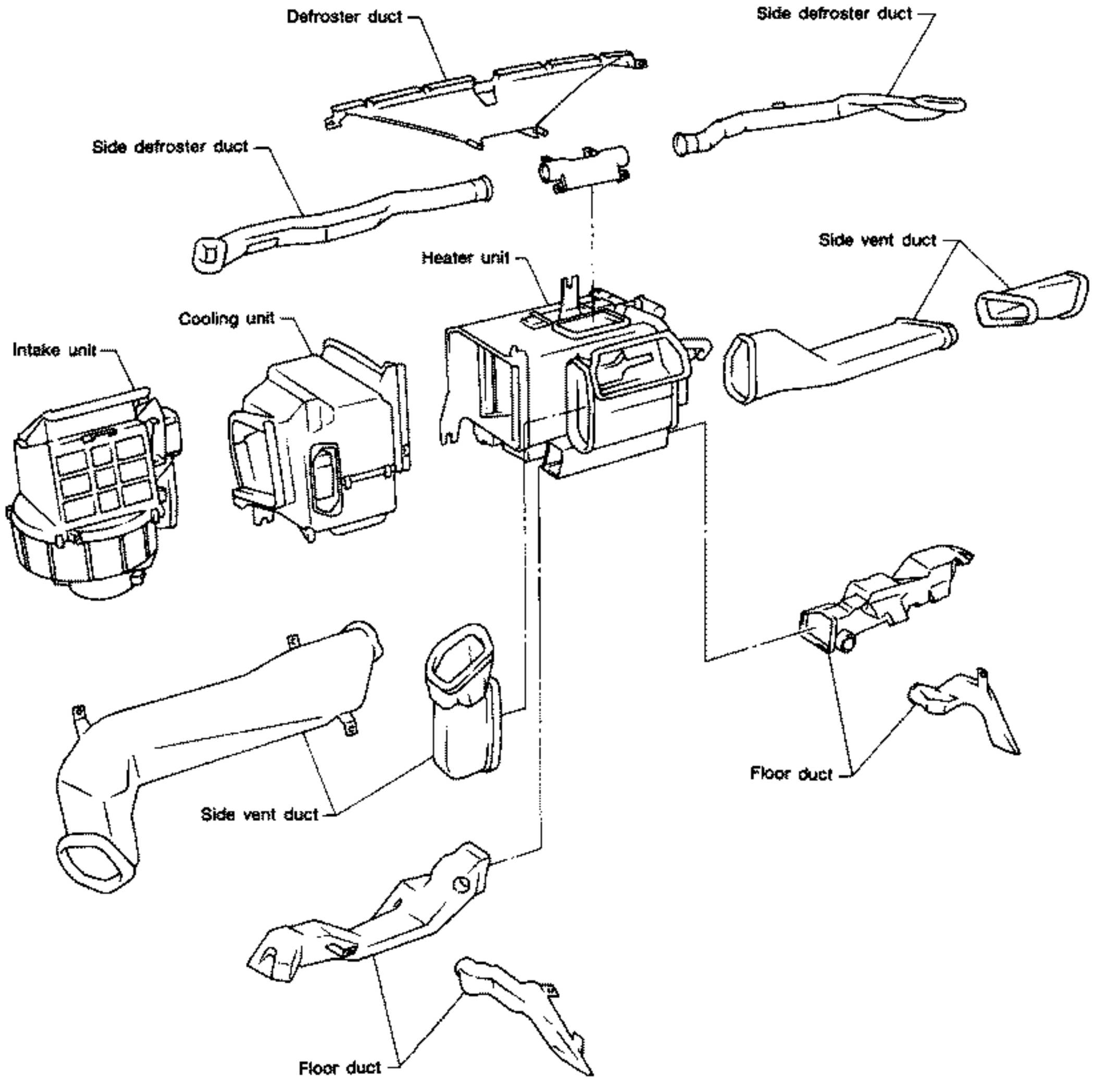

SHA605C

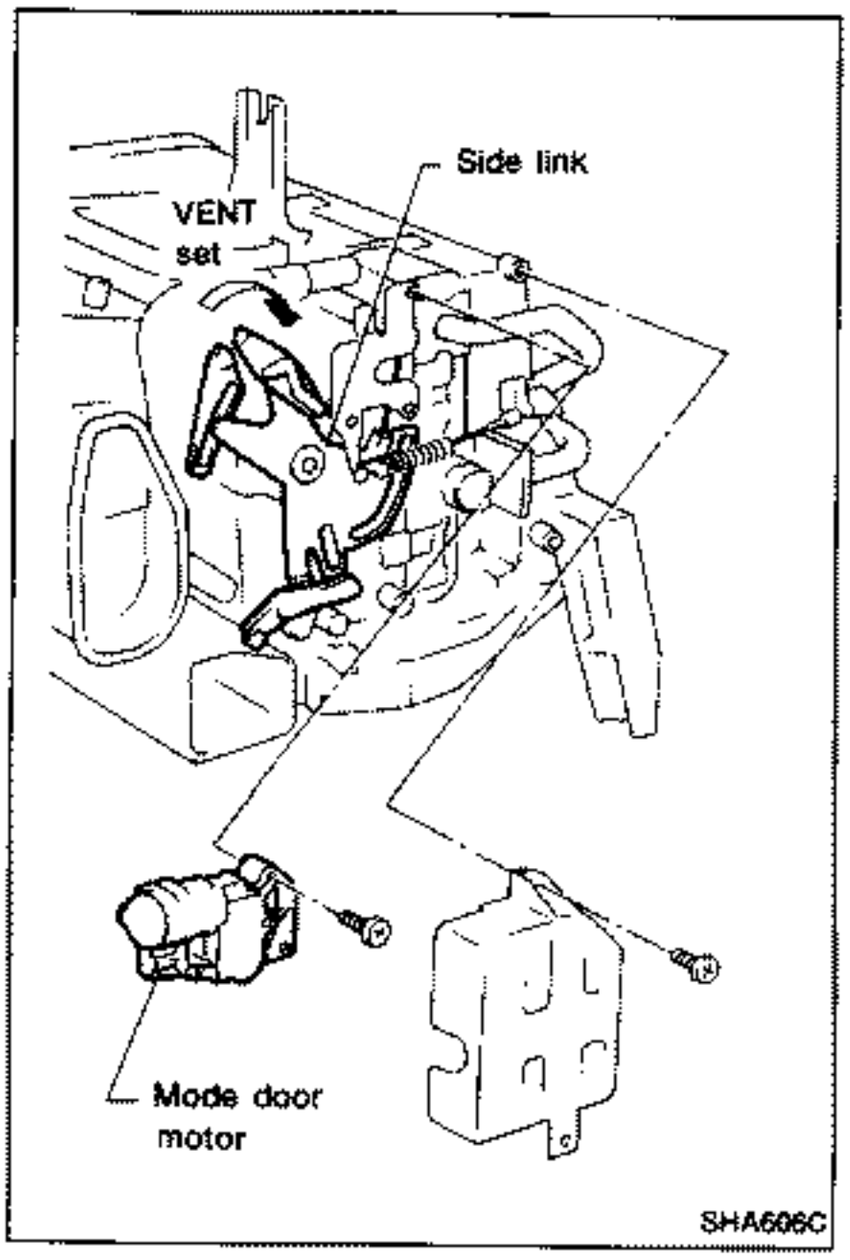

Control Rod Adjustment

MODE DOOR

1. Move side link by hand and hold mode door in VENT mode.
2. Install mode door motor on heater unit and connect it to harness.
3. Turn ignition switch to ACC.
4. Turn VENT switch ON.
5. Attach mode door rod to side link rod holder.
6. Check that when DEF position is selected, only DEF door is at full-open position, and when VENT position is selected, only VENT door is at full-open position.

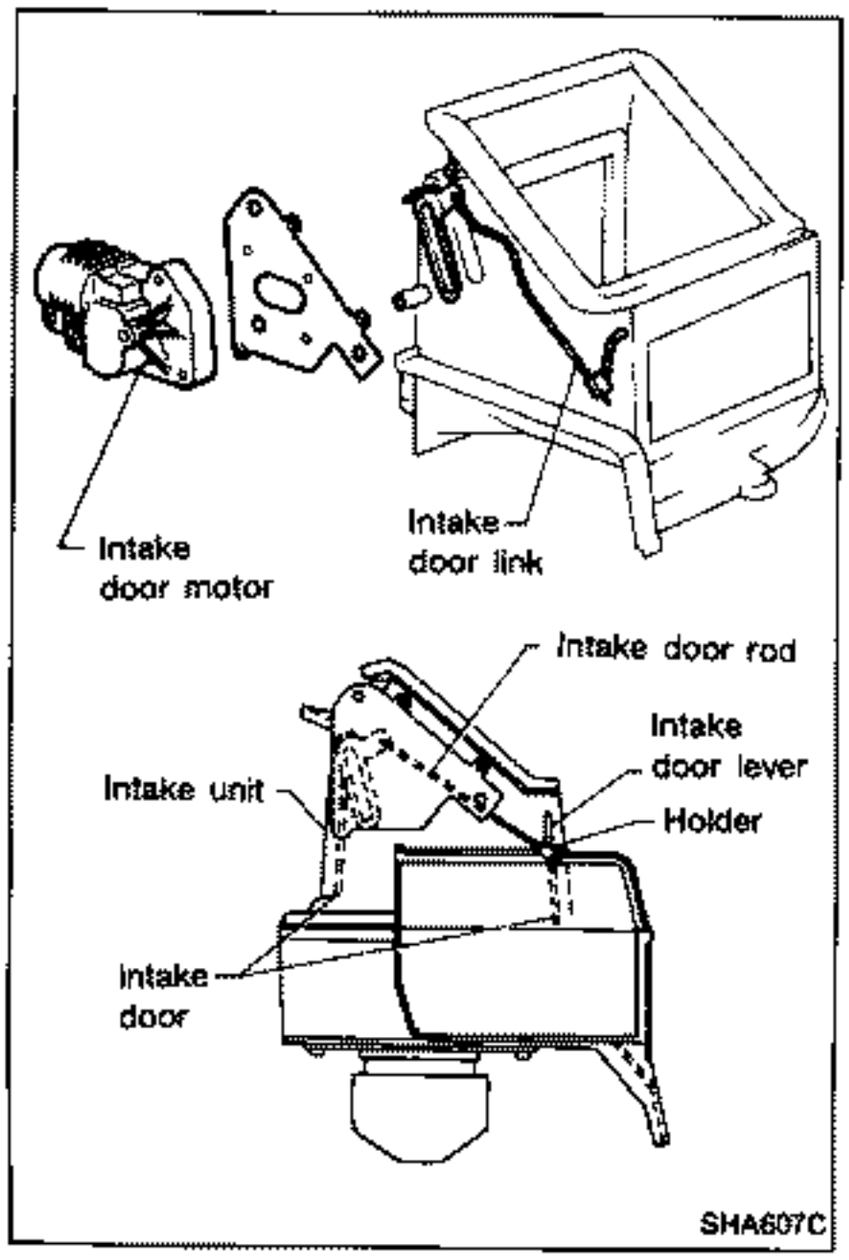

INTAKE DOOR

1. Install intake door motor on intake unit.
2. Connect intake door motor harness connector.
3. Turn ignition switch to ACC.
4. Turn REC switch ON.
5. Install intake door lever.
6. Set intake door rod in REC position and fasten intake door rod to holder on intake door lever.
7. Check that intake door operates properly when REC switch is turned ON and OFF.

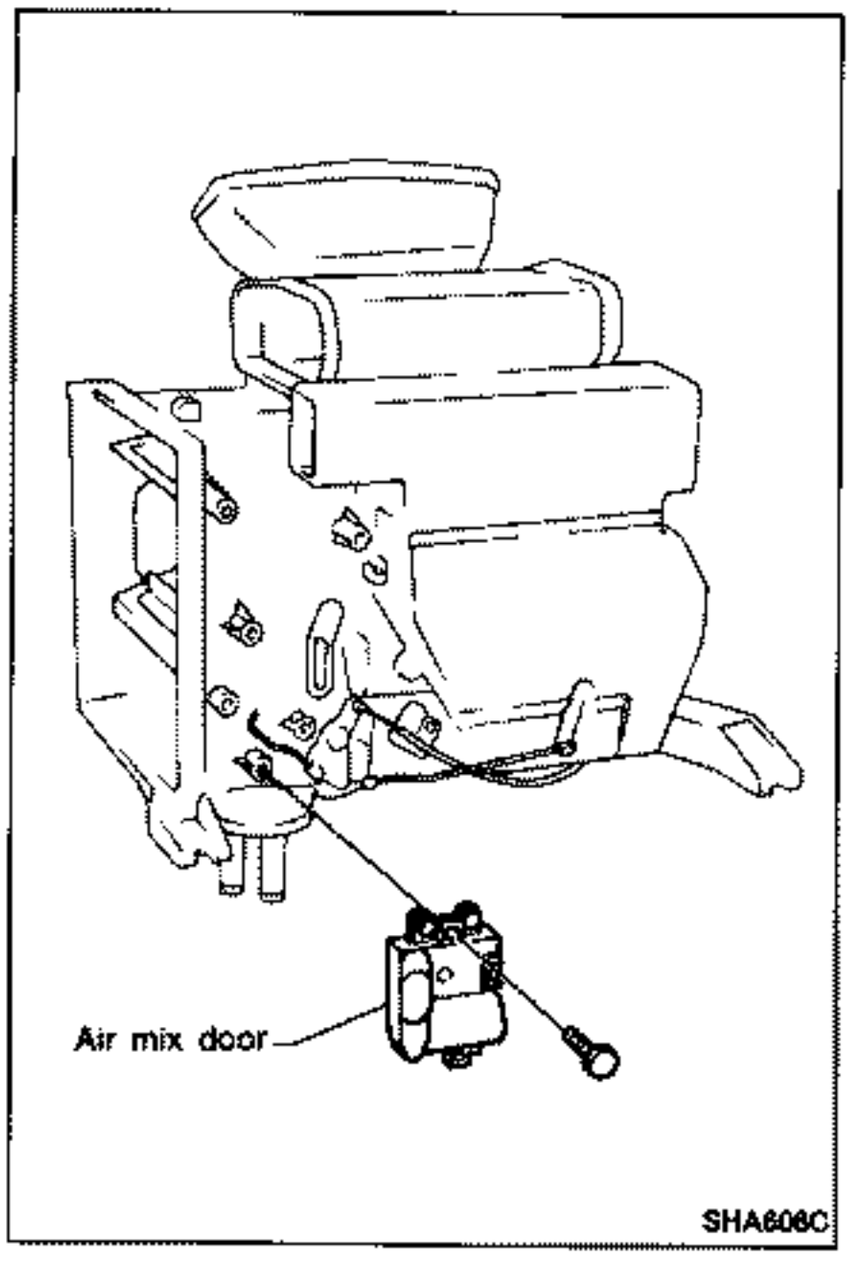

Control Rod Adjustment (Cont'd)

AIR MIX DOOR

1. Connect harness to air mix door motor and set temperature control lever at full-cold position.
2. Set air mix doors I and II at full-cold position and fasten door rod.
3. Check that when temperature control lever is at full-cold, both doors are at full-cold position, and when temperature control lever is at full-hot, both doors are at full-hot position.

WATER COCK CONTROL CABLE

Clamp cable at full-close position when air mix doors I and II are at full-cold position, and full-open position when air mix doors I and II are at full-hot position.

Wiring Diagram

R.H. DRIVE MODEL

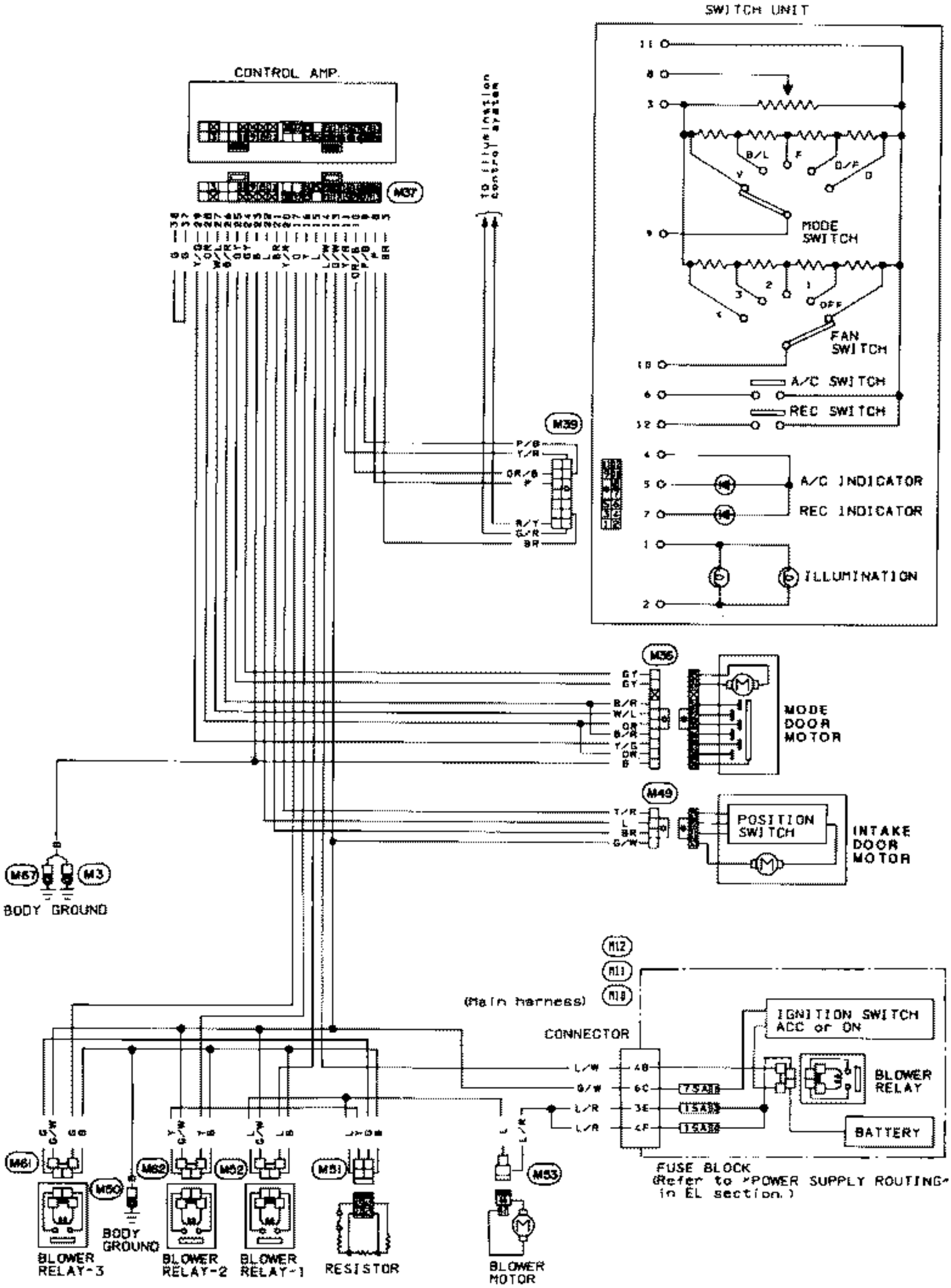

SHA690C

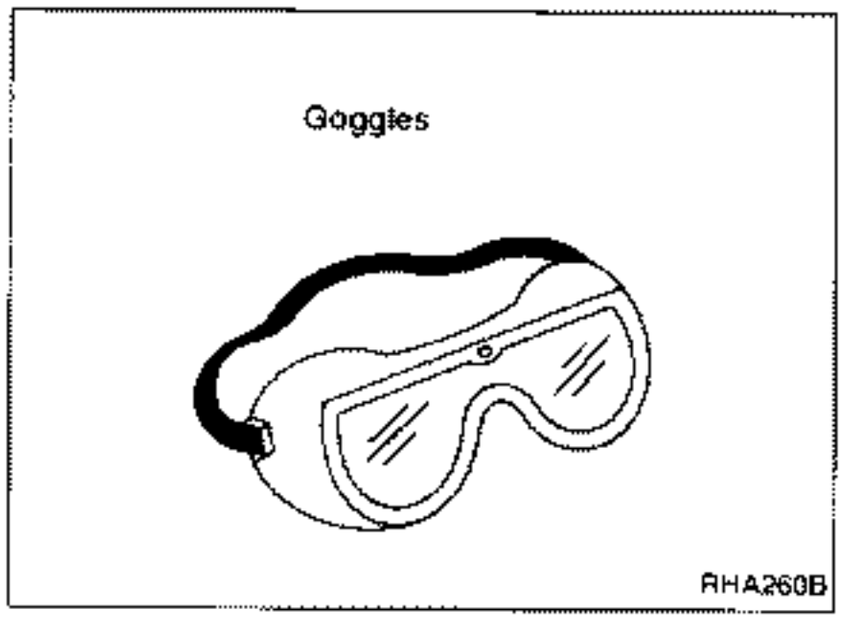

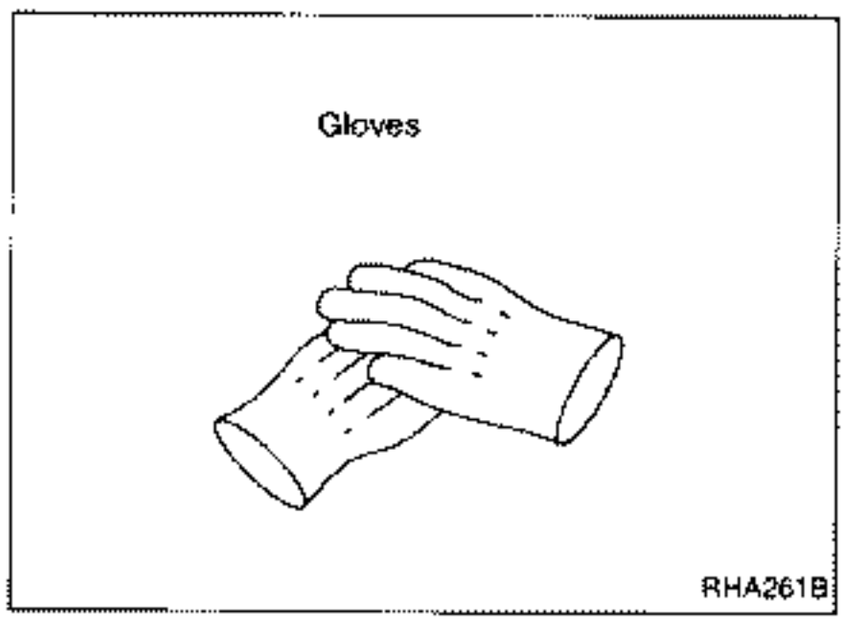

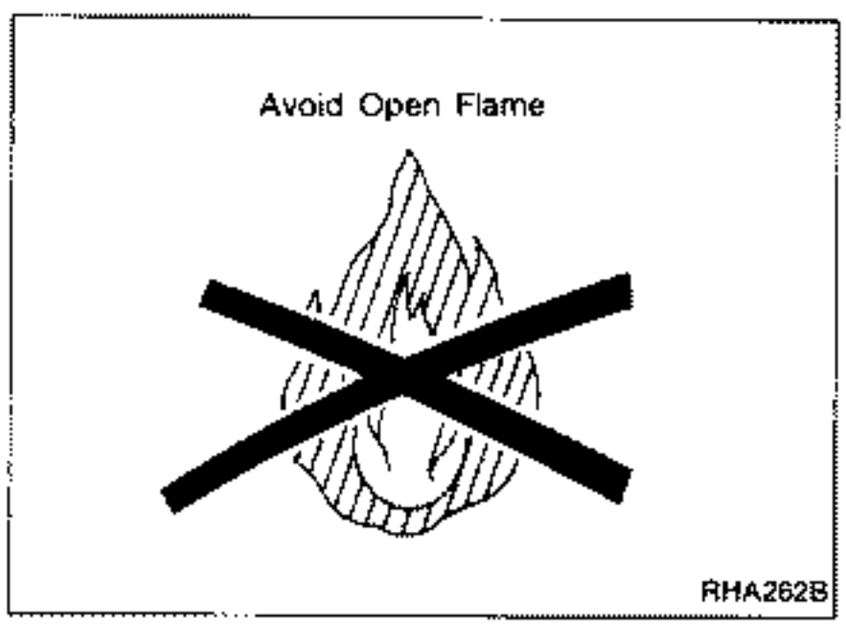

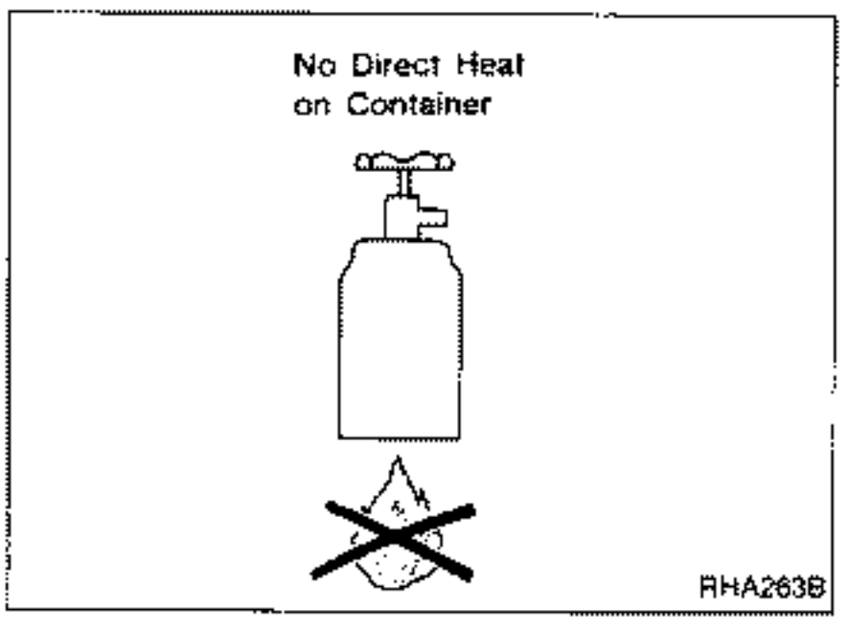

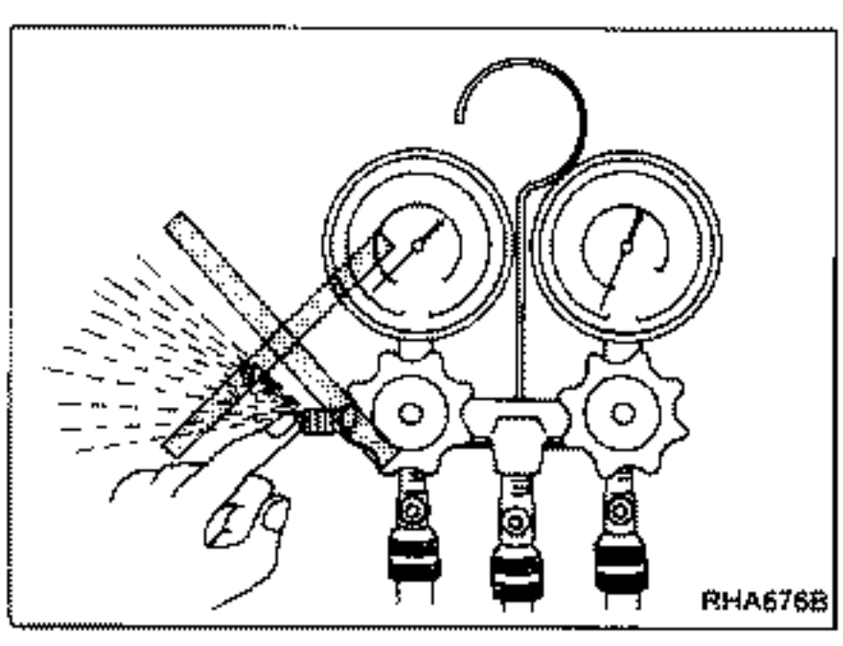

PRECAUTIONS FOR THE HANDLING OF REFRIGERANT

- **Always wear eye protection when working around the system.**
- **Always be careful that refrigerant does not come in contact with your skin.**
- **Keep refrigerant containers stored below 40°C (104°F) and never drop from high places.**
- **Work in well-ventilated area because refrigerant gas evaporates quickly and breathing may become difficult due to the lack of oxygen.**
- **Keep refrigerant away from open flames because poisonous gas will be produced if it burns.**
- **Do not increase can temperature beyond 40°C (104°F) in charging.**
- **Do not heat refrigerant container with an open flame. There is a danger that container will explode.**

CAUTION:

- **Do not use steam to clean surface of condenser or evaporator. Be sure to use cold water or compressed air.**
- **Compressed air must never be used to clean a dirty line.**
- **Do not release refrigerant into the atmosphere.**

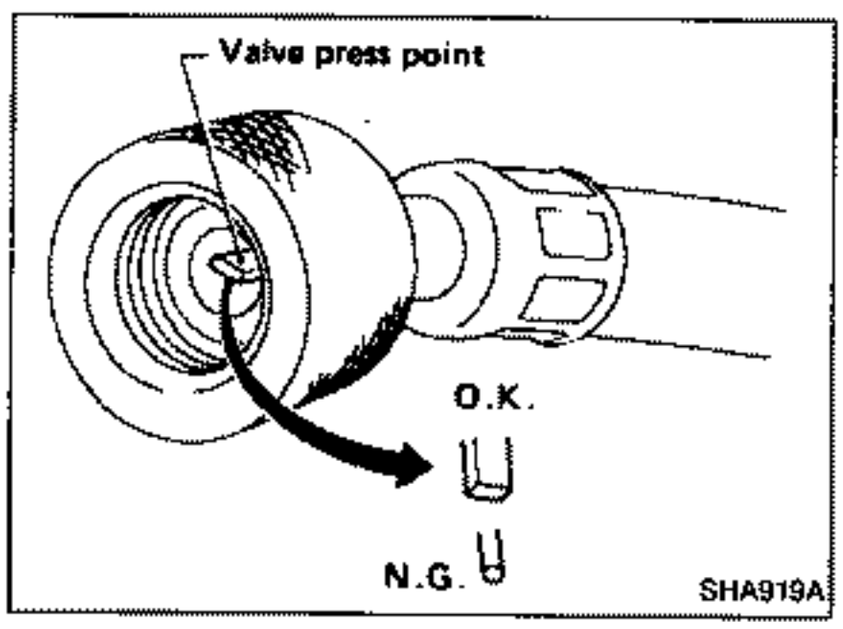

- **Do not use manifold gauge whose press point shape is different from that shown. Otherwise, insufficient evacuating may occur.**
- **Do not over-tighten service valve cap.**
- **Do not allow refrigerant to rush out. Otherwise, compressor oil will be discharged along with refrigerant.**

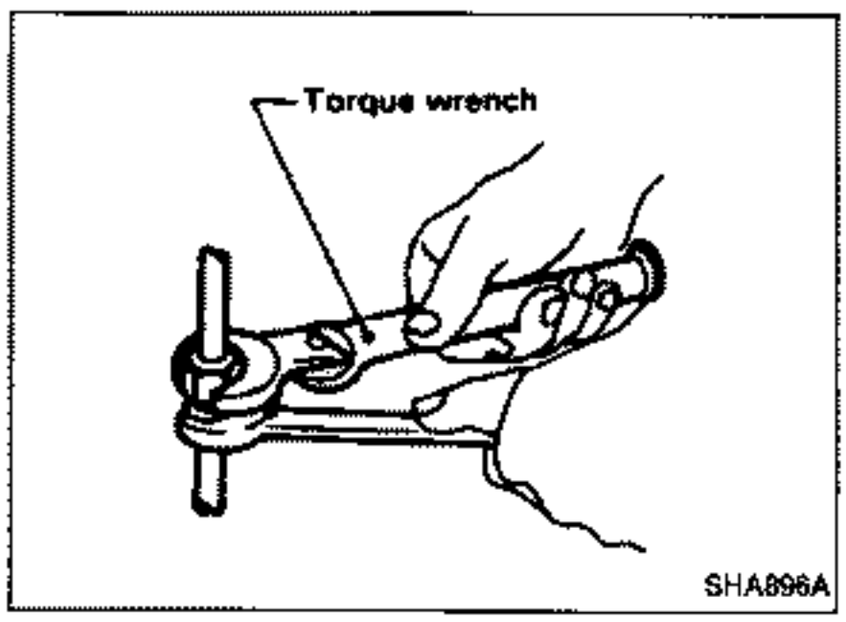

WARNING:
Gradually loosen discharge side hose fitting, and remove it after remaining pressure has been released.
CAUTION:
When replacing or cleaning refrigerant cycle components, observe the following.

- **Do not leave compressor on its side or upside down for more than 10 minutes, as compressor oil will enter low pressure chamber.**
- **When connecting tubes, always use a torque wrench.**

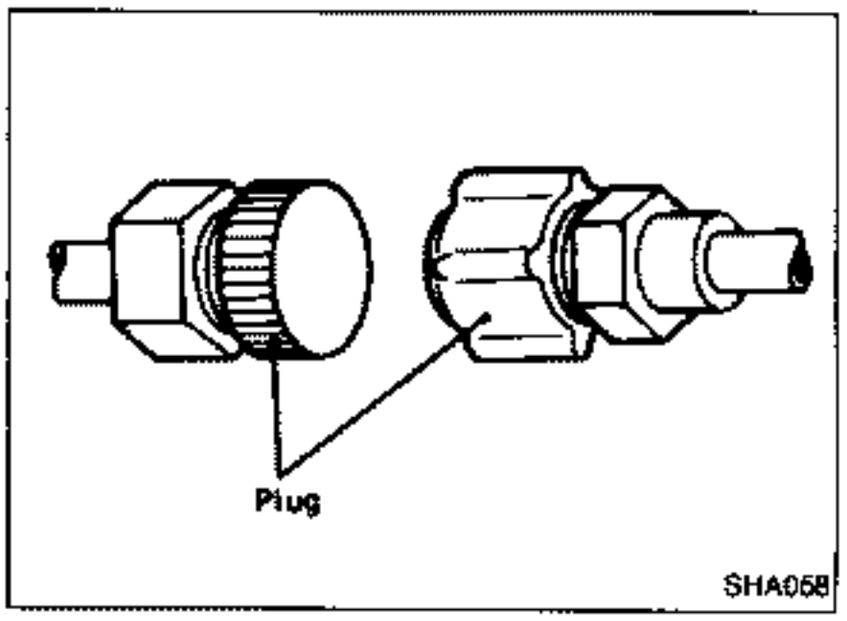

- **After disconnecting tubes, plug all openings immediately to prevent entrance of dirt and moisture.**

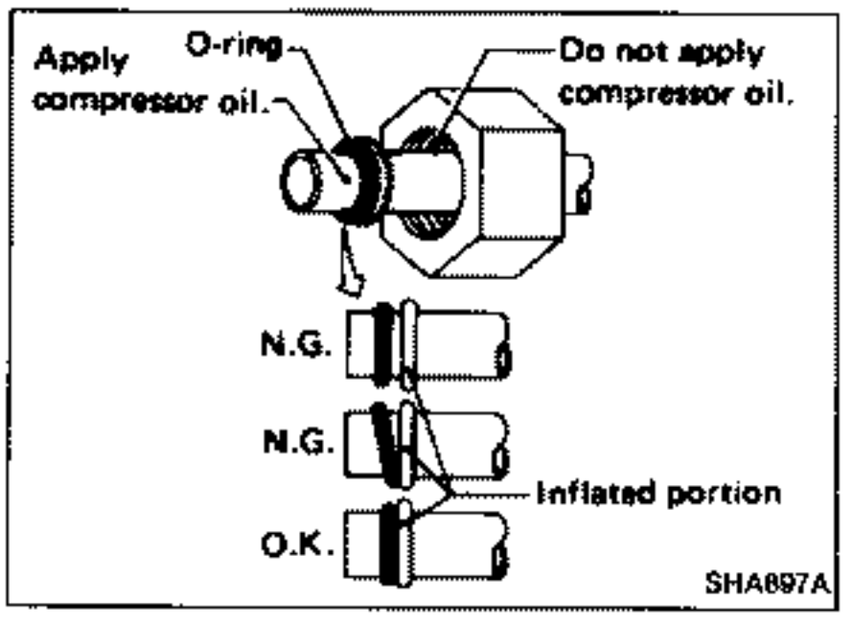

- **Always replace used O-rings.**
- **When connecting tube, apply compressor oil to portion shown in illustration. Be careful not to apply oil to threaded portion.**
- **O-ring must be closely attached to inflated portion of tube.**

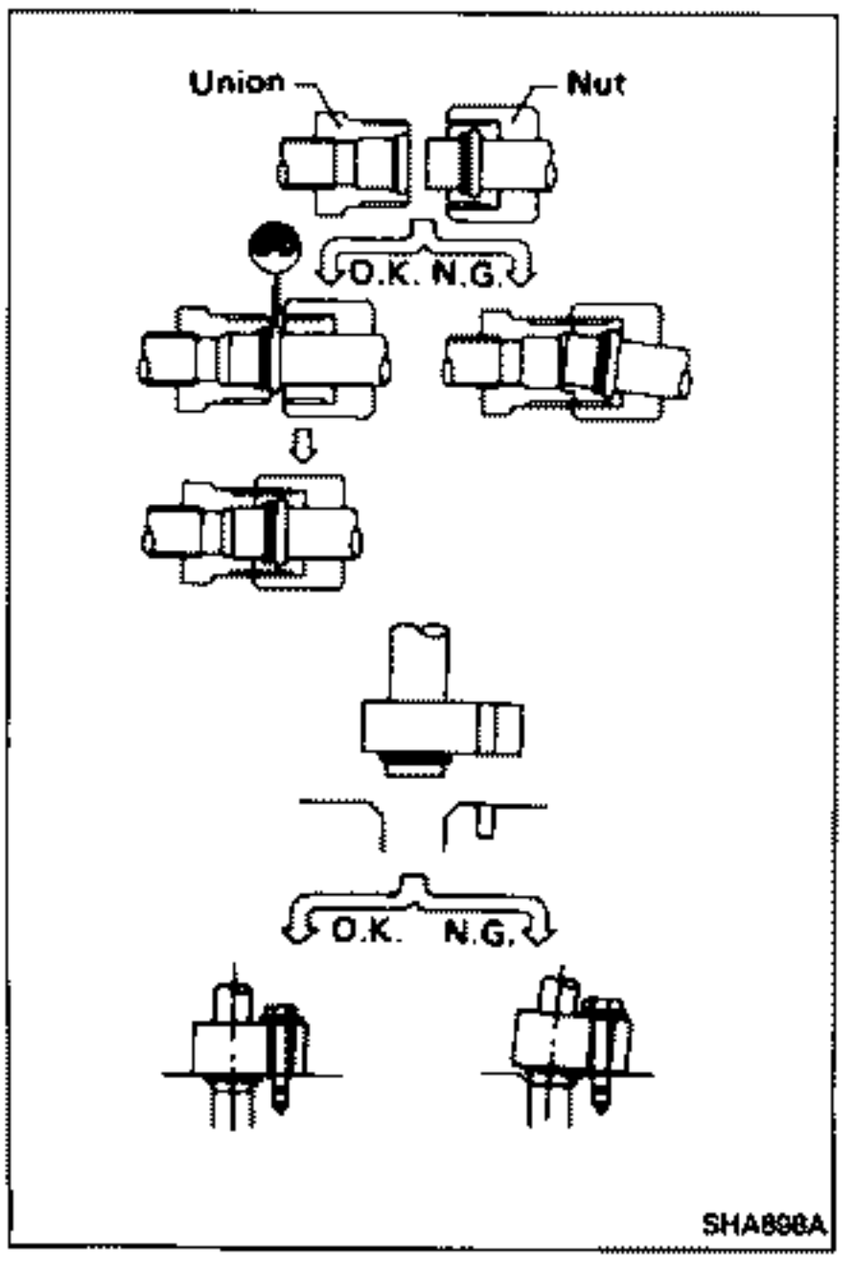

- **After inserting tube into union until O-ring is no longer visible, tighten nut to specified torque.**
- **After connecting line, conduct leak test and make sure that there is no leakage from connections. If a gas leaking point is found, disconnect that line and replace the O-ring. Then tighten connections of seal seat to the specified torque.**

SPECIAL SERVICE TOOLS

MJS170 model

*: Special tool or commercial equivalent

Tool name Tool number	Description	
Clutch disc wrench KV99412302*		Removing shaft nut and clutch disc
Clutch disc puller KV994C5780		Removing clutch disc
Shaft handle socket KV99412329*	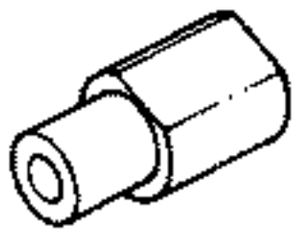	Rotating compressor shaft
Shaft seal remover KV99403043	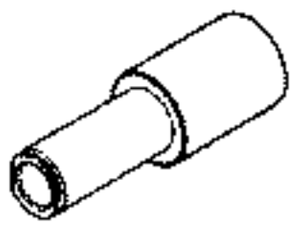	Removing and installing shaft seal
Shaft seal installer KV99403042	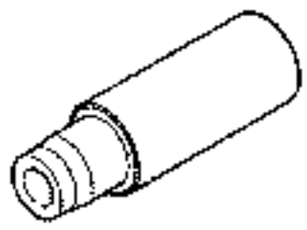	
Shaft seal pilot KV99403041*		Installing shaft seal
Allen socket KV99412330*		Removing rear cover
Cylinder head remover KV994C5785*		Removing rear cylinder head

Tool name Tool number	Description	
Oil separator kit KV994A9690		Separating oil from refrigerant
KV992C5079 Adapter connector A ① KV992C5081 Adapter connector B ② KV992C5082	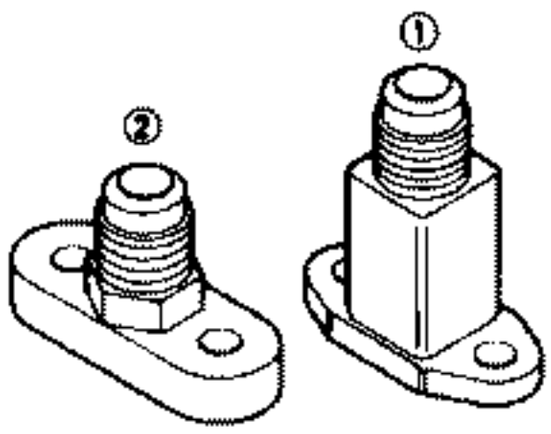	Using separate oil
Charge nozzle KV994C1552		Charging refrigerant into compressor
Blind cover set KV994C4548 Blind cover ① KV994C4531 Gasket ② KV994C4532 Gasket (Useless) ③ KV994C4533 Gasket (Useless) ④ KV994C4534 Bolt ⑤ KV994C4559	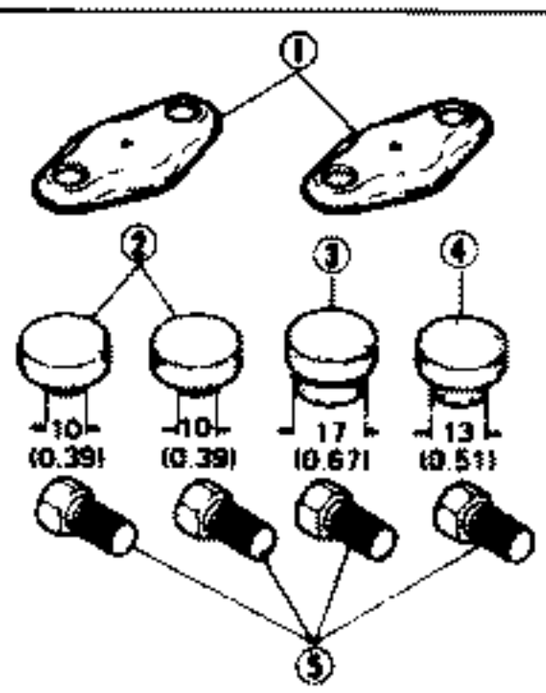 Unit: mm (in)	Blind cover

Service Tools

RECOMMENDED TOOLS

Tool name	Description	
Manifold gauge (3-valve type)	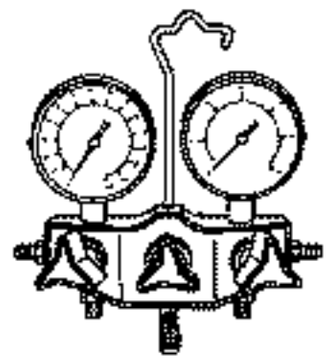 RHA570B	Discharging, evacuating and charging refrigerant
Charging hose (Four)	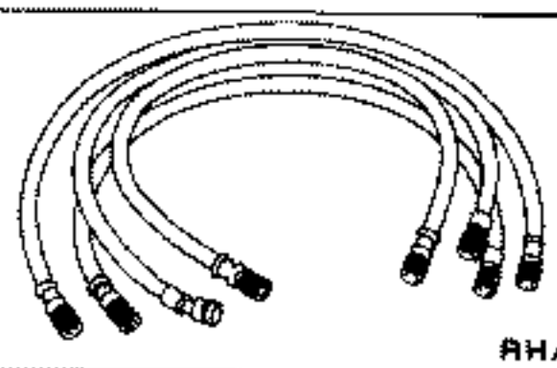 RHA571B	Discharging, evacuating and checking refrigerant
Charge valve	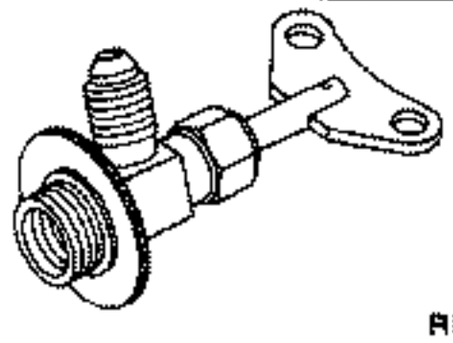 RHA572B	Discharging and charging refrigerant
Adapter valve	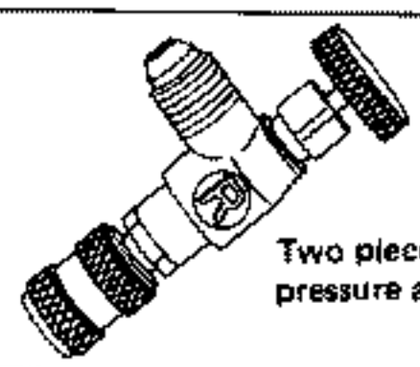 Two pieces on each high pressure and low pressure line RHA573B	Evacuating and charging
Thermometer	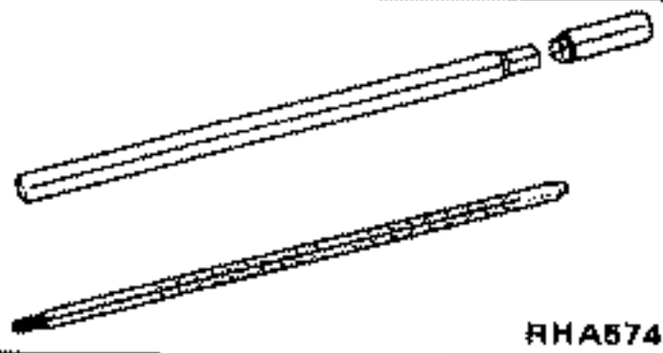 RHA574B	Checking temperature
Vacuum pump	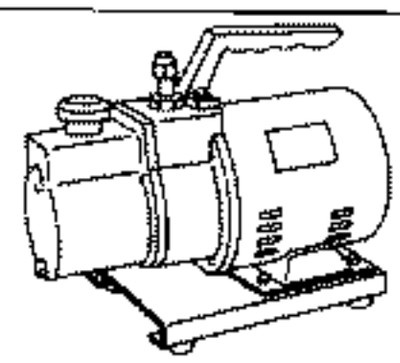 RHA575B	Evacuating refrigerant
Joint adapter (T-type)	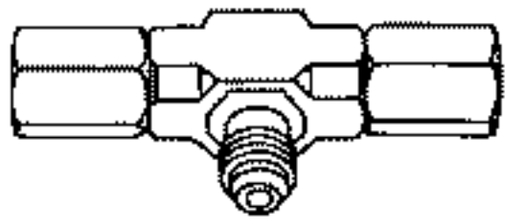 RHA576B	Charging refrigerant

Service Tools (Cont'd)

Tool name	Description	
Gas leak detector	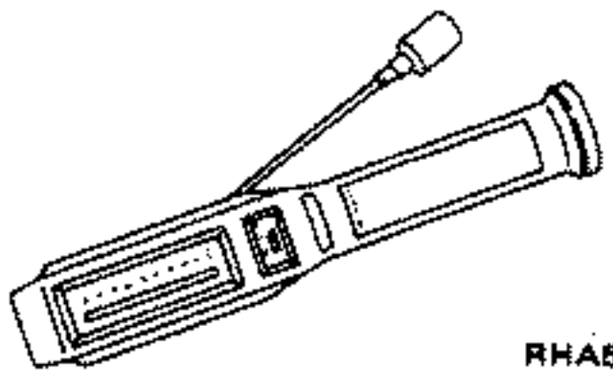 RHA577B	Charging refrigerant leaks
Charging cylinder	 RHA578B	Checking amount of refrigerant and charging refrigerant
Weight scale	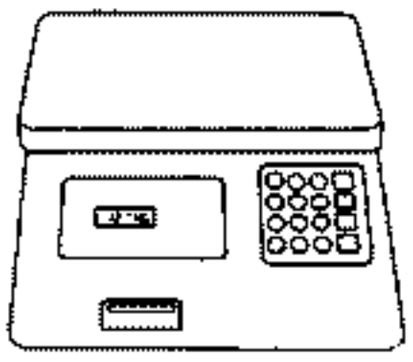 RHA579B	Checking amount of refrigerant

For details of such handling methods, refer to the instruction Manual attached to each of the service tools.

Service Tools (Cont'd)

HANDLING METHOD AND STRUCTURE

Manifold gauge

The manifold gauge is used to measure the operating pressure accurately in the high pressure and low pressure lines of the refrigerating system.
The high pressure gauge measures from –101.3 kPa (–1,013 mbar, –760 mmHg, –29.92 inHg) to 2,942 kPa (29.4 bar, 30 kg/cm^2, 427 psi), and the low pressure gauge measures generally from –101.3 kPa (–1,013 mbar, –760 mmHg, –29.92 inHg) to 1,471 kPa (14.7 bar, 15 kg/cm^2, 213 psi).

CAUTION:

- **When installing the gauge to the refrigerating system, use utmost care not to mistake high pressure and low pressure line connections. (Wrong connections will lead to a damaged gauge.)**
- **Before evacuating, confirm that the gauge has a negative pressure scale. (If not, the gauge will be damaged.)**

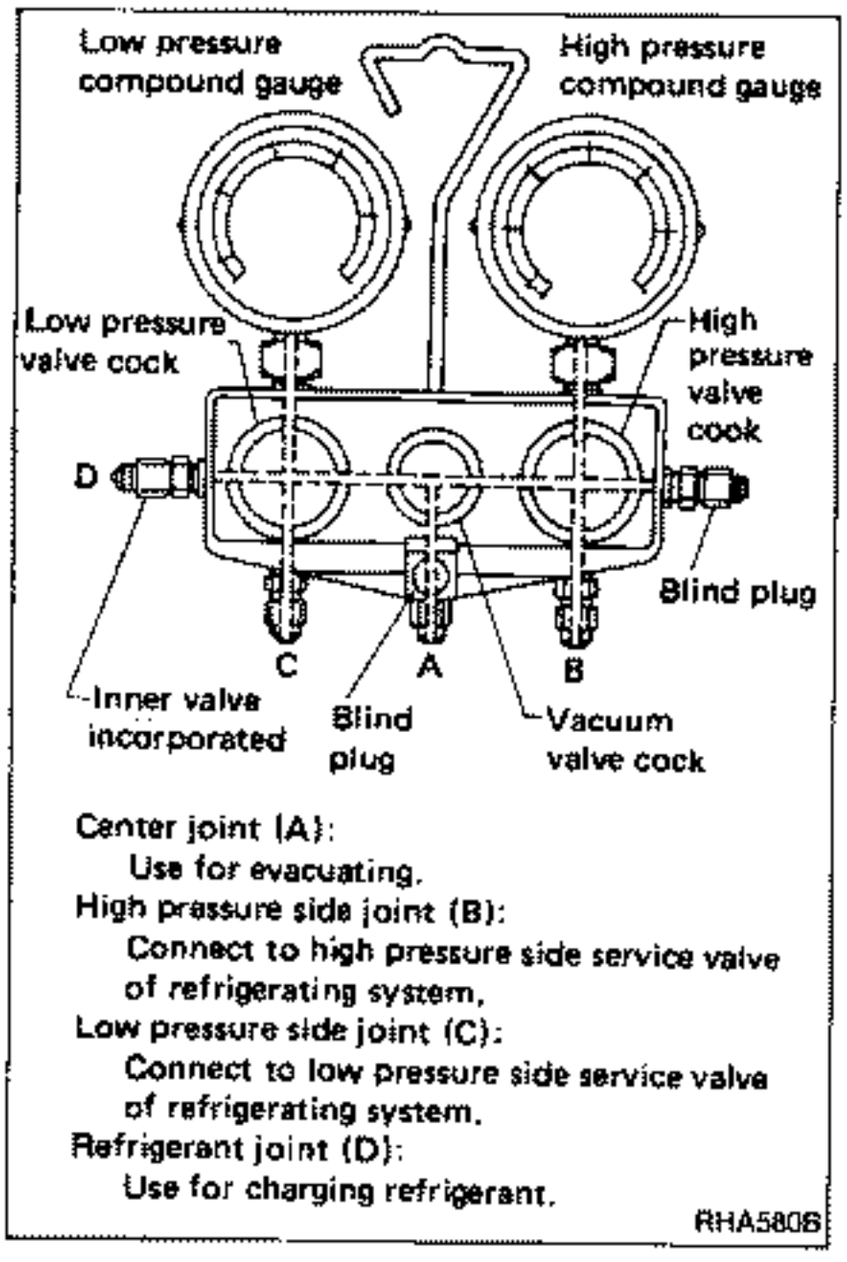

Center joint (A):
Use for evacuating.
High pressure side joint (B):
Connect to high pressure side service valve of refrigerating system.
Low pressure side joint (C):
Connect to low pressure side service valve of refrigerating system.
Refrigerant joint (D):
Use for charging refrigerant.

RHA580G

Charging hose

1. Completely tighten the high pressure valve, low pressure valve and vacuum pump valve cocks of the gauge manifold.
2. Connect the charging hoses to the high and low pressure lines.
3. Connect the charging hose fitted with a valve core to the refrigerant canister.
4. Connect the charging hose to the vacuum pump.

The high and low pressure hoses are color coded to prevent wrong connection.

High pressure line hose	Red
Low pressure line hose	Yellow
Refrigerant canister hose	Blue or green (with valve core)
Vacuum pump hose	Blue or green

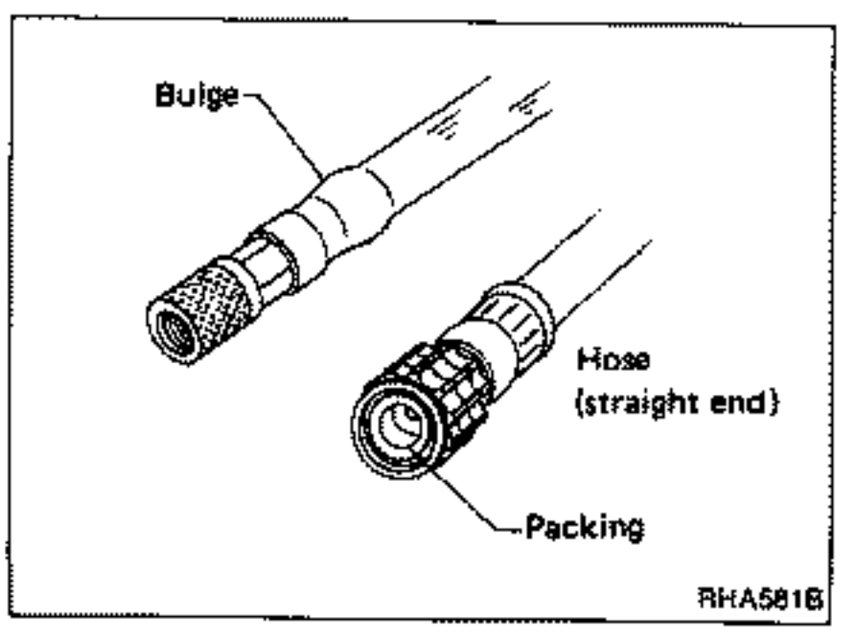

RHA581G

CAUTION:

- **Check each hose for cracks. If found, discard the hose.**
- **Do not use any hose if bulges are found.**
- **Check the rubber packing. If any deterioration or cracks are found, replace it with a new one.**

Service Tools (Cont'd)

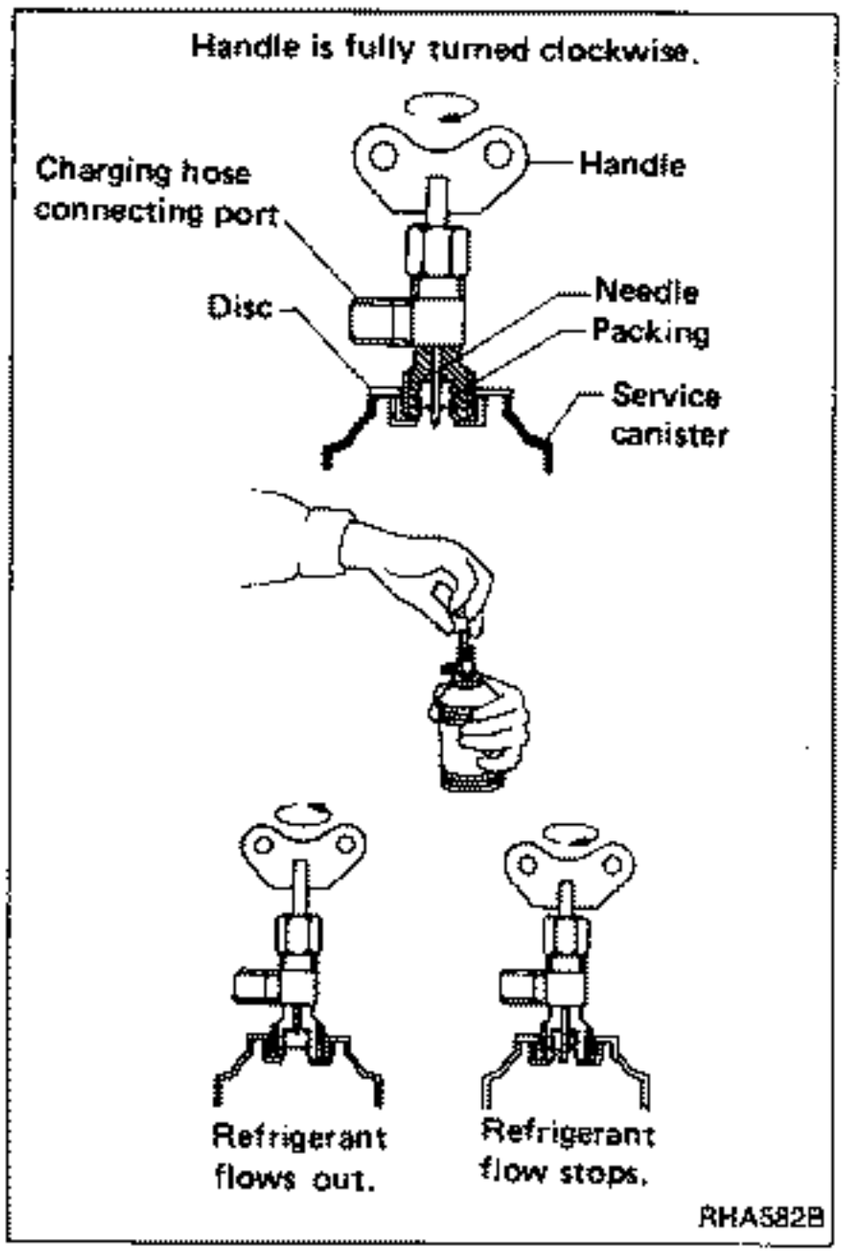

Charge valve

The charge valve is used to charge the refrigerant into the system from the service canister through the gauge manifold. Attach this valve to the head of a service canister by screwing it on. Then turn the handle clockwise to pierce the canister to allow the refrigerant to flow into the refrigerating system.

CAUTION:

Check the packing for any sign of deterioration or cracks. If any abnormalities are found, replace it with a new one.

1. Turn the charge valve handle counterclockwise to fully retract the needle, and then attach the charge valve to the service canister. Note that leakage will occur if the charge valve is attached to the canister without retracting the needle.
2. Securely fit the charge valve to the head of the service canister by turning it. Then turn the handle slowly clockwise to make a hole in the canister with the needle.
3. Turn the handle counterclockwise to retract the needle, and the refrigerant will flow into the gauge manifold through the hole. To stop the flow of the refrigerant, turn the handle clockwise to close the hole with the needle.

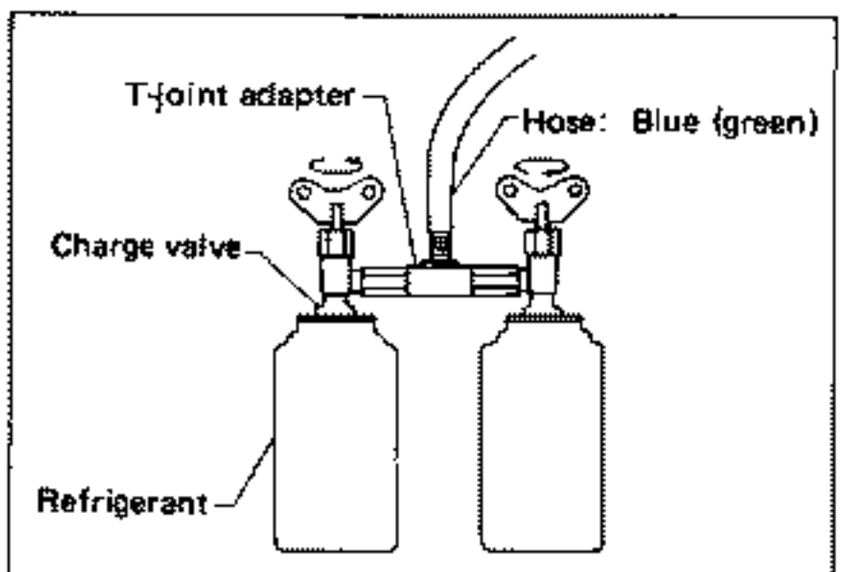

Connecting T-joint adapter

The T-joint adapter is used to connect two refrigerant canisters so that air purging and the accompanying discharge of refrigerant into the atmosphere can be eliminated when recharging the refrigerant. If only one service canister is sufficient to charge the refrigeration system, do not use this T-joint adapter.

1. Turn the handle of each charge valve fully counterclockwise, and attach the valve to a refrigerant canister.
2. Connect the T-joint adapter to both charge valves so that two refrigerant canisters are connected as shown.
3. Connect the charging hose with valve core to the T-joint adapter. Connect the valve core end of the charging hose to the manifold gauge.

If more than three service canisters are needed for charging, use a cross joint adapter to connect four service canisters.

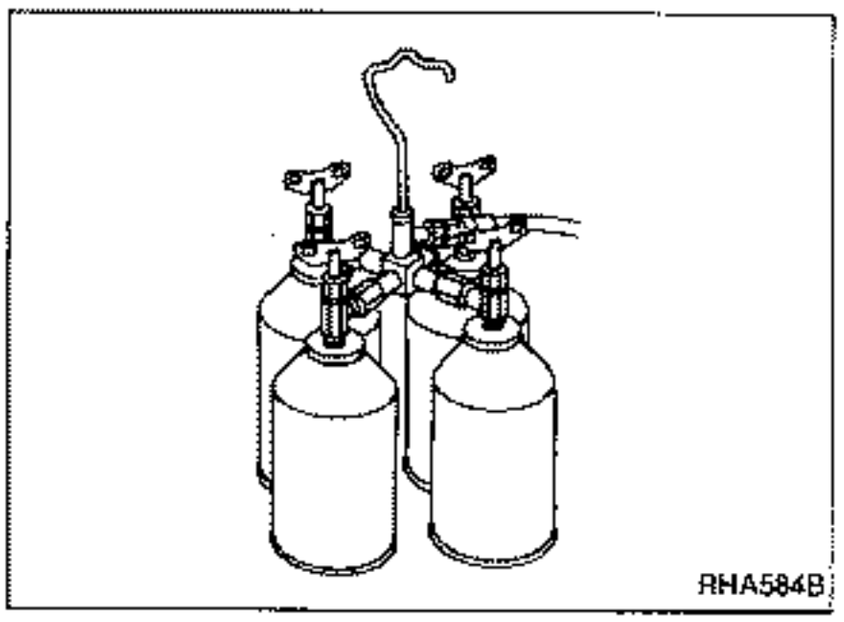

Service Tools (Cont'd)

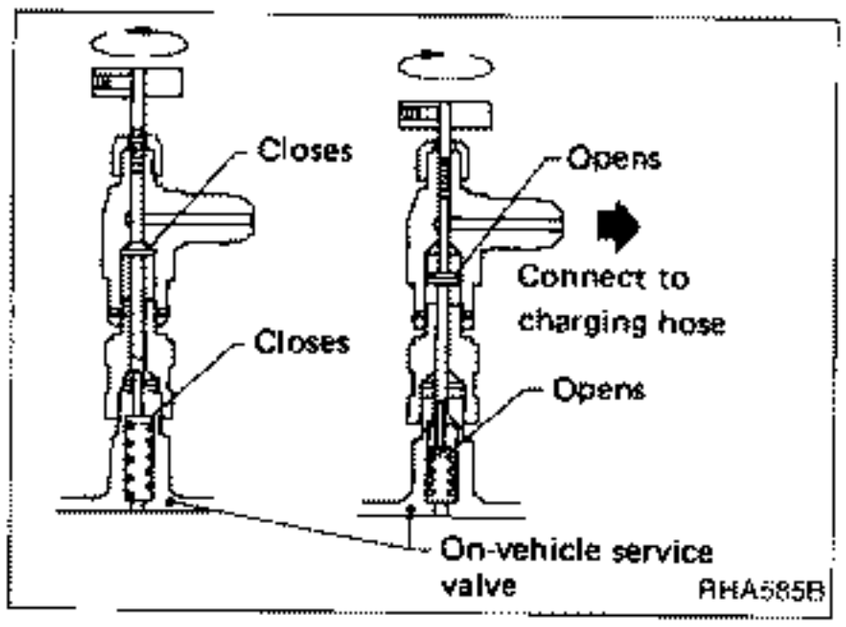

Installing the adapter valve

Install the adapter valve to each of the high pressure and low pressure service valves so that air purging from the charging hose can be omitted. This also ensures that refrigerant leakage upon disconnection of the hose can be prevented.

1. Before connecting the adapter valve to the on-vehicle service valve, turn the adapter valve handle fully counterclockwise to retract the pin.

CAUTION:

Check the packing for any sign of deterioration or cracks. If any abnormality is found, replace the packing with new.

2. Connect the charging hose to the adapter valve.

Turning the handle clockwise will cause the on-vehicle service valve pin to be pushed open by the adapter valve pin, thus opening the refrigerant passage.
Turning the handle counterclockwise will close the passage.
Before removing the adapter valve from the on-vehicle service valve, be sure to fully turn the handle counterclockwise to shut off the refrigerant passage.

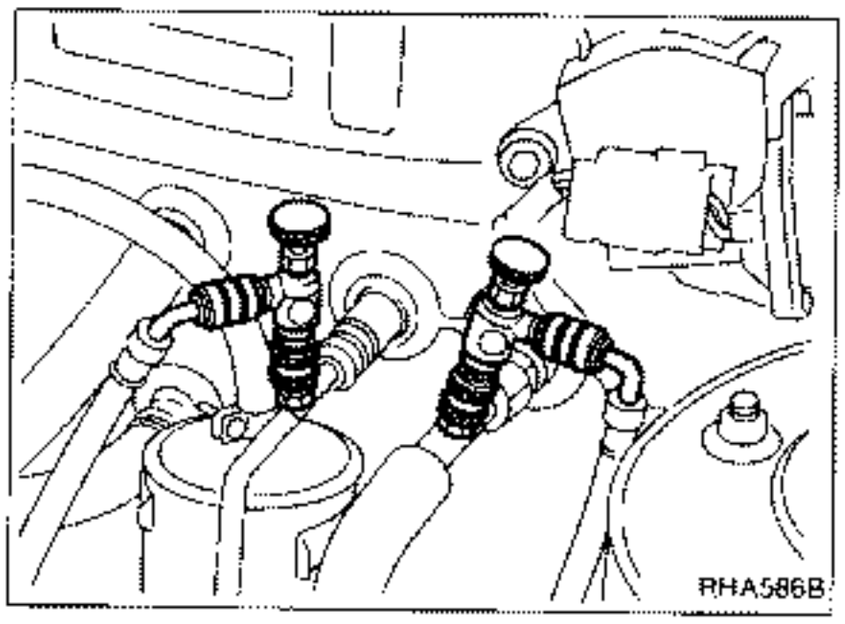

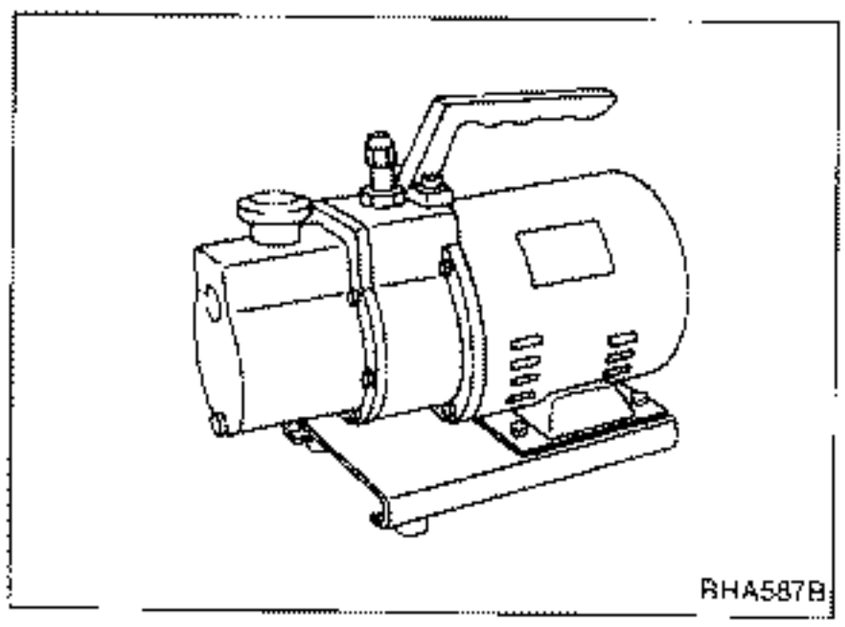

Vacuum pump

The vacuum pump is used to purge air and moisture from the inside of the refrigeration system by evacuation, thereby ensuring proper functioning of the air conditioner system.

Check the vacuum pump to see that the vacuum pump capacity is greater than –100.0 kPa (–1,000 mbar, –750 mmHg, –29.53 inHg).

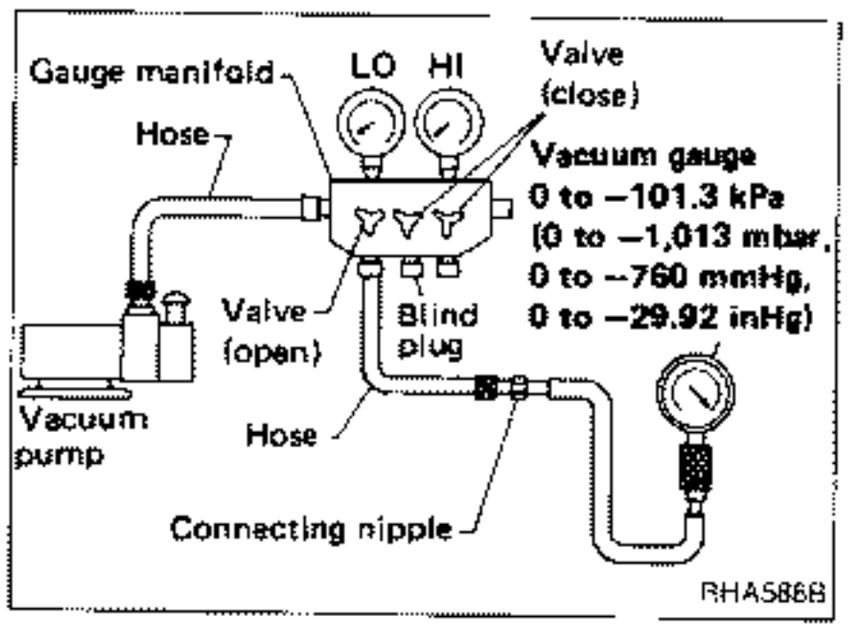

Vacuum pump performance check procedure

1. Connect the vacuum gauge to the system.
2. Run the vacuum pump, and check to see that the needle pointers of the gauge manifold and vacuum gauge move smoothly, indicating a similar value.
3. After running the vacuum pump for two or three minutes, read the vacuum gauge. The measured value indicates the vacuum pump capacity.

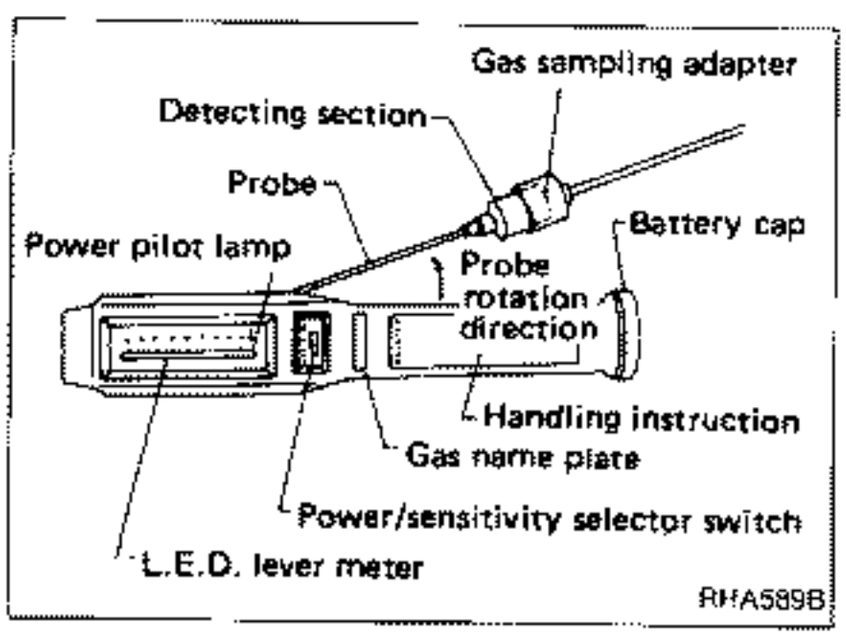

Gas leak detector

The gas leak detector is used to check whether the refrigeration system is leaking. The detector is available in two types; halide torch or electrical. The features of these gas leak detectors are listed on the next page.

Service Tools (Cont'd)

Type		Detection ability	Features
Halide torch		200 g (7.05 oz)/year (thin green)	• Low price • Low sensitivity • Less safe because of the use of flame for detection
Electrical	Discharge type (Suction type)	3 - 50 g (0.11 - 1.76 oz)/year	• Easy handling • Medium sensitivity • Each point needs two or more seconds for detection.
	Positive ion emission type (Suction type)	2 g (0.07 oz)/year	• High sensitivity • High price • Warm-up time is needed because a heater is incorporated.
Other simple checking method: Change in vacuum when evacuating		1 kg (2 lb)/month; if 13.3 kPa (133 mbar, 100 mmHg, 3.94 inHg) change in vacuum is detected in 10 minutes.	• Can be used easily in refrigerant charging operation. • Detection ability is very low with vacuum gauge in gauge manifold.

- **Leakage inspection of a refrigeration system needs a sensitivity greater than 20 g (0.71 oz)/year.**
- **The actual amount of leak is estimated at 5 to 10 times the detected amount.**
- **Insufficient cooling may be felt if leakage exceeds 150 to 200 g (5.29 to 7.05 oz).**

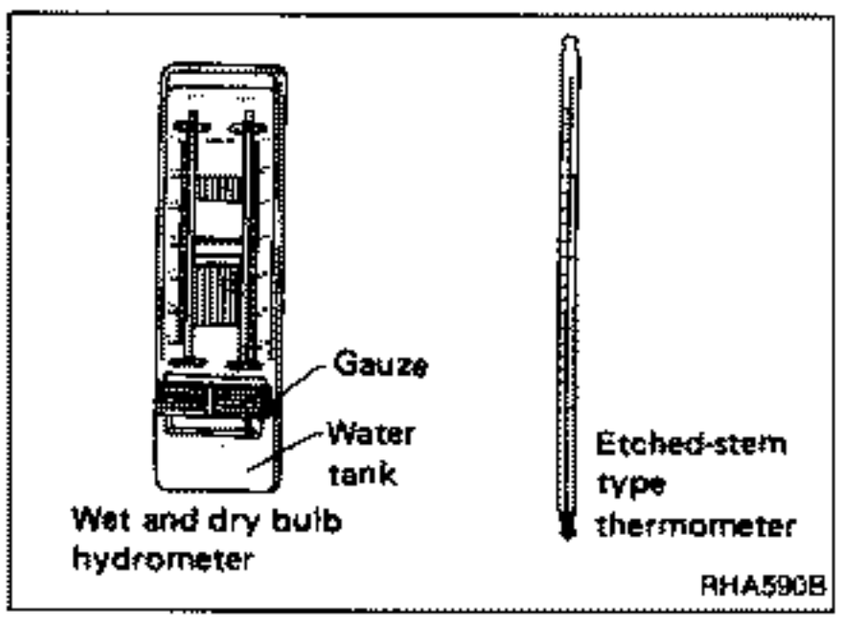

Temperature gauge

Use to check the air conditioner performance. An etched stem type thermometer may be used. A hygrometer must also be used because the air conditioner performance depends on the humidity.

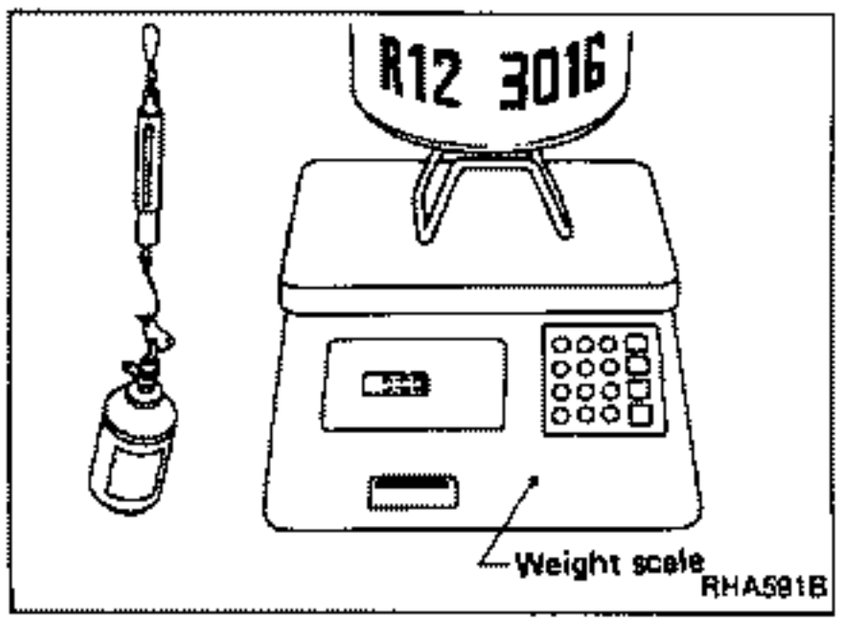

Scale

Measure the weight of the refrigerant to determine how much the refrigerant is charged.

Service Tools (Cont'd)

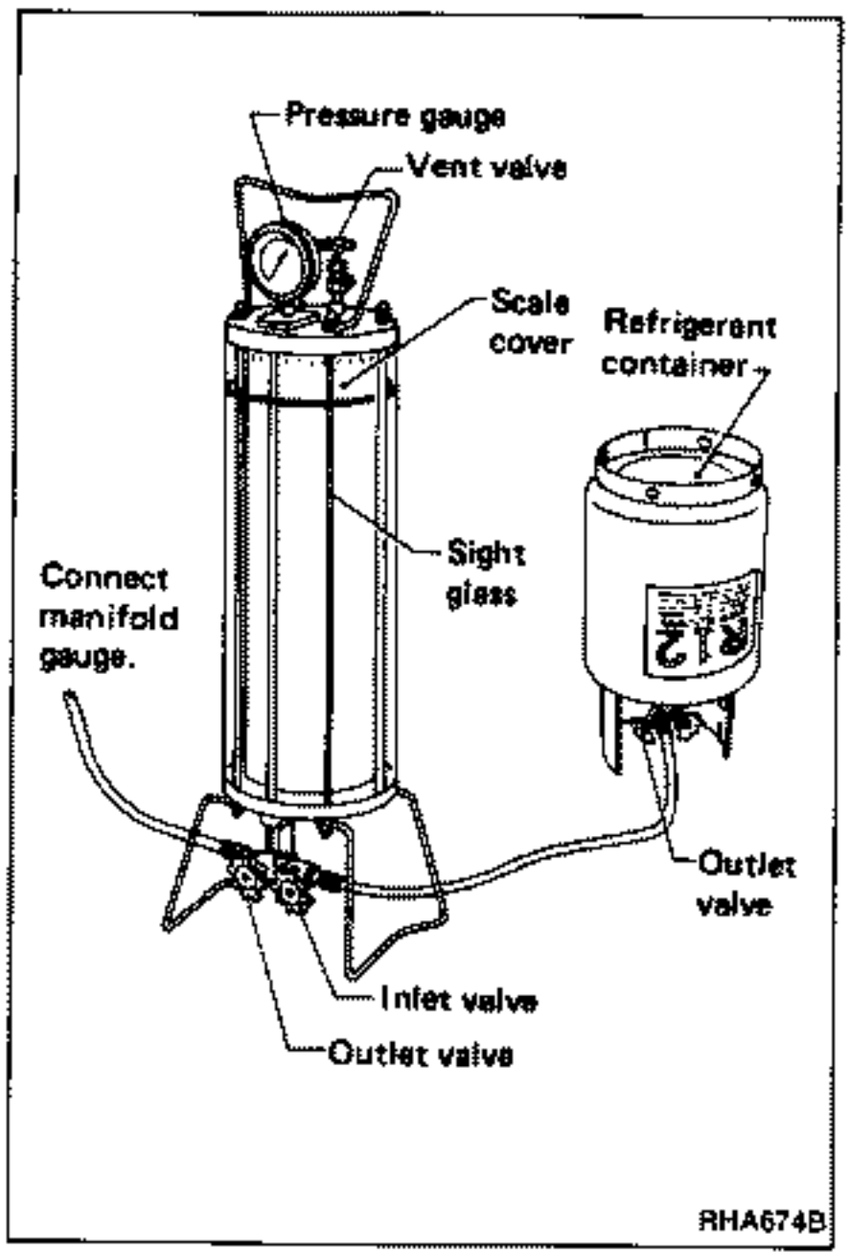

Charging cylinder

The charging cylinder is used to correctly measure the amount of refrigerant to be charged.

Features

- With the charging cylinder, the operator can measure correctly the amount of refrigerant to be charged into the system.
- Change in the refrigerant volume due to a change in temperature and pressure can be supplemented, and this ensures correct charging of refrigerant.

CAUTIONS:

- **Never attempt to carry the charging cylinder containing refrigerant.**
- **Do not put the charging cylinder in a hot place. If the temperature and pressure of the refrigerant in the cylinder increase, the safety valve will be pushed open and the refrigerant will be released into the atmosphere.**
- **Do not expose the cylinder to the direct sunlight.**
- **Do not over-charge the refrigerant so that it exceeds the maximum limit of the cylinder.**
- **Do not charge the cylinder with more refrigerant than is needed.**

Refrigerant Charging Procedure

WORK PROCEDURE

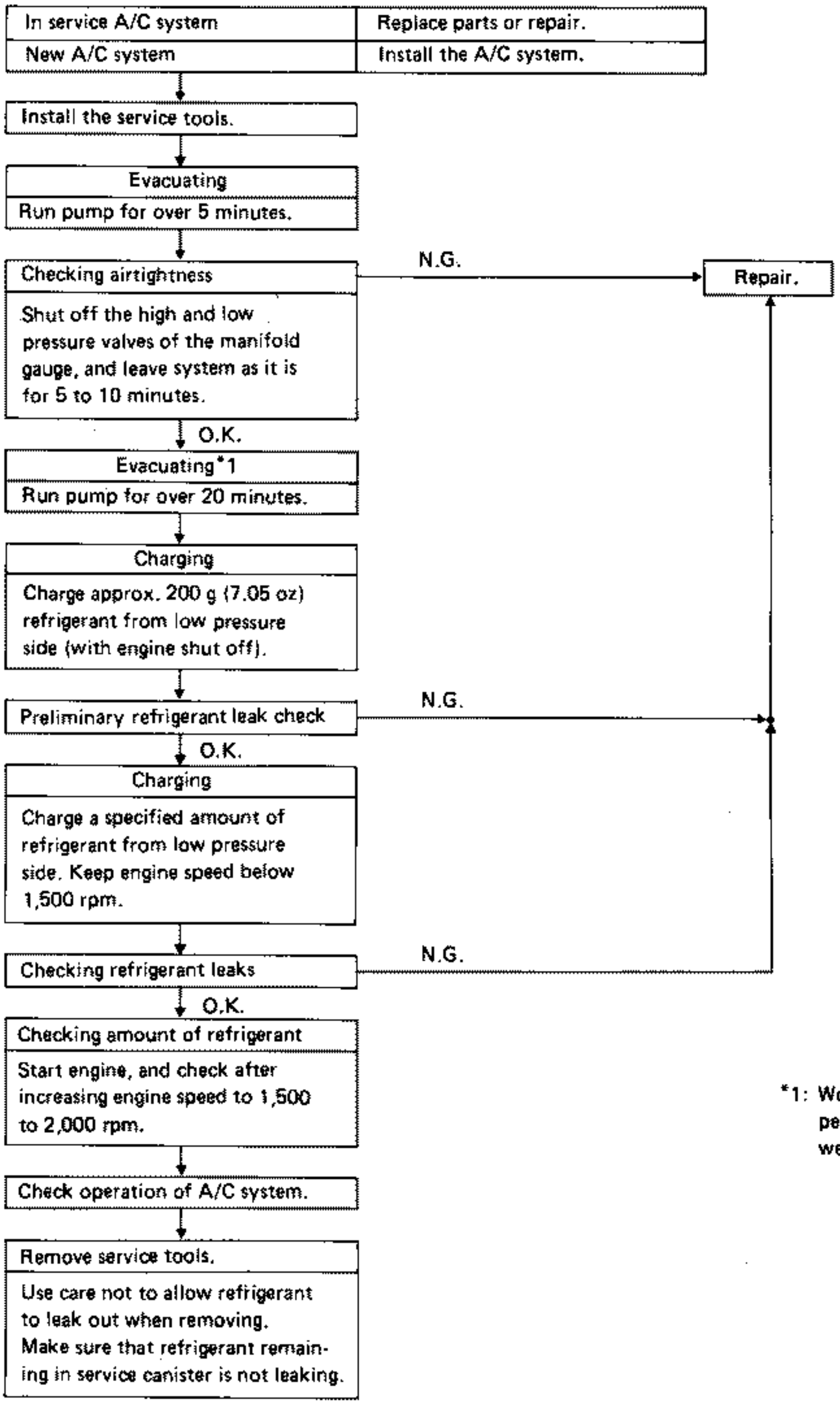

*1: Working operation depends upon the performance of the pump and the weather.

Z.ONE.DATSUN

Refrigerant Charging Procedure (Cont'd)

SETTING OF SERVICE TOOLS

Make sure that the service tools are set as indicated below and that no refrigerant is leaking.

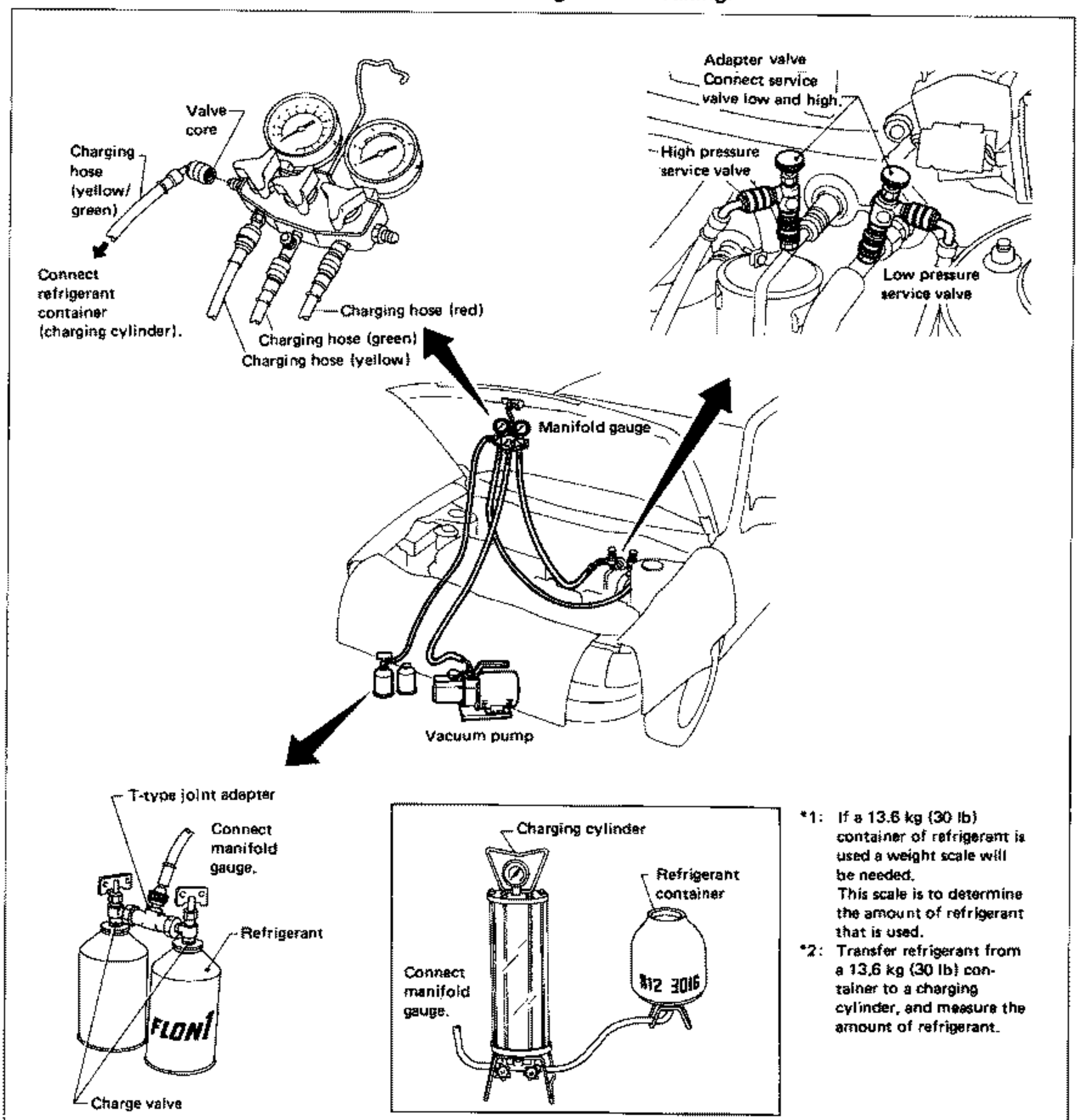

*1: If a 13.6 kg (30 lb) container of refrigerant is used a weight scale will be needed.
This scale is to determine the amount of refrigerant that is used.

*2: Transfer refrigerant from a 13.6 kg (30 lb) container to a charging cylinder, and measure the amount of refrigerant.

RHA592B

Evacuation

Why evacuation is needed

When installing a car air conditioner, it is essential to completely remove air and water from the inside of the refrigeration system beforehand. This process is called evacuation. If the air conditioner is operated without completely removing these substances, the following abnormalities may result.

- Poor cooling due to reduction in the thermal exchange rate in condenser
- Moisture recirculating together with the refrigerant through the refrigeration system freezes at the port of the cold expansion valve. This impedes the normal refrigerant flow, thus lowering the cooling efficiency.
- The refrigerant reacts with water chemically, generating corrosive hydrochloric acid thus causing corrosion to the refrigeration system components.

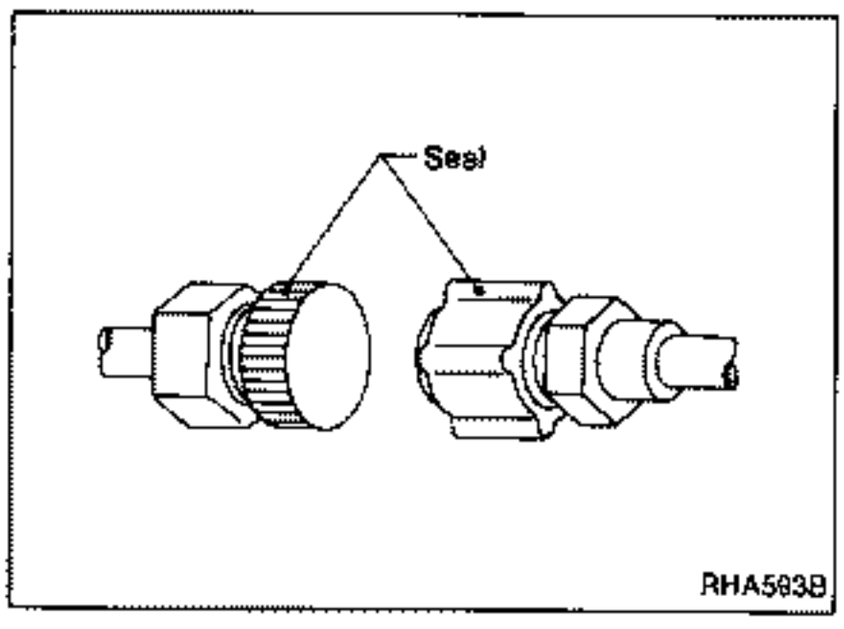

CAUTION:

- **When installing an air conditioner in the vehicle, the pipes must be connected as the final stage of the operation. The seal caps of the pipes and other components must not be removed until their removal is required for connection.**
- **Before installing any air conditioner component that has been stored in a cool location to a vehicle that has been exposed to the hot sun, leave the component as it is for some time in a hot location with its seal cap unremoved. This step is necessary to prevent condensation of moisture inside the cold component.**
- **Thoroughly remove moisture from the refrigeration system before charging the refrigerant.**

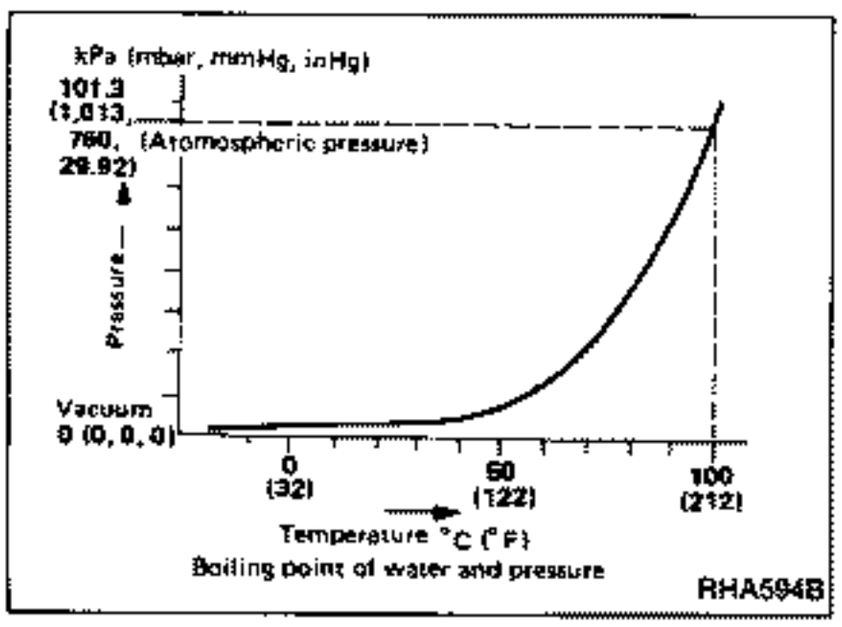

Relation between boiling point of water and atmospheric pressure

Water boils at 100°C (212°F) under normal atmospheric pressure. The boiling point lowers with the atmospheric pressure. This characteristic of water is utilized to purge it from the system. The pressure inside the refrigeration system is lowered by a vacuum pump so that water can evaporate at a normal temperature. The water vapor is then discharged to the outside together with the air.

Evacuation (Cont'd)

Vacuum pump

The degree of evacuation greatly affects the cooling capacity of the air conditioner and the service life of the refrigeration system components. However, use of a vacuum pump having insufficient capacity results in prolonged evacuation. It is necessary to use a vacuum pump with a sufficiently large capacity and also to maintain the pump to ensure its original pumping capacity.

EVACUATION PROCEDURE

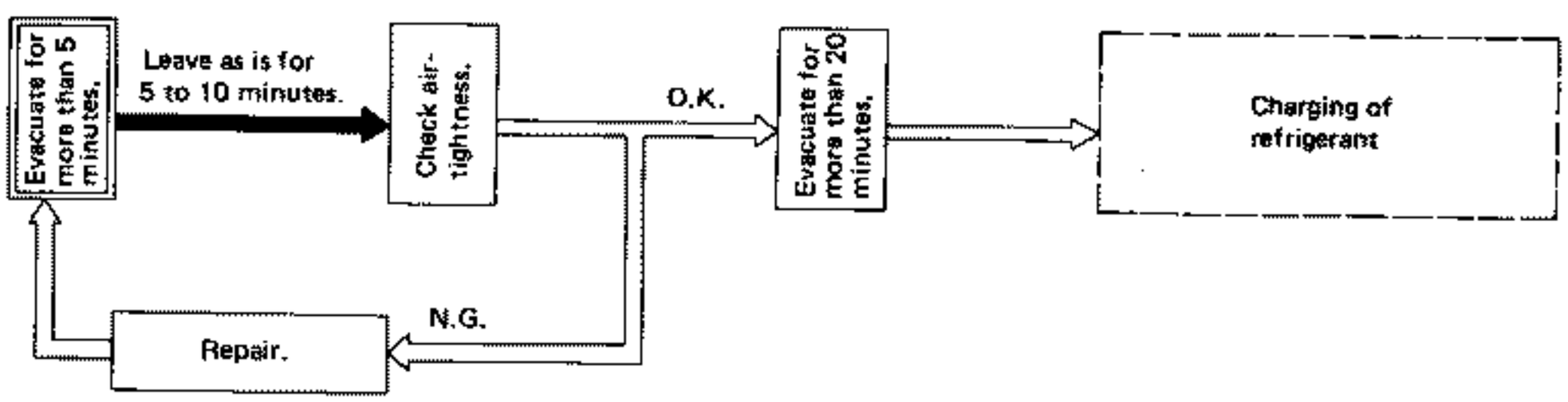

RHA595B

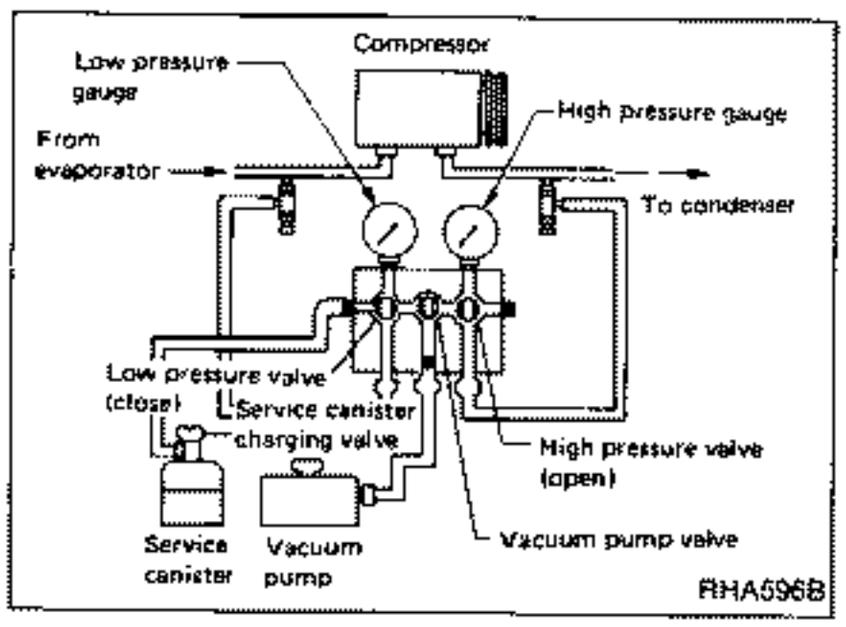

RHA596B

1. Completely tighten the low pressure and high pressure adapter valves.
   Tightening of the valves opens the service canister valve.
2. Open the high and low pressure valves and vacuum pump valve of the gauge manifold.
3. Run the vacuum pump.

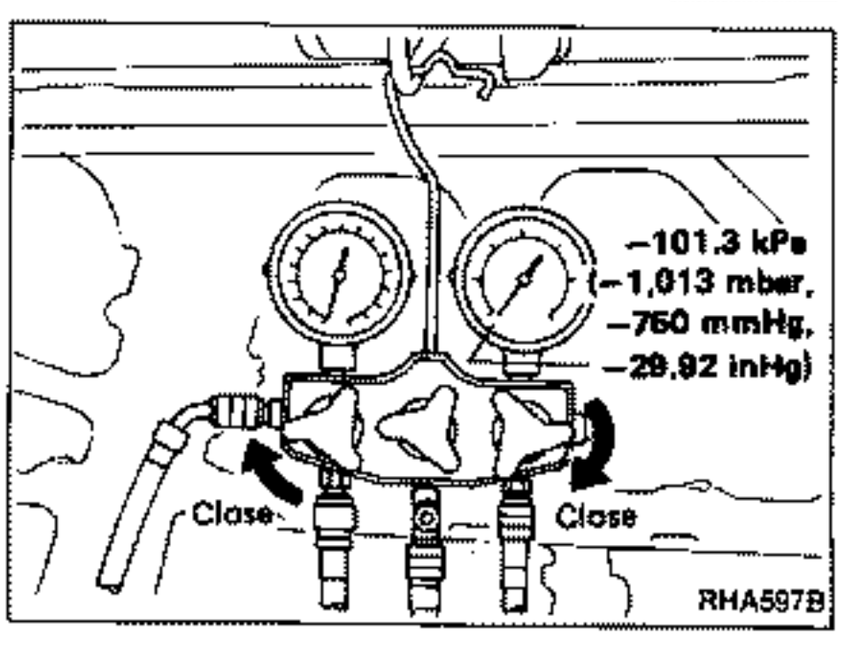

RHA597B

4. Perform evacuation for more than five minutes to stabilize the vacuum inside the system. Check to ensure that the low pressure gauge indicates –98.6 to –101.3 kPa (–986 to –1,013 mbar, –740 to –760 mmHg, –29.13 to –29.92 inHg).
5. Shut off the high and low pressure valves and vacuum pump valve of the gauge manifold.

Evacuation (Cont'd)

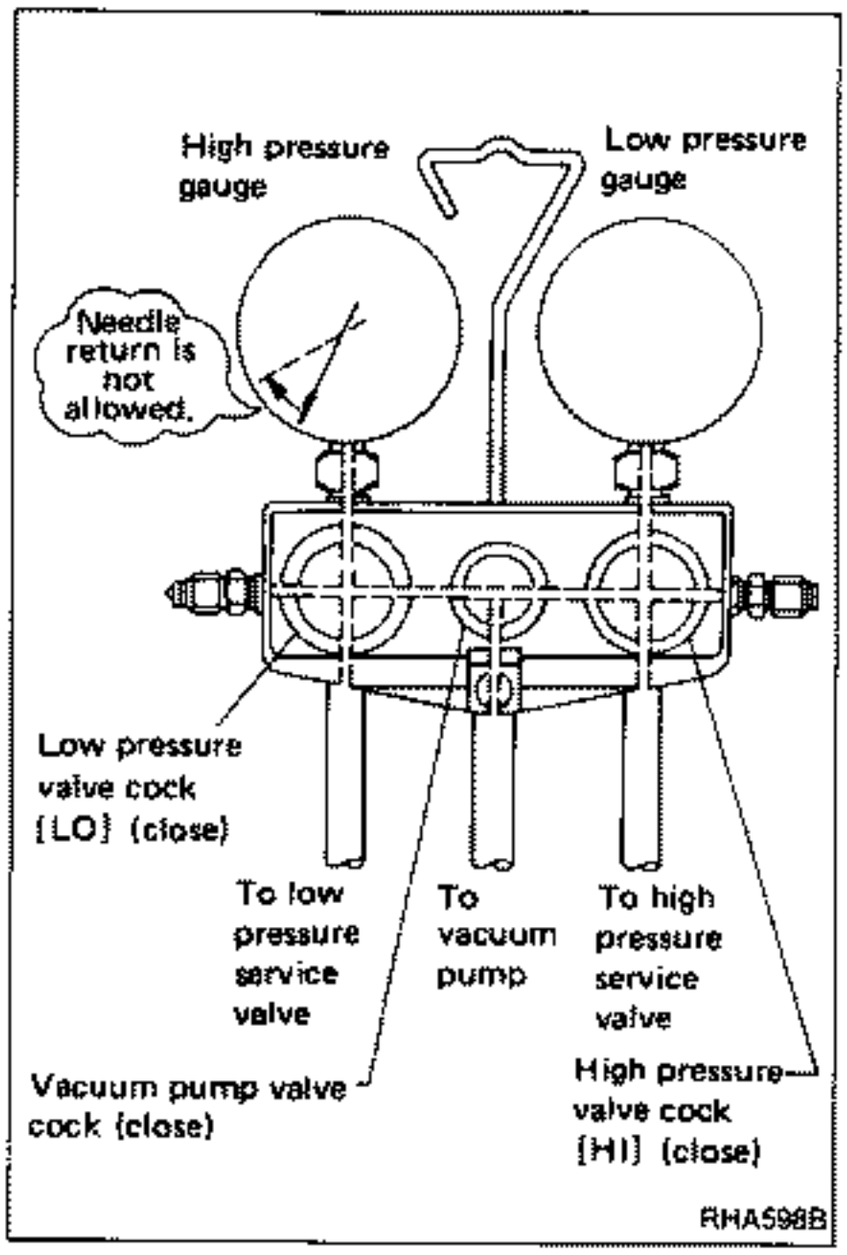

CHECKING AIRTIGHTNESS

1. Shut off the high and low pressure valves and vacuum pump valve of the gauge manifold, and leave the system as it is for 5 to 10 minutes.
2. Make sure that the needle of the low pressure gauge will not move back toward the atmospheric pressure side (gauge pressure 0).

If any reverse movement is noted, it indicates poor system airtightness. Service the system until airtightness is complete. If pressure changes approx. 13.3 kPa (133 mbar, 100 mmHg, 3.94 inHg) in 10 minutes, the refrigerant in the system will be exhausted in about one month.

MAINTENANCE

If inadequate airtightness is detected, check and service the following portions:

Leak from pipe joints	Leak from gauge manifold
• Contaminated, damaged, or deformed O-ring • No oil applied when connecting pipe • Excessive or insufficient tightening of pipe joint	• Malfunctioning hose • Improper installation of gauge • Malfunctioning valve • Malfunctioning packing

EVACUATION

If no abnormality is found during the airtightness check, perform evacuation again for more than 20 minutes.

1. Run the vacuum pump.
2. Open the high and low pressure valve and vacuum pump valve of the gauge manifold.
3. Evacuate for more than 20 minutes.
4. Close the high and low pressure valves and vacuum pump valve of the gauge manifold.

Charging Refrigerant

Procedure

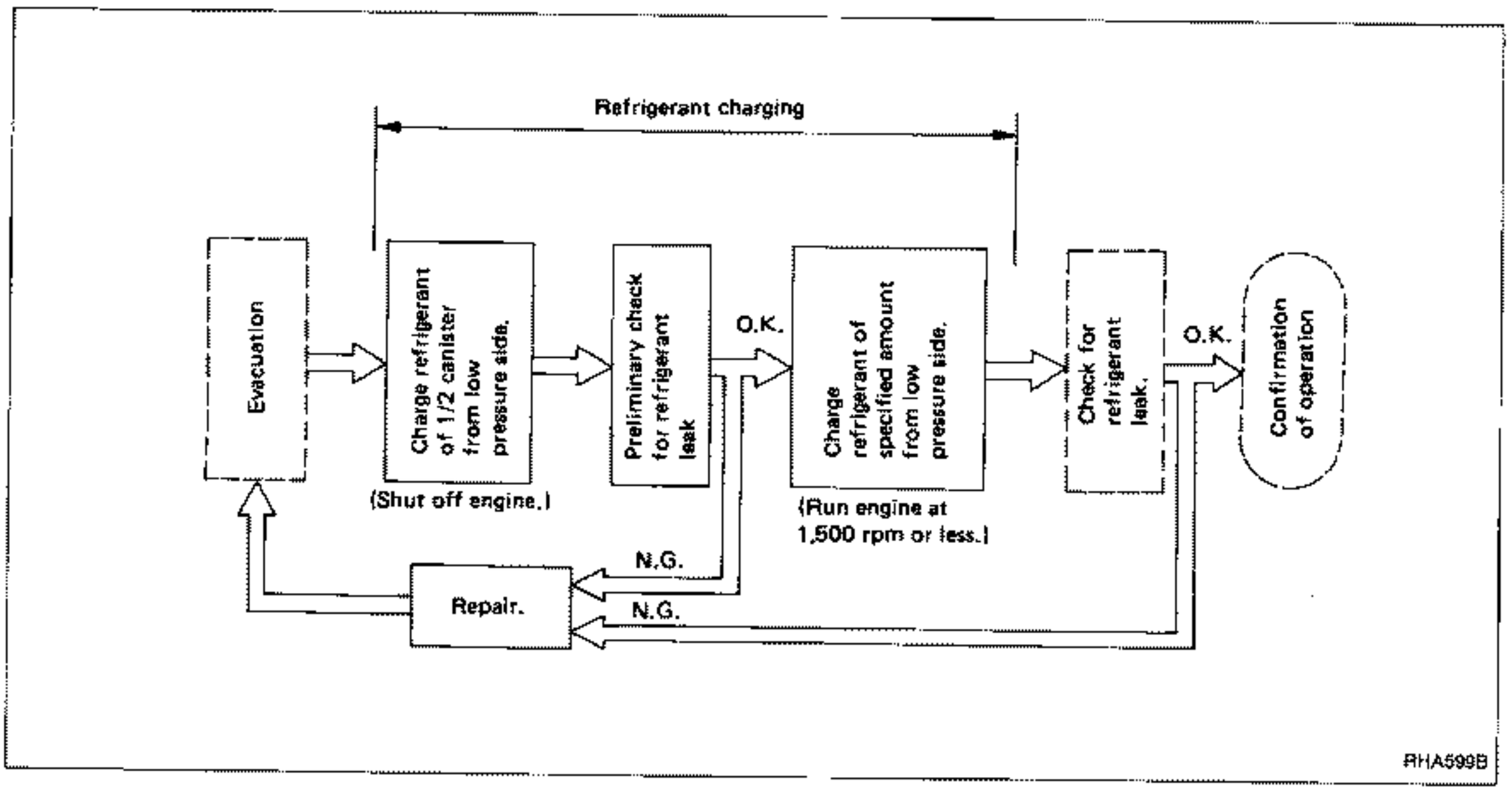

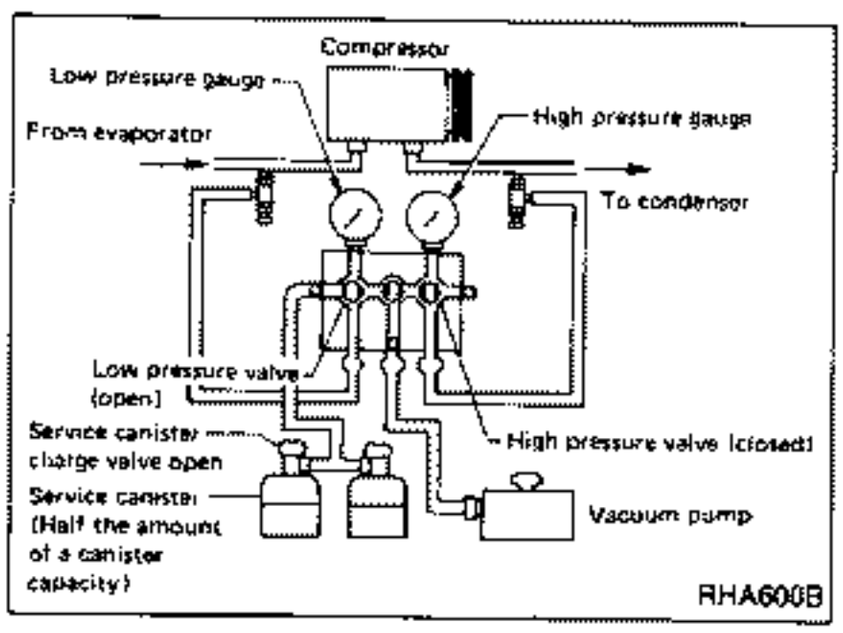

PRELIMINARY CHARGING PROCEDURE

This operation is performed to check the refrigerant leakage and to protect the compressor.

1. Turn the charge valve handle to open a hole in the service canister to allow the refrigerant to flow through the gauge manifold.
2. Open the low pressure valve of the gauge manifold, and charge the refrigerant into the system from the low pressure side.
3. After charging approx. 200 g (7.05 oz) of refrigerant, shut off the low pressure valve.

CAUTION:

- **The refrigerant charging operation must be performed after shutting off the engine. If the compressor is operated with an insufficient amount of refrigerant, the compressor may seize up due to a lack of return of the compressor oil.**
- **Do not shake nor hold the refrigerant canister upside down.**

Charging Refrigerant (Cont'd)

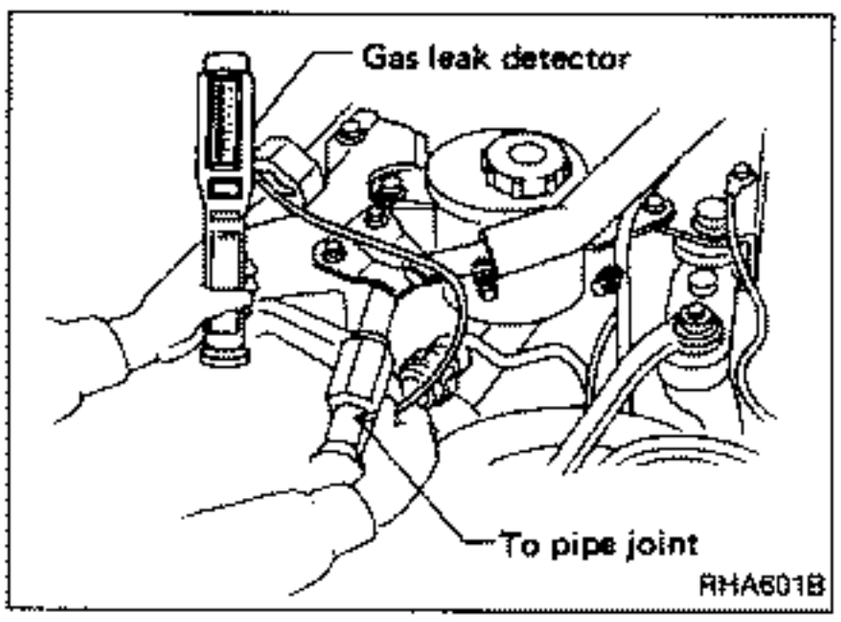

PRELIMINARY CHECK FOR REFRIGERANT LEAKS

1. Make sure that the gauge manifold valve is closed.
2. Check for refrigerant leak from each connector in the system using the leak detector.

At this point, the pressure in the system is not high. Only large amounts of refrigerant leak due to loose pipe joints, etc. can be detected.

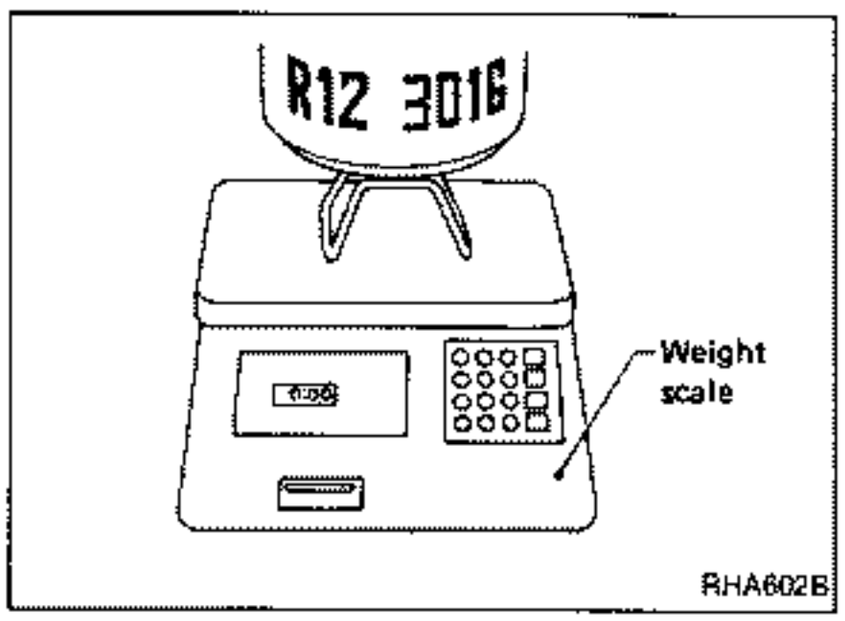

CHARGING REFRIGERANT

1. Make sure that the valves of the gauge manifold are closed.
2. Start the engine, and run the compressor.
3. Slowly open the low pressure valve of the gauge manifold.
4. Charge the specified amount of refrigerant.

The charged amount of refrigerant can be determined by subtracting the weight of the canister measured after charging from its weight measured before charging.

WARNING:

Never attempt to open the high pressure valve while the engine is running. If opened, the pressure in the refrigerant canister will increase, thus causing an explosion.

CHARGING REFRIGERANT WITHOUT USING T-JOINT ADAPTER

If the service canister used for charging is empty, replace the canister with a new one, and proceed as follows:

1. Make sure by shaking the canister that no refrigerant is left inside.
2. Shut off all the valves of the gauge manifold.
3. Disconnect the charge valve from the emptied canister, and attach it to a new service canister.
4. Run the vacuum pump, and open the vacuum valve (center) of the gauge manifold to purge air from the inside of the hose.
5. Run the vacuum pump for approx. 30 seconds.
6. Shut off the vacuum valve (center) and stop the vacuum pump.
7. Unseal the new canister, and open the charge valve.
8. Open the low pressure valve to charge the refrigerant into the system.

Charging Refrigerant — Charging cylinder

WORK PROCEDURE

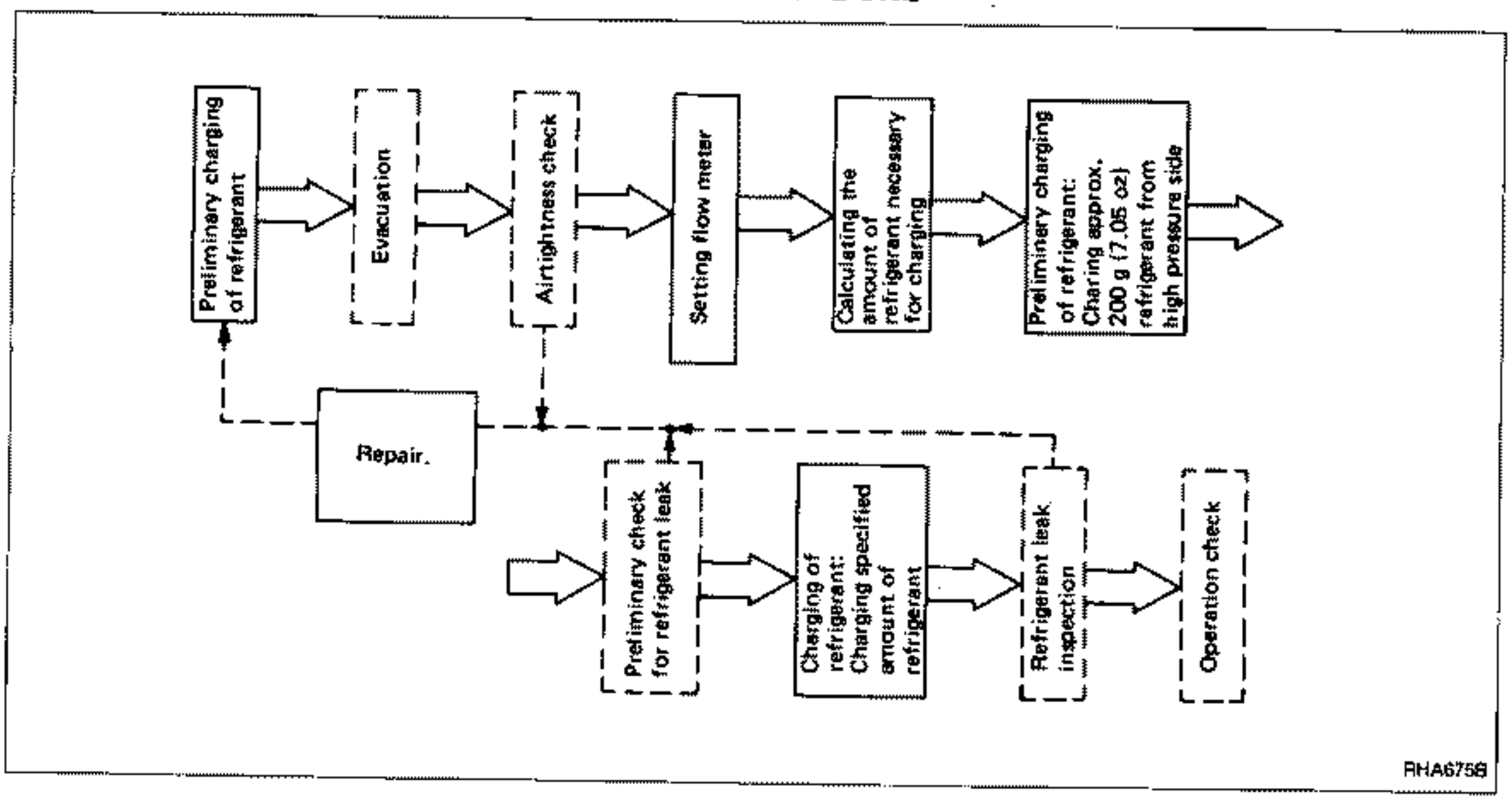

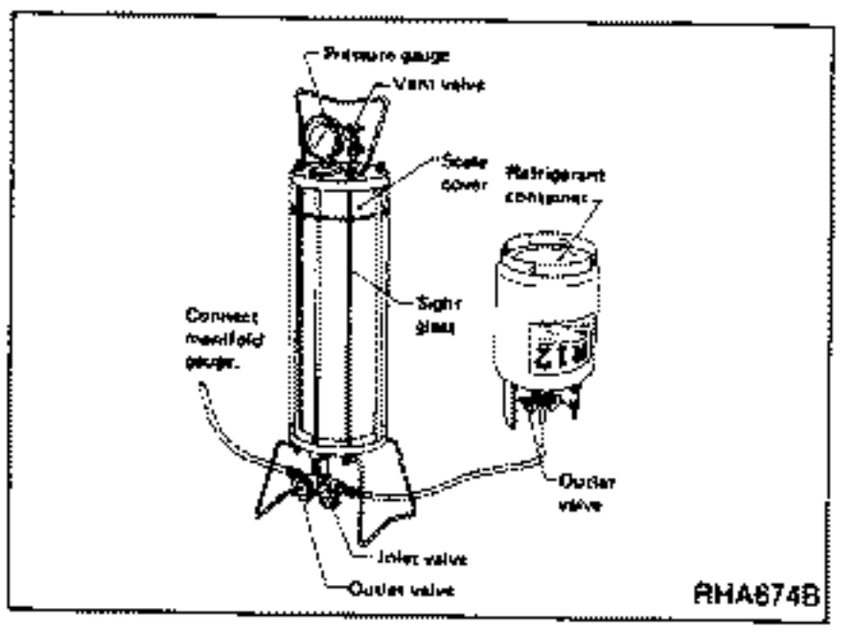

Install the charging cylinder correctly to the vehicle.
Refer to "SETTING OF SERVICE TOOLS" in "Refrigerant Charging Procedure".

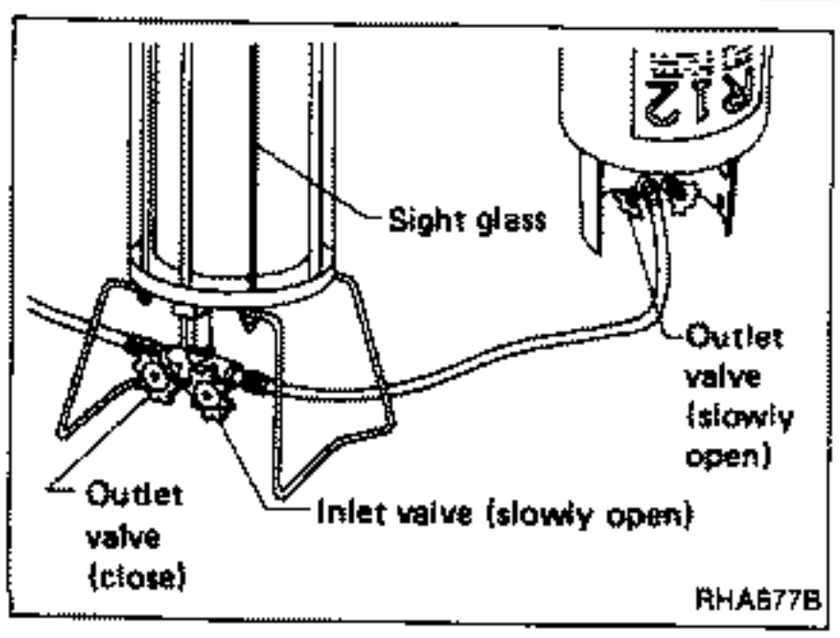

PRELIMINARY CHARGING OF REFRIGERANT-1

1. Make sure that the inlet and outlet valves of the charging cylinder are closed.
2. Slowly open the outlet valve of a refrigerant container [13.6 kg (30 lb)].
3. Slowly open the inlet valve of the charging cylinder.

The refrigerant will flow into the sight glass of the charging cylinder as the valve is opened.

Charging Refrigerant — Charging cylinder (Cont'd)

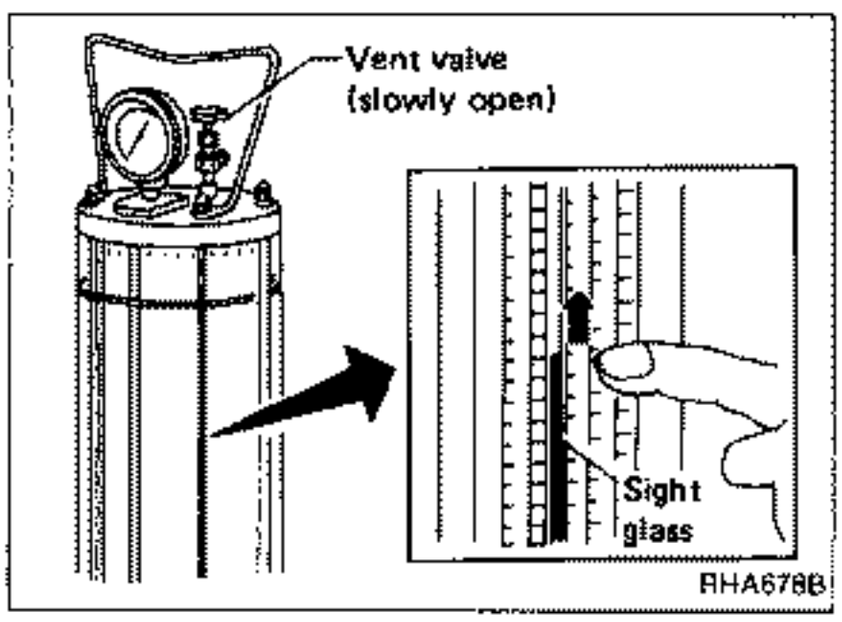

4. Slowly open the upper vent valve to release pressure from the charging cylinder. While doing so, continue charging until the required amount of refrigerant is reached.

The refrigerant volume changes with the temperature and pressure. It is necessary to charge refrigerant with a little more than the required amount (indicated on the sight glass).
Refer to the CAUTION label attached on the vehicle, or to the Service Manual.

5. Close the inlet valve and upper vent valve of the charging cylinder.

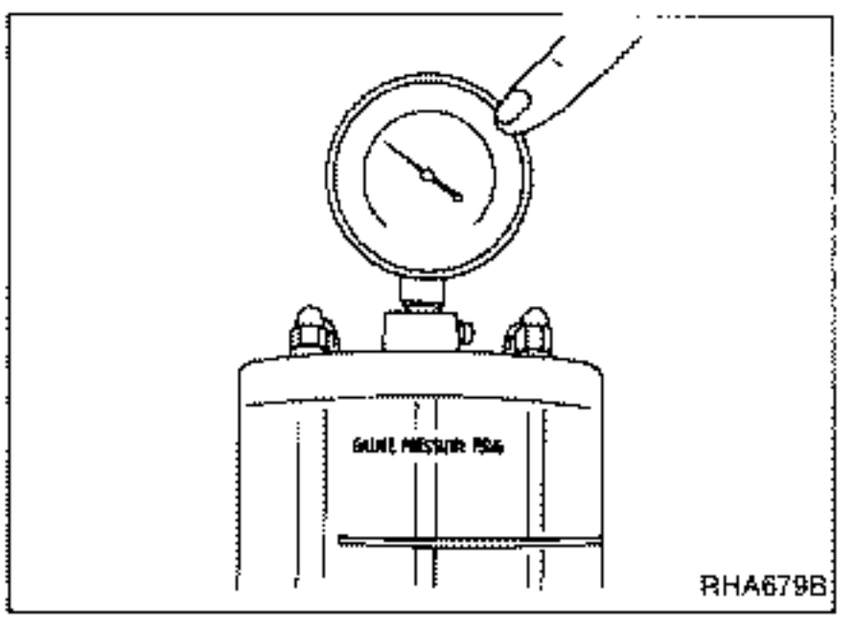

6. Turn on the heater switch (the charging cylinder is provided with a heater.)

The refrigerant charging time can be reduced by heating the refrigerant to increase its pressure. In this case, do not allow the pressure in the cylinder to rise higher than 1,030 kPa (10.30 bar, 10.5 kg/cm^2, 150 psi). (If pressure rises above this level, turn off the heater.)
The pressure in the charging cylinder can be measured by the upper pressure gauge.

EVACUATION AND AIRTIGHTNESS CHECK

Refer to "EVACUATION" and "CHECKING AIRTIGHTNESS" in "Evacuation".

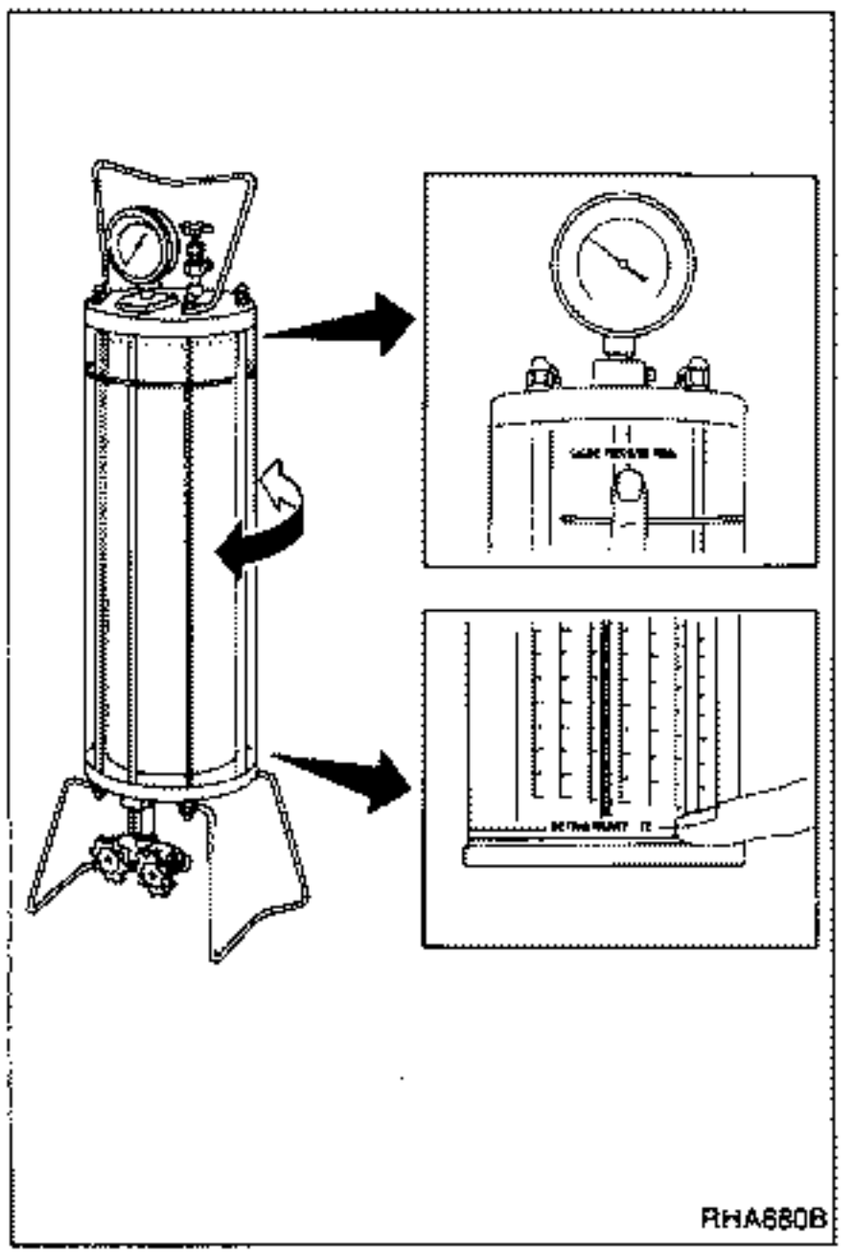

SETTING OF FLOW METER

1. Rotate the charging cylinder main body until the scale for R12 is at the correct position on the sight glass.
2. Read the charging cylinder pressure gauge.
3. Rotate the charging cylinder so that the scale of the charging cylinder agrees with the pressure value indicated on the pressure gauge.
4. Open the outlet valve of the charging cylinder.

Charging Refrigerant — Charging cylinder (Cont'd)

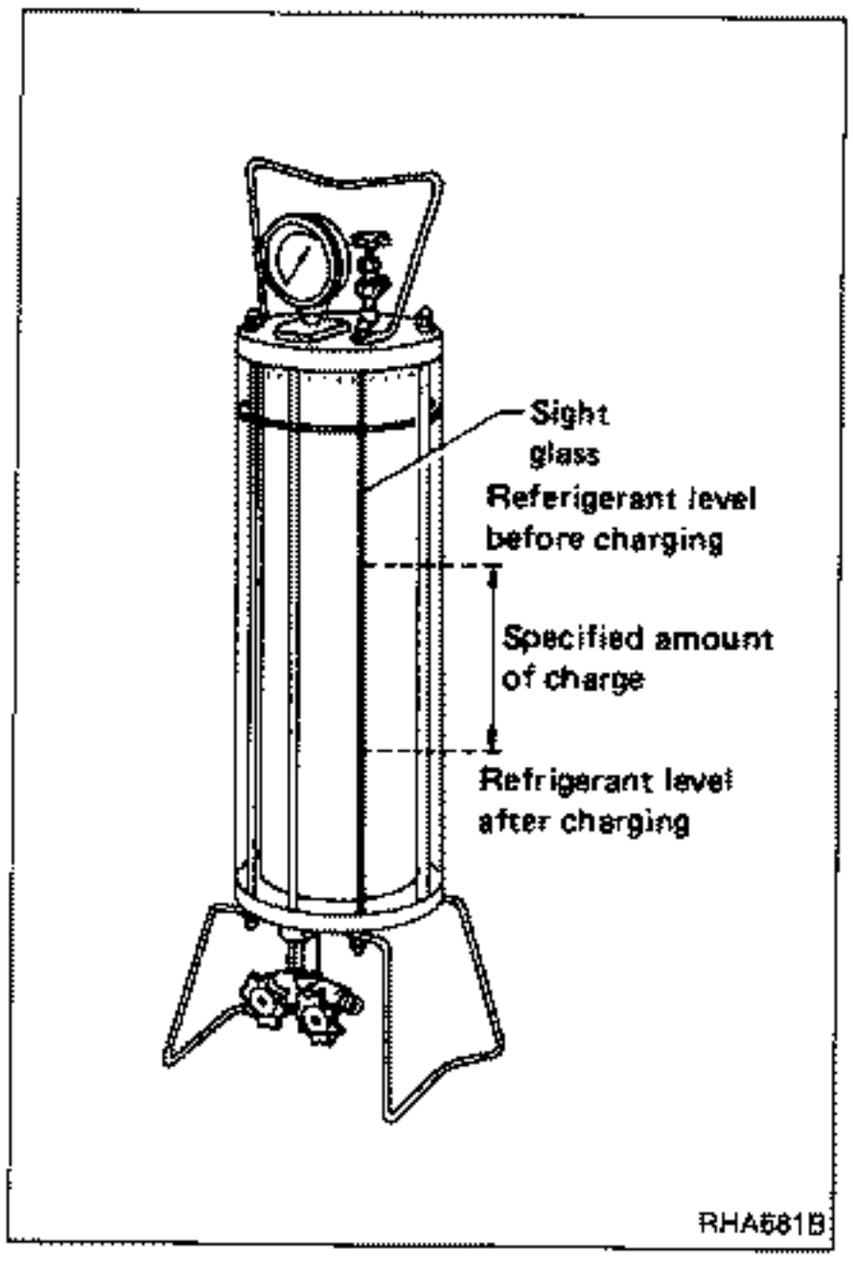

CALCULATING CHARGING AMOUNT OF REFRIGERANT

1. Record the amount of refrigerant in the sight glass before charging.
2. Subtract the required amount of refrigerant (charge quantity specified for the vehicle) from the amount of refrigerant recorded in step 1. Charge refrigerant into the system until the remaining value equals to the value indicated on the sight glass.

Example:

Level in sight glass: 3 lb 8 oz
Charge specification (from Service Manual) 2.0 - 2.4 lb.
Calculate charge quantity into lb and oz as follows: 1 lb = 16 oz, and 0.1 lb = 1.6 oz, so that 2.0 lb = 32 oz, 2.4 lb = 32 + (4 x 1.6) = 32 + 6.4 = 38.4, round off to 38. Therefore our charge quantity will be between 32 and 38 oz, or 2 lb 0 oz to 2 lb 6 oz. Subtract 2 lb 6 oz from the level in the sight glass (3 lb 8 oz) = 1 lb 2 oz.
This will be our ending point.

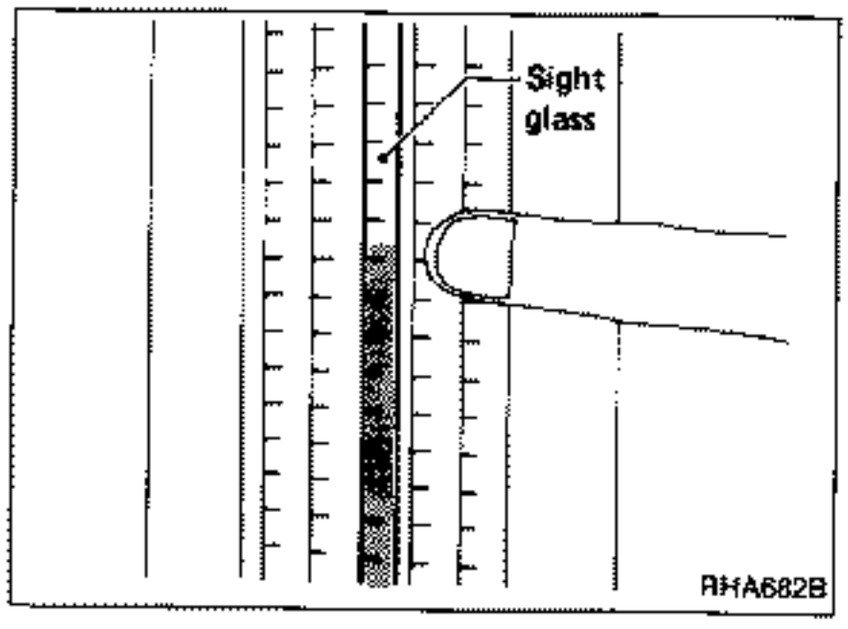

PRELIMINARY CHARGING OF REFRIGERANT-2

1. Slowly open the high pressure side valve of the manifold gauge to charge refrigerant from the high pressure side.
2. Close the high pressure valve after charging approx. 200 g (7.05 oz) refrigerant.

CAUTION:
The refrigerant in the charging cylinder is kept in the liquid state, so the refrigerant should be charged from high pressure side. Do not start the engine with the high pressure valve kept open.

PRELIMINARY CHECK FOR REFRIGERANT LEAKS

Refer to "PRELIMINARY CHECK FOR REFRIGERANT LEAKS" in "Charging Refrigerant".

CHARGING REFRIGERANT

1. Slowly open the high pressure valve of the manifold gauge, and charge the calculated amount of refrigerant in "CALCULATING CHARGING AMOUNT OF REFRIGERANT".

CAUTION:
The refrigerant in the charging cylinder is kept in the liquid state, so the refrigerant should be charged from high pressure side. Do not start the engine with the high pressure valve kept open.

2. Close the high pressure valve of the manifold gauge.
3. Make sure that the calculated amount of refrigerant is in the sight glass.
4. Close the charging cylinder outlet valve.
5. Turn off the heater if it is on (when using heater equipped type).

Inspection for Refrigerant Leaks

WORK PROCEDURE

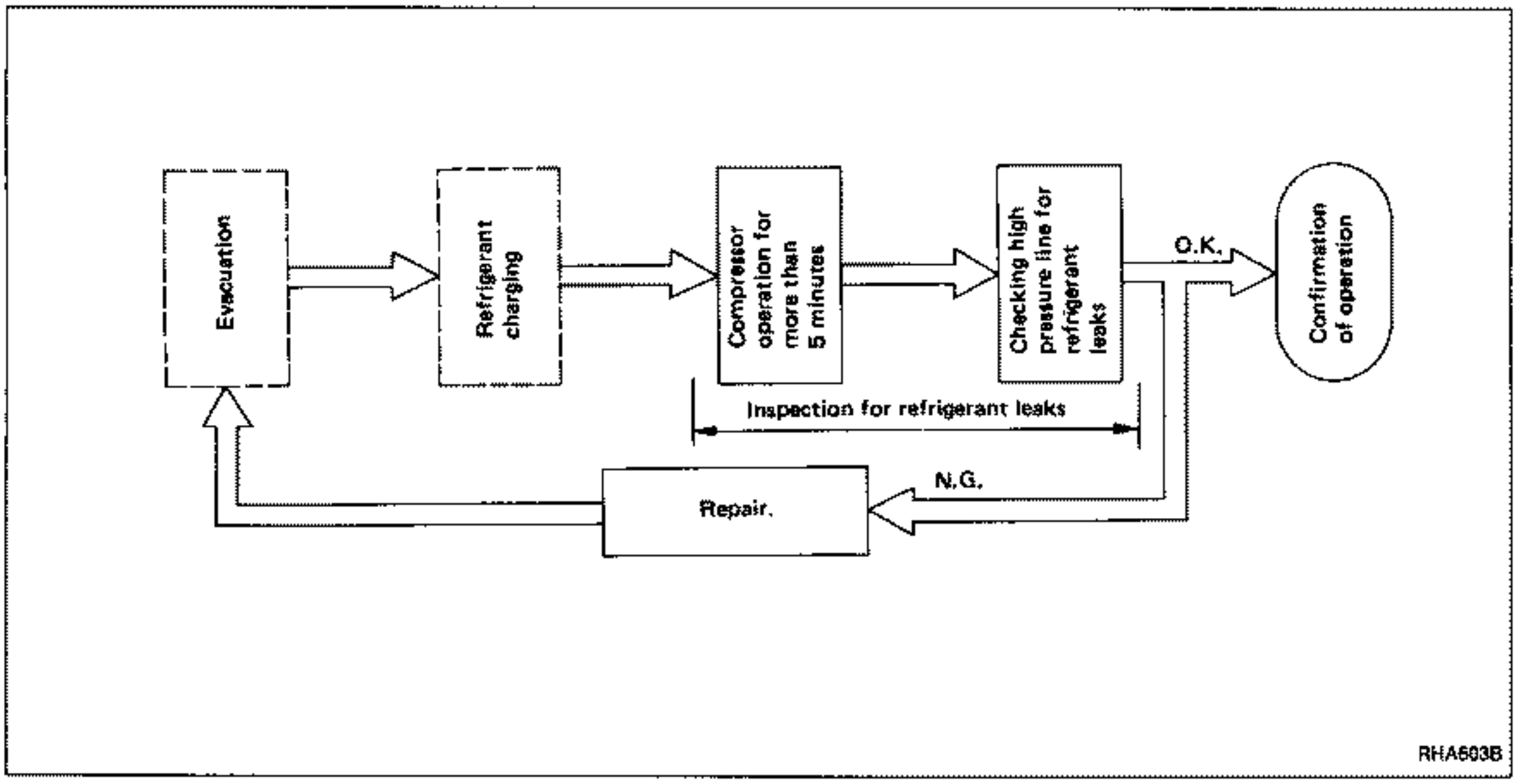

To facilitate inspection for refrigerant leaks, establish the following conditions:

- Start the engine.
- Run the air conditioner.
- Set the blower fan control to MAX.
- Set the temperature control to FULL COLD.
- Run the refrigerant system for more than 5 minutes after setting the above-mentioned conditions (to circulate the refrigerant through the system).

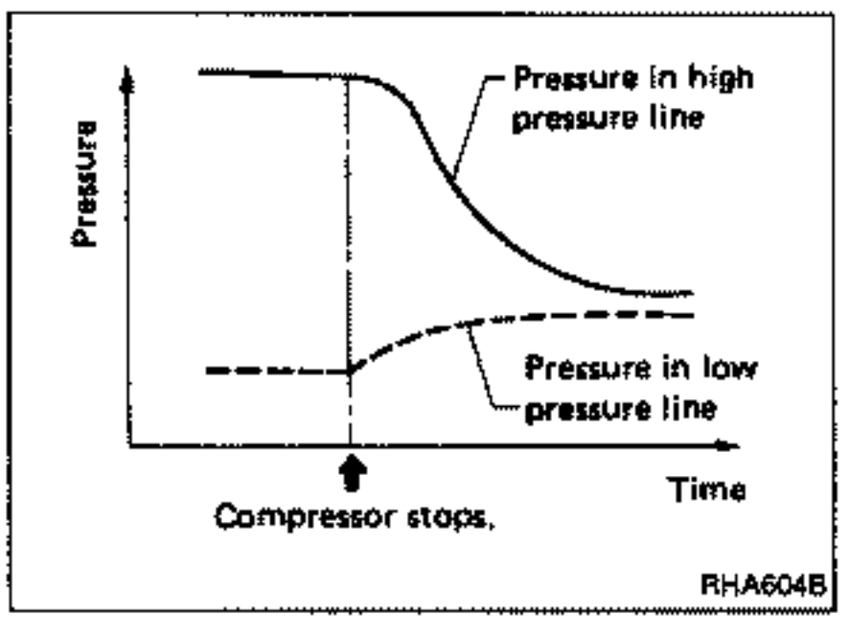

Refrigerant leaks should be checked immediately after stopping the engine, beginning with the high pressure line, using a gas leak tester. This is because the pressure in the high pressure line drops gradually after the refrigerant circulation stops while the pressure in the low pressure line rises gradually as shown in the graph. Leaks can be detected easily when pressure is high.

Confirmation of Amount of Charged Refrigerant

The amount of refrigerant charged into the system can be observed through the sight glass by watching the flow of the refrigerant and by reading the high pressure and low pressure manifold gauges under the following conditions:

CONDITIONS

- Door window: Open
- A/C switch: ON (Manual Air Conditioner)
- Auto switch: ON (Auto Air Conditioner)
- TEMP. setting: Max. COLD
  (Manual Air Conditioner)
  LO (Auto Air Conditioner)
- FAN speed: 4 (Manual Air Conditioner)
  HI (Auto Air Conditioner)
- Check sight glass after a lapse of about five minutes.

WORK PROCEDURE

Engine speed: Approx. 1,500 rpm

↓

After warming up engine, adjust intake air temperature to 30 to 35°C (86 to 95°F).
Wait until high pressure is stabilized at approx. 1,471 kPa (14.7 bar, 15 kg/cm^2, 213 psi).*1

*1: Cover the entire condenser until the required pressure is indicated.

↓

Check the sight glass of the refrigerant system.*2
Touch the high and low pressure pipes of the system to get an idea of the temperature.

*2: Refer to sight glass inspection.

↓

Check to see whether the refrigerant is free of white clouding and bubbles.

N.G. → If white clouding or air bubbles are found:

↓

Charge refrigerant until white clouding or bubbles disappear.

↓

Wait for some time to allow the refrigerant to stabilize after charging, then check the condition through the sight glass.

↓

Charge again with approx. 150 g (5.29 oz) of refrigerant.

O.K.

↓

Charged amount of refrigerant is O.K.

Confirmation of Amount of Charged Refrigerant (Cont'd)

Amount of charge / Check item	Appropriate	Refrigerant is insufficient	Almost no refrigerant	Overcharged, or air in system
Temperature of high and low pressure pipes	High pressure side is hot while low pressure side is cold.	High pressure side is warm and low pressure side is somewhat cold.	No difference is felt between high and low pressure sides.	High pressure side is very hot.
Flow of refrigerant viewed through sight glass	Mostly transparent. Occasionally some bubbles are seen when engine rpm is increased or decreased. 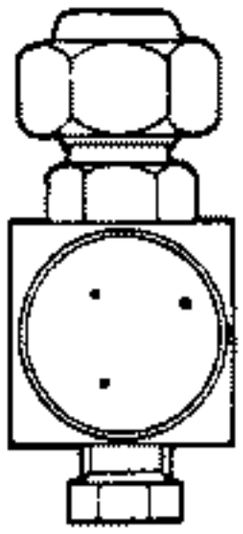	Bubbles are always flowing. Refrigerant is cloudy. 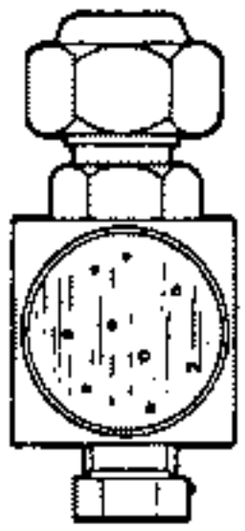	Nothing is visible. 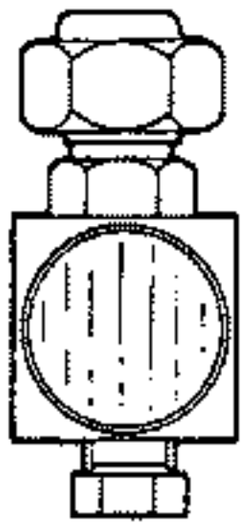	If overcharged, no bubbles are seen. If there is air in the system, large bubbles are seen.
Pressure	Normal high pressure: 1,373 - 1,765 kPa (13.7 - 17.7 bar, 14 - 18 kg/cm^2, 199 - 256 psi) Normal low pressure: 147 - 294 kPa (1.47 - 2.94 bar, 1.5 - 3 kg/cm^2, 21 - 43 psi)	Both high and low pressure values are insufficient.	High pressure value is very small.	Both high and low pressure values are excessive.
Action to take	**Air bubbles may be generated when the receiver drier strainer is clogged, or when the expansion valve is opened excessively.**	Add refrigerant after checking for leaks.	Check the refrigerant system.	Stop the compressor and extract excessive refrigerant. If air is found, perform evacuation, then charge the specified amount of refrigerant.

a. The bubbles seen through the sight glass are influenced by the ambient temperature. Since the bubbles are hard to see in comparatively low temperatures below 20°C (68°F), it is possible that a slightly larger amount of refrigerant would be filled if supplied according to the sight glass.

When the STV (for the auto air conditioning system) activates at an ambient temperature of less than 20°C (68°F), bubbles can sometimes be seen through the sight glass. However, the amount of refrigerant is correct if the following conditions are met:

(1) The air vent temperature is less than 7°C (45°F) as per the performance chart (HA-28).

(2) Bubbles disappear under the following conditions:

- **Door windows: Closed**
- **Auto switch: ON**
- **TEMP. setting: 40**
- **FAN speed: HI**
- **REC. switch: ON**

Check sight glass after a lapse of about five minutes.

Recheck the amount when it exceeds 20°C (68°F). At higher temperatures the bubbles are easy to see.

b. When the screen in the receiver drier is clogged, the bubbles will appear even if the amount of refrigerant is normal. In this case, the outlet side pipe of the receiver drier becomes considerably cold.

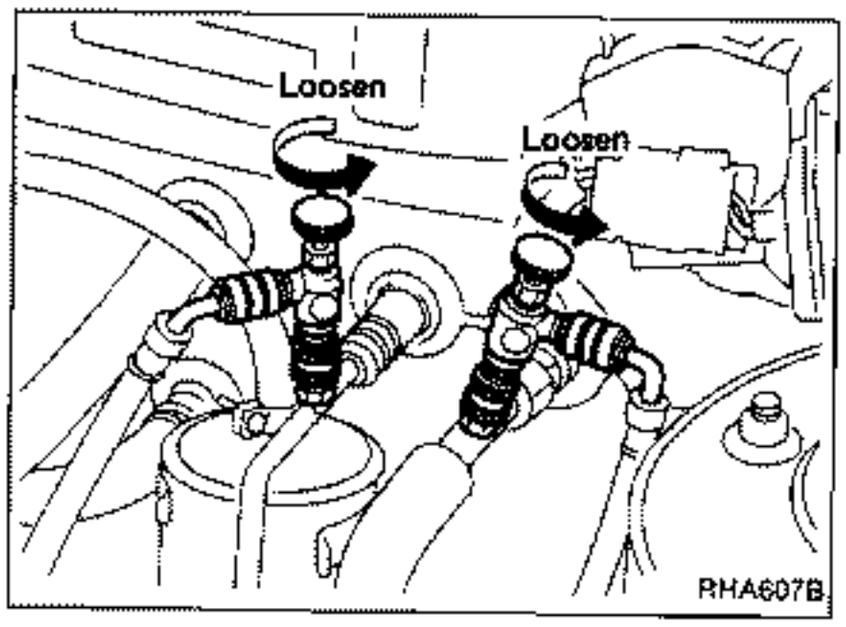

Recovery Procedure

REMOVAL OF REFRIGERANT CHARGING DEVICE

1. Completely loosen the adapter valves of the low pressure and high pressure lines.
   The inner valve of the adapter valve will prevent the refrigerant from leaking out.
2. Remove both the high-pressure and low-pressure side adapter valves from the on-vehicle service valve.

If adapter valve is not used for charging, proceed as follows to minimize the refrigerant discharge into the atmosphere.

3. Loosen the nut of the low pressure charging hose while pressing it against the service valve to prevent refrigerant leakage.
4. After loosening the nut, quickly remove the charge valve from the service valve.
5. Wait until the high pressure gauge indication drops to below 981 kPa (9.8 bar, 10 kg/cm^2, 142 psi), then similarly disconnect the high pressure charging hose.

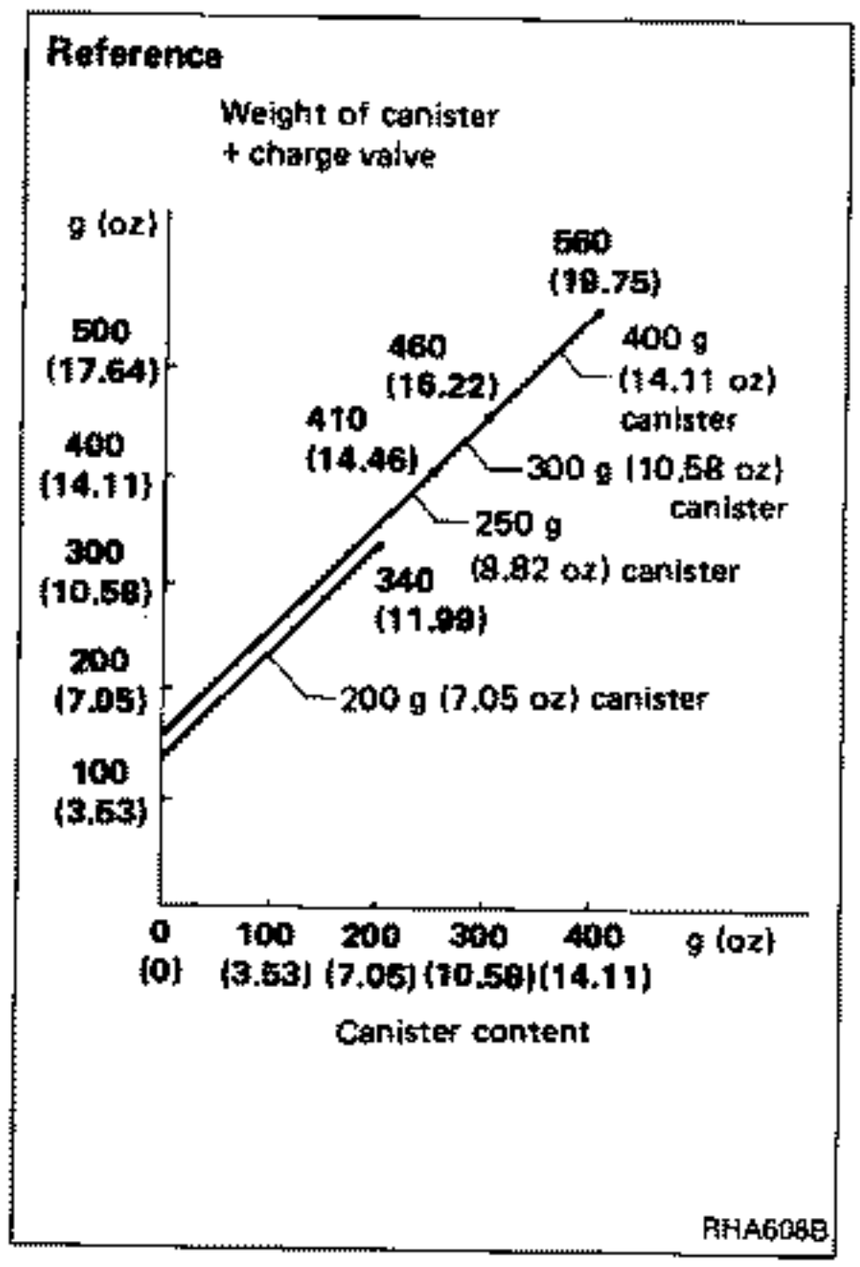

DISPOSAL OF RESIDUAL REFRIGERANT

Securely shut off each of the charge valves, adapter valves and manifold gauge valves to prevent the residual refrigerant from leaking out. Keep these valves in a safe location for the next charging.

The amount of refrigerant remaining in a service canister can be estimated from the Table shown here. It is recommended that a label be attached indicating the remaining amount in the canister.

Control Switches

SWITCHES AND THEIR CONTROL FUNCTIONS

Switch		Indicator illuminates: A/C	Indicator illuminates: recirculation	Air outlet	Intake air	Compressor
A/C		○				ON*1
Mode				VENT	*3	*1*4
				B/L	*5	*1*4
				FOOT	*5	*1*4
				F/D	*5	ON*1
				DEF	FRE	*1*4
			○		REC*2	ON*1

*1: Compressor is operated by thermo control amp. and E.C.C.S. control unit.
*2: Depending on mode switch position.
*3: When vent mode is selected, REC switch function is as in the following chart:
*4: Depending on A/C switch position.
*5: Depending on REC switch position.

A/C SW	REC: ON	REC: OFF
ON	REC	REC/FRE
OFF	REC	FRE

SHA267C

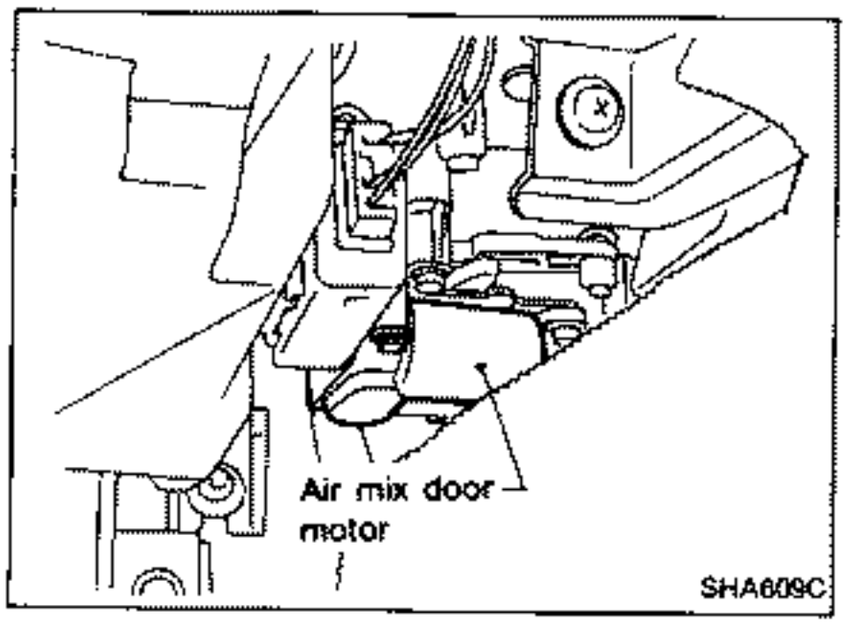

Specifications

AIR MIX DOOR MOTOR

The air mix door motor is attached to the heater unit. It rotates, opening the air mix door to the position set by the temperature control lever.
Motor rotation is conveyed through shafts and linkages. The air mix door position is fed back to the control amplifier by the Potentio Balance Resistor (P.B.R.) built into the air mix door motor.

Air mix door motor operation

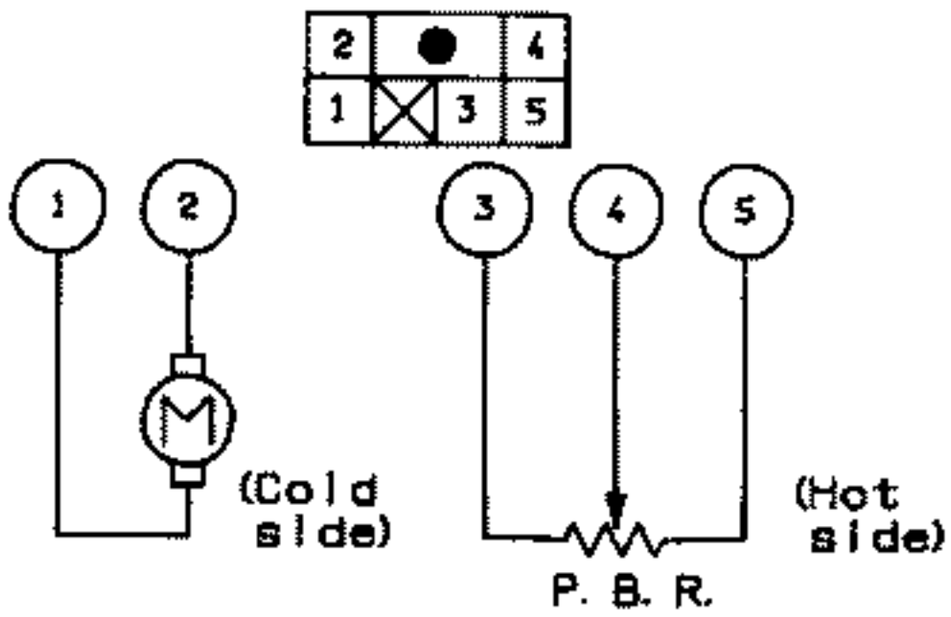

1	2	Air mix door operation	Direction of lever movement
⊕	⊖	COLD → HOT	Clockwise (Toward passenger compartment)
⊖	⊖	STOP	STOP
⊖	⊕	HOT → COLD	Counterclockwise (Toward engine compartment)

SHA637C

Characteristics of P.B.R.

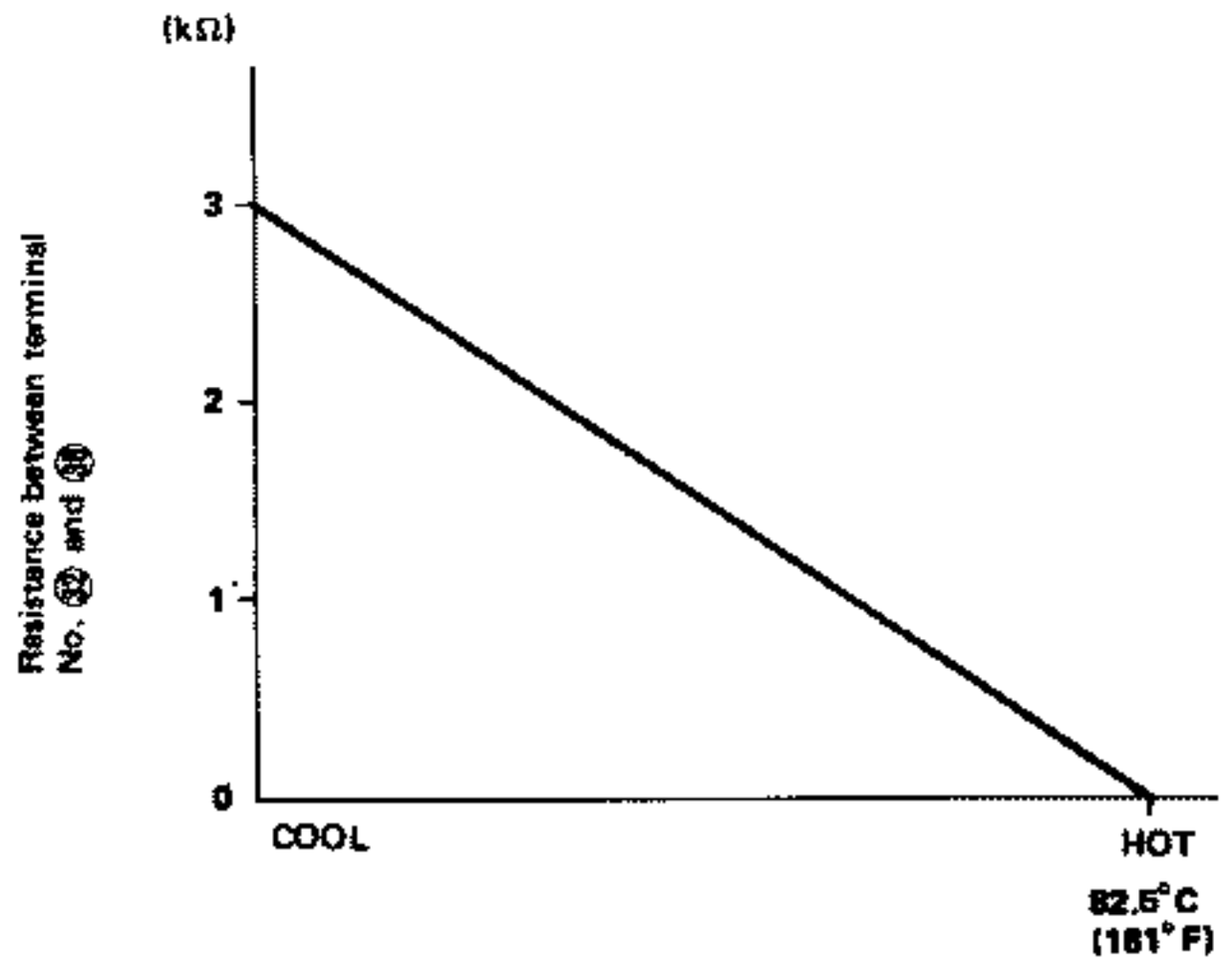

SHA270C

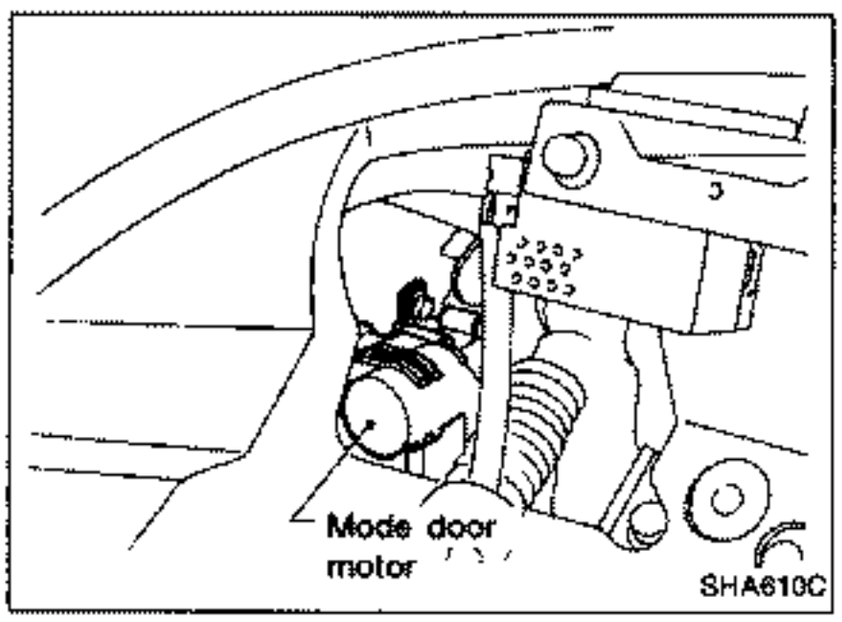

Specifications (Cont'd)

MODE DOOR MOTOR

When a mode switch is selected, the position switch built into it reads the corresponding mode to determine the direction of motor rotation. As soon as the desired mode is set, the position switch stops the motor.

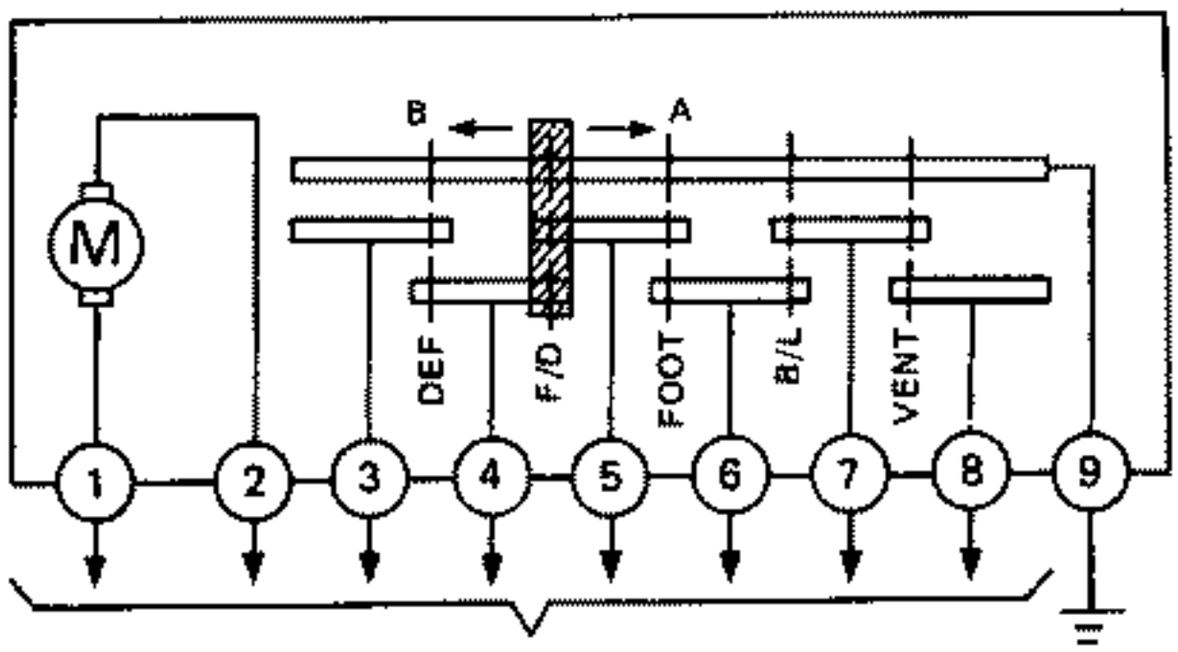

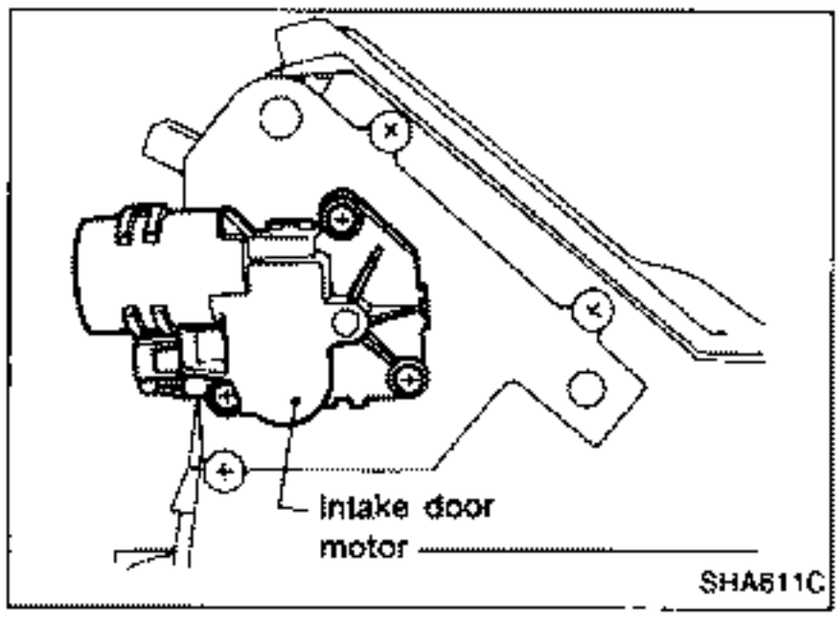

Specifications (Cont'd)

INTAKE DOOR MOTOR

The intake door motor is installed on the side portion of the intake unit. Using a rod and link it opens and closes the intake door. When the REC switch is ON (OFF), the ground line of the intake door motor is switched from terminal ㉑ to ㉒ (㉒ to ㉑). This causes the motor to start because the position switch contacts built into it are now set to the current flow position. The contacts turn along with the motor. When they reach the non-current flow position, the motor will stop. The motor always turns in the same direction. (FRE→REC→REC/FREC)

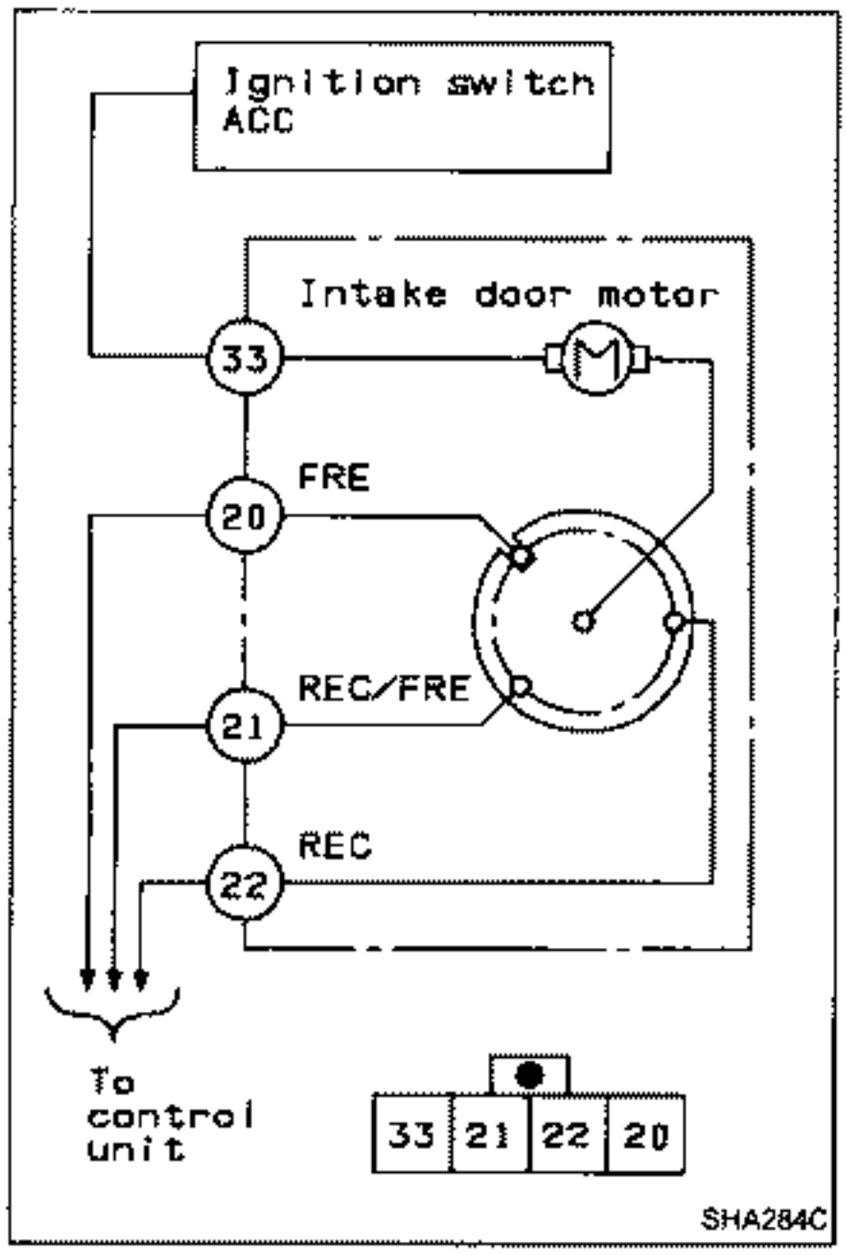

Acceleration Cut System

This system is controlled by the E.C.C.S. control unit.
When the engine is heavily overloaded, the compressor is turned off for several seconds to reduce overloading.

Water Cock Control System

The water cock is connected to the air mix doors with a cable. When the air mix doors are at the full-cold position, the water cock is fully closed, and when the air mix doors are at the full-hot position, the water cock is fully opened.

Refrigeration Cycle

REFRIGERANT FLOW

The refrigerant flows in the standard pattern, that is, through the compressor, the condenser, the receiver drier, through the evaporator, and back to the compressor.
Refrigerant evaporation through the evaporator coil is controlled by an externally equalized expansion valve, located inside the evaporator case.

FREEZE PROTECTION (For manual air conditioner)

The compressor cycles on and off to maintain the evaporator temperature within a specified range. When the evaporator coil temperature falls below a specified point, the thermo control amplifier interrupts the compressor operation. When the evaporator coil temperature rises above the specified point, the thermo control amplifier allows compressor operation.

FREEZE PROTECTION (For auto air conditioner)

When the A/C is switched on, the compressor runs continuously, and the evaporator pressure is controlled by a suction throttle valve (S.T.V.) to prevent freeze up.

REFRIGERANT SYSTEM PROTECTION

Low-pressure switch

The refrigerant system is protected against excessively low pressures by the low-pressure switch, located on the receiver drier. If the system pressure falls below the specifications, the low-pressure switch opens to interrupt compressor operation.

Fusible plug

Opens at temperature above 105°C (221°F), thereby discharging refrigerant to the atmosphere. If this plug is melted and opened, check the refrigerant line and replace the receiver drier.

Pressure relief valve

The refrigerant system is also protected by a pressure relief valve, located on the end of the high pressure flexible hose near the compressor. When the pressure of refrigerant in the system increases to an abnormal level [more than 3,727 kPa (37.3 bar, 38 kg/cm^2, 540 psi)], the release port on the pressure relief valve automatically opens and releases refrigerant into the atmosphere.

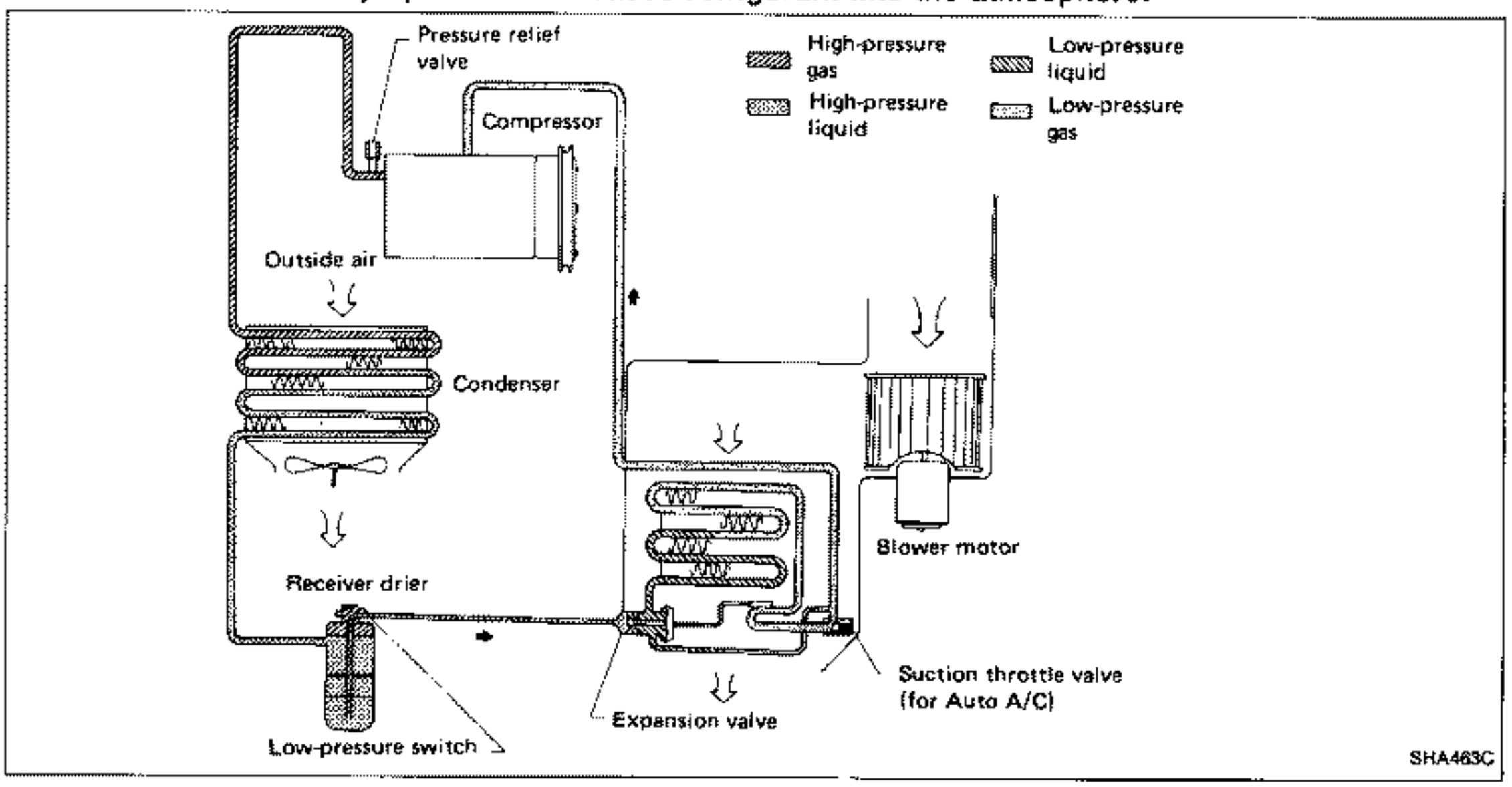

Refrigerant Lines

FOR AUSTRALIA

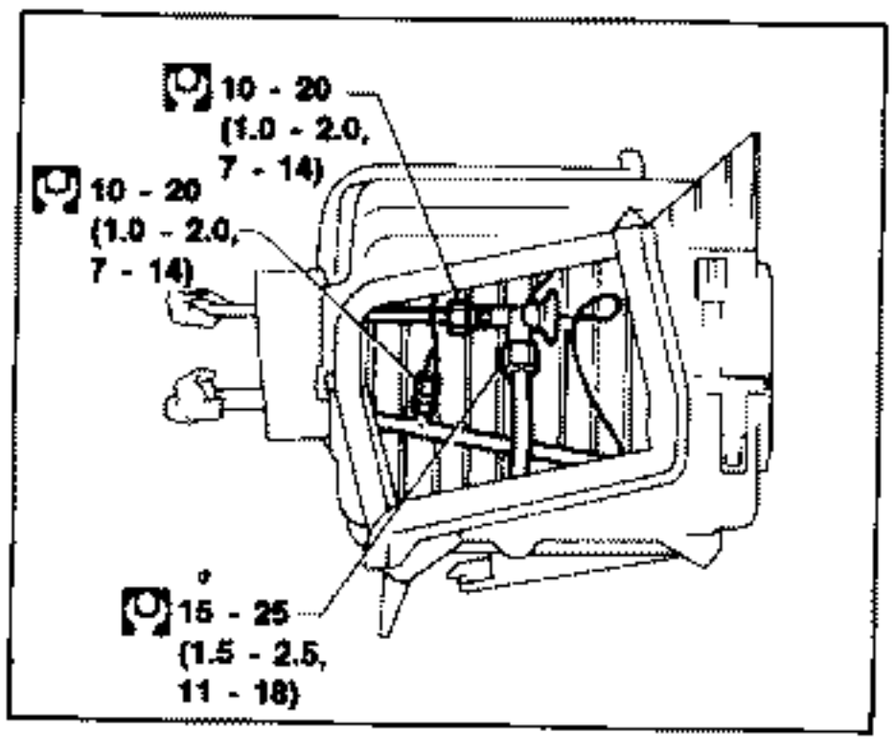

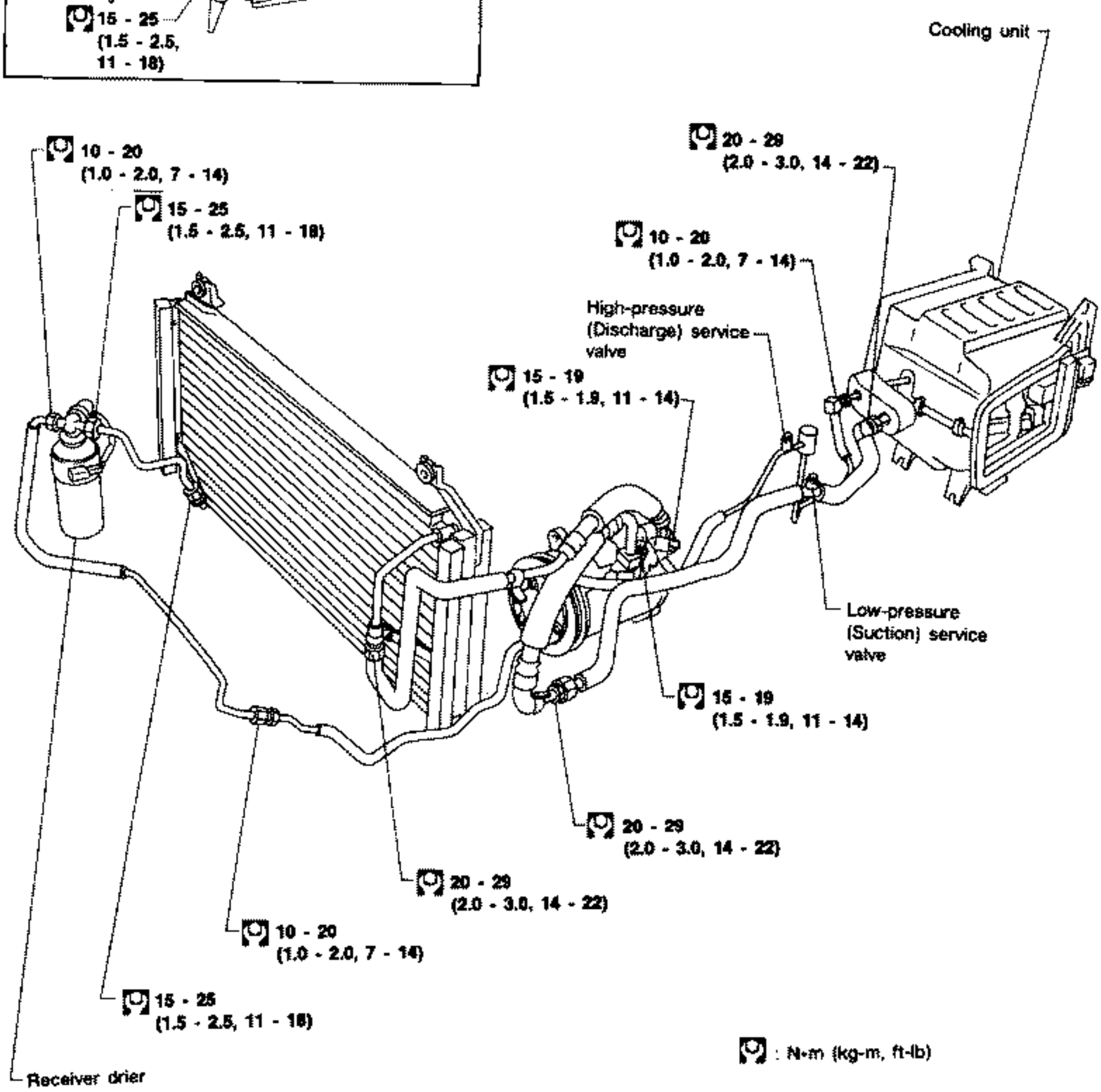

: N•m (kg-m, ft-lb)

SHA613C

Refrigerant Lines (Cont'd)

L.H.D. MODEL FOR EUROPE

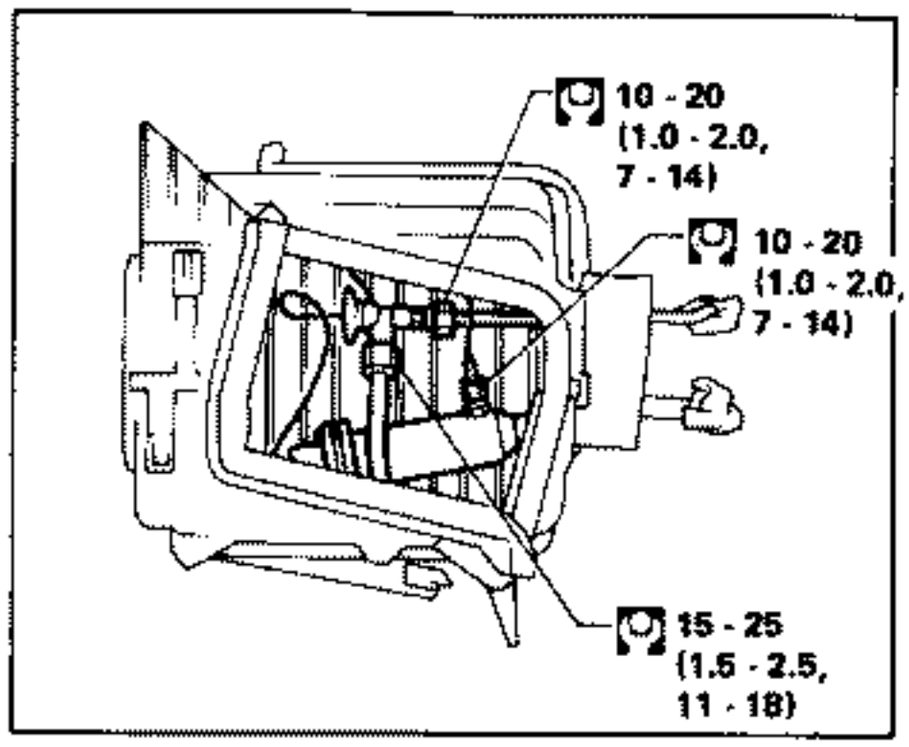

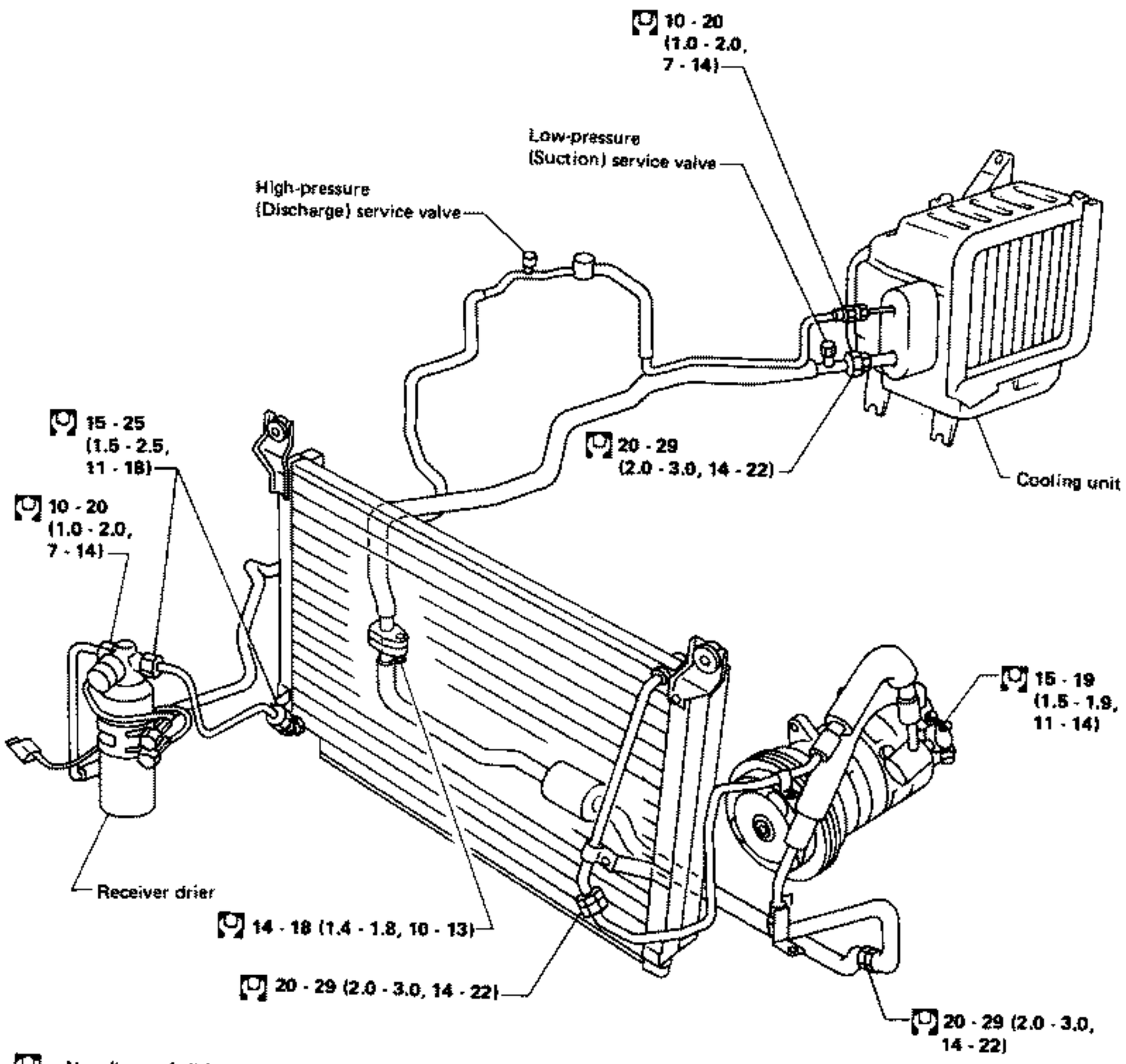

: N·m (kg-m, ft-lb)

SHA527C

Refrigerant Lines (Cont'd)

R.H.D. MODEL FOR EUROPE

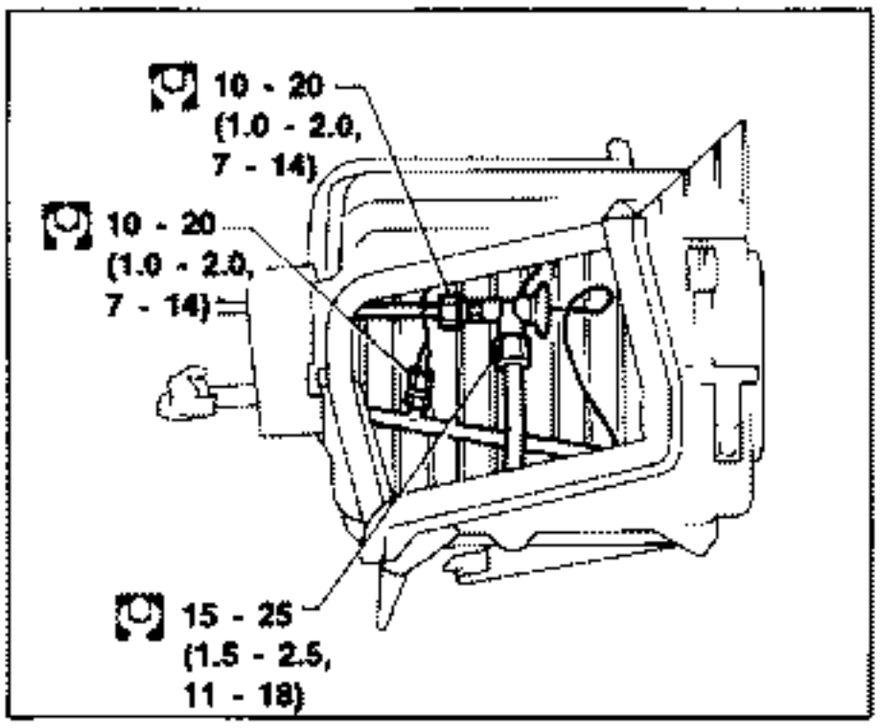

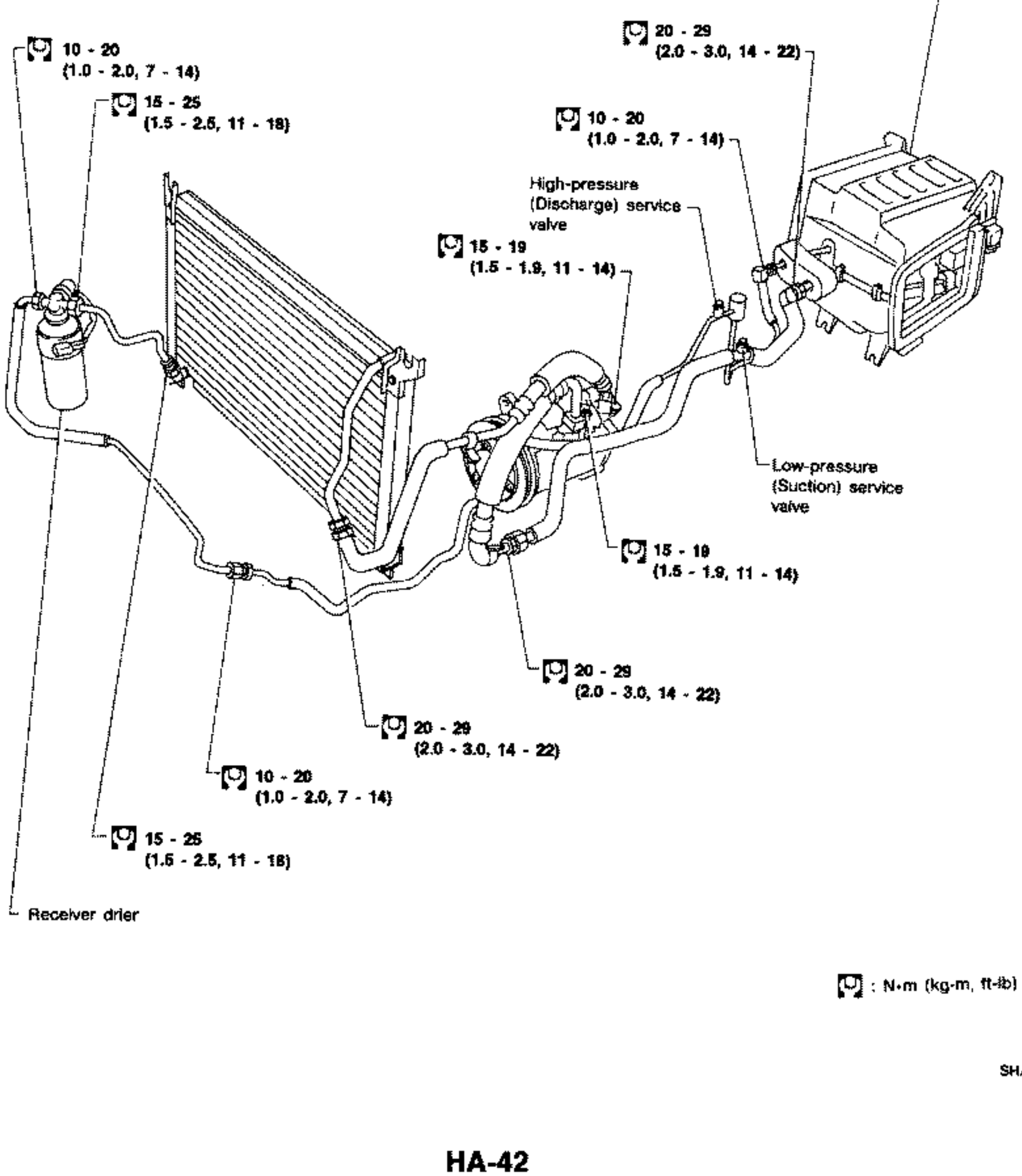

: N·m (kg-m, ft-lb)

SHA718C

Compressor Mounting

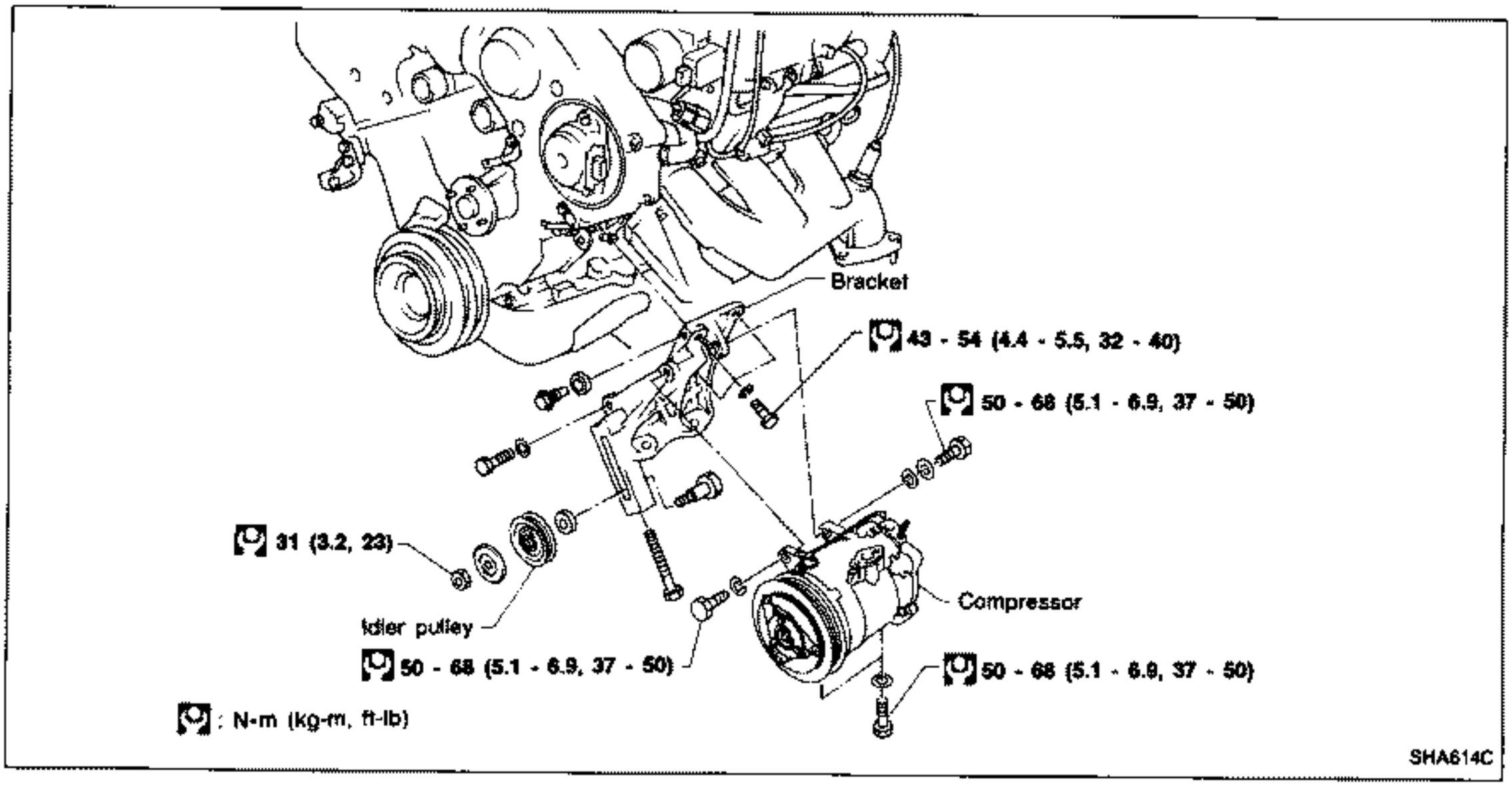

Belt Tension

- Refer to section MA.

Fast Idle Control Device (F.I.C.D.)

- Refer to section EF & EC.

Performance Chart

TEST CONDITION — For Manual Air Conditioner

Testing must be performed as follows:

Vehicle location: Indoors or in the shade (in a well ventilated place)
Doors: Closed
Door windows: Open
Hood: Open
TEMP. lever position: Max. COLD
Mode switch: (Ventilation) set
REC switch: (Recirculation) set
FAN lever position: Max. position
Engine speed: 1,500 rpm
Time required before starting testing after air conditioner starts operating: More than 10 minutes

TEST READING

For Australia

Recirculating-to-discharge air temperature table

Inside air (Recirculating air) at blower assembly inlet		Discharge air temperature at center ventilator °C (°F)
Relative humidity %	Air temperature °C (°F)	
50 - 60	20 (68)	6.5 - 7.2 (44 - 45)
	25 (77)	11.0 - 12.0 (52 - 54)
	30 (86)	15.6 - 16.8 (60 - 62)
	35 (95)	20.3 - 21.6 (69 - 71)
60 - 70	20 (68)	7.2 - 7.9 (45 - 46)
	25 (77)	12.0 - 12.9 (54 - 55)
	30 (86)	16.8 - 17.9 (62 - 64)
	35 (95)	21.6 - 22.9 (71 - 73)

Ambient air temperature-to-compressor pressure table

Ambient air		High-pressure (Discharge side) kPa (bar, kg/cm², psi)	Low-pressure (Suction side) kPa (bar, kg/cm², psi)
Relative humidity %	Air temperature °C (°F)		
50 - 70	20 (68)	1,079 - 1,324 (10.79 - 13.24, 11.0 - 13.5, 156 - 192)	105.9 - 129.5 (1.059 - 1.295, 1.08 - 1.32, 15.4 - 18.8)
	25 (77)	1,196 - 1,461 (11.96 - 14.61, 12.2 - 14.9, 173 - 212)	146.1 - 178.5 (1.461 - 1.785, 1.49 - 1.82, 21.2 - 25.9)
	30 (86)	1,373 - 1,687 (13.73 - 16.87, 14.0 - 17.2, 199 - 245)	187.3 - 228.5 (1.873 - 2.285, 1.91 - 2.33, 27.2 - 33.1)
	35 (95)	1,589 - 1,942 (15.89 - 19.02, 16.2 - 19.8, 230 - 282)	229.5 - 280.5 (2.295 - 2.805, 2.34 - 2.86, 33.3 - 40.7)
	40 (104)	1,804 - 2,197 (18.04 - 21.97, 18.4 - 22.4, 262 - 319)	269.7 - 329.5 (2.697 - 3.295, 2.75 - 3.36, 39.1 - 47.8)
	45 (113)	1,991 - 2,442 (19.91 - 24.42, 20.3 - 24.9, 289 - 354)	308.9 - 377.6 (3.089 - 3.776, 3.15 - 3.85, 44.8 - 54.7)

Performance Chart (Cont'd)

TEST CONDITION — For Auto Air Conditioner

Testing must be performed as follows:

Vehicle location: Indoors or in the shade (in a well ventilated place)
Doors: Closed
Door windows: Open
Hood: Open

Set up ACTIVE-TEST with CONSULT and set each component as follows:
Mode door: VENT
Intake door: REC
Air mix door: Full-cold
Compressor: ON
Blower motor: 12V

Set up self-diagnosis STEP 2 and set code No. "66".

Performance Chart (Cont'd)

VG30DETT engine L.H.D. model

Recirculating-to-discharge air temperature table

Inside air (Recirculating air) at blower assembly inlet		Discharge air temperature at center ventilator °C (°F)
Relative humidity %	Air temperature °C (°F)	
50 - 60	20 (68)	7.0 - 7.8 (45 - 46)
	25 (77)	11.6 - 12.7 (53 - 55)
	30 (86)	16.5 - 17.7 (62 - 64)
	35 (95)	21.3 - 22.7 (70 - 73)
	40 (104)	26.2 - 27.8 (79 - 82)
60 - 70	20 (68)	7.8 - 8.7 (46 - 48)
	25 (77)	12.7 - 13.8 (55 - 57)
	30 (86)	17.7 - 18.9 (64 - 66)
	35 (95)	22.7 - 24.1 (73 - 75)
	40 (104)	27.8 - 29.6 (82 - 85)

Ambient air temperature-to-compressor pressure table

Ambient air		High-pressure (Discharge side) kPa (bar, kg/cm^2, psi)	Low-pressure (Suction side) kPa (bar, kg/cm^2, psi)
Relative humidity %	Air temperature °C (°F)		
50 - 70	20 (68)	785 - 961 (7.85 - 9.61, 8.0 - 9.8, 114 - 139)	68.6 - 103.0 (0.686 - 1.030, 0.70 - 1.05, 10.0 - 14.9)
	25 (77)	912 - 1,108 (9.12 - 11.08, 9.3 - 11.3, 132 - 161)	118.7 - 150.0 (1.187 - 1.500, 1.21 - 1.53, 17.2 - 21.8)
	30 (86)	1,128 - 1,383 (11.28 - 13.83, 11.5 - 14.1, 164 - 201)	167.7 - 205.0 (1.677 - 2.050, 1.71 - 2.09, 24.3 - 29.7)
	35 (95)	1,353 - 1,657 (13.53 - 16.57, 13.8 - 16.9, 196 - 240)	213.8 - 260.9 (2.138 - 2.609, 2.18 - 2.66, 31.0 - 37.8)
	40 (104)	1,579 - 1,922 (15.79 - 19.22, 16.1 - 19.6, 229 - 279)	258.9 - 315.8 (2.589 - 3.158, 2.64 - 3.22, 37.5 - 45.8)
	45 (113)	1,795 - 2,207 (17.95 - 22.07, 18.3 - 22.5, 260 - 320)	304.0 - 372.7 (3.040 - 3.727, 3.10 - 3.80, 44.1 - 54.0)

Performance Chart (Cont'd)

VG30DETT ENGINE R.H.D. MODEL

Recirculating-to-discharge air temperature table

Inside air (Recirculating air) at blower assembly inlet		Discharge air temperature at center ventilator °C (°F)
Relative humidity %	Air temperature °C (°F)	
50 - 60	20 (68)	7.0 - 7.8 (45 - 46)
	25 (77)	10.2 - 11.4 (50 - 53)
	30 (86)	15.2 - 16.5 (59 - 62)
	35 (95)	20.4 - 21.5 (69 - 71)
	40 (104)	25.4 - 26.7 (78 - 80)
60 - 70	20 (68)	7.8 - 8.6 (46 - 47)
	25 (77)	11.4 - 12.4 (53 - 54)
	30 (86)	16.5 - 17.6 (62 - 64)
	35 (95)	21.5 - 22.8 (71 - 73)
	40 (104)	26.7 - 28.0 (80 - 82)

Ambient air temperature-to-compressor pressure table

Ambient air		High-pressure (Discharge side) kPa (bar, kg/cm^2, psi)	Low-pressure (Suction side) kPa (bar, kg/cm^2, psi)
Relative humidity %	Air temperature °C (°F)		
50 - 70	20 (68)	1,098 - 1,353 (10.98 - 13.53, 11.2 - 13.8, 159 - 196)	122.6 - 152.0 (1.226 - 1.520, 1.25 - 1.55, 17.8 - 22.0)
	25 (77)	1,265 - 1,559 (12.65 - 15.59, 12.9 - 15.9, 183 - 226)	156.9 - 194.2 (1.569 - 1.942, 1.60 - 1.98, 22.8 - 28.2)
	30 (86)	1,451 - 1,785 (14.51 - 17.85, 14.8 - 18.2, 210 - 259)	185.4 - 226.5 (1.854 - 2.265, 1.89 - 2.31, 26.9 - 32.8)
	35 (95)	1,608 - 1,981 (16.08 - 19.81, 16.4 - 20.2, 233 - 287)	220.7 - 269.7 (2.207 - 2.697, 2.25 - 2.75, 32.0 - 39.1)
	40 (104)	1,765 - 2,158 (17.65 - 21.58, 18.0 - 22.0, 256 - 313)	247.1 - 313.8 (2.471 - 3.138, 2.52 - 3.20, 35.8 - 45.5)
	45 (113)	1,942 - 2,373 (19.42 - 23.73, 19.8 - 24.2, 282 - 344)	274.6 - 362.9 (2.746 - 3.629, 2.80 - 3.70, 39.8 - 52.6)

Performance Test Diagnoses

Characteristics revealed by the manifold gauge readings for the air conditioning system are shown in the following table.
For how to do the performance test, refer to the item "Performance Chart".

In the following table, the portion marked on each gauge scale indicates the range which shows that the air conditioning system is in good order. This range is described in Performance Chart.

Condition	Probable cause	Corrective action
INSUFFICIENT REFRIGERANT CHARGE		
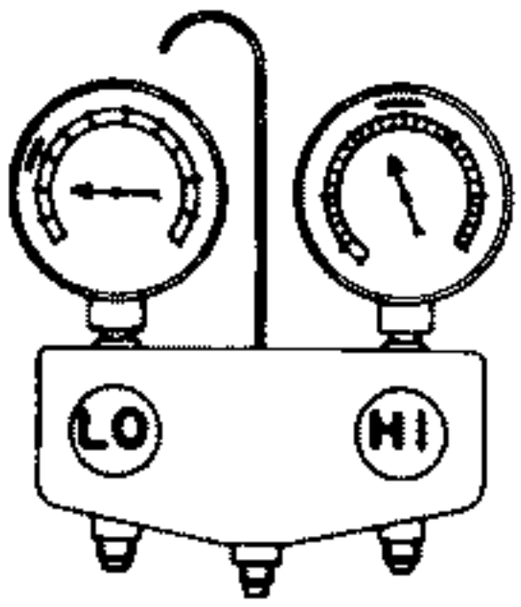 AC352A Insufficient cooling. Bubbles appear in sight glass.	Refrigerant is low, or leaking slightly.	1. Leak test. 2. Repair leak. 3. Charge system. **Evacuate, as necessary, and recharge system.**
ALMOST NO REFRIGERANT		
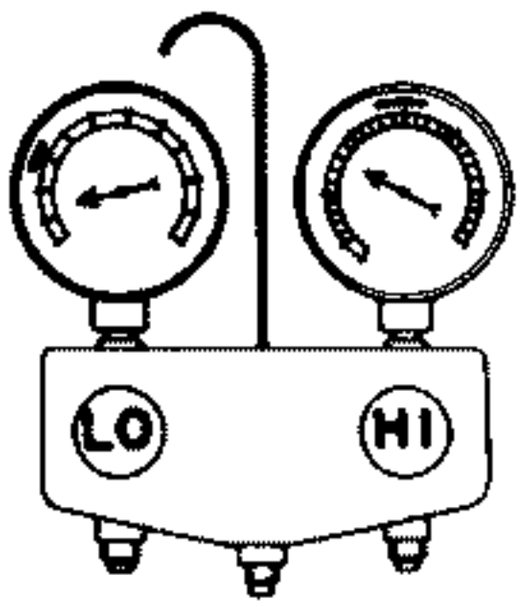 AC353A No cooling action. A lot of bubbles or something like mist appears in sight glass.	Serious refrigerant leak.	**Stop compressor immediately.** 1. Leak test. 2. Discharge system. 3. Repair leak(s). 4. Replace receiver drier if necessary. 5. Check oil level. 6. Evacuate and recharge system.
MALFUNCTIONING EXPANSION VALVE		
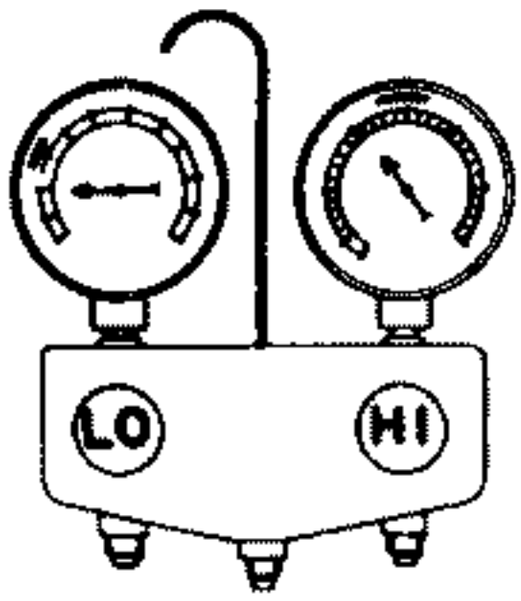 AC354A Slight cooling. Sweat or frosting on expansion valve inlet.	Expansion valve restricts refrigerant flow. • Expansion valve is clogged. • Expansion valve is inoperative. Valve stuck closed. Thermal bulb has lost charge.	If valve inlet reveals sweat or frost: 1. Discharge system. 2. Remove valve and clean it. Replace it if necessary. 3. Evacuate system. 4. Charge system. If valve does not operate: 1. Discharge system. 2. Replace valve. 3. Evacuate and charge system.

Performance Test Diagnoses (Cont'd)

Condition		Probable cause	Corrective action
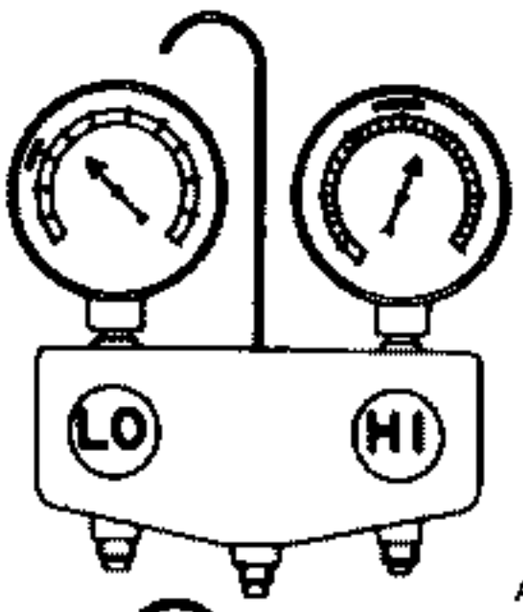 AC355A	Insufficient cooling. Sweat on suction line.	Expansion valve allows too much refrigerant through evaporator.	Check valve for operation. If suction side does not show a pressure decrease, replace valve.
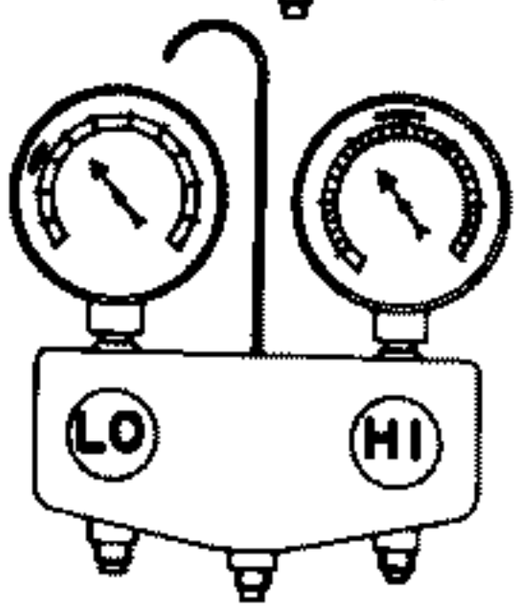 AC356A	No cooling. Sweat or frosting on suction line.	Malfunctioning expansion valve.	1. Discharge system. 2. Replace valve. 3. Evacuate and charge system.
MALFUNCTIONING SUCTION THROTTLE VALVE			
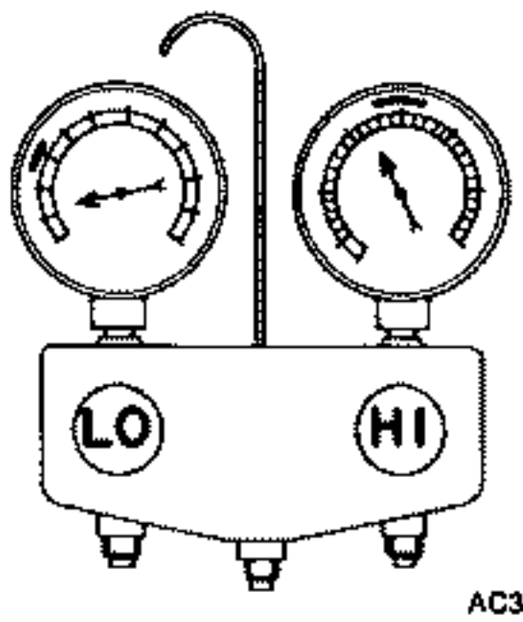 AC357A	Insufficient cooling. Frosted evaporator.	Suction throttle valve is inoperative.	1. Discharge system. 2. Replace valve. 3. Evacuate and charge system.
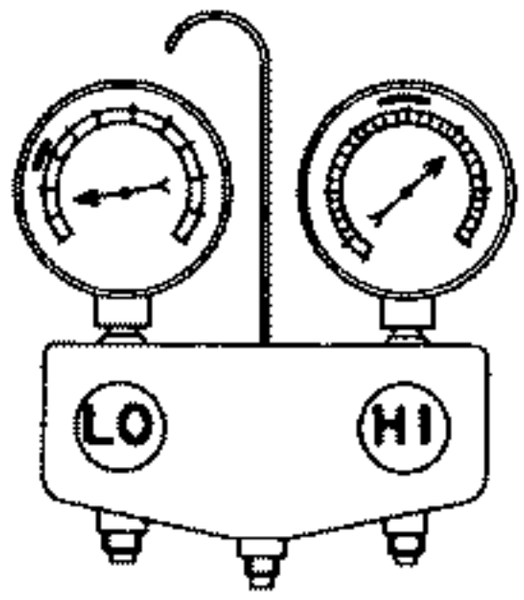 AC358A	Insufficient cooling.	Suction throttle valve restricts refrigerant flow.	1. Discharge system. 2. Replace valve. 3. Evacuate and charge system.

Performance Test Diagnoses (Cont'd)

Condition	Probable cause	Corrective action
MALFUNCTIONING CONDENSER 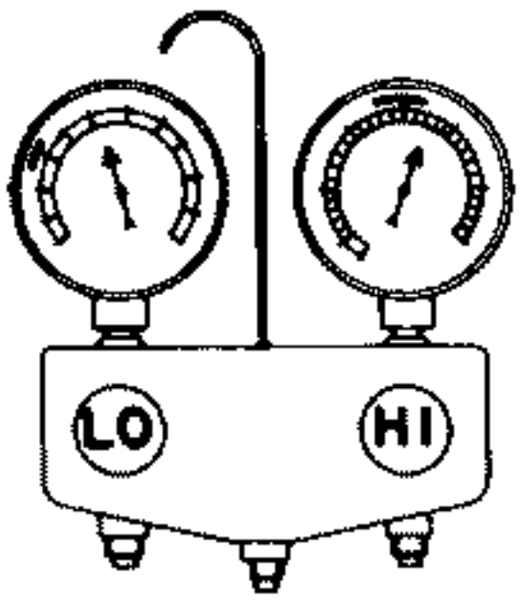 AC361A No cooling action: engine may overheat. Bubbles appear in sight glass of drier. Suction line is very hot.	Usually a malfunctioning condenser.	• Check fan belt and fluid coupling • Check radiator fan motor. • Check condenser for dirt accumulation. • Check engine cooling system for overheating. • Check for refrigerant overcharging. **If pressure remains high in spite of all above actions taken, remove and inspect the condenser for possible oil clogging.**
HIGH-PRESSURE LINE BLOCKED 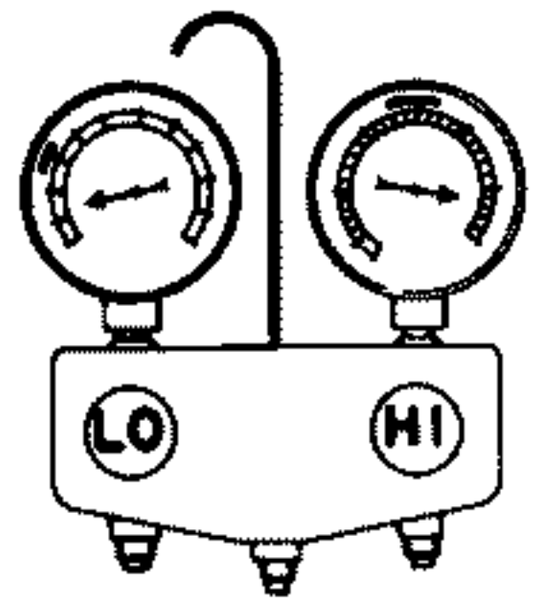 AC362A Insufficient cooling. Frosted high-pressure liquid line.	Drier clogged, or restriction in high-pressure line.	1. Discharge system. 2. Remove receiver drier or strainer and replace it. 3. Evacuate and charge system.
MALFUNCTIONING COMPRESSOR 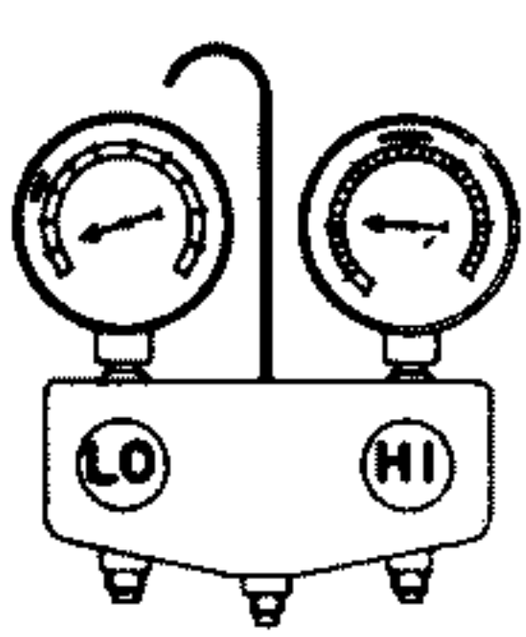 AC363A Insufficient cooling.	Internal problem in compressor, or damaged gasket and valve.	1. Discharge system. 2. Remove and check compressor. 3. Repair or replace compressor. 4. Check oil level. 5. Replace receiver drier. 6. Evacuate and charge system.

Performance Test Diagnoses (Cont'd)

Condition		Probable cause	Corrective action
TOO MUCH OIL IN SYSTEM (Excessive)			
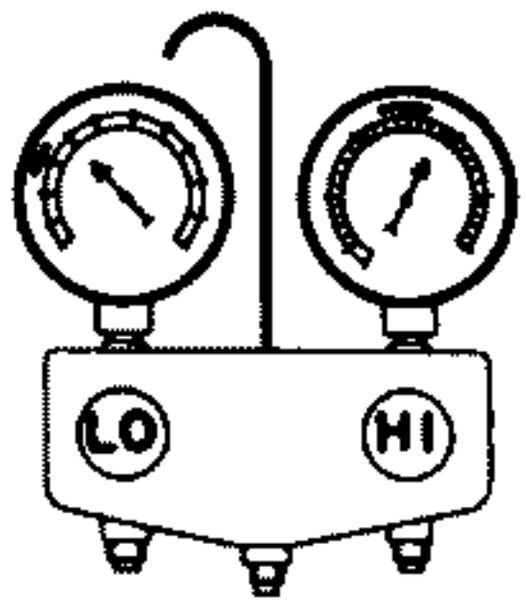 AC364A	Insufficient cooling.	Too much oil circulates with refrigerant, causing the cooling capacity of the system to be reduced.	Refer to COMPRESSOR OIL for correcting oil level.
AIR IN SYSTEM			
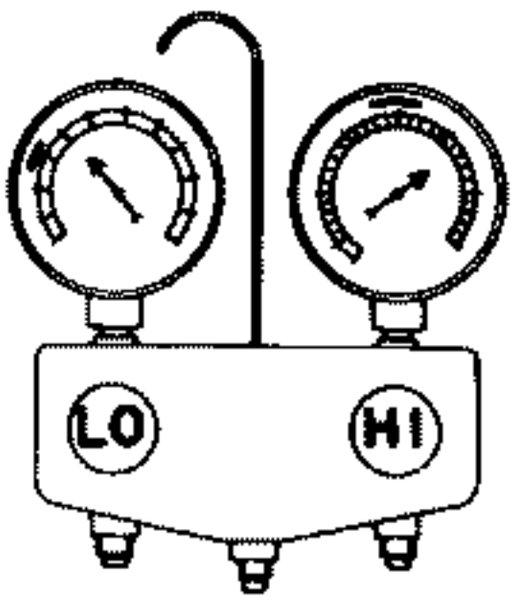 AC359A	Insufficient cooling. Sight glass shows occasional bubbles.	Air mixed with refrigerant in system.	1. Discharge system. 2. Replace receiver drier. 3. Evacuate and charge system.
MOISTURE IN SYSTEM			
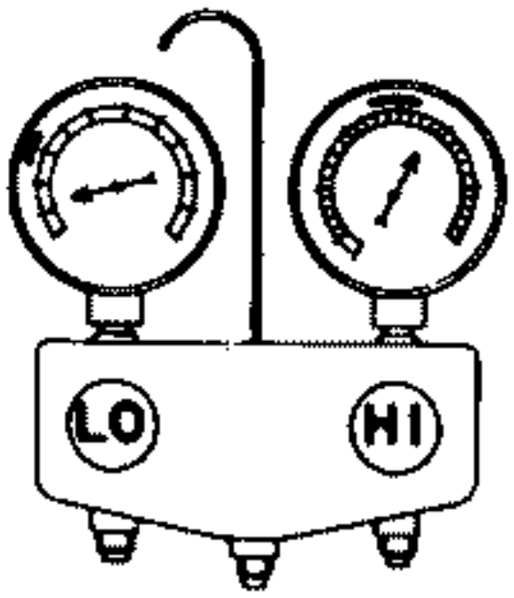 AC360A	After short operation, suction side may show vacuum pressure reading. During this condition, discharge air will be warm. As a warming of this, reading vibrates around 39 kPa (0.39 bar, 0.4 kg/cm^2, 6 psi).	Drier is saturated with moisture. Moisture has frozen in expansion valve. Refrigerant flow is restricted.	1. Discharge system. 2. Replace receiver drier (twice if necessary). 3. Evacuate system completely. (Repeat 30-minutes evacuating three times.) 4. Recharge system.

Checking and Adjusting

The oil used to lubricate the compressor is circulating with the refrigerant.
Whenever replacing any component of the system or a large amount of gas leakage occurs, add oil to maintain the original amount of oil.

Total amount of oil in the system:
150 mℓ (5.3 Imp fl oz)

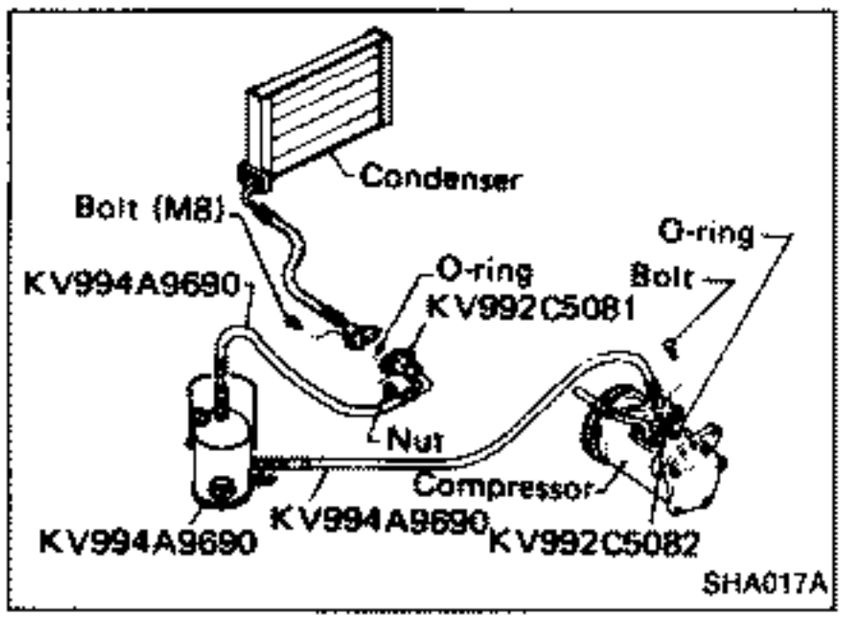

1. Connect oil separator KV994A9690 between compressor discharge side and condenser.
2. Evacuate and charge the system.
3. Operate compressor at engine idling with air conditioner set for maximum cooling and high fan speed.
4. Stop compressor operation after 10 minutes.

CAUTION:
Never allow engine speed to exceed idling speed.
Do not continue compressor operation for more than 10 minutes.

5. Disconnect oil separator and connect refrigerant line to original positions.
6. Disconnect low flexible hose from compressor suction valve.
7. Add new oil from compressor suction port.

Amount of oil to be added:
120 mℓ (4.2 Imp fl oz)

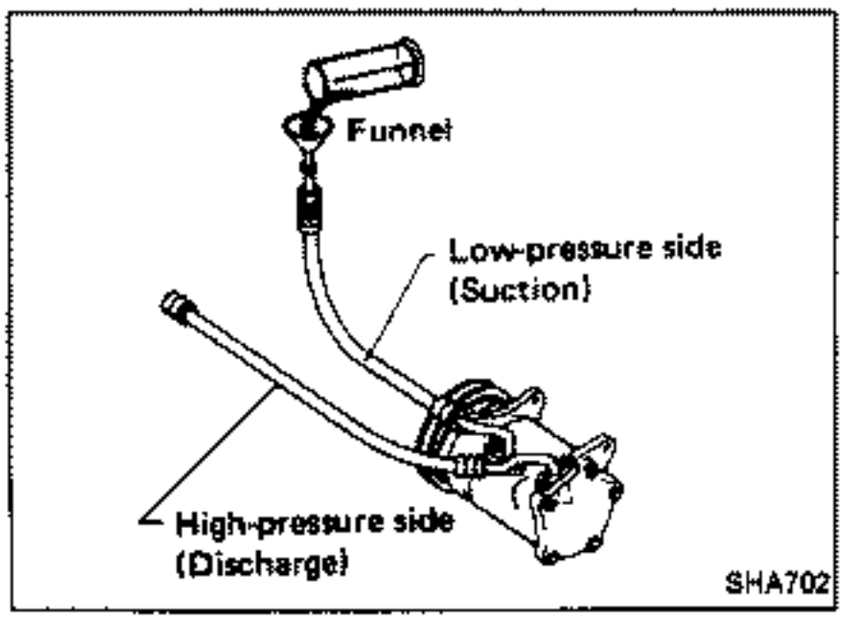

- **About 30 mℓ (1.1 Imp fl oz) of oil remains unremoved in the system.**

8. After adding oil, rotate compressor clutch by hand 5 to 10 turns.
9. Connect refrigerant line and evacuate and charge system.
10. Conduct leak test and performance test.
11. Gradually loosen drain cap of oil separator to release residual pressure. Remove cap and drain oil.
12. To prevent formation of rust and intrusion of moisture or dust, perform the following before placing oil separator kit into storage.

1) Cap each opening of flexible hose and double union securely.
2) Cap oil separator, evacuate it from service valve, and charge refrigerant.

When oil contains chips or other foreign material. After air conditioner system has been flushed with refrigerant replace receiver drier. Then pour in 150 mℓ (5.3 Imp fl oz) of oil into air conditioner system.

IF OIL SEPARATOR IS NOT AVAILABLE

Add oil accordance with the table below.

Condition		Amount of oil to be added mℓ(Imp fl oz)
Replacement of compressor		1. Remove all oil from new and old compressors.* 2. Charge new compressor with the same amount of oil as was in the old compressor.
Replacement of front cooling unit		70 (2.5)
Replacement of rear cooling unit		15 (0.5)
Replacement of cool box		10 (0.4)
Replacement of receiver drier (liquid tank)		10 (0.4)
Replacement of condenser	There is no sign of oil leakage from condenser.	10 (0.4)
	There are evidences of a large amount of oil leakage from condenser.	60 (2.1)
Replacement of flexible hose or pipe	There is no sign of oil leakage.	Oil need not be added.
	There are evidences of a large amount of oil leakage.	60 (2.1)
Gas leakage	There is no sign of oil leakage.	Oil need not be added.
	There are evidences of a large amount of oil leakage.	60 (2.1)

*: Remove compressor oil as follows.

1. With the compressor upside down, completely drain the oil through the suction port (from the embossed letter "s" mark side).
2. When the oil stops flowing out, rotate the clutch hub two or three times to completely drain the oil.

Precautions

- Plug all openings to prevent moisture and foreign matter from entering.
- Do not leave compressor on its side or upside down for more than 10 minutes.
- When replacing or repairing compressor, check compressor oil level in system.
- When replacing with a new compressor, drain specified oil from new compressor. Refer to COMPRESSOR OIL.
- Be sure there is no oil or dirt on frictional surface of clutch disc and pulley.
- When replacing compressor clutch, be careful not to scratch shaft or bend pulley.
- When replacing compressor clutch assembly, do not forget BREAK-IN OPERATION.
- When storing a compressor, be sure to fill it with refrigerant to prevent rust formation. Add refrigerant at the low-pressure side and purge air at the high-pressure side, while rotating shaft by hand.
- When installing shaft seal, O-ring and gaskets, apply compressor oil sparingly to the contact surface. Do not reuse them.
- After replacement or repairs, conduct a Leak Test.

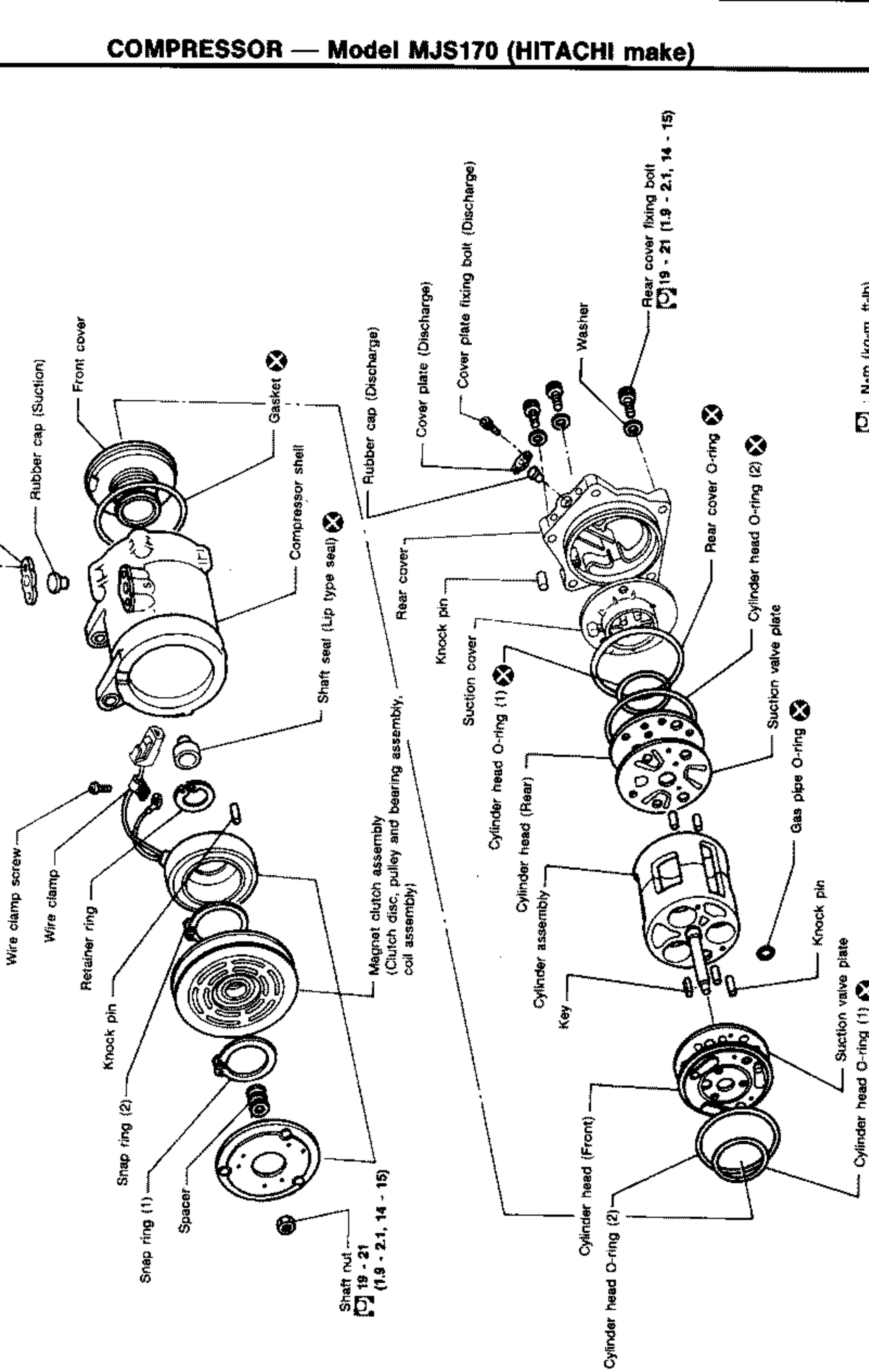
Cover plate fixing bolt (Suction)
Cover plate (Suction)
Rubber cap (Suction)
Front cover
Gasket
Compressor shell
Shaft seal (Lip type seal)
Rubber cap (Discharge)
Cover plate (Discharge)
Cover plate fixing bolt (Discharge)
Washer
Rear cover fixing bolt
19 - 21 (1.9 - 2.1, 14 - 15)
Rear cover
Knock pin
Suction cover
Rear cover O-ring
Cylinder head O-ring (2)
Cylinder head O-ring (1)
Suction valve plate
Wire clamp screw
Wire clamp
Retainer ring
Knock pin
Magnet clutch assembly (Clutch disc, pulley and bearing coil assembly)
Snap ring (2)
Snap ring (1)
Spacer
Shaft nut
19 - 21 (1.9 - 2.1, 14 - 15)
Cylinder head (Rear)
Cylinder assembly
Key
Gas pipe O-ring
Knock pin
Suction valve plate
Cylinder head O-ring (1)
Cylinder head (Front)
Cylinder head O-ring (2)
: N·m (kg-m, ft-lb)

SHA632C

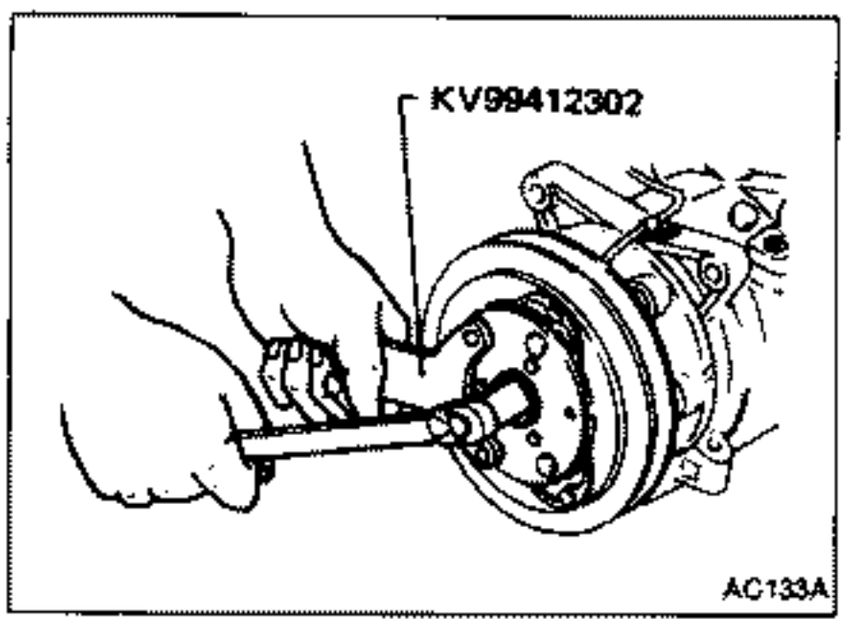

Compressor Clutch

REMOVAL

- When removing shaft nut, hold clutch disc with clutch disc wrench.

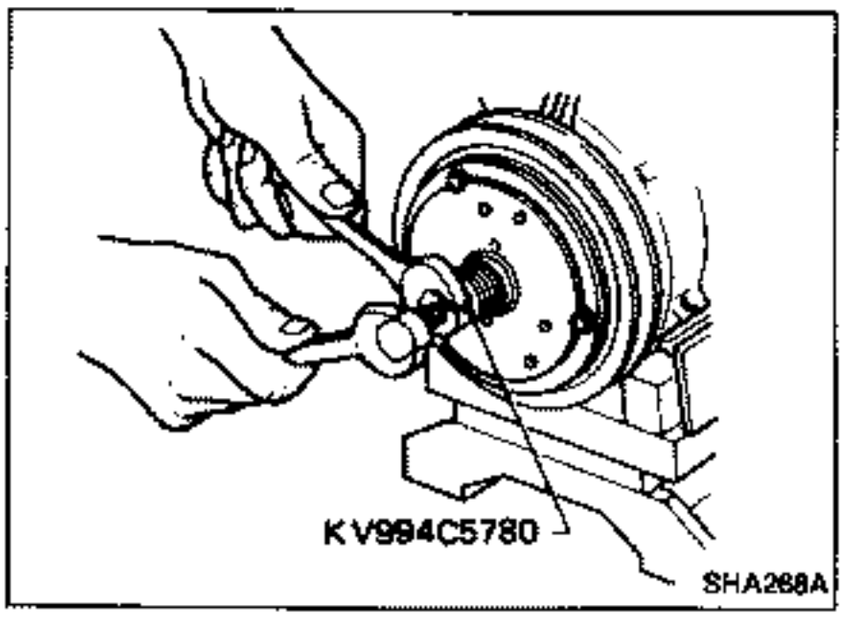

- Using clutch disc puller, clutch disc can be removed easily

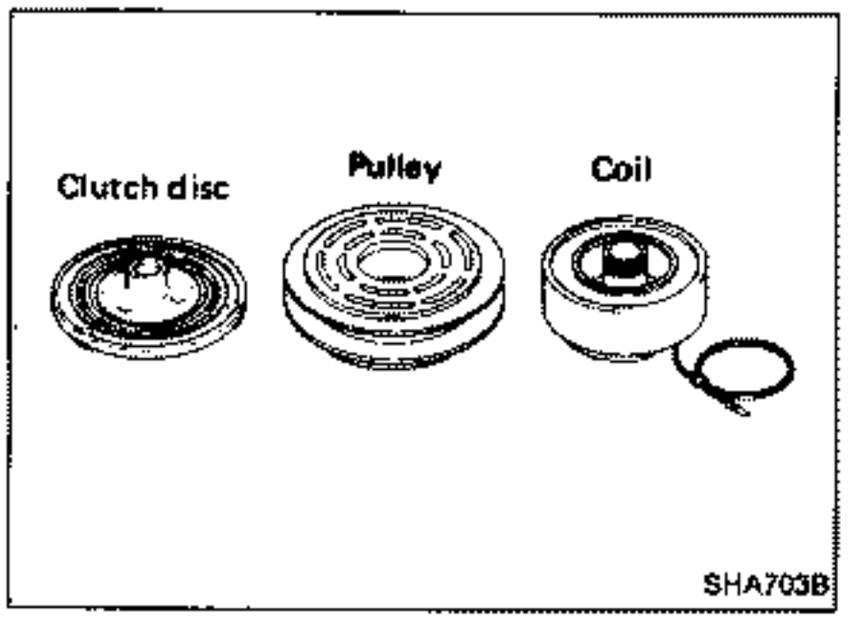

INSPECTION

Clutch disc

If the contact surface shows signs of damage due to excessive heat, the drive plate and pulley should be replaced.

Pulley

Check the appearance of the pulley assembly. If the contact surface of the pulley shows signs of excessive grooving due to slippage, both the pulley and drive plate should be replaced. The contact surfaces of the pulley assembly should be cleaned with a suitable solvent before reinstallation.

Coil

Check coil for loose connection or cracked insulation.

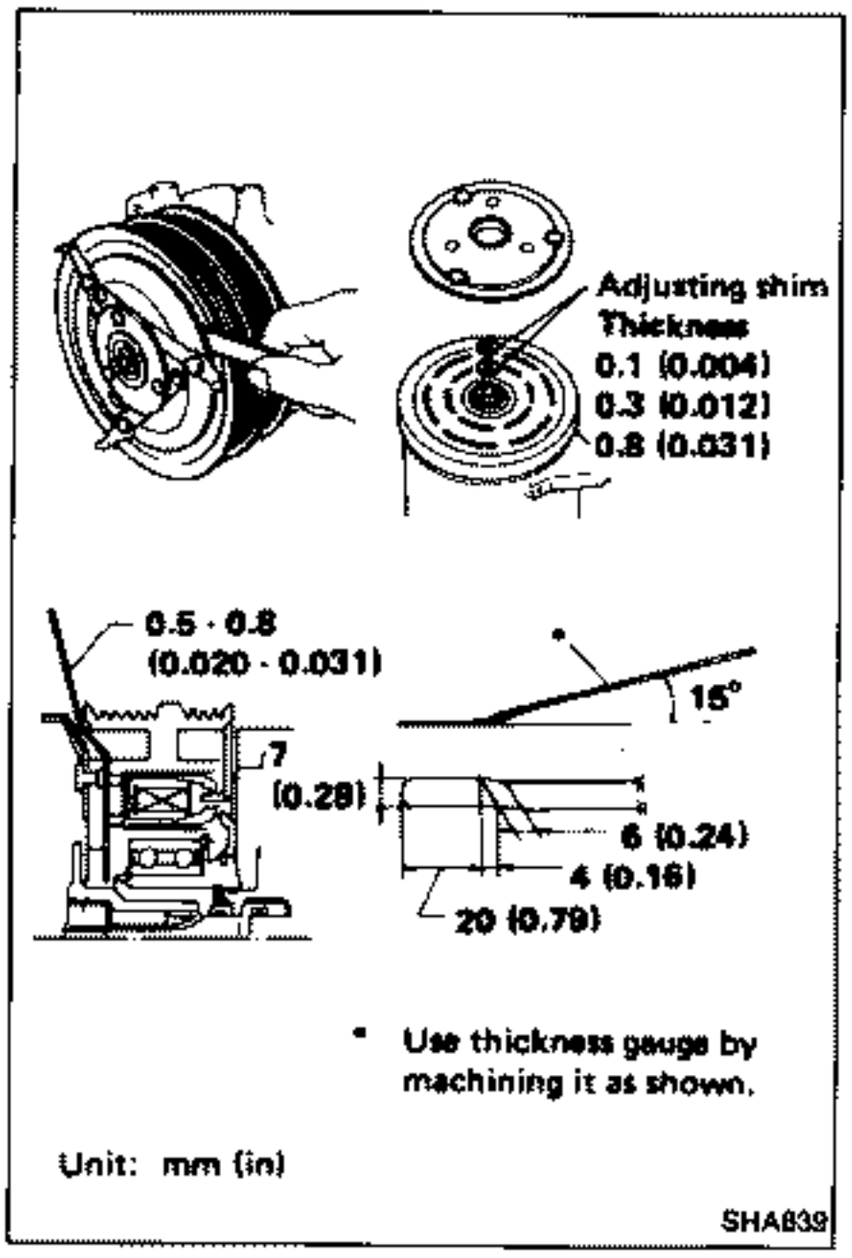

Compressor Clutch (Cont'd)

ADJUSTMENT

- When assembling clutch disc, adjust disc-to-pulley clearance with shims.

BREAK-IN OPERATION

When replacing compressor clutch assembly, do not forget break-in operation, accomplished by engaging and disengaging the clutch about thirty times. Break-in operation raises the level of transmitted torque.

Shaft Seal

REMOVAL

- Before disassembling, be sure to measure the amount of oil. After assembling, charge with the same amount of new oil.

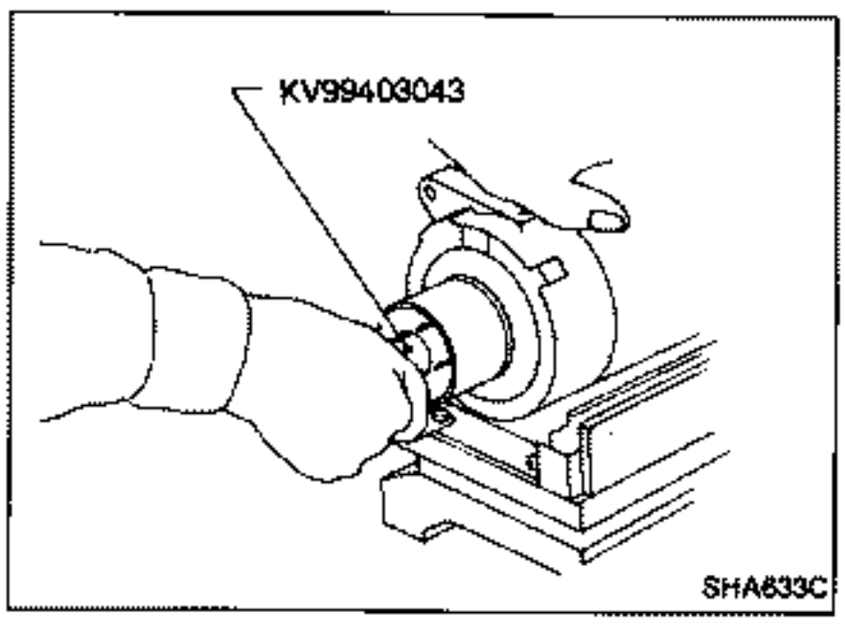

- With Tool KV99403043, remove shaft seal by hooking the pulling case.

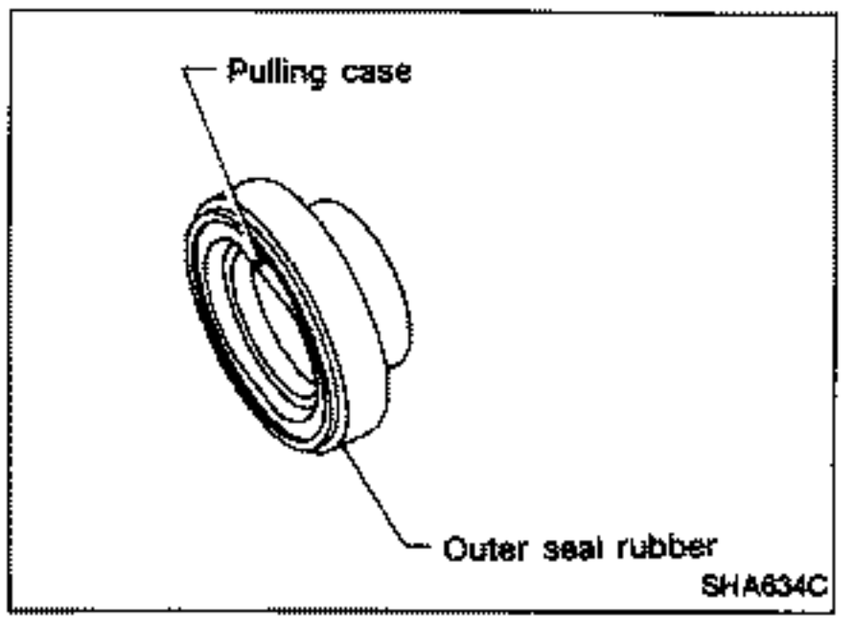

INSPECTION

- Check the outer seal rubber for scars and hardening.

Shaft Seal (Cont'd)

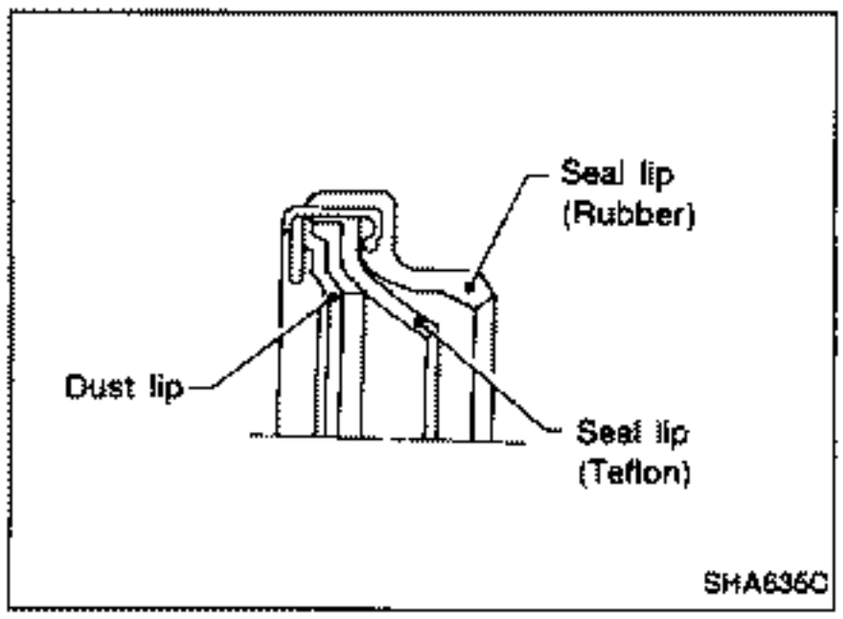

- Check the seal lips for scars and wear.

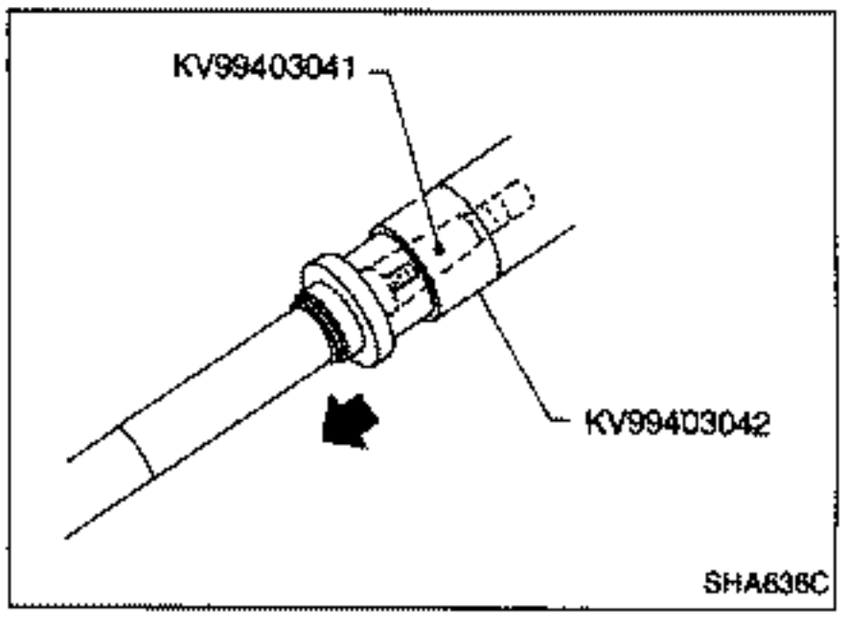

INSTALLATION

- When installing shaft seal;

1) Cap shaft seal pilot to the top end of compressor shaft.
2) Using shaft seal installer, insert shaft seal.

Cylinder Head, Valve and Cylinder

REMOVAL (Rear)

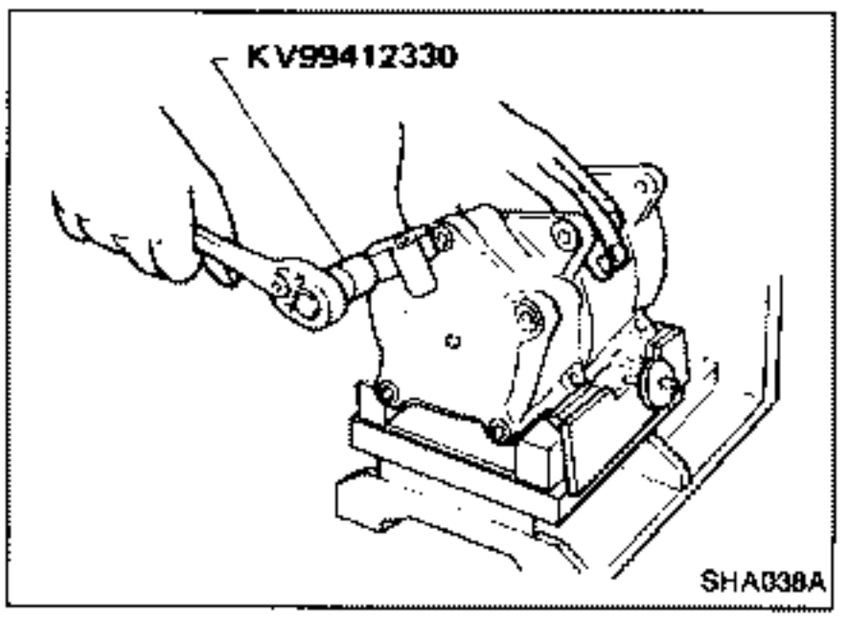

- Using Allen socket, remove rear cover.

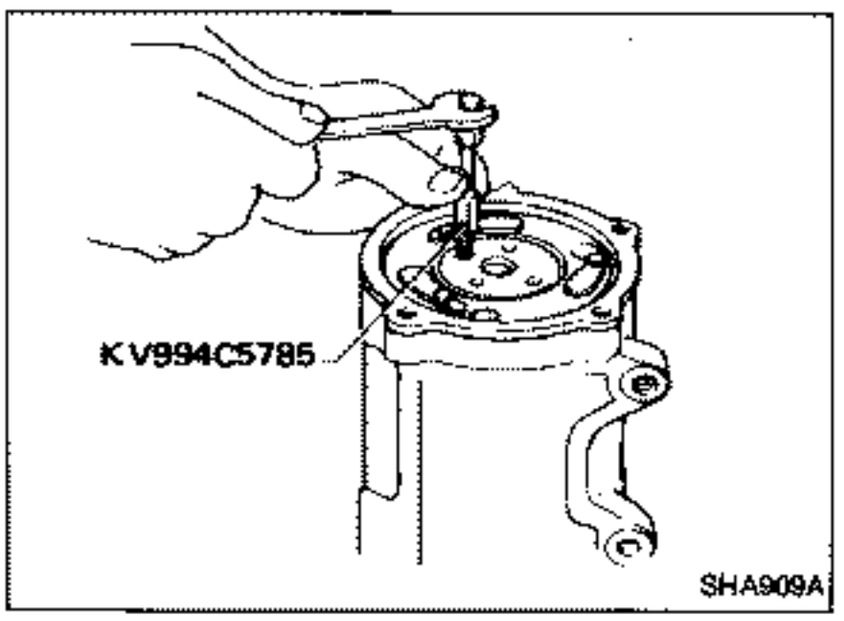

- Using cylinder head remover, remove rear cylinder head.

INSPECTION

- Check suction valve plate and cylinder head for sings of damage.

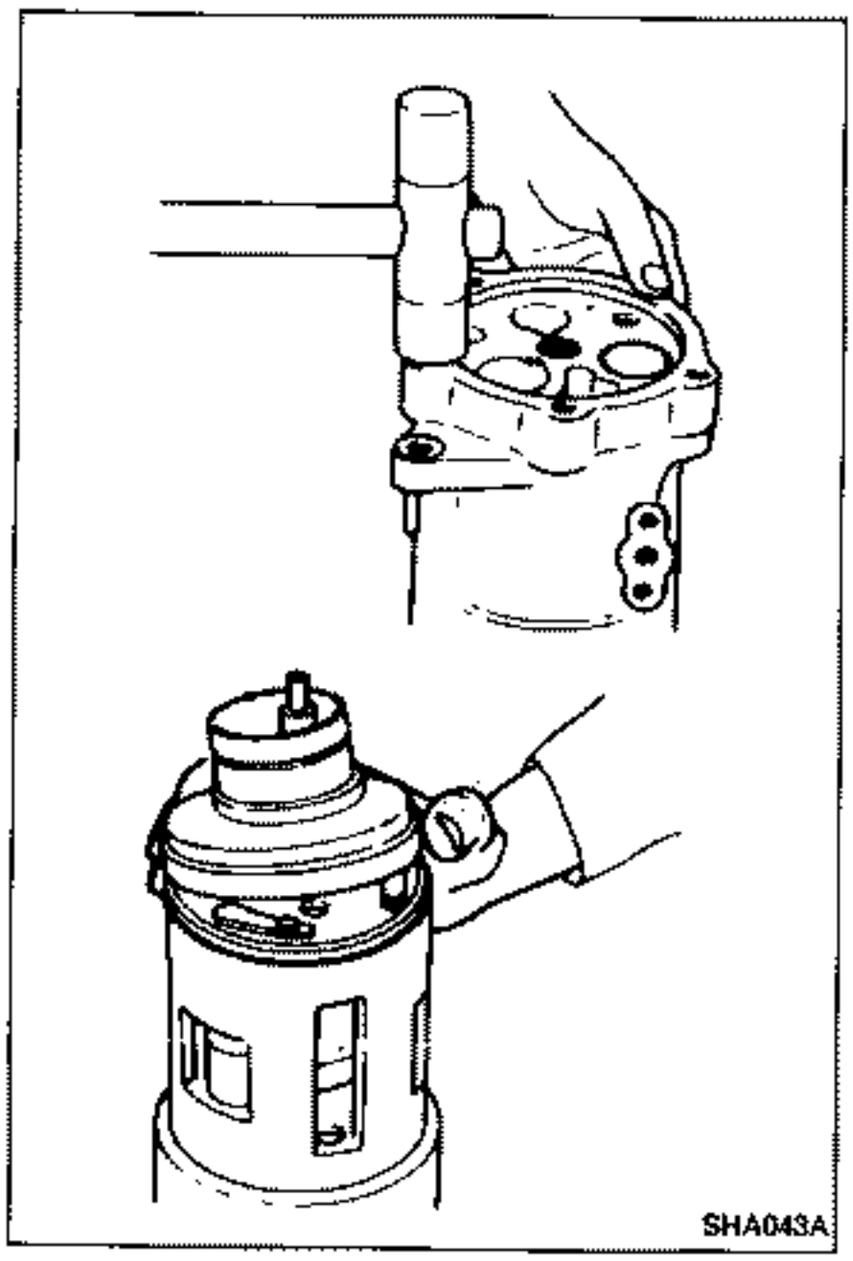

Cylinder Head, Valve and Cylinder (Cont'd)

REMOVAL (Front)

- With the front facing downward, support compressor shell. Using a plastic mallet, tap at the rear end of the shell flange, driving shell straight downward.
- Detach front cover from cylinder assembly.

INSPECTION

- Check suction valve plate and cylinder head for signs of damage.
- Check to make sure contact surfaces of cylinders, compressor shaft and compressor shell are free from any sign of scratches.

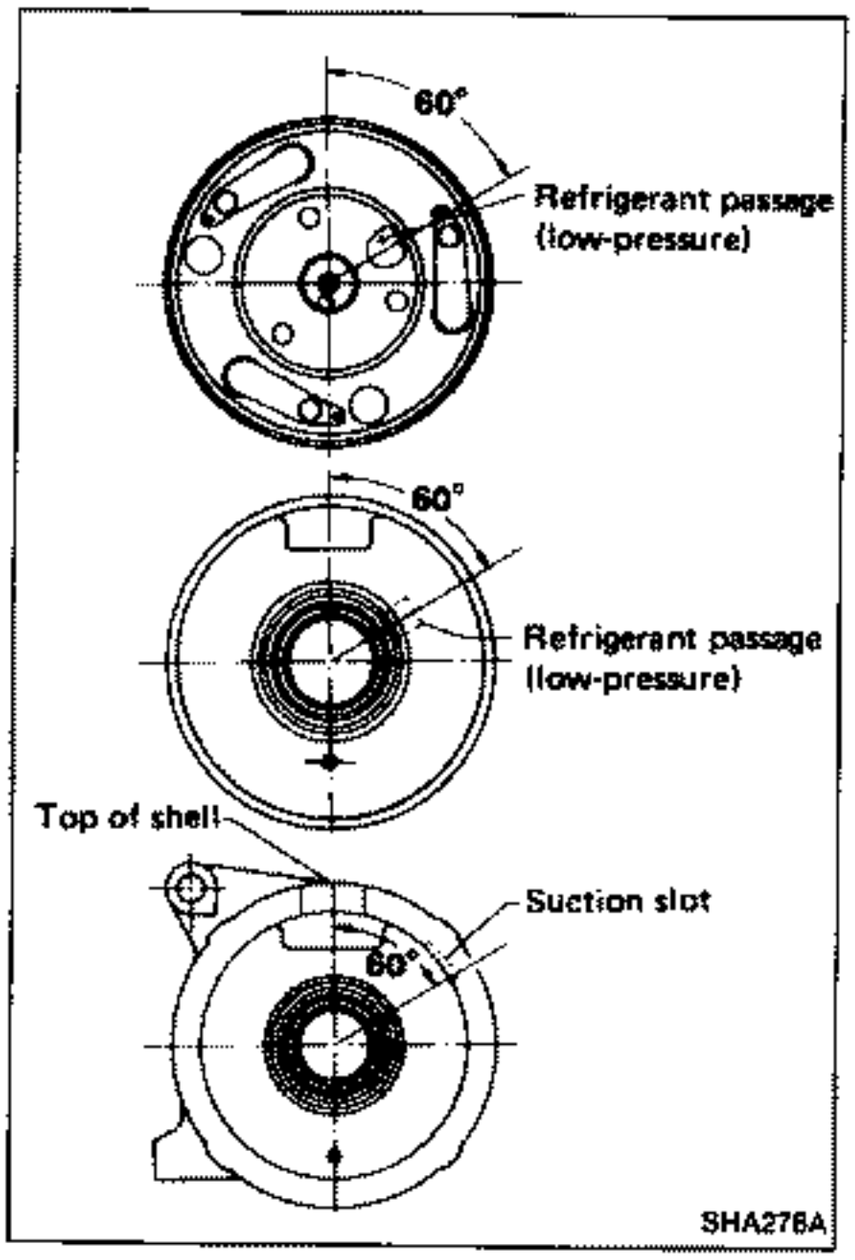

INSTALLATION

1. Front cover must be installed so that the cutout portions of front cover and shell are aligned.
   For this purpose, install front cover on cylinder head so that angle between threaded hole in front cover and low-pressure side refrigerant passage in cylinder head is about 60°.

Cylinder Head, Valve and Cylinder (Cont'd)

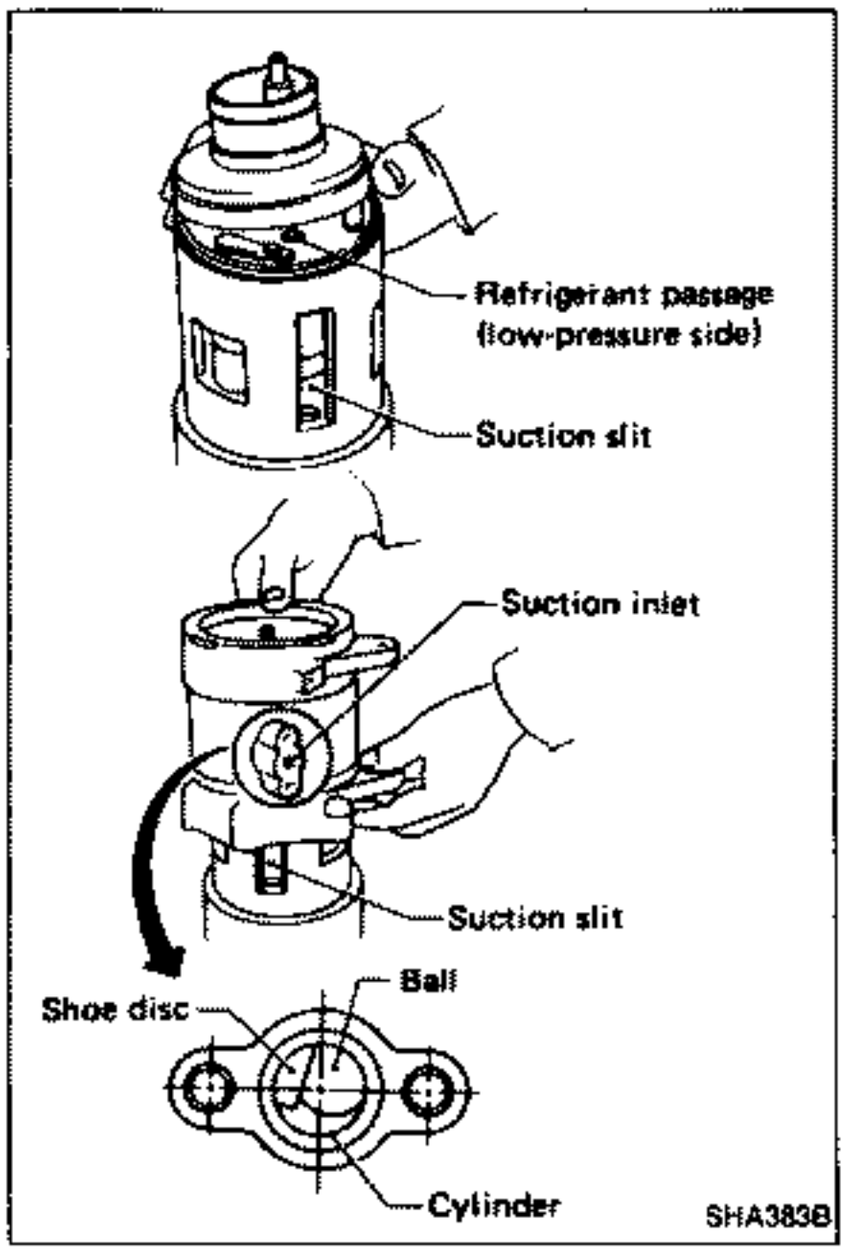

2. When installing shell on cylinder, adjust position of shell so that suction inlet of shell opens in the same direction as suction slit of cylinder visible in suction inlet by removing suction valve.

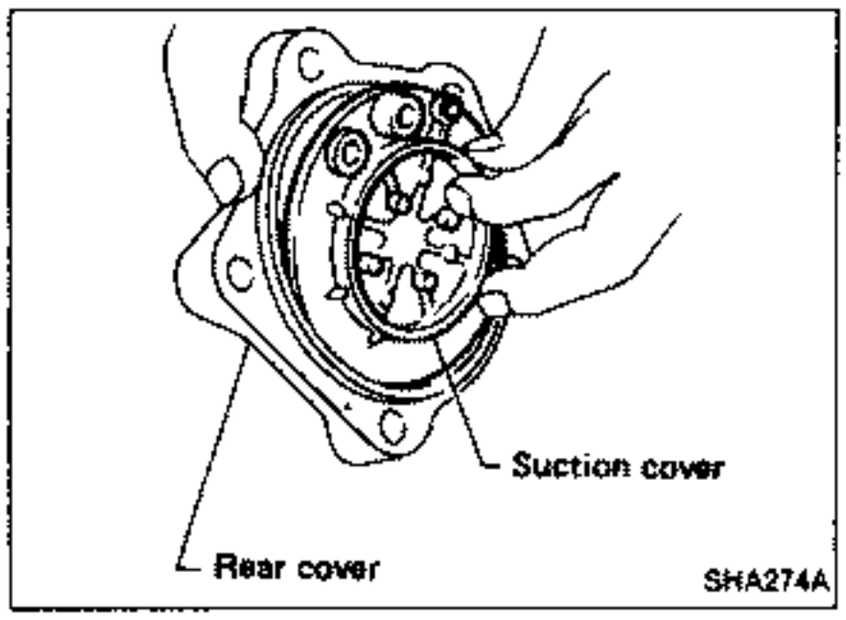

- When installing suction cover to rear cover, align knock pin.

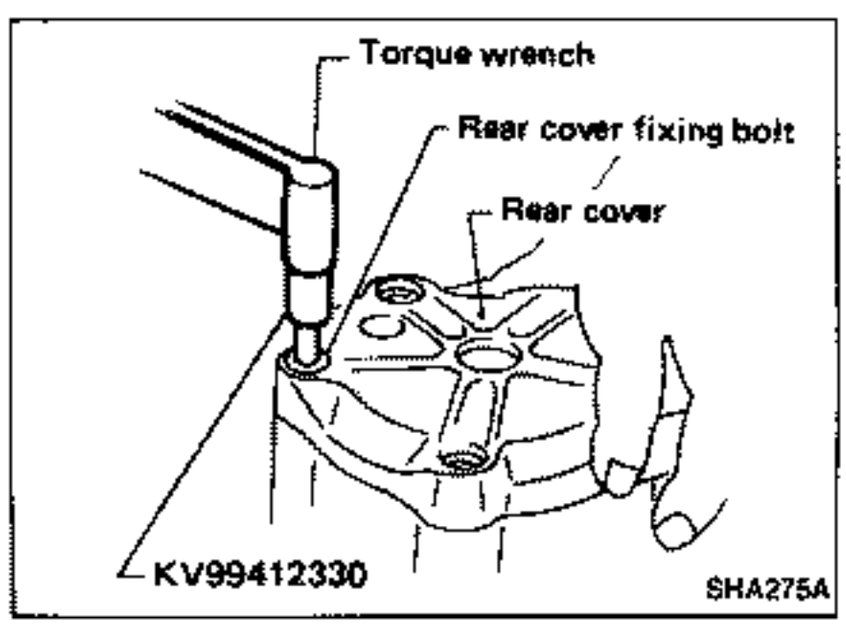

- Using Allen socket, install rear cover.

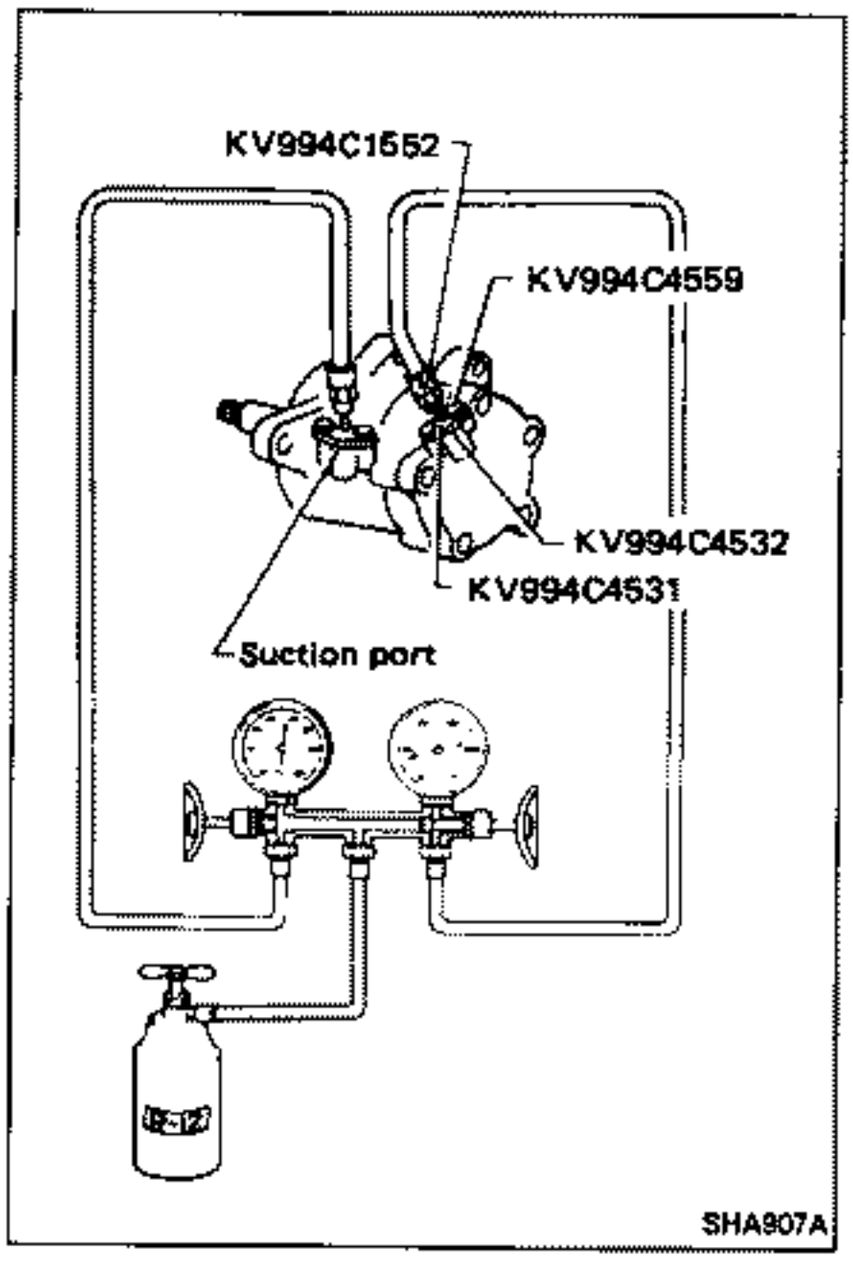

Leak Test

- Charge refrigerant from suction side and evacuate air from discharge side. Then conduct leak test.

Wiring Diagram

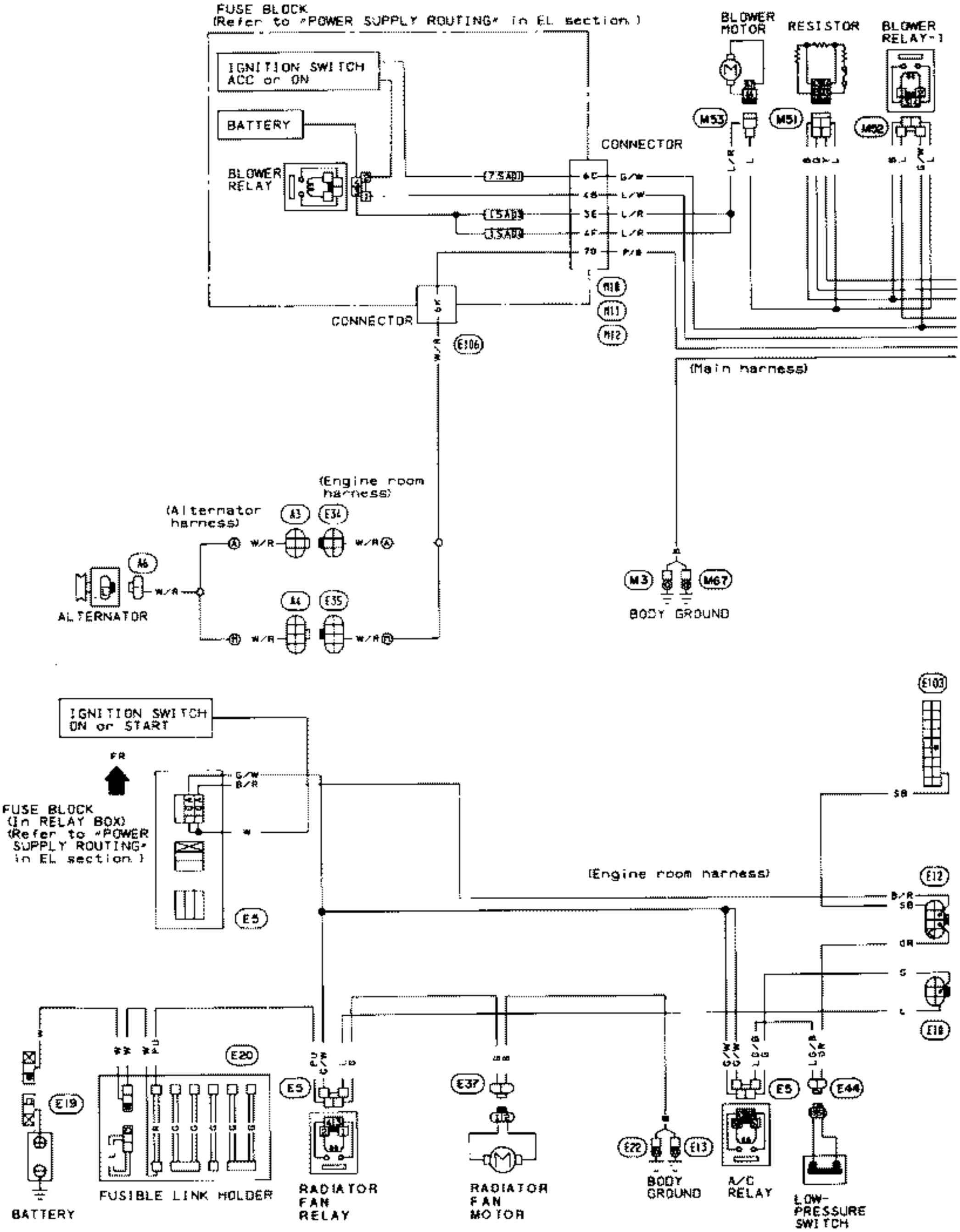

A/C ELECTRICAL CIRCUIT — Manual Air Conditioner

Wiring Diagram (Cont'd)

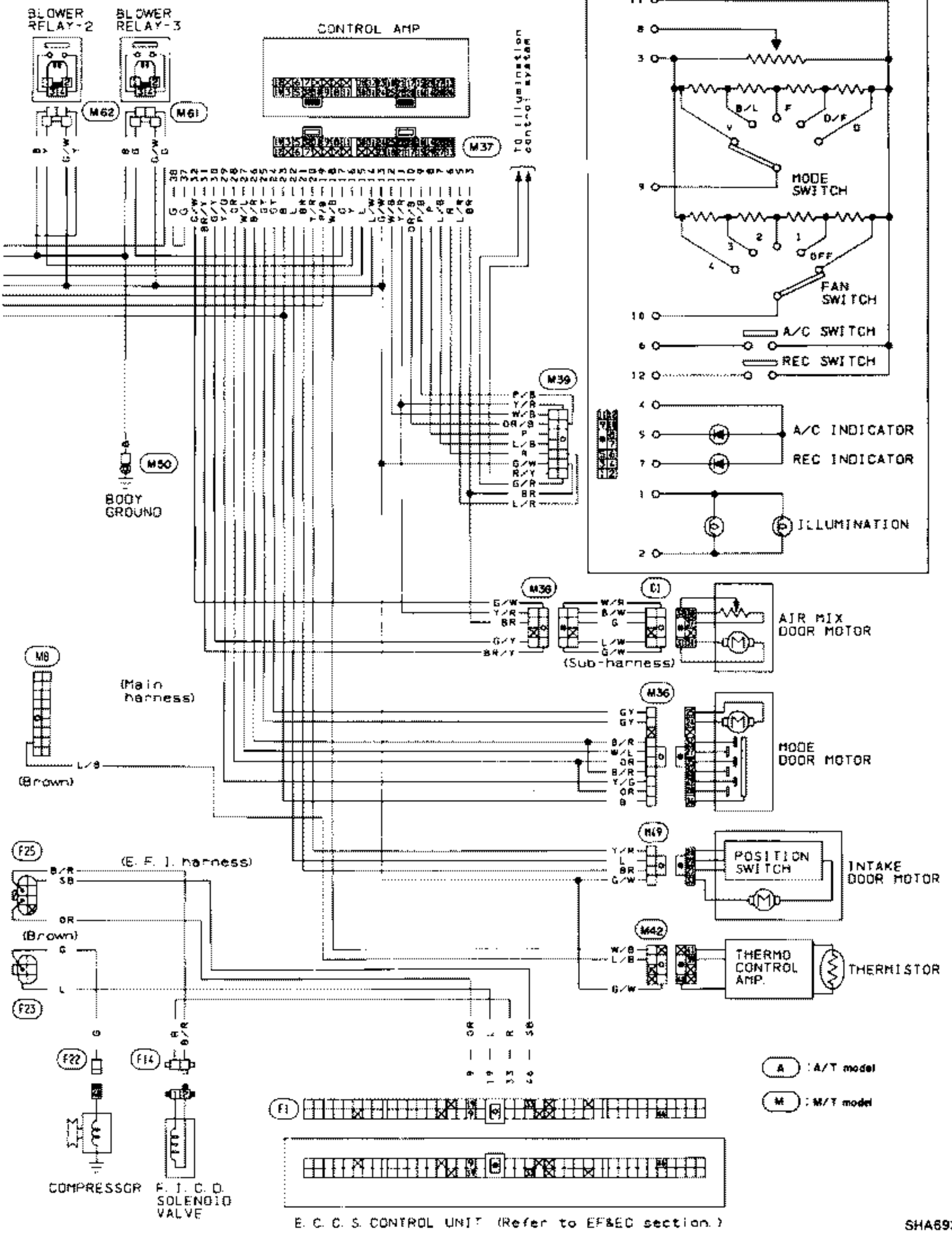

Contents

How to Perform Trouble Diagnoses for Quick and Accurate Repair HA-65
Symptom Chart HA-66
Preliminary Check HA-67
PRELIMINARY CHECK 1
(Intake door is not set at "FRESH" in DEF mode) HA-67
PRELIMINARY CHECK 2
(A/C does not blow cold air) HA-68
PRELIMINARY CHECK 3
(Magnet clutch does not engage in FOOT & DEF or DEF mode) HA-69
PRELIMINARY CHECK 4
(Air outlet does not change) HA-70
PRELIMINARY CHECK 5
(Noise) HA-71
PRELIMINARY CHECK 6
(Insufficient heating) HA-72
Main Power Supply and Ground Circuit check HA-73
Circuit Diagram for Quick Pinpoint Check HA-74
Harness Layout for A/C system HA-75
Diagnostic Procedure 1
(Blower motor does not rotate) HA-77
Diagnostic Procedure 2
(Air outlet does not change) HA-79
Diagnostic Procedure 3
(Intake door does not change in VENT, B/L or FOOT modes) HA-81
Diagnostic Procedure 4
(Magnet clutch does not engage when A/C switch and fan switch are ON) HA-82
Diagnostic Procedure 5
(Illumination or control panel indicators do not come on) HA-86
Diagnostic Procedure 6
(Temperature of air outlet does not change) HA-90
Electrical Component Inspection HA-92

How to Perform Trouble Diagnoses for Quick and Accurate Repair

WORK FLOW

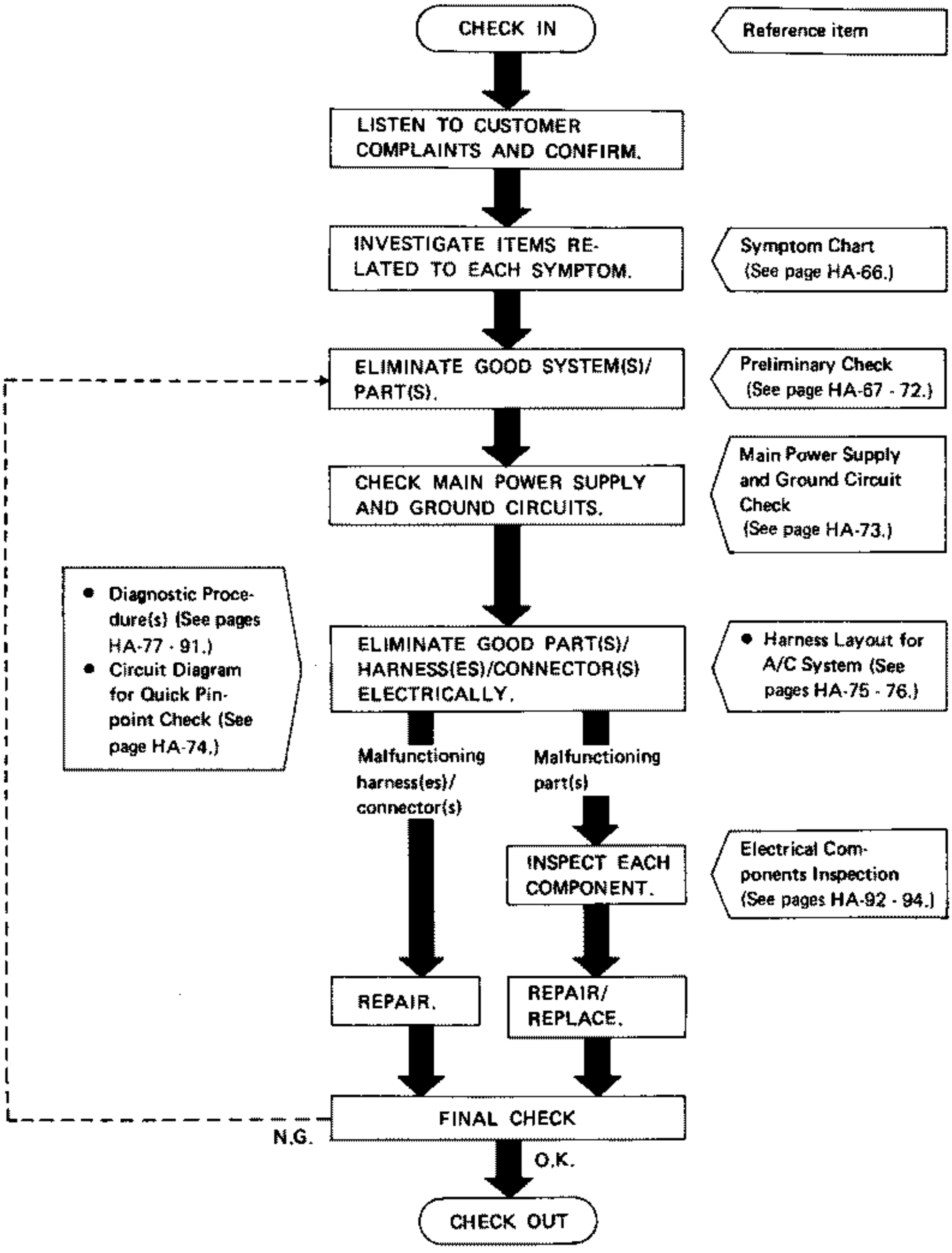

Symptom Chart

DIAGNOSTIC TABLE

PROCEDURE	Preliminary check						Diagnostic Procedure						Main power supply and Ground circuit check		Electrical components inspection										
REFERENCE PAGE	HA-67	HA-68	HA-69	HA-70	HA-71	HA-72	HA-77	HA-79	HA-81	HA-82	HA-86	HA-90	HA-73	—	HA-92	HA-92	HA-92	HA-93	HA-93	HA-93	HA-94	HA-94	—	—	—	—	—
SYMPTOM	Preliminary check 1	Preliminary check 2	Preliminary check 3	Preliminary check 4	Preliminary check 5	Preliminary check 6	Diagnostic procedure 1	Diagnostic procedure 2	Diagnostic procedure 3	Diagnostic procedure 4	Diagnostic procedure 5	Diagnostic procedure 6	Control amp.	Fuses	Fan switch	Blower motor	Blower resistor	A/C switch	Low pressure switch	RELAYS	MODE switch	THERMO CONTROL AMP.	Air mix door motor	Mode door motor	Intake door motor	Compressor	Harness
A/C does not blow cold air.		❶					○			○		○	○	○		○	○		○	○						○	○
Insufficient heating						❶	○					○	○	○		○	○						○				○
Blower motor does not rotate.		❶					❷						○	○		○	○										
Air outlet does not change.				❶				❷					○	○							○			○			○
Intake door does not change in VENT, B/L or FOOT modes.									❶				○	○											○		○
Intake door is not set at "FRESH" in DEF mode.	❶								○				○	○											○		○
Magnet clutch does not engage when A/C switch and fan switch are ON.		❶								❷									○	○		○				○	
Magnet clutch does not engage in FOOT & DEF or DEF mode.		❶	❷							○				○	○				○	○						○	○
Illumination or indicators on switch panel do not come on.											❶			○													○
Noise					❶																						

Preliminary Check

PRELIMINARY CHECK 1

Intake door is not set at "FRESH" in DEF mode.

Is intake door in "Fresh" position when REC switch is turned from ON to OFF in VENT, B/L, FOOT or FOOT & DEF modes with ignition switch at ACC and fan speed at 4?
(Intake door must be at REC/FRE position when VENT mode is selected.)
(Can you hear air moving from the intake unit? Or open glove box and check intake door operation which is located behind the glove box.)

No → Go to **Diagnostic Procedure 3.**

Yes ↓

Is intake door in "REC" position when REC switch is turned from OFF to ON in VENT, B/L, FOOT or FOOT & DEF modes with ignition switch at ACC and fan speed at 4?
(Can you hear air moving from the intake unit? Or open glove box and check intake door operation which is located behind the glove box.)

No → Go to **Diagnostic Procedure 3.**

Yes ↓

Is intake door in "Fresh" position when DEF mode is selected?
(Can you hear air moving from the intake unit? Or open glove box and check intake door operation which is located behind the glove box.)

No → Replace control amp. built-into heater unit.

Yes ↓

INSPECTION END

Z.ONE.DATSUN

Preliminary Check (Cont'd)

PRELIMINARY CHECK 2

A/C does not blow cold air.

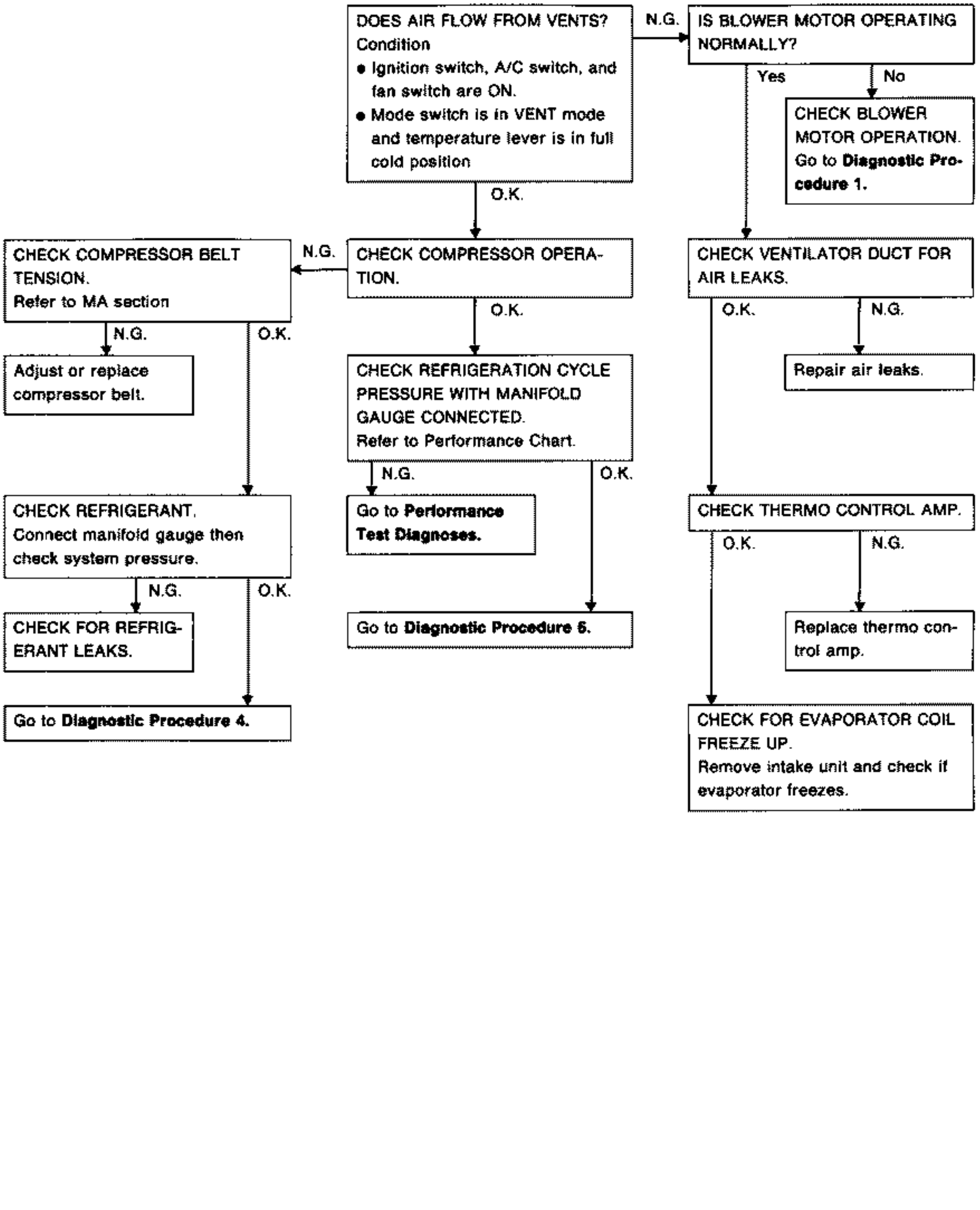

Preliminary Check (Cont'd)

PRELIMINARY CHECK 3

Magnet clutch does not engage in FOOT & DEF or DEF modes.

- **Perform PRELIMINARY CHECK 2 and 4 before referring to the following flow chart.**

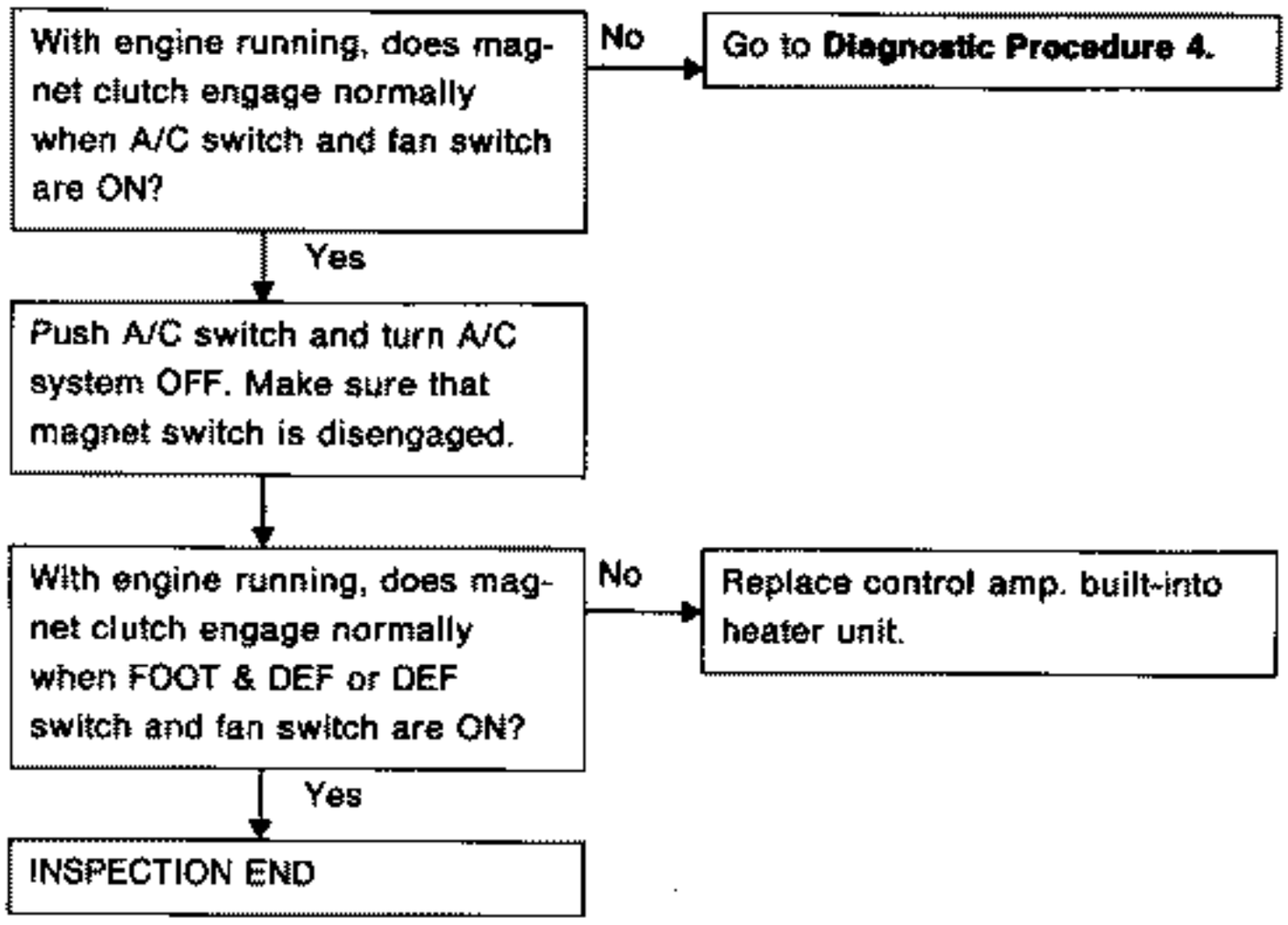

Preliminary Check (Cont'd)

PRELIMINARY CHECK 4

Air outlet does not change.

DOES AIR COME OUT FROM EACH DUCT NORMALLY WHEN EACH MODE SWITCH IS SELECTED WITH IGNITION SWITCH AT ACC?

No → Go to **Diagnostic Procedure 2**

Switch	Air outlet
Mode	VENT
	FOOT & VENT
	FOOT & DEF
	DEF
	DEF

AIR DISTRIBUTION RATIOS

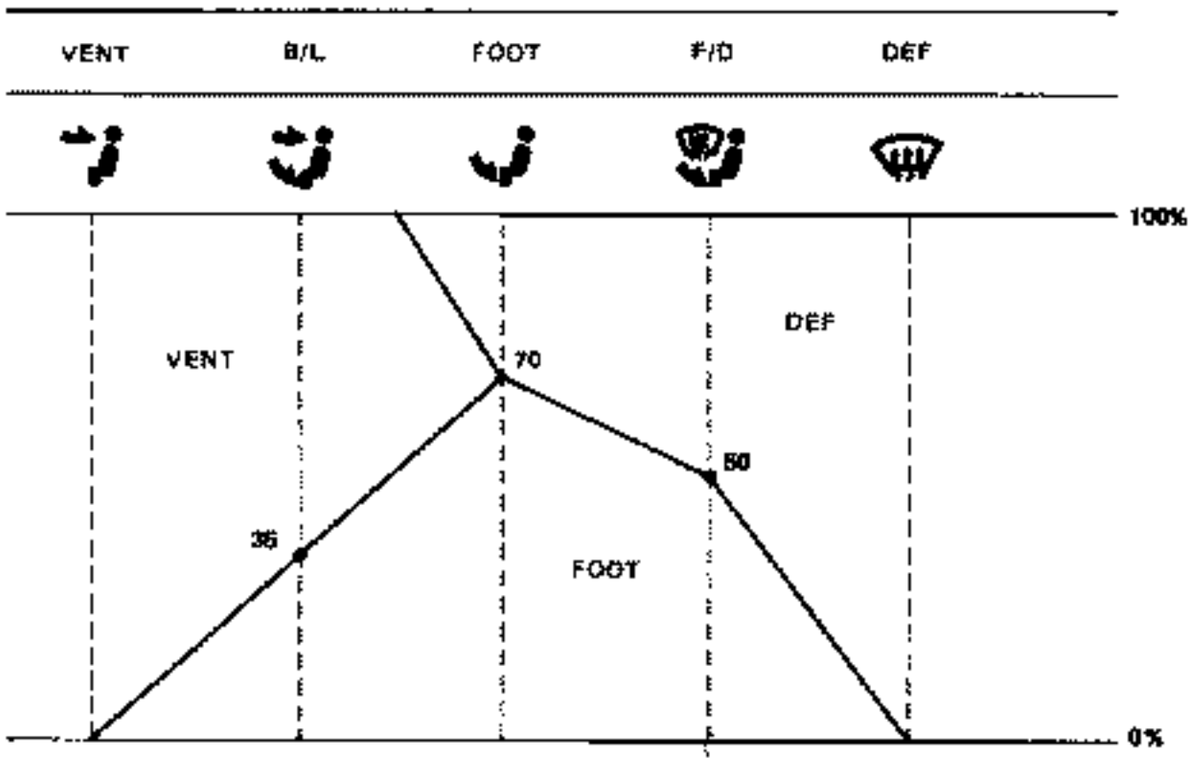

Yes

INSPECTION END

Preliminary Check (Cont'd)

PRELIMINARY CHECK 5

Noise

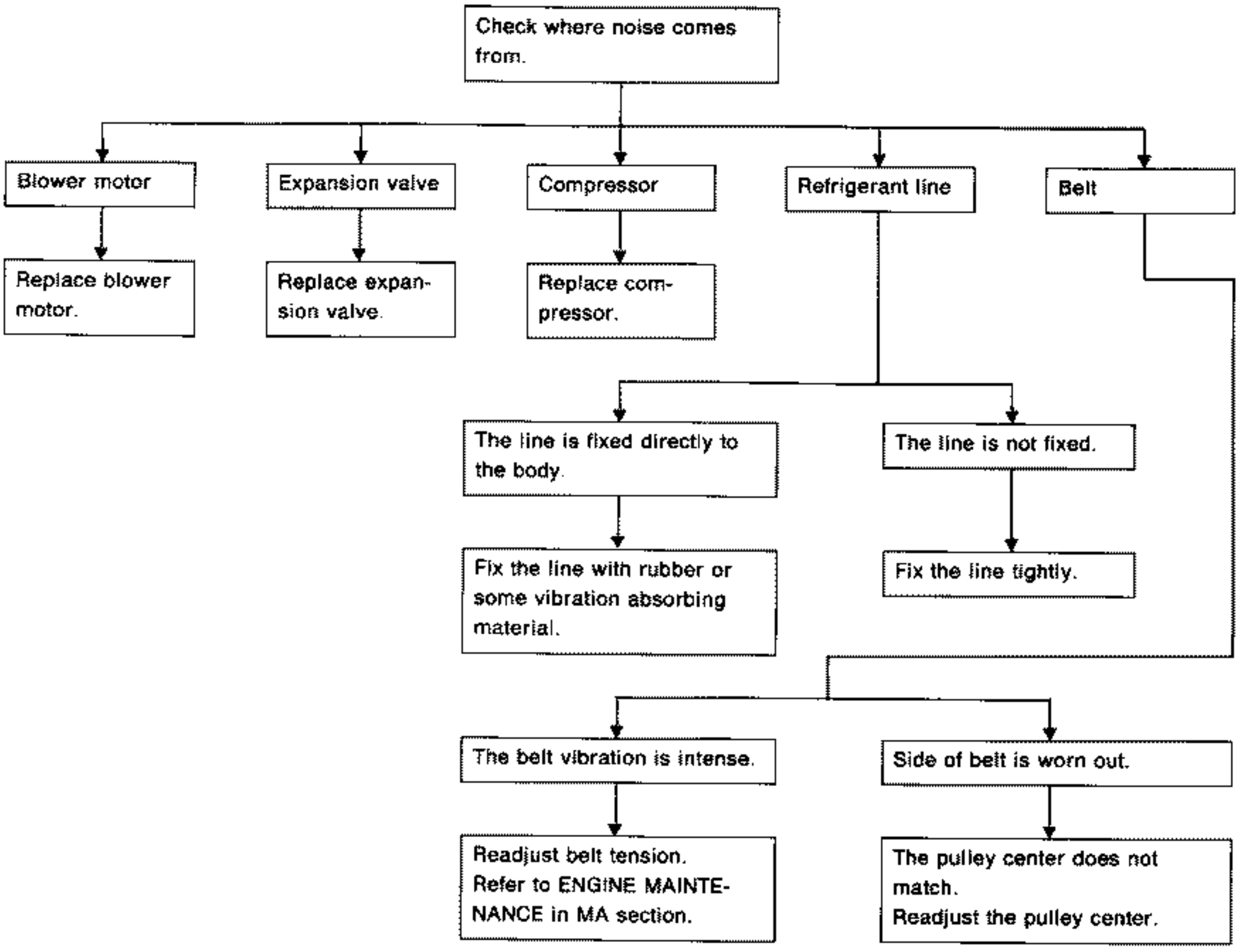

Preliminary Check (Cont'd)

PRELIMINARY CHECK 6

Insufficient heating

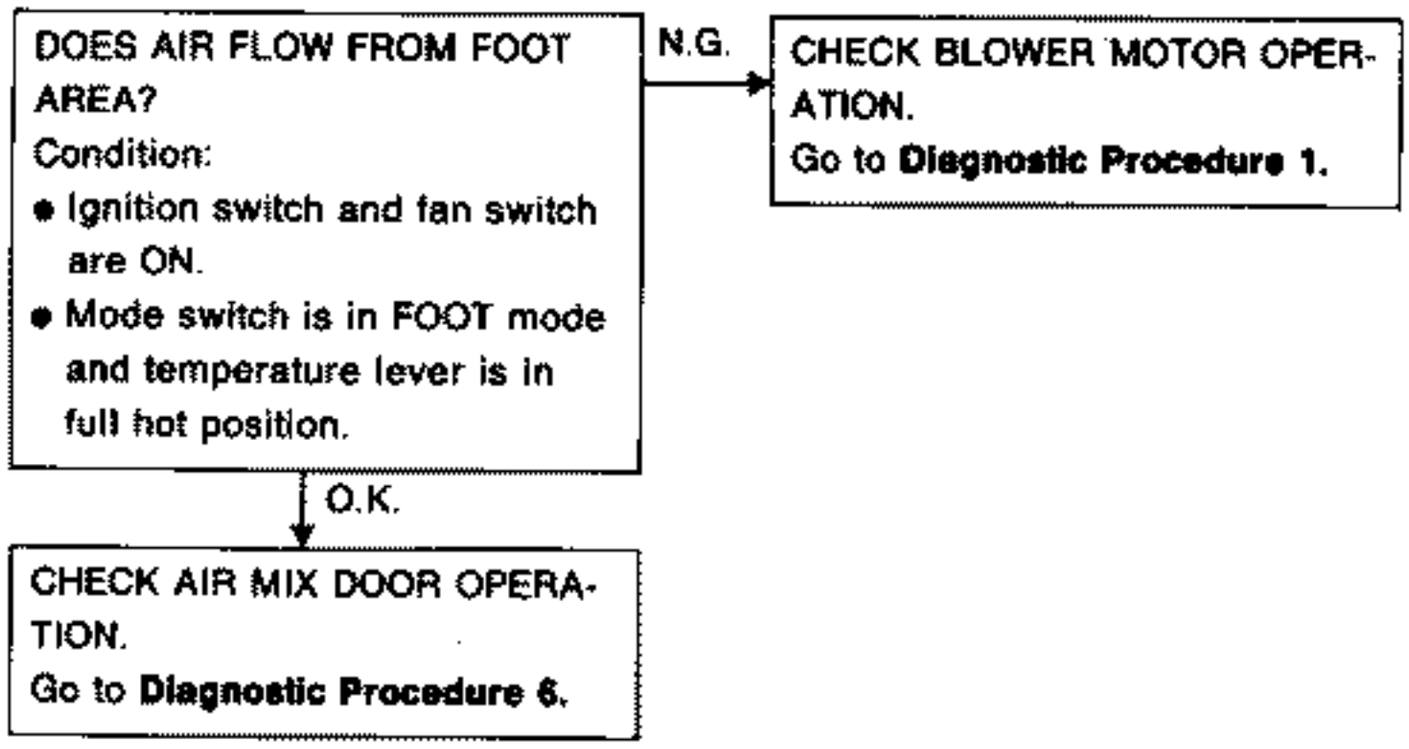

Main Power Supply and Ground Circuit Check

POWER SUPPLY CIRCUIT CHECK FOR A/C SYSTEM

Check power supply circuit for air conditioning system.

Refer to "POWER SUPPLY ROUTING" in section EL and A/C ELECTRICAL CIRCUIT.

CONTROL AMP. REMOVAL

1. Remove driver side instrument lower lid.
2. Remove vent duct.
3. Remove control amp. with harness connected.

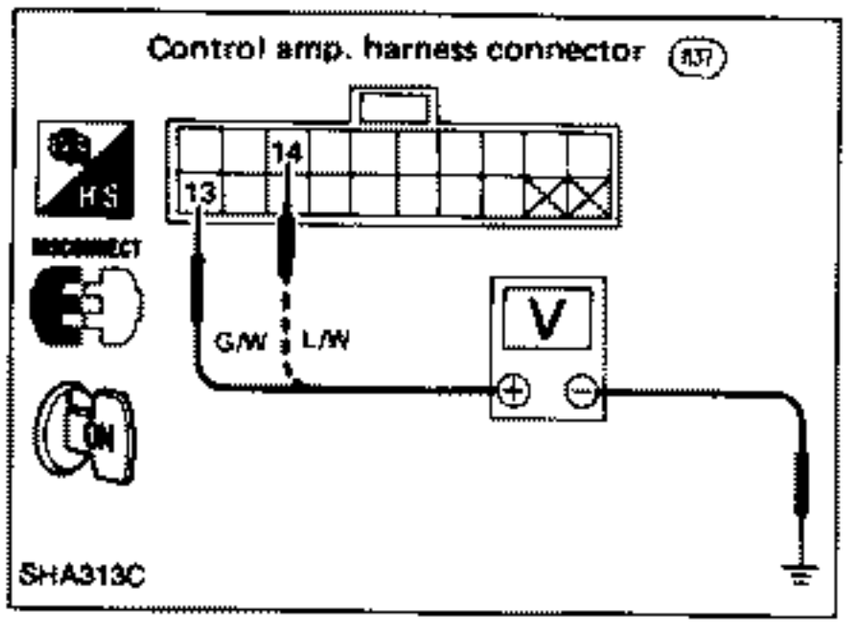

CONTROL AMP. CHECK

1. Disconnect control amp. harness connector.
2. Connect voltmeter from harness side.
3. Measure voltage across terminal No. ⑬ or No. ⑭ and body ground.

Voltmeter terminal		Voltage
⊕	⊖	
⑬	Body ground	Approximately. 12V
⑭		

Check body ground circuit for control amp. with ignition switch OFF.

1. Disconnect control amp. harness connector.
2. Connect ohmmeter from harness side.
3. Check continuity between terminal No. ㉓ and body ground.

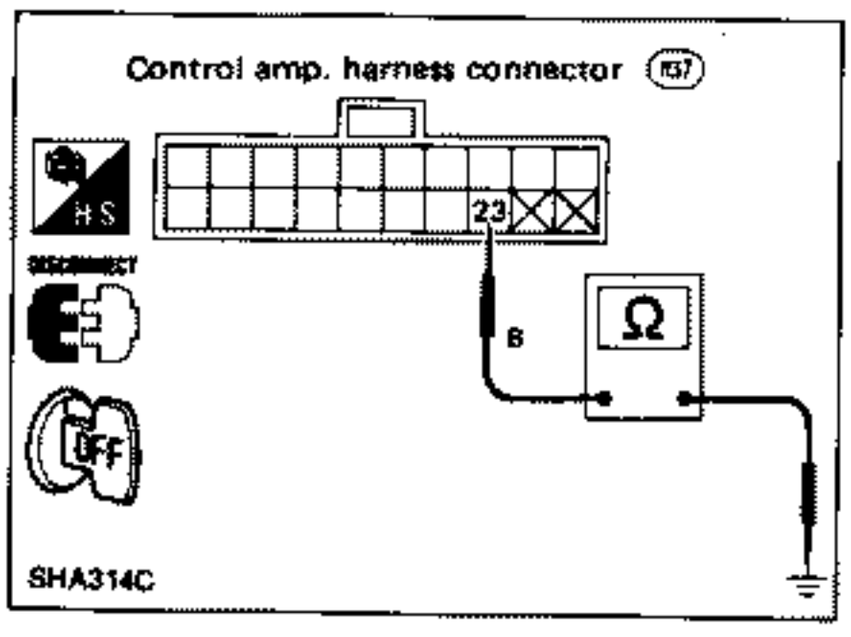

Circuit Diagram for Quick Pinpoint Check

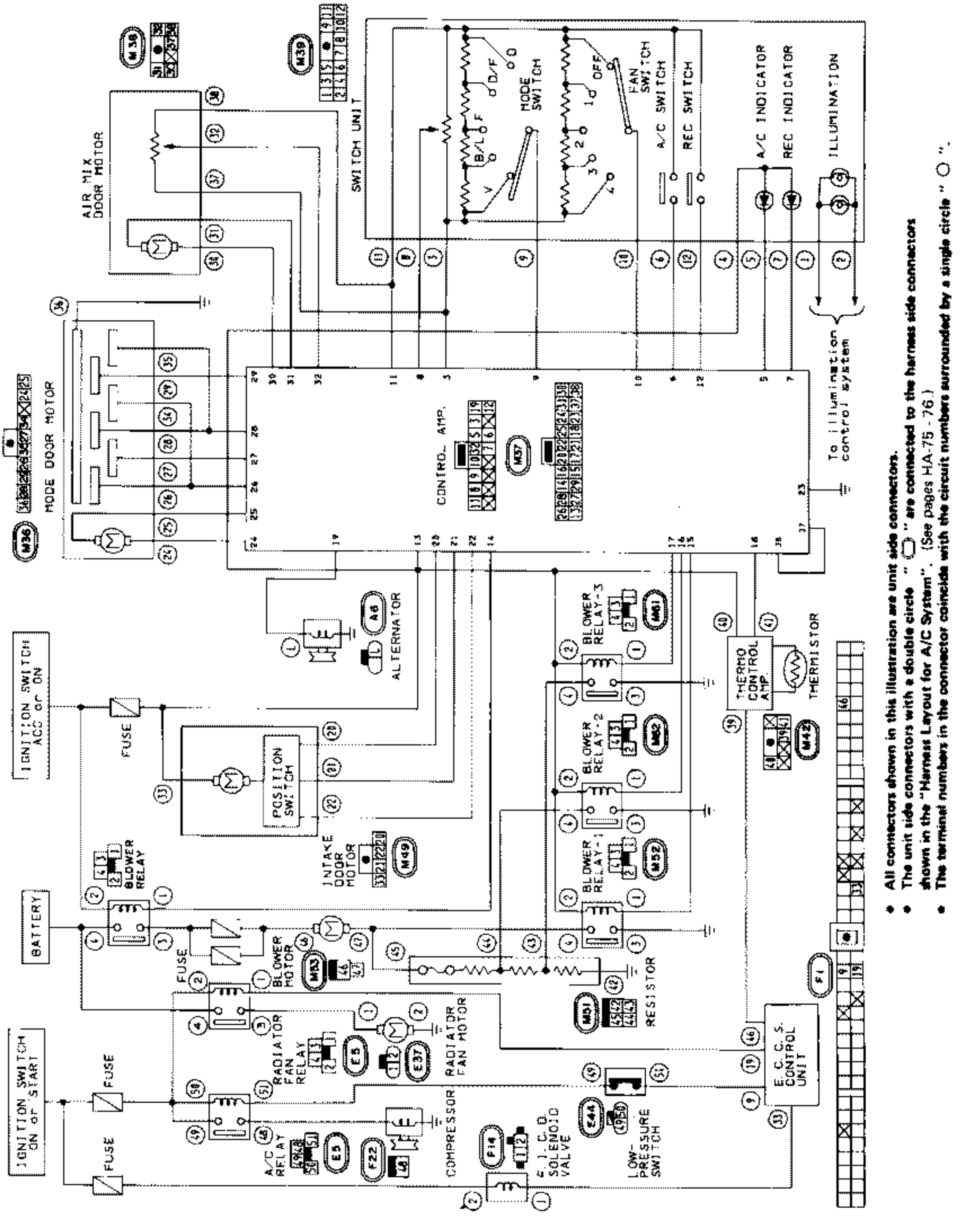

- All connectors shown in this illustration are unit side connectors.
- The unit side connectors with ● double circle " ◎ " are connected to the harness side connectors with ● double circle " ◎ ".
- The unit side connectors with ● single circle " ○ " are connected to the harness side connectors with ● single circle " ○ ". (See pages HA-75 - 76.)
- The terminal numbers in the connector coincide with the circuit numbers surrounded by ● single circle " ○ " shown in the "Harness Layout for A/C System".

SHA693C

Harness Layout for A/C System

ENGINE COMPARTMENT

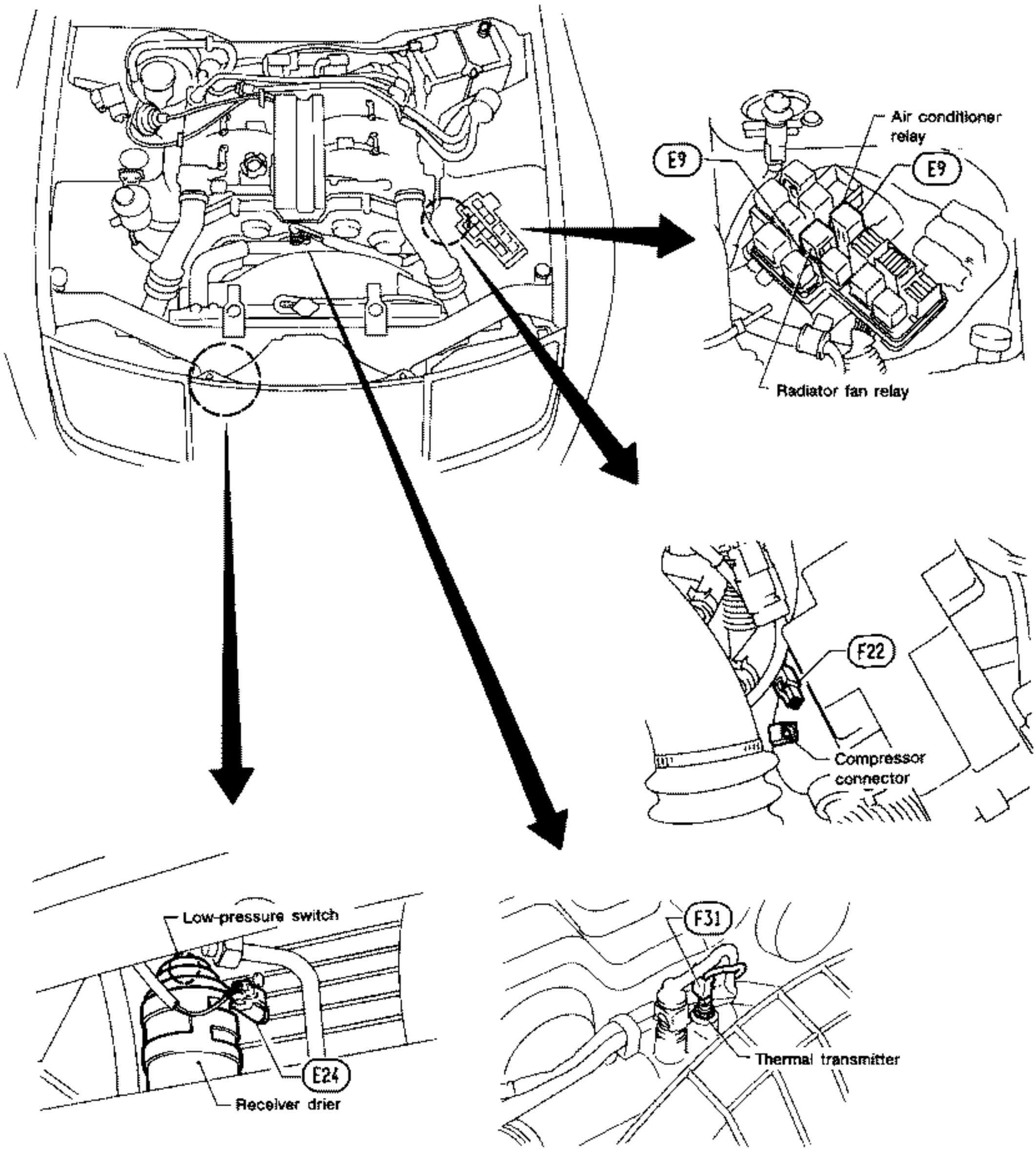

SHA615C

Harness Layout for A/C System (Cont'd)

PASSENGER COMPARTMENT

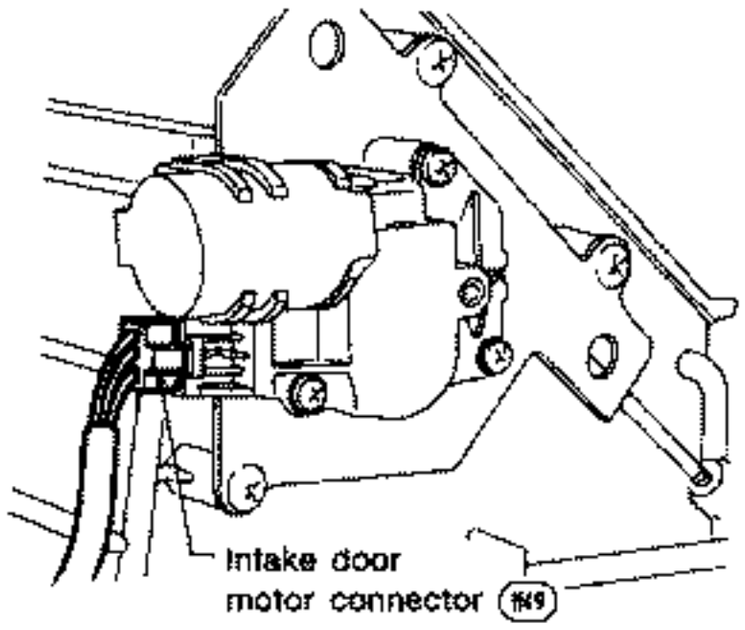

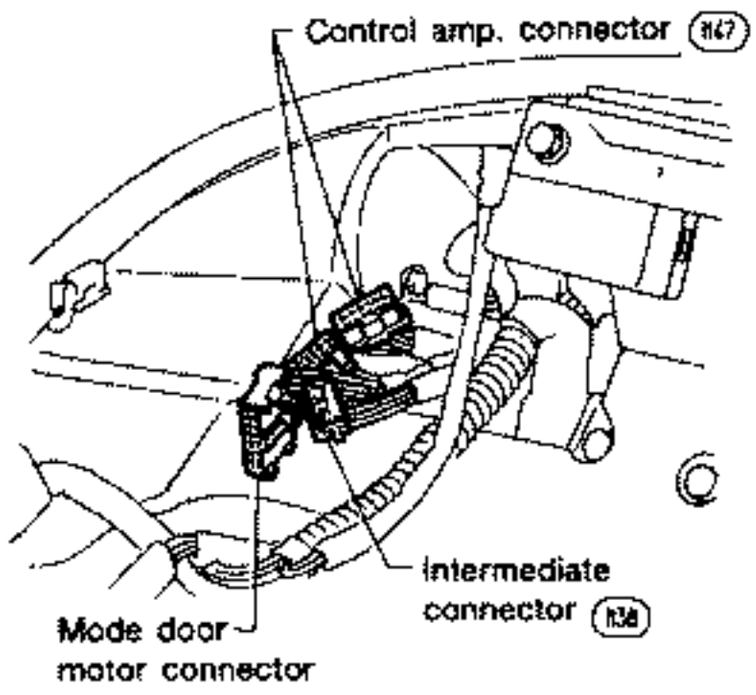

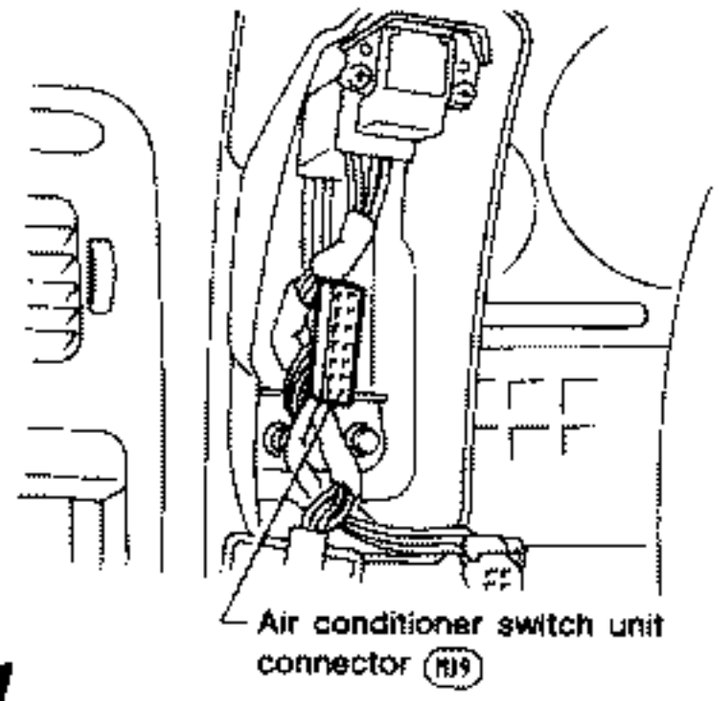

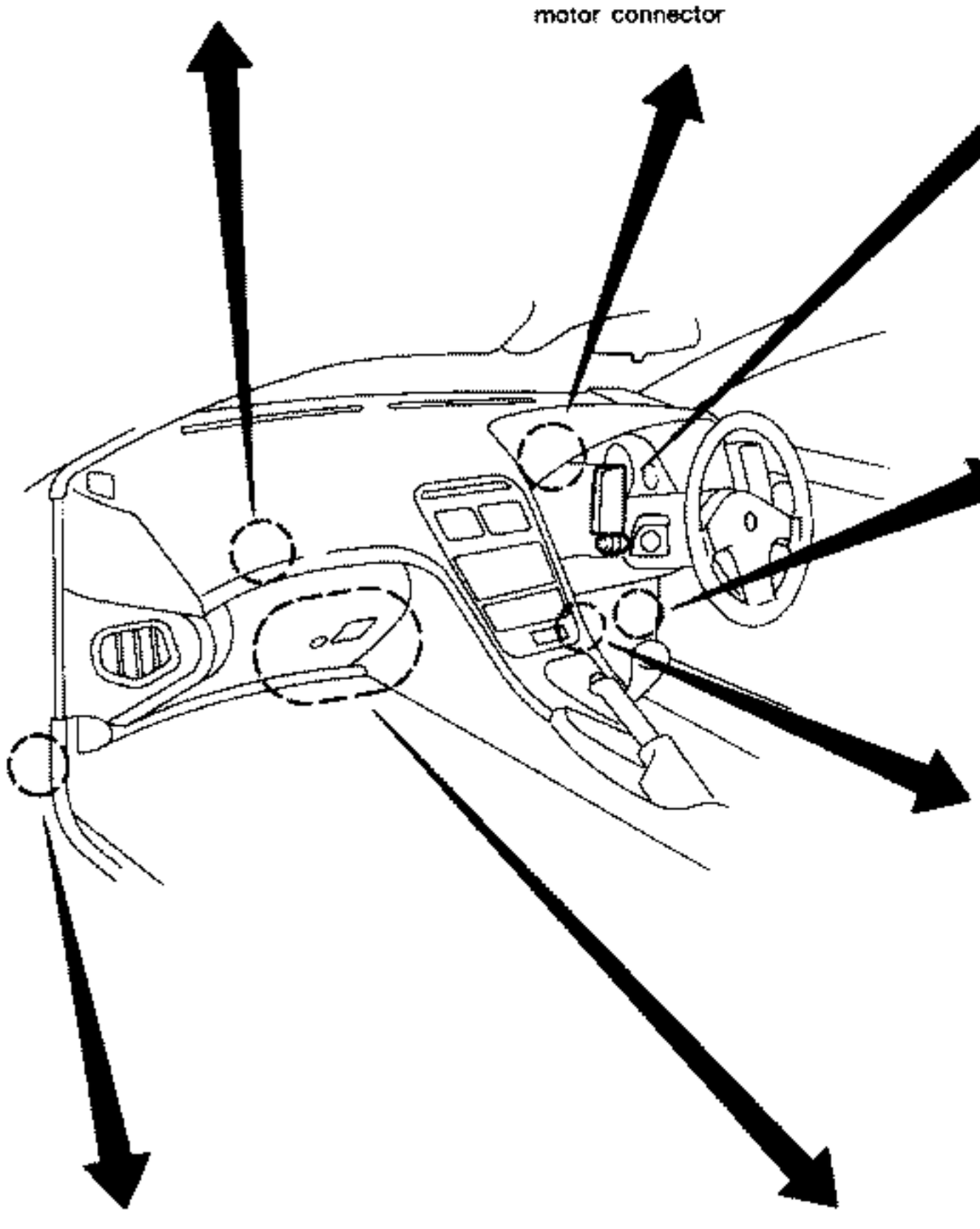

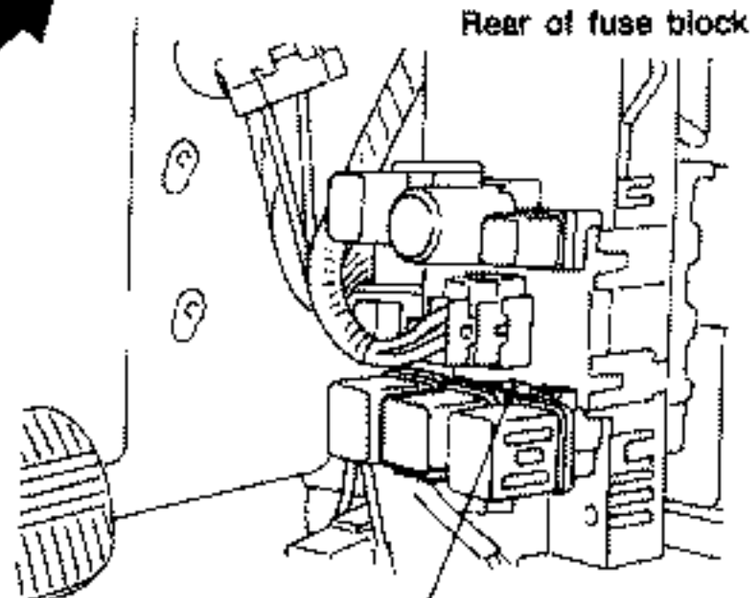

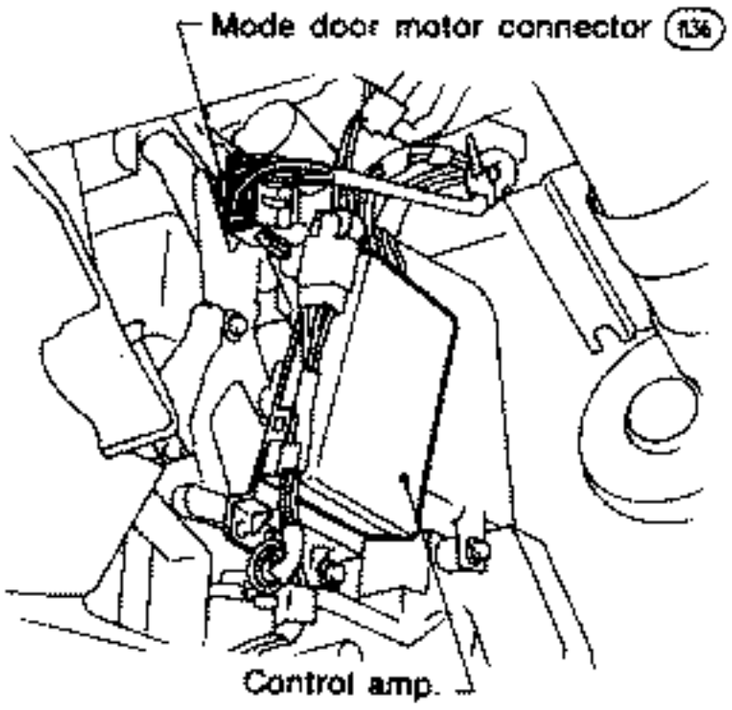

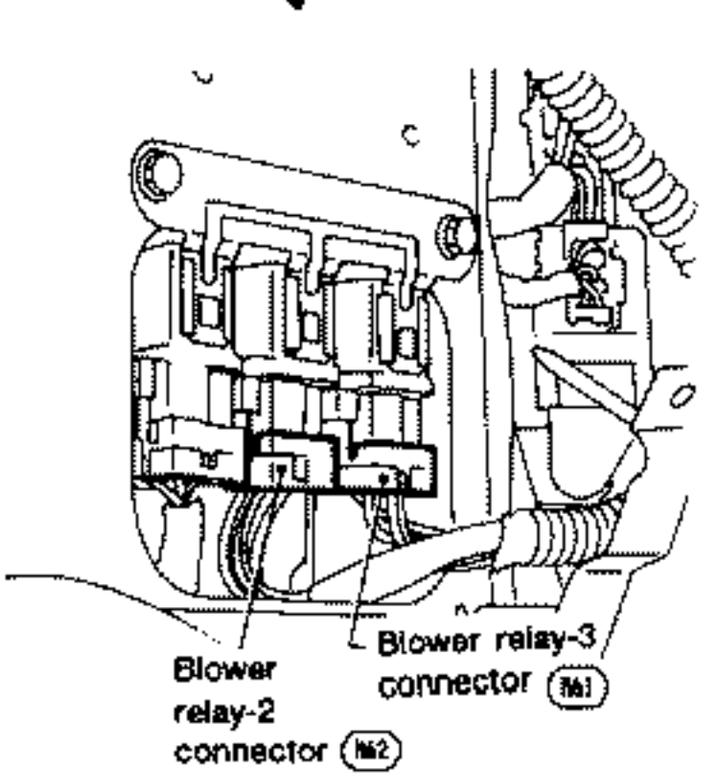

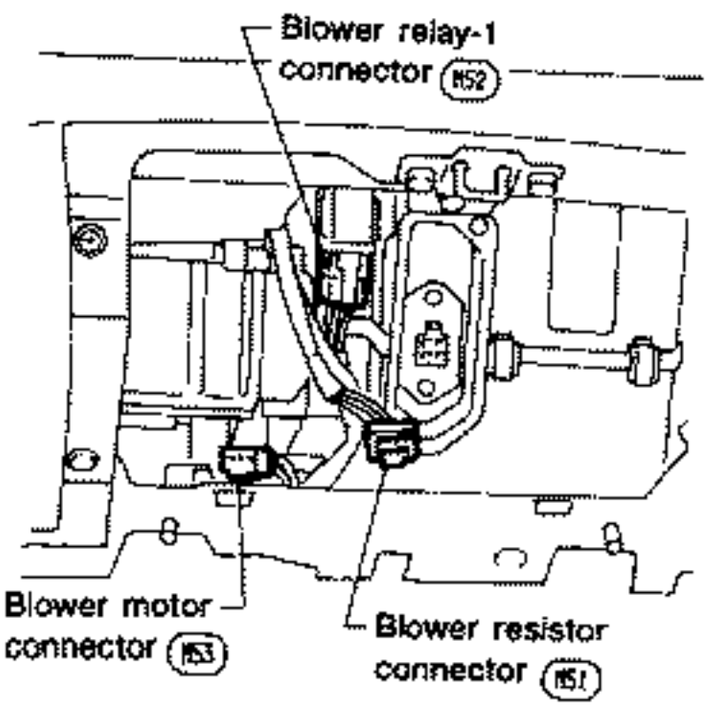

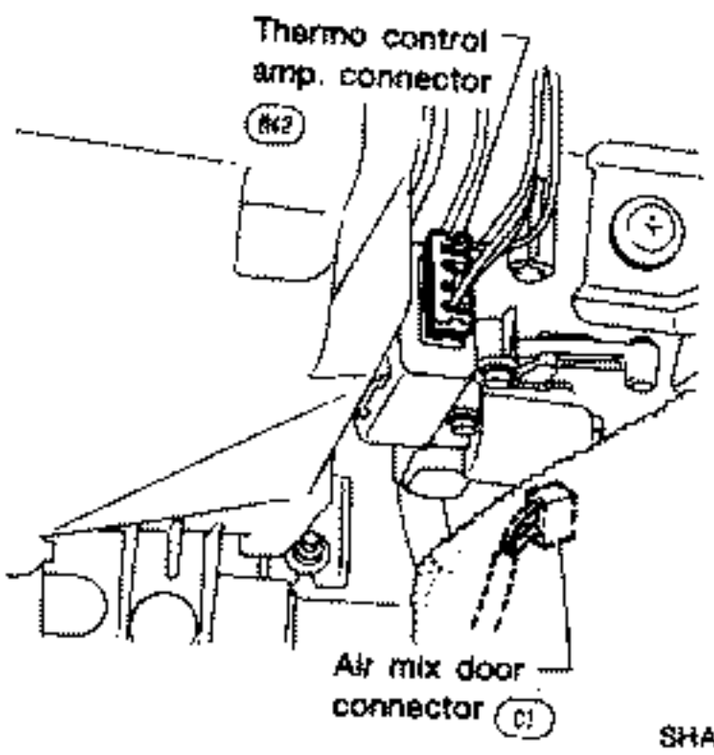

SHA616C

	INCIDENT	Flow chart No.
1	Fan fails to rotate	1
2	Fan does not rotate at speed 1.	2
3	Fan does not rotate at speed 2.	3
4	Fan does not rotate at speed 3.	4
5	Fan does not rotate at speed 4.	5

Diagnostic Procedure 1

SYMPTOM: Blower motor does not rotate.

- **Perform PRELIMINARY CHECK 2 before referring to the following flow chart.**

Check if blower motor rotates properly at each fan speed. Conduct checks as per flow chart.

→ 1 → A

CHECK POWER SUPPLY FOR BLOWER MOTOR.
Disconnect blower motor harness connector.
Do approximately 12 volts exist between blower motor harness terminal No. (46) and body ground?

N.G. → Check fuses at fuse block. (Refer to "POWER SUPPLY ROUTING" in EL section and A/C ELECTRICAL CIRCUIT.)

O.K. ↓

B

Check circuit continuity between blower motor harness terminal No. (47) and body ground.

N.G. → Reconnect blower motor harness connector.

O.K. ↓

CHECK BLOWER MOTOR.
(Refer to Electrical Components Inspection.)

N.G. ↓

Replace blower motor.

2 → B, 3 → C, 4 → D, 5 → E
(Go to next page.)

A

Blower motor harness connector (M53)

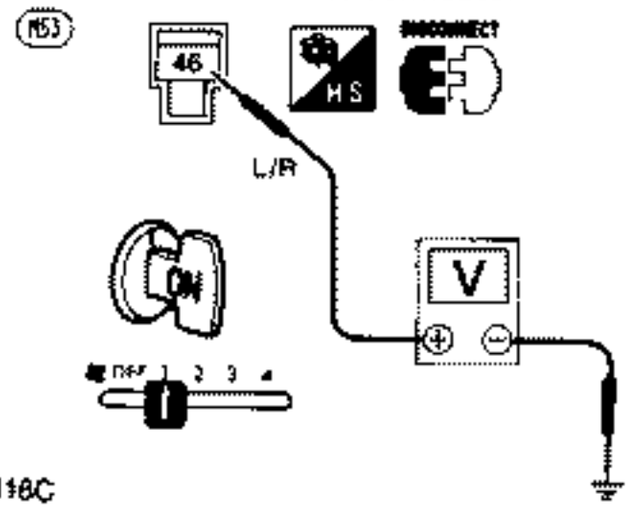

SHA316C

B

Blower motor harness connector (M53)

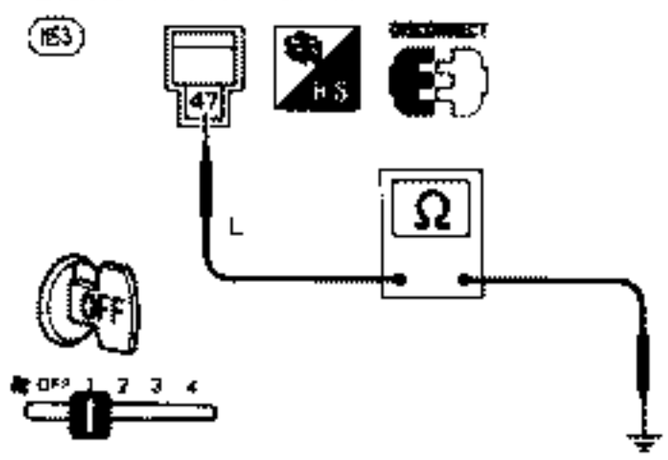

Continuity should exist.

SHA317C

C

Resistor harness connector (R51)

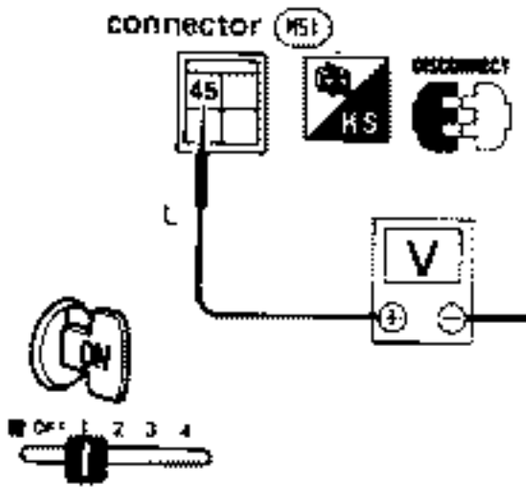

SHA318C

C

CHECK BLOWER MOTOR CIRCUIT BETWEEN BLOWER MOTOR AND RESISTOR.
Do approximately 12 volts exist between resistor harness terminal No. (45) and body ground?

N.G. → Disconnect blower motor and resistor harness connectors.

D

Check circuit continuity between blower motor harness terminal No. (47) and resistor terminal No. (45).

Note

O.K. ↓

A
(Go to next page.)

D

Blower motor harness connector (M53) — Resistor harness connector (R51)

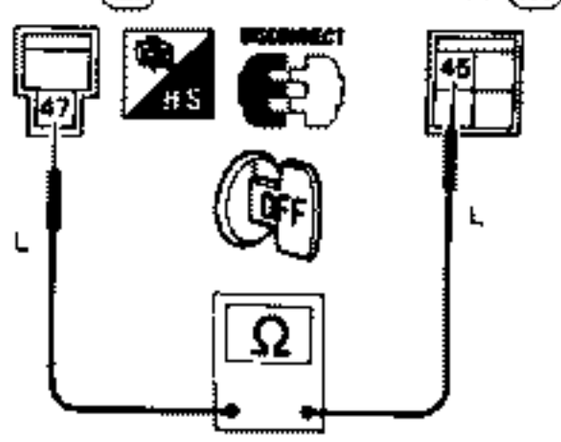

SHA319C

Note:
If the result is N.G. after checking circuit continuity, repair harness or connector.

Diagnostic Procedure 1 (Cont'd)

E

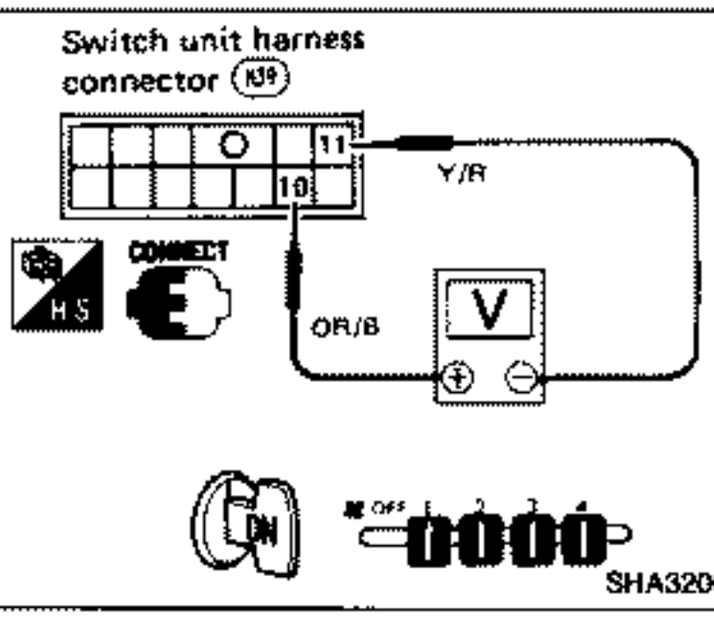

F

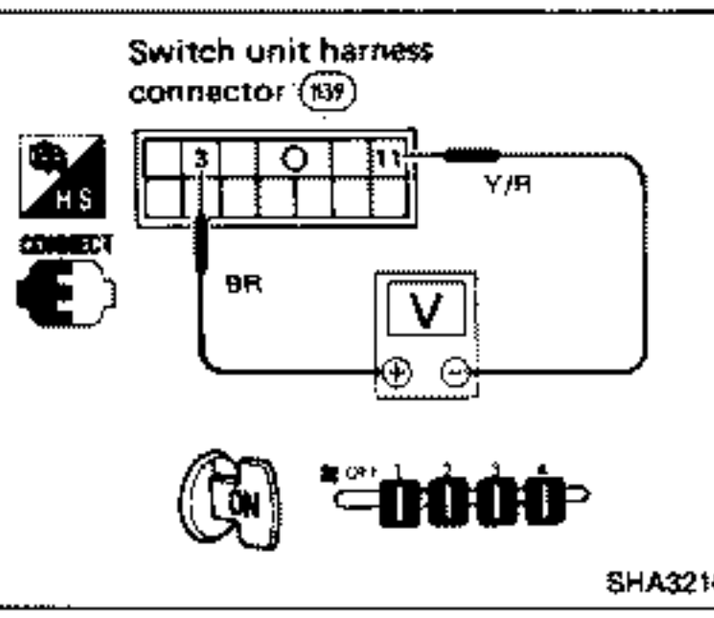

G

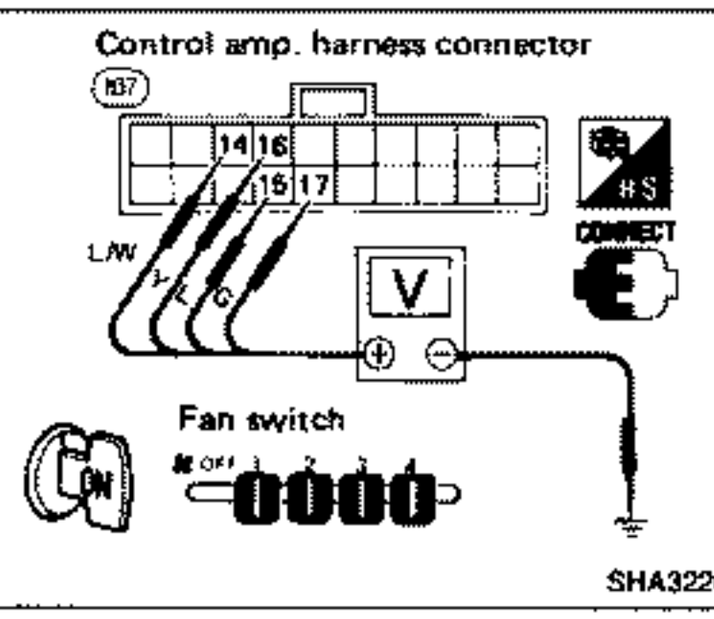

(A) 1

CHECK RESISTOR AFTER DISCONNECTING IT.
(Refer to Electrical Components Inspection.)

O.K. → Reconnect resistor harness connector.

N.G. → Replace resistor.

Reconnect resistor harness connector. → 2 3 4

E

CHECK FAN SWITCH CIRCUIT.
Do normal volts exist between switch unit harness connector terminal?

Flow chart No. (Fan SW position)	Terminal No. ⊕	Terminal No. ⊖	Normal voltage (Approx.)
2 (1)	⑩	⑪	2V
3 (2)			3V
4 (3)			4V
5 (4)			5V

N.G. → F

F

Do approx. 5 volts exist between control panel terminals No. ③ and No. ⑪?

O.K. → Replace fan switch.

5 → E

O.K. → G

G

CHECK CONTROL AMP. HARNESS TERMINAL VOLTAGE.
Do approximately 12 volts or 0 volts exist between control amp. harness terminals No. ⑭, ⑮, ⑯ or ⑰ and body ground?

Flow chart No.	Terminal No.	Fan SW operation ON	Fan SW operation OFF
2	⑭	0V	Approx. 12V
3	⑰	0V	Approx. 12V
4	⑯	0V	Approx. 12V
5	⑮	0V	Approx. 12V

N.G. → Replace control amp.

O.K. → Replace blower motor.

A

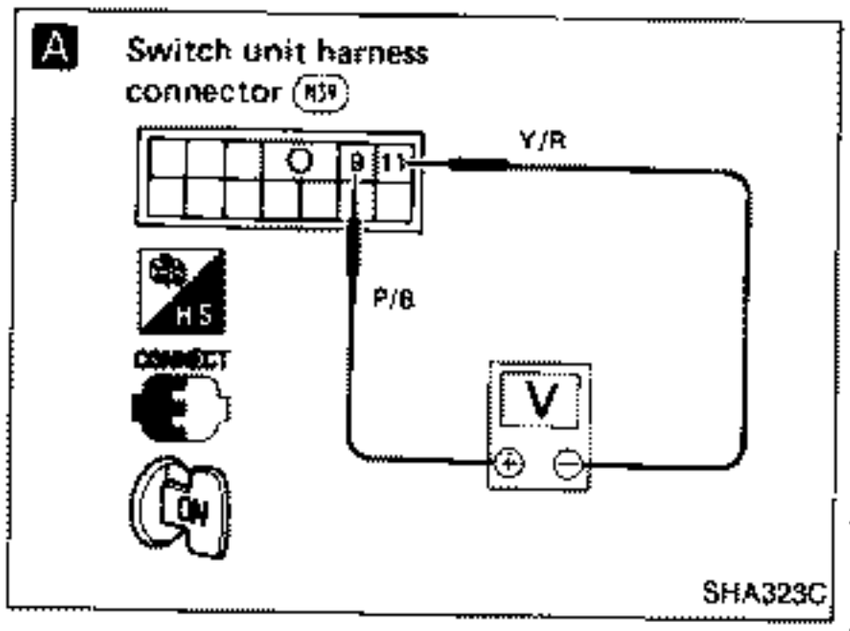

B

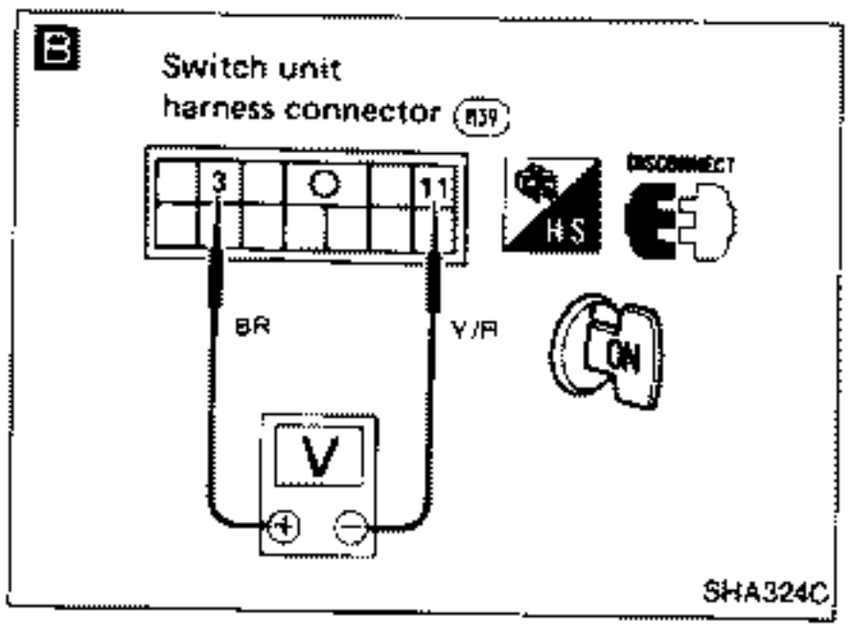

C

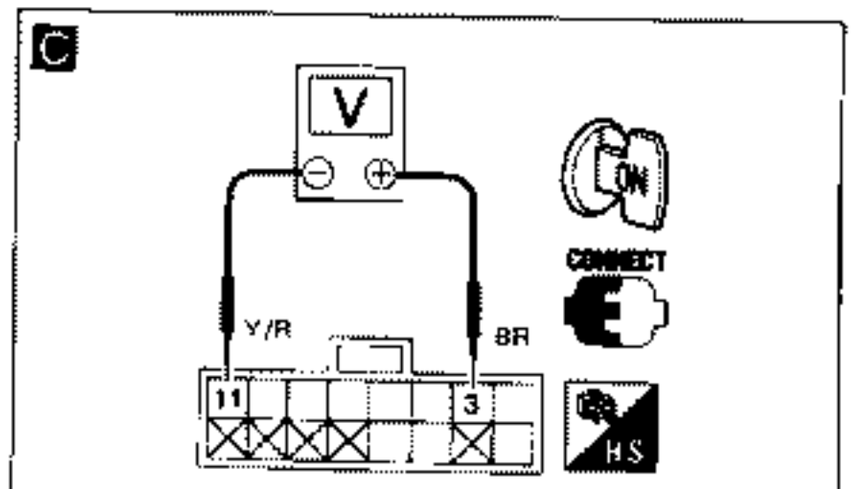

D

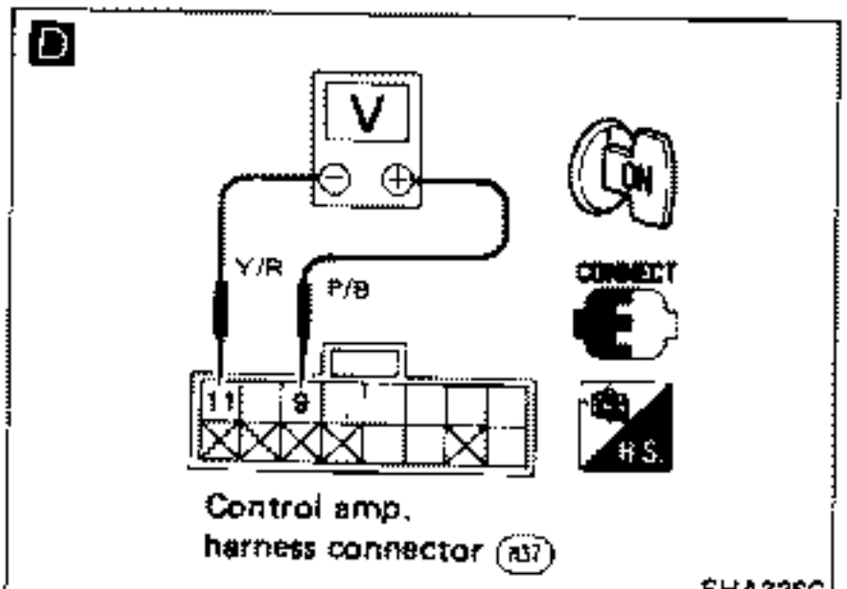

E

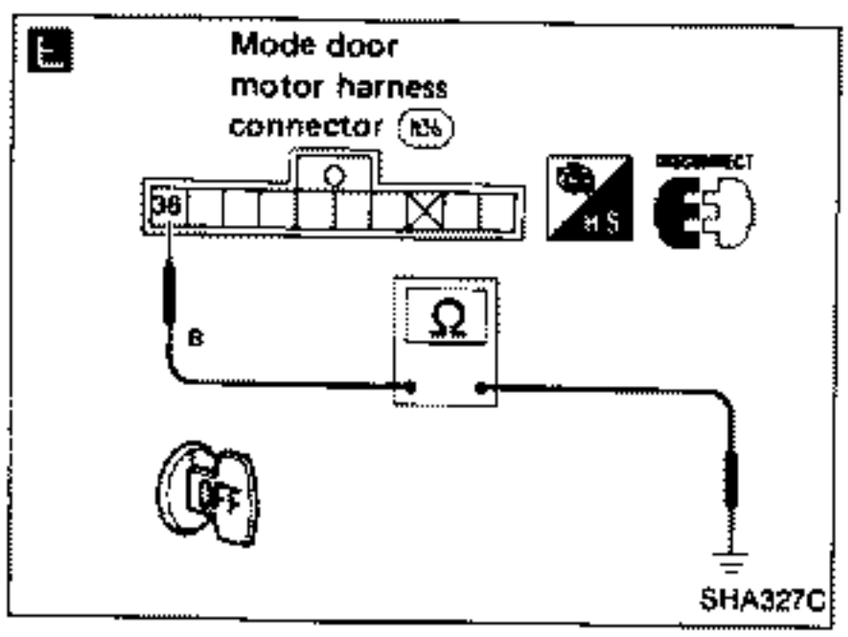

Diagnostic Procedure 2

SYMPTOM: Air outlet does not change.

- **Perform PRELIMINARY CHECK 4 and Main Power Supply and Ground Circuit Check before referring to the following flow chart.**

A

CHECK MODE DOOR MOTOR POSITION SWITCH.
Measure voltage between switch unit harness connector terminals No. ⑨ and ⑪.

Mode switch	Terminal No. ⊕	Terminal No. ⊖	Voltage (Approx.)
VENT	⑨	⑪	5V
B/L			4V
FOOT			3V
F/D			2V
DEF			0V

N.G. → Disconnect switch unit harness connector.

B

Do approximately 5 volts exist between switch unit harness connector terminal No. ③ and ⑪.

N.G. → Replace switch unit.

O.K. →

C

Do approximately 5 volts exist between control amp. harness connectors No. ③ and ⑪.

N.G. → Repair harness or connector.

O.K. → Replace control amp.

D

Measure voltage between control amp. harness connector terminals No. ⑨ and ⑪.

Mode switch	Terminal No. ⊕	Terminal No. ⊖	Voltage (Approx.)
VENT	⑨	⑪	5V
B/L			4V
FOOT			3V
F/D			2V
DEF			0V

N.G. → Repair harness or connector.

O.K. →

E

CHECK BODY GROUND CIRCUIT FOR MODE DOOR MOTOR.
Does continuity exist between mode door motor harness connector terminal No. ㊱ and body ground?

N.G. → Repair harness or connector.

O.K. →

Ⓐ

(Go to next page.)

Diagnostic Procedure 2 (Cont'd)

F

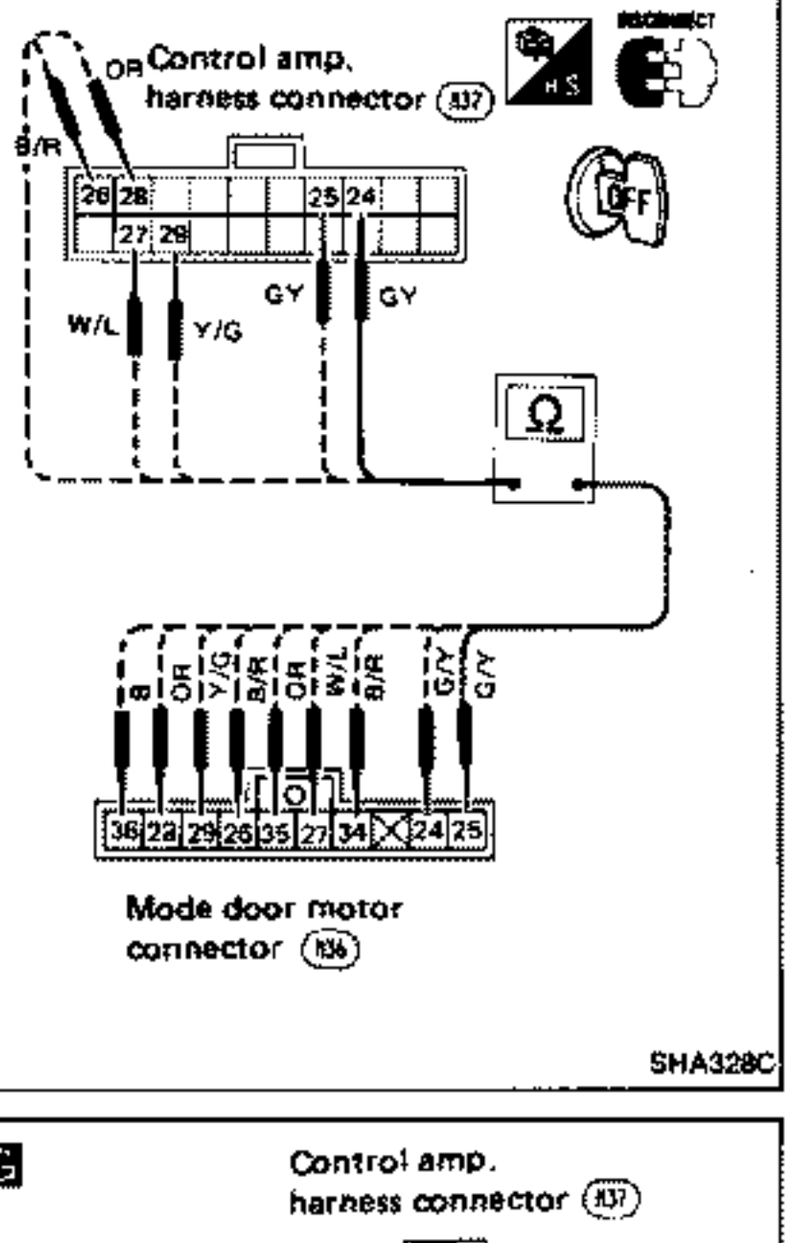

G

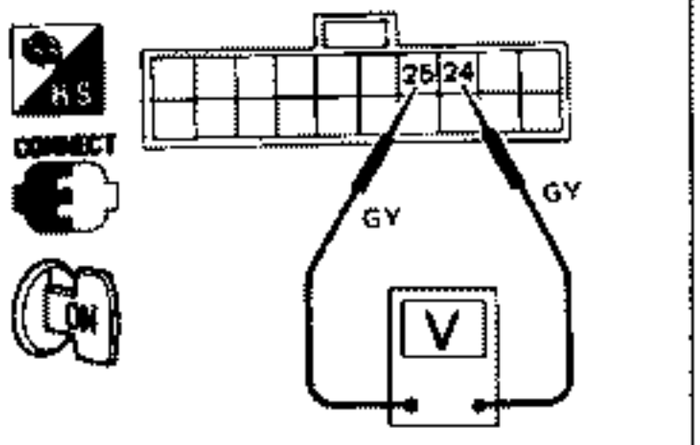

Ⓐ

F

Check circuit continuity between each terminal on control amp. and mode door motor.

N.G. → Repair harness or connector.

Terminal No.		Continuity
Control amp.	Mode door motor	
㉔	㉔	Yes
㉕	㉕	
㉖	㉖ and ㉞	
㉗	㉗	
㉘	㉘ and ㉟	
㉙	㉙	

O.K.

G

CHECK FOR OUTPUT OF CONTROL AMP.
Do approximately 12 volts exist between control amp. harness terminals No. ㉔ and ㉕ when mode is switched from "VENT" to "DEF" or when mode is switched from "DEF" to "VENT"?

N.G. → Replace control amp.

Terminal No.		Mode door motor	
㉔	㉕	Mode door operation	Direction of linkage rotation
⊖	⊖	Stop	Stop
⊖	⊕	VENT → DEF	Counter-clockwise
⊕	⊖	DEF → VENT	Clockwise

O.K.

Replace mode door motor.

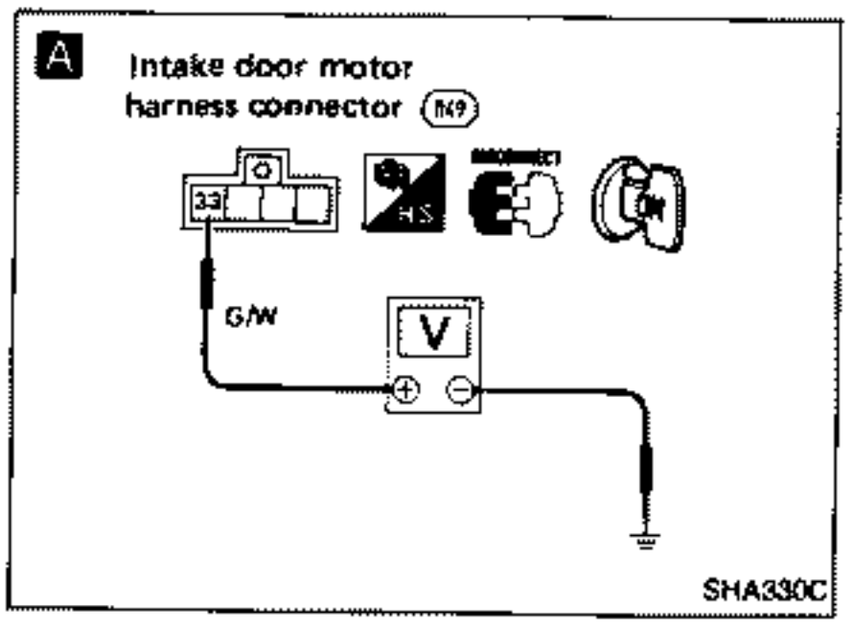

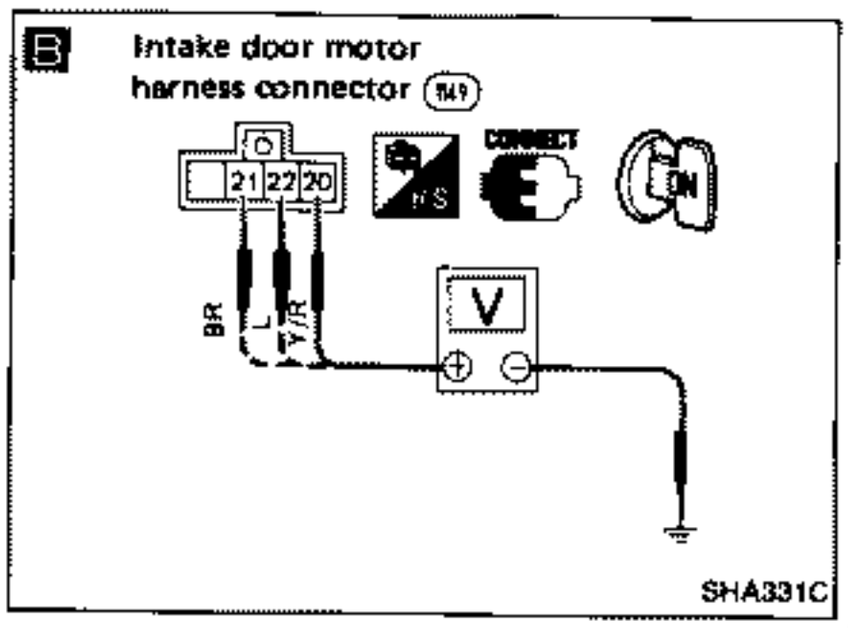

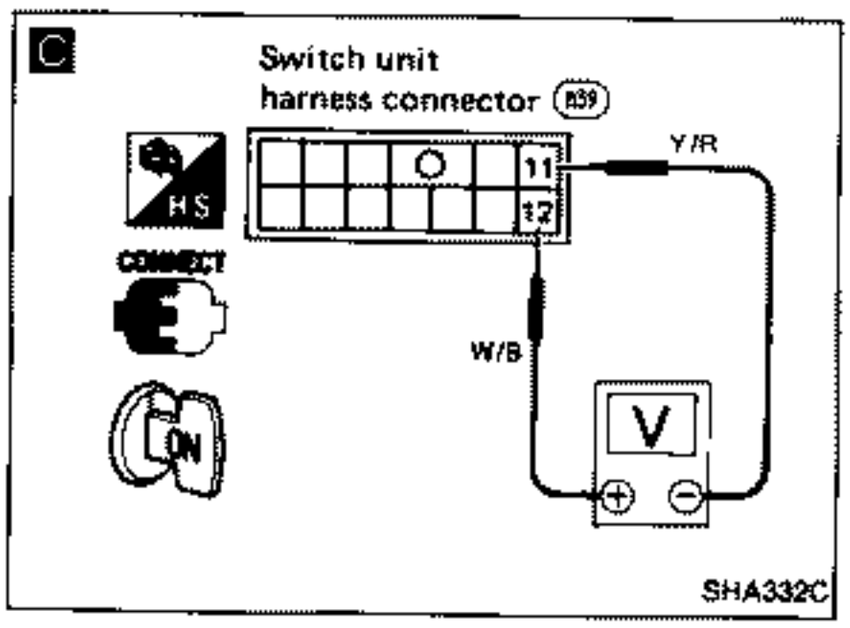

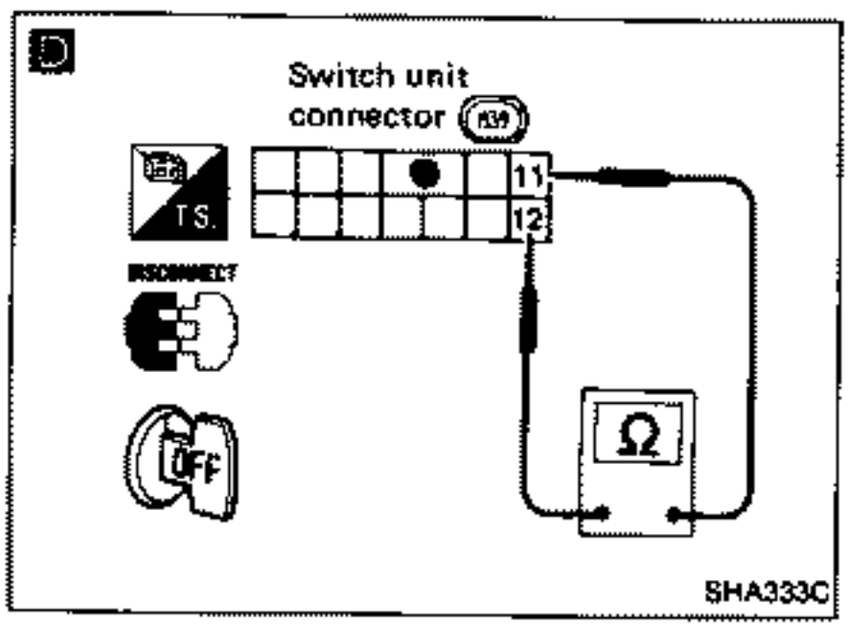

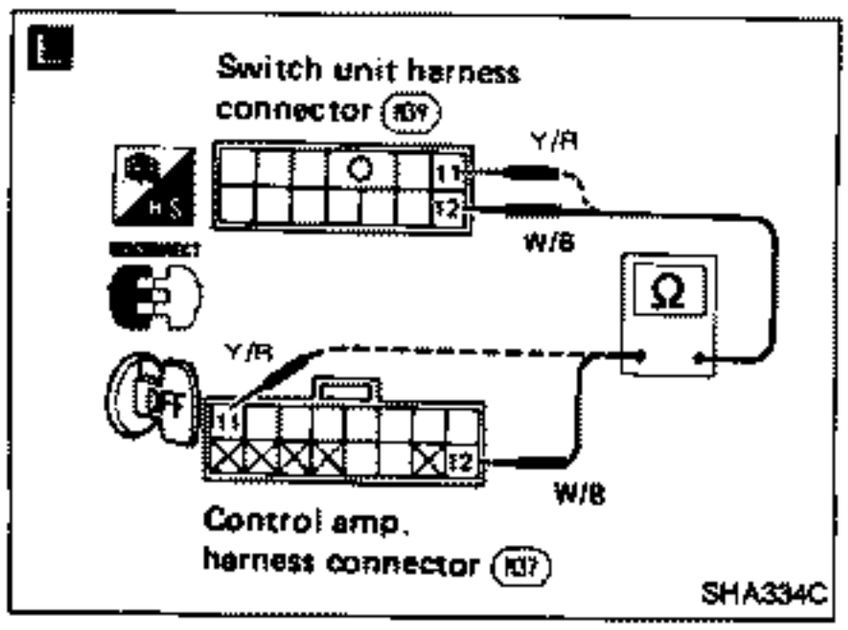

Diagnostic Procedure 3

SYMPTOM: Intake door does not change in VENT, B/L, or FOOT modes.

- **Perform PRELIMINARY CHECK 1, and Main Power Supply and Ground Circuit Check before referring to the following flow chart.**

A

CHECK POWER SUPPLY FOR INTAKE DOOR MOTOR.
Disconnect intake door motor harness connector.
Do approximately 12 volts exist between intake door motor harness terminal No. ㉝ and body ground?

N.G. → Check intake door motor power supply circuit continuity.

O.K. ↓

B

Select VENT mode and check the voltage between intake door motor harness terminals No. ⑳, ㉑, ㉒ and body ground.

A/C switch	REC switch	Mode	Terminal voltage (Approx.)		
			⑳	㉑	㉒
ON	ON	REC	12V	12V	0V
ON	OFF	REC/FRE	12V	0V	12V
OFF	OFF	FRE	0V	12V	12V

N.G. → **C**

Check the voltage between control panel harness connector terminals No. ⑫ and ⑪.

A/C switch	Terminal No.		Voltage (Approx.)
	⑥	⑪	
Switch pressed	⊕	⊖	0V
Switch free			5V

N.G. → Disconnect control panel connector. → **D**

Check circuit continuity between control panel terminals No. ⑫ and ⑪.

REC switch	Continuity between terminal No. ⑫ and ⑪
Switch pressed	Yes
Switch free	No

N.G. → Replace control panel.

O.K. ↓

E

Check circuit continuity between control panel harness terminal No. ⑫ (⑪) and control amp. harness terminal No. ⑫ (⑪).

N.G. → Repair harness or connector.

O.K. ↓

Replace control amp.

O.K. ↓

Replace intake door motor.

O.K. → Replace control amp.

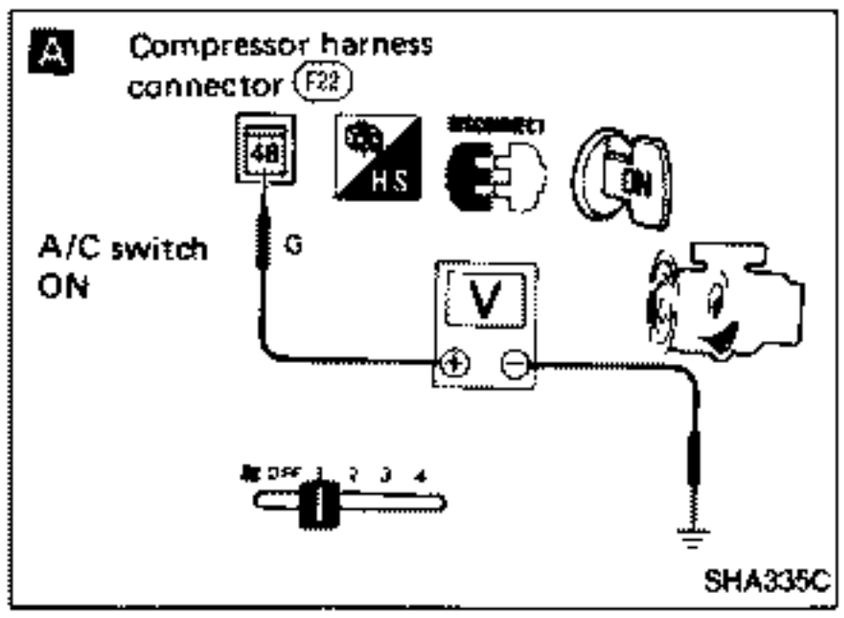

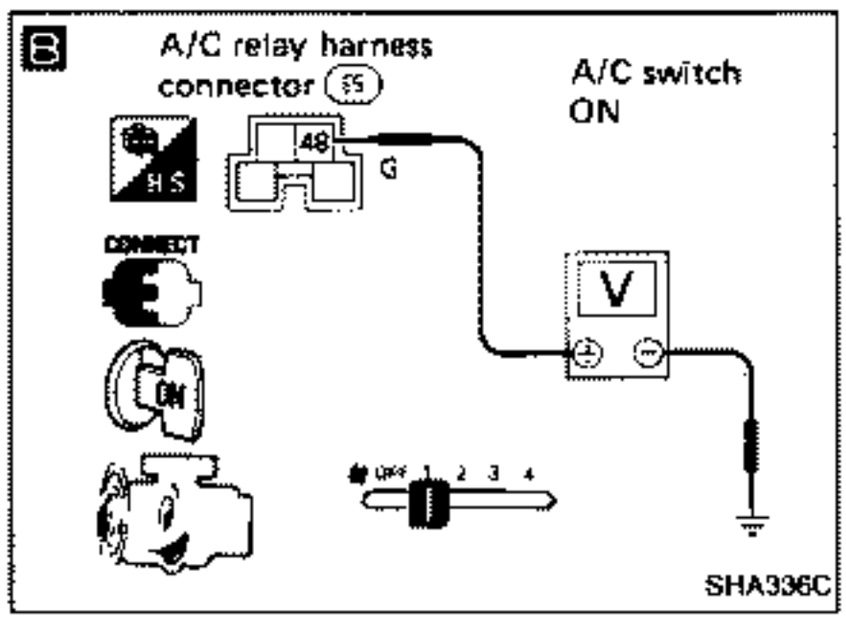

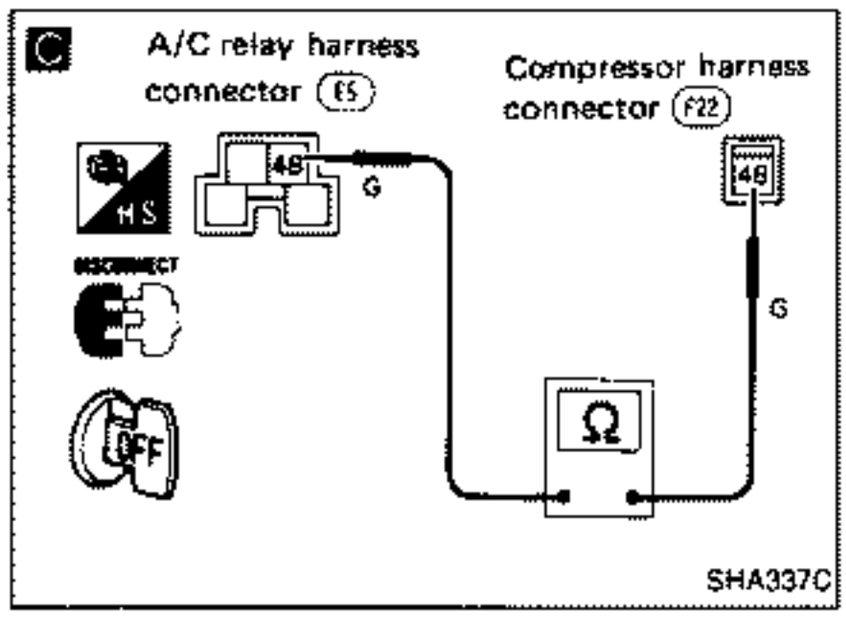

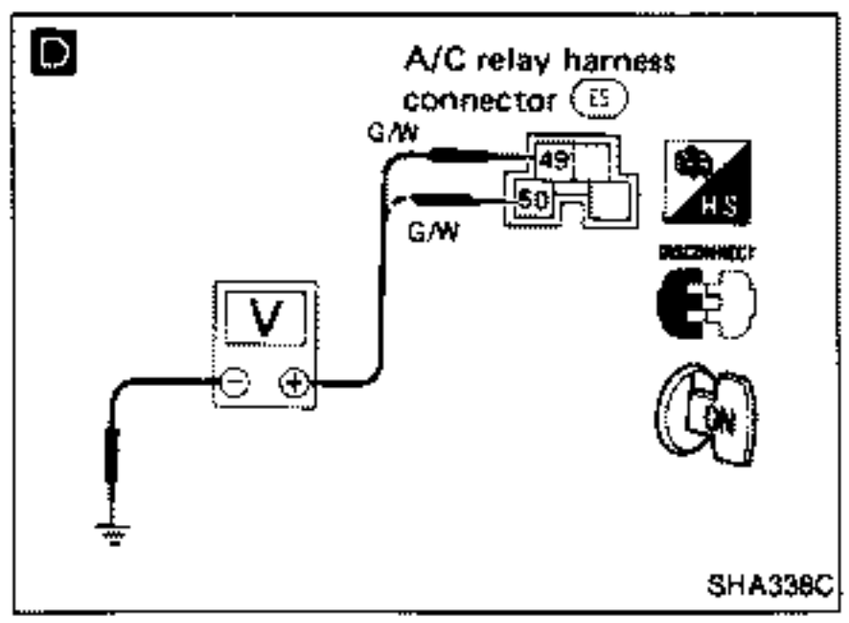

Diagnostic Procedure 4

SYMPTOM: Magnet clutch does not engage with A/C switch and fan switch are ON.

- **Perform PRELIMINARY CHECK 2 before referring to the following flow chart.**

A

CHECK POWER SUPPLY FOR COMPRESSOR.
Disconnect compressor harness connector.
Do approximately 12 volts exist between compressor harness connector terminal No. (48) and body ground?

O.K. → Check magnet clutch coil.

N.G. → Replace magnet clutch.
Refer to COMPRESSOR — Model MJS170 (HITACHI make).

N.G. → B

B

CHECK A/C RELAY OPERATION.
Do approximately 12 volts exist between A/C relay harness connector terminal No. (48) and body ground?

N.G. → D

D

CHECK POWER SUPPLY FOR A/C RELAY.
Disconnect A/C relay.
Do approximately 12 volts exist between A/C relay harness terminals No. (49), (50) and body ground?

O.K. → CHECK POWER SUPPLY CIRCUIT AND FUSE AT FUSE BLOCK.
(Refer to "POWER SUPPLY ROUTING" in EL section and A/C ELECTRICAL CIRCUIT.)

N.G. → Disconnect A/C relay harness connector.

C

Note

Check circuit continuity between A/C relay harness connector terminal No. (48) and compressor harness connector terminal No. (48).

CHECK A/C RELAY AFTER DISCONNECTING IT.
(Refer to Electrical Components Inspection.)

N.G. → Replace A/C relay.

O.K. → Reconnect A/C relay.

Reconnect A/C relay.

→ A

(Go to next page.)

Note:
If the result is N.G. after checking circuit continuity, repair harness or connector.

Diagnostic Procedure 4 (Cont'd)

E

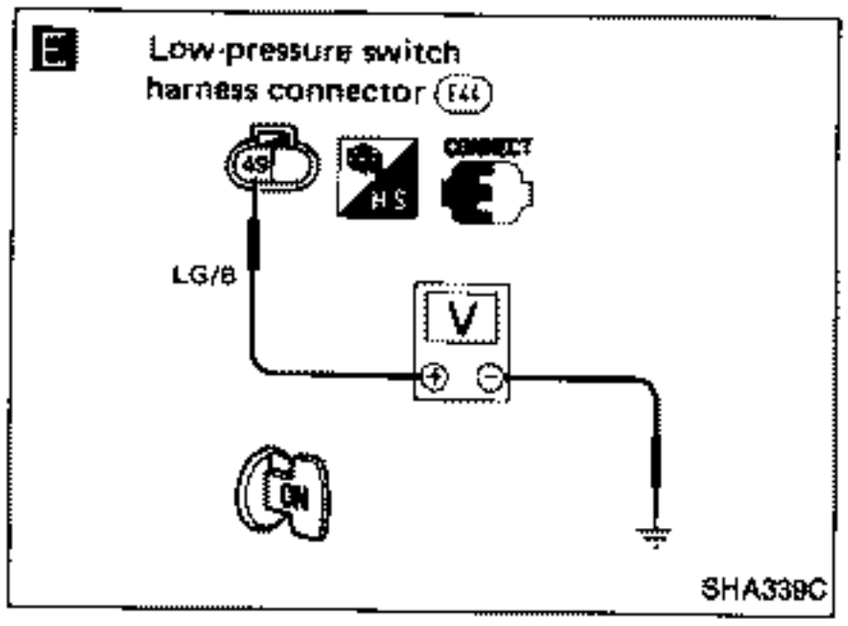

F

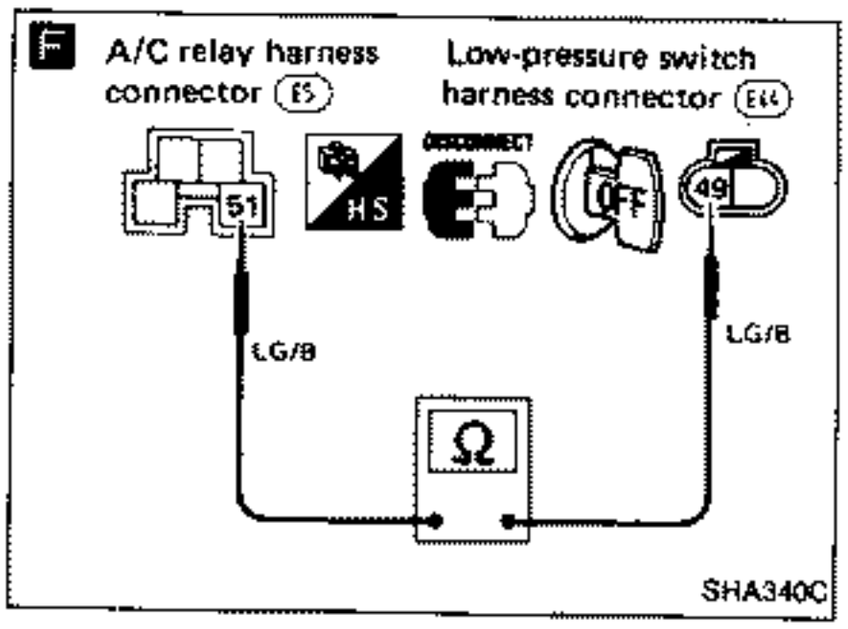

G

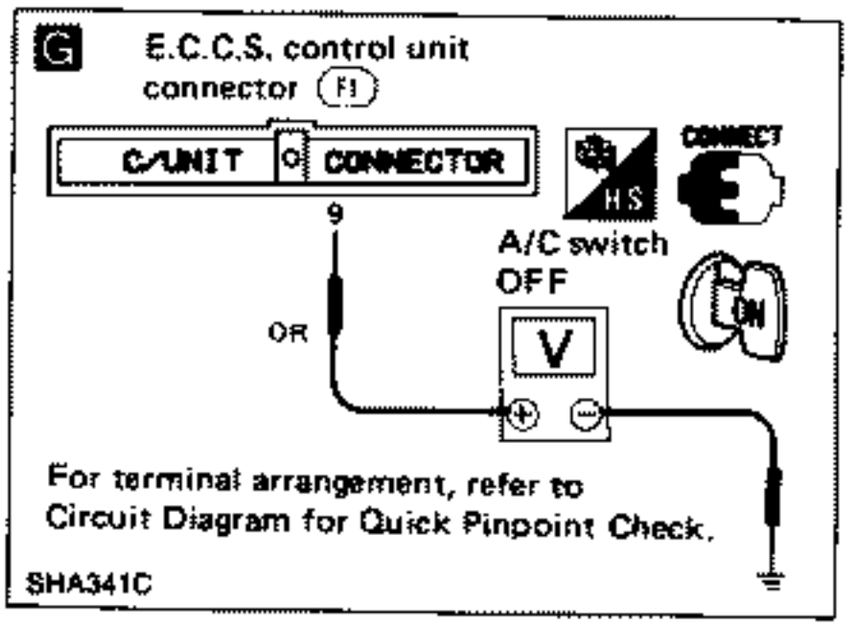

H

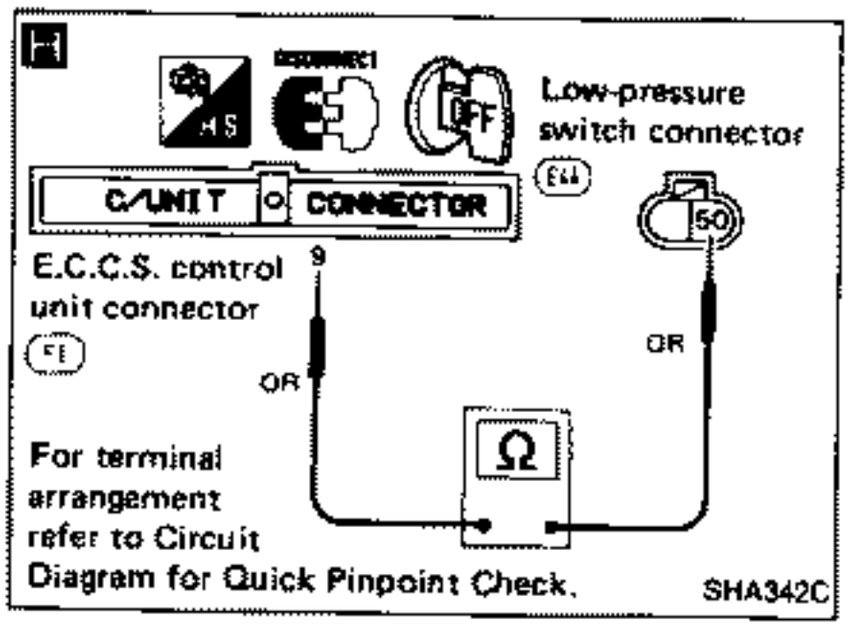

I

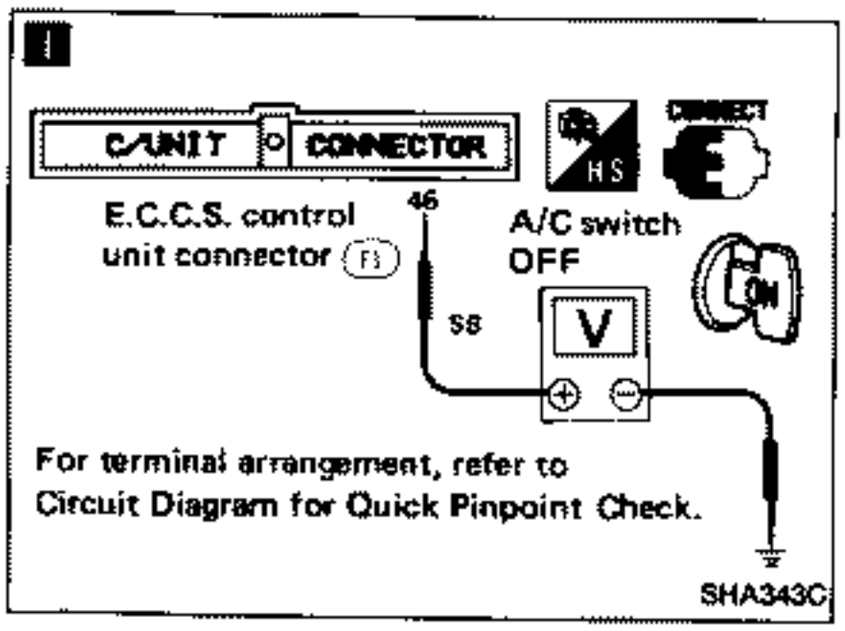

Ⓐ

E

CHECK COIL SIDE CIRCUIT OF A/C RELAY.
Do approximately 12 volts exist between low-pressure switch harness connector terminal No. (49) and body ground?

N.G. → F

Check circuit continuity between A/C relay harness connector terminal No. (51) and low-pressure switch harness connector terminal No. (49).

O.K. ↓

G

Do approximately 12 volts exist between E.C.C.S. control unit harness terminal No. (9) and body ground?

N.G. → H

Note

Check circuit continuity between low-pressure switch harness connector terminal No. (50) and E.C.C.S. control unit harness connector terminal No. (9).

O.K. ↓

Note

CHECK LOW-PRESSURE SWITCH.
(Refer to Electrical Components Inspection.)

N.G. ↓

Replace low-pressure switch.

O.K. ↓

I

Do approximately 8 to 9 volts exist between E.C.C.S. control unit harness connector terminal No. (46) and body ground?

N.G. → CHECK E.C.C.S. CONTROL UNIT.
(Refer to EF & EC section.)

O.K. ↓

Disconnect thermo control amp. harness connector.

O.K. ↓

Ⓑ

(Go to next page.)

Note:
If the result is N.G. after checking circuit continuity, repair harness or connector.

Diagnostic Procedure 4 (Cont'd)

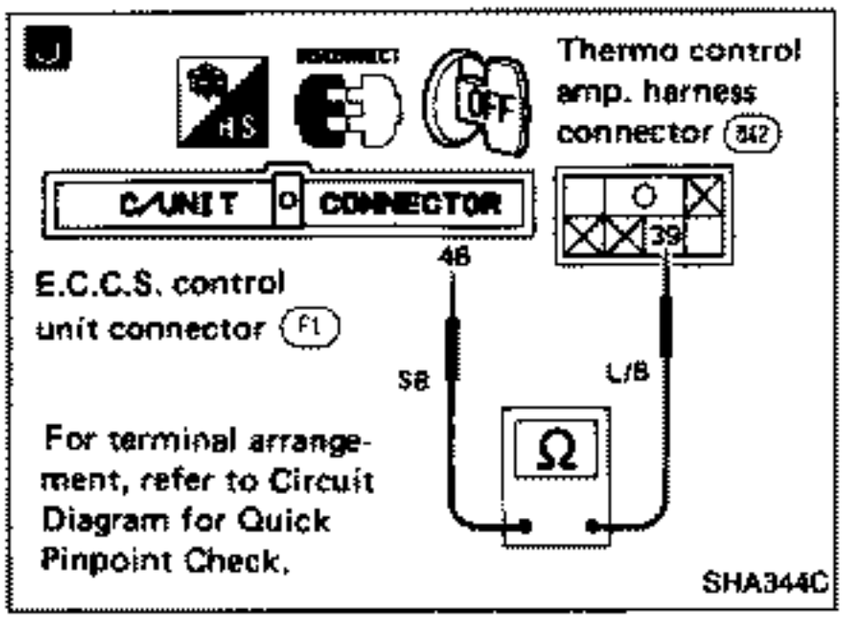

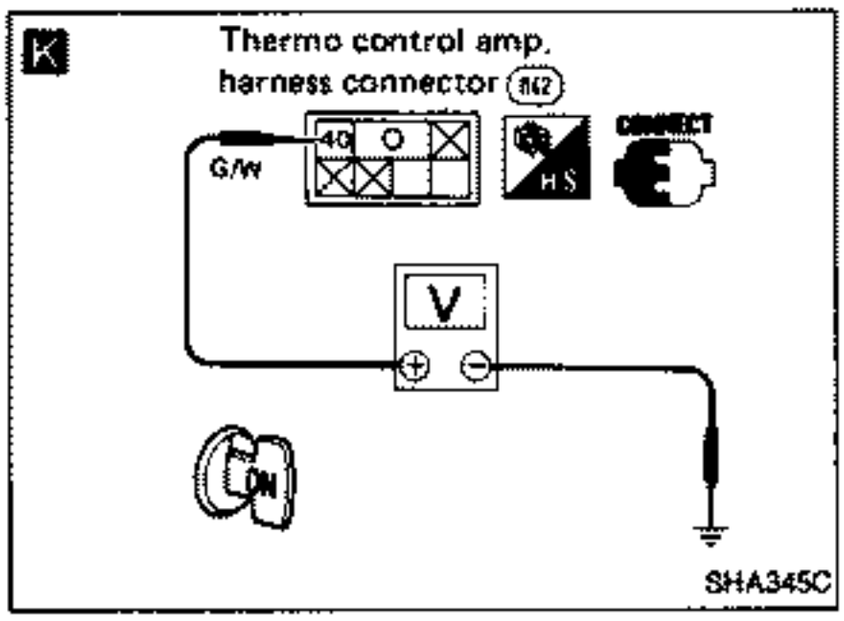

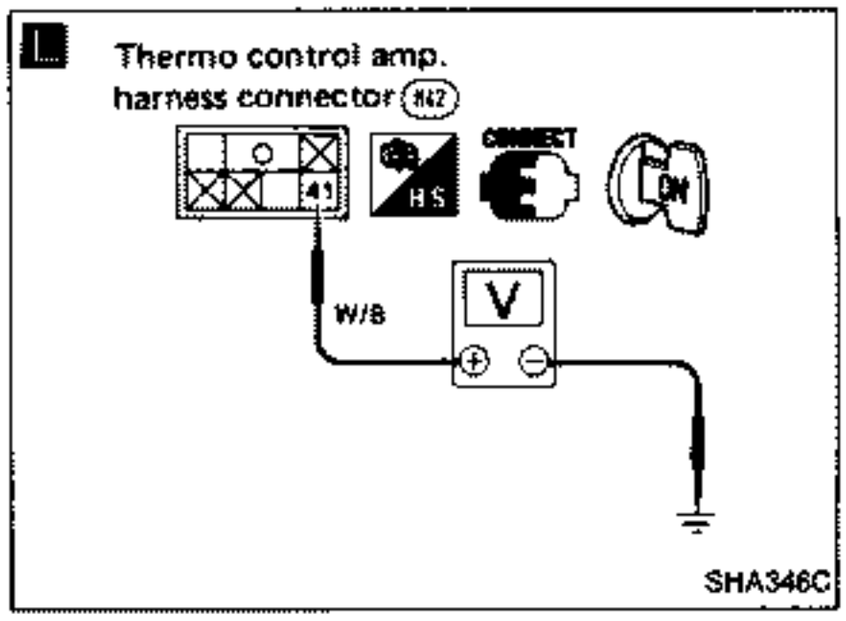

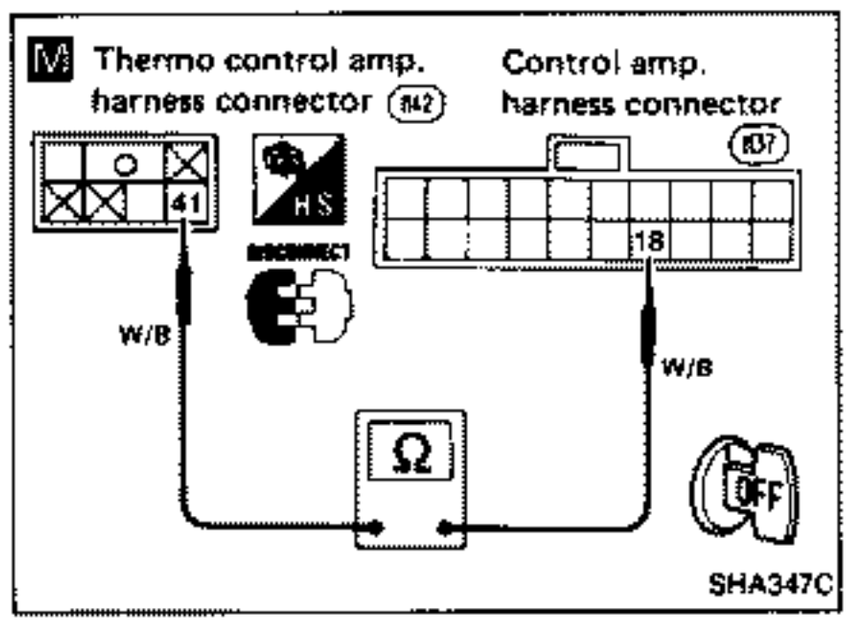

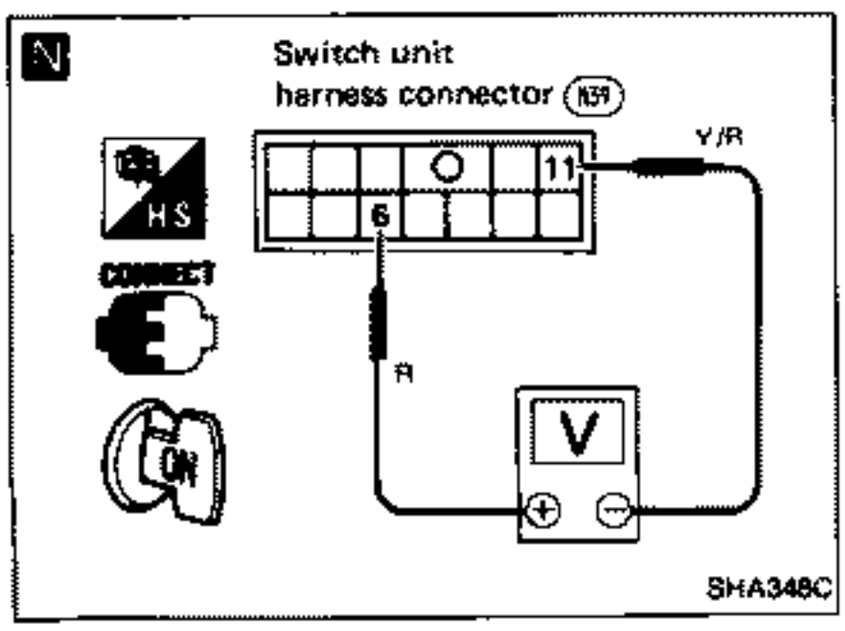

(B)

J Note

Check circuit continuity between thermo control amp. harness connector terminal No. (39) and E.C.C.S. control unit harness connector terminal No. (46).

O.K.

K

CHECK POWER SUPPLY FOR TEHRMO CONTROL AMP.
Do approximately 12 volts exist between thermo control amp. harness connector terminal No. (40) and body ground?

N.G. → CHECK POWER SUPPLY CIRCUIT AND FUSE AT FUSE BLOCK.
(Refer to "POWER SUPPLY ROUTING" in EL section and A/C ELECTRICAL CIRCUIT.)

O.K.

L

Is the voltage between thermo control amp. harness connector terminal No. (41) and body ground approximately 0V?

N.G. → Replace thermo control amp.

O.K.

M Note

Check continuity between thermo control amp. harness connector terminal No. (41) and control amp. harness connector terminal No. (18).

O.K.

N

CHECK A/C SWITCH OF SWITCH UNIT.
Check the voltage between switch unit harness connector terminals No. (6) and (11)

REC switch	Terminal No.		Voltage (Approx.)
	(12)	(11)	
Switch pressed	⊕	⊖	0V
Switch free			5V

N.G. → Disconnect switch unit connector.

O.K.

Replace control amp.

Ⓒ

(Go to next page.)

Note:
If the result is N.G. after checking circuit continuity, repair harness or connector.

Diagnostic Procedure 4 (Cont'd)

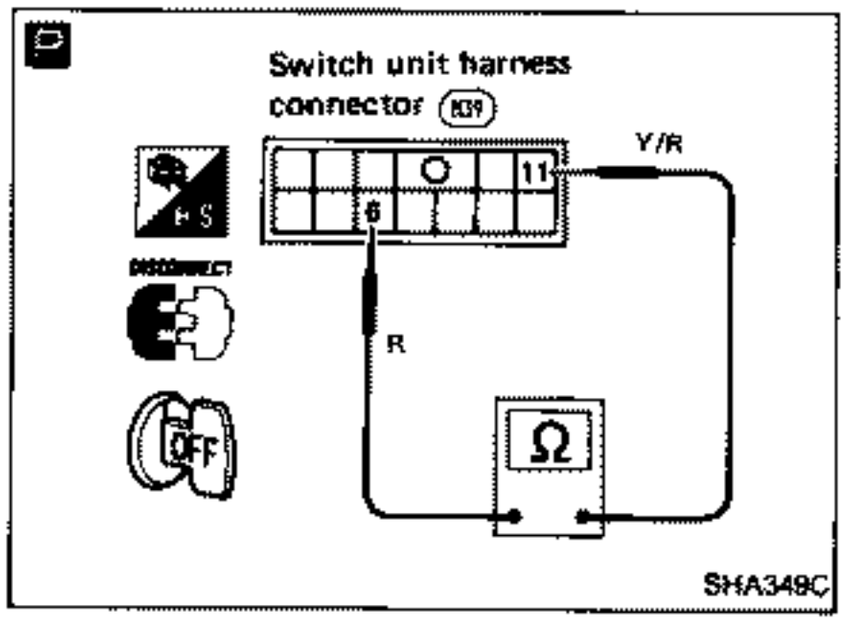

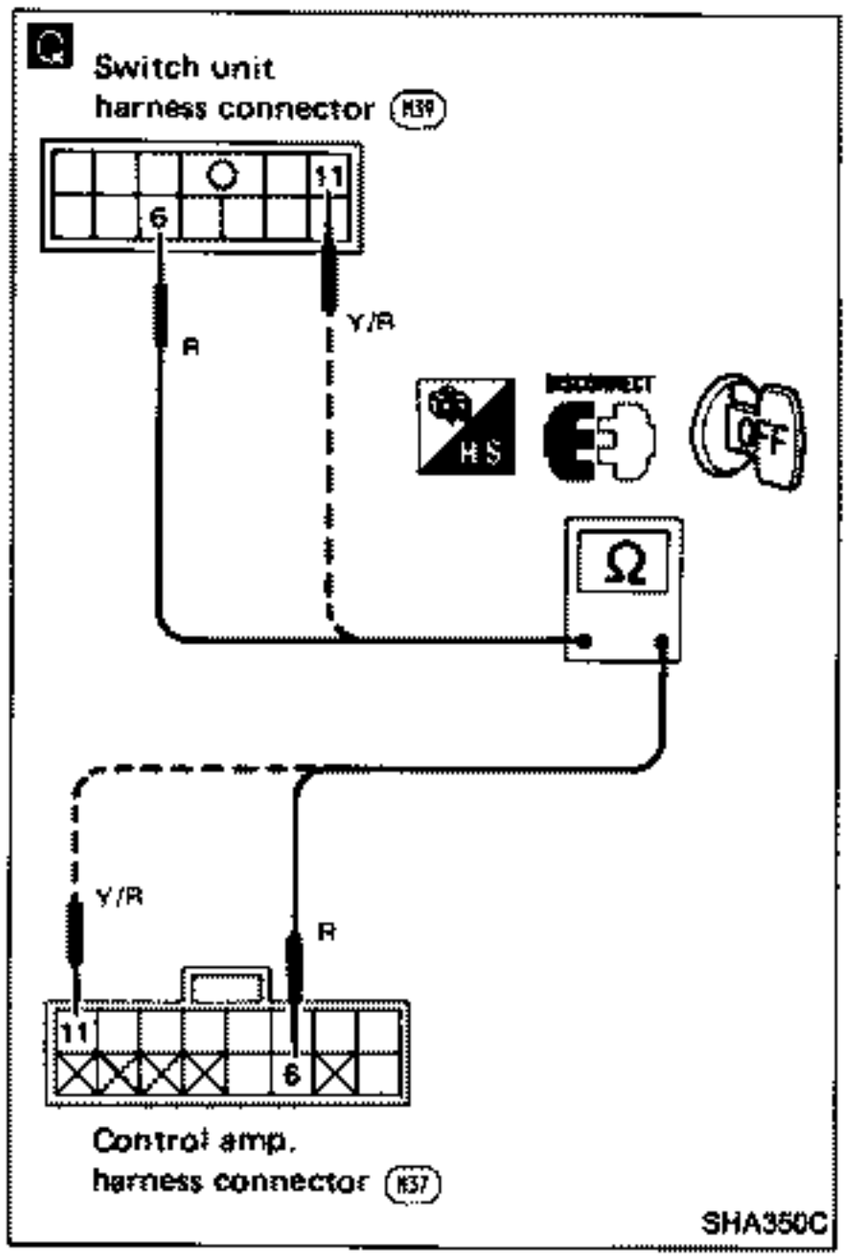

Ⓒ

Check circuit continuity between switch unit harness connector terminal No. ⑥ and ⑪.

N.G. → Replace switch unit.

A/C switch	Continuity between terminal No. ⑥ and ⑪
Switch pressed	Yes
Switch free	No

O.K.

Ⓓ Note

Check circuit continuity between switch unit harness connector terminal No. ⑥ (⑪) and control amp. harness connector terminal No. ⑥ (⑪).

O.K.

Replace control amp.

Note:
If the result is N.G. after checking circuit continuity, repair harness or connector.

Diagnostic Procedure 5

SYMPTOM: Illumination or control panel indicators do not come on.

- **Perform Main Power Supply and Ground Circuit Check before referring to the following flow chart.**

Turn ignition switch and lighting switch ON.

↓

CHECK ILLUMINATION AND INDICATORS.

- Turn A/C, REC and fan ON.
- Rotary VENT, B/L, FOOT, F/D and DEF switches in order.
- Check for incidents and follow the repairing methods as shown.

INCIDENT			How to repair
ILL Control panel	A/C	REC	
X	O	O	Go to DIAGNOSTIC PROCEDURE 5-1.
O	X	O	Go to DIAGNOSTIC PROCEDURE 5-2.
O	O	X	Go to DIAGNOSTIC PROCEDURE 5-3.
O	X	X	Go to DIAGNOSTIC PROCEDURE 5-4.

O: Illumination or indicator comes on.
X: Illumination or indicator does not come on.

Diagnostic Procedure 5 (Cont'd)

DIAGNOSTIC PROCEDURE 5-1

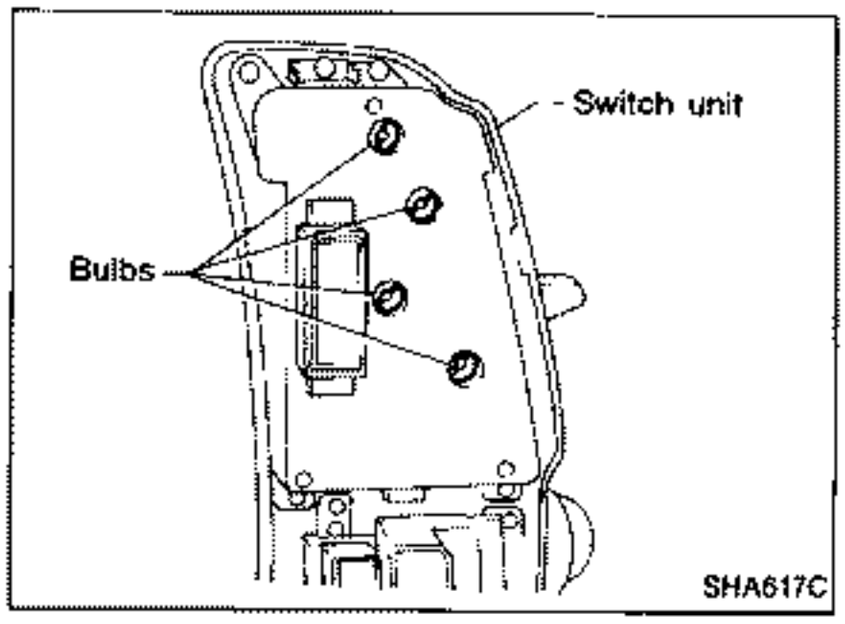

CHECK THE OTHER ILLUMINATION SYSTEMS EXCEPT FOR A/C SYSTEM.
Do the other illuminations come on with ignition switch and lighting switch ON?

N.G. → CHECK ILLUMINATION SYSTEM.
Refer to Illumination/Wiring Diagram in EL section.

O.K. ↓

Turn ignition switch and lighting switch OFF.

A

CHECK ILLUMINATION BULB.
Remove switch unit and disconnect harness connectors. Remove illumination bulb(s) and check them.

N.G. → Replace illumination bulb(s).

O.K. ↓

B

CHECK POWER SUPPLY FOR ILLUMINATION WITH LIGHTING SWITCH ON.
Do approximately 12 volts exist between switch unit connector harness terminal No. (f) and body ground?

N.G. → CHECK POWER SUPPLY FOR ILLUMINATION SYSTEM.
Refer to Illumination/Wiring Diagram in EL section.

O.K. ↓

CHECK TIME CONTROL SYSTEM.
Refer to TIME CONTROL SYSTEM in EL section.

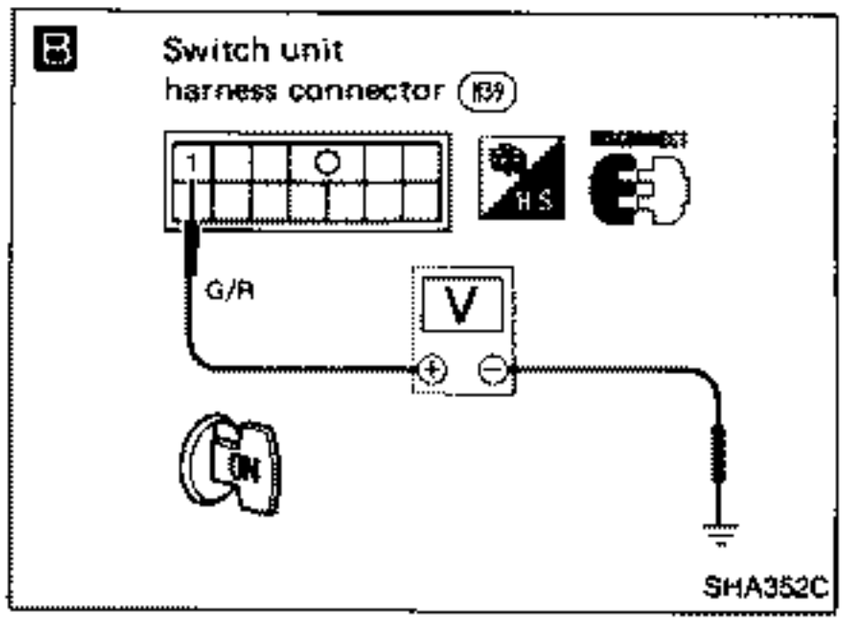

Diagnostic Procedure 5 (Cont'd)

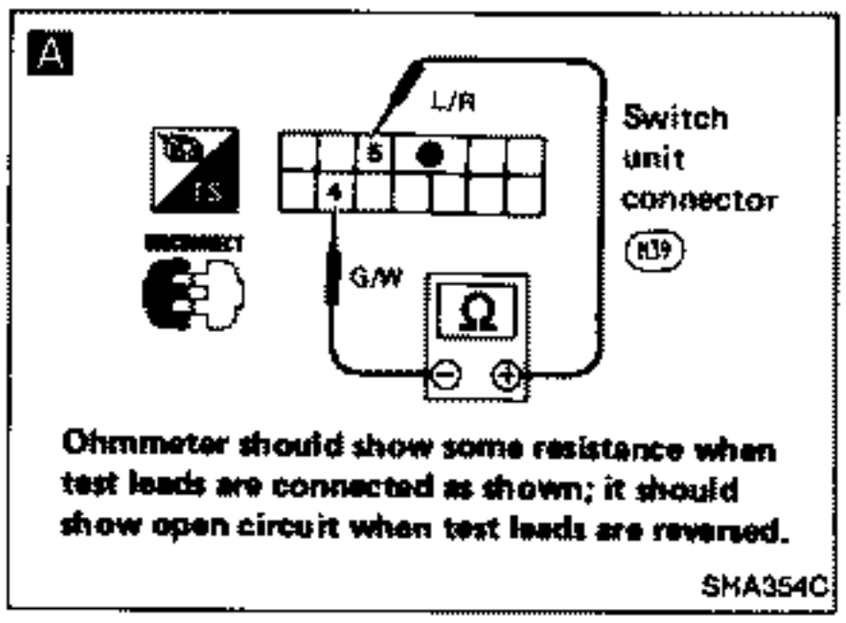

DIAGNOSTIC PROCEDURE 5-2

CHECK MAGNET CLUTCH OPERATION.
Does magnet clutch operate normally when engine is ON and A/C switch, fan switch are ON?

N.G. → Go to **Diagnostic Procedure 4.**

O.K. ↓

A

Check circuit continuity of L.E.D.

N.G. ↓

Replace switch unit.

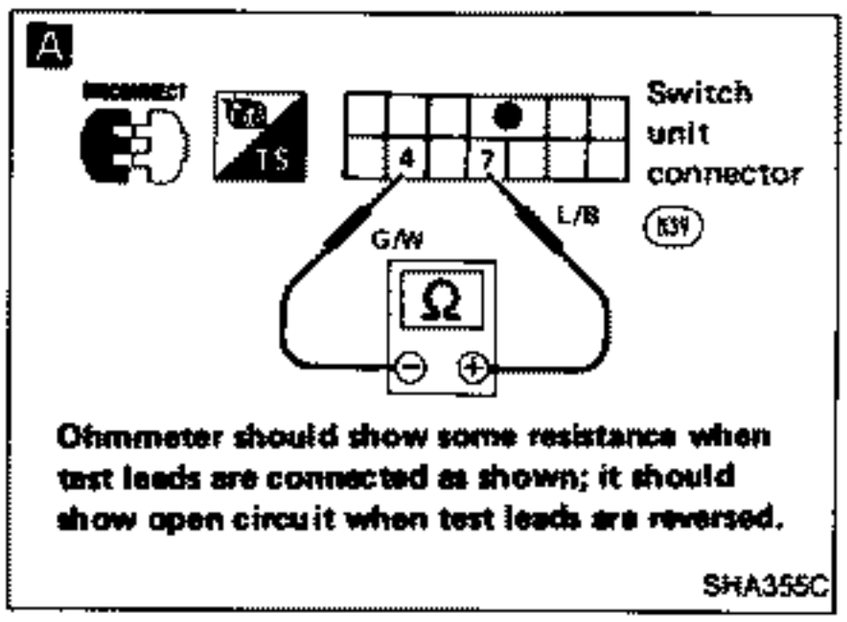

DIAGNOSTIC PROCEDURE 5-3

CHECK INTAKE DOOR OPERATION.
Does intake door operate normally when engine is ON and A/C switch, fan switch are ON?

N.G. → Go to **Diagnostic Procedure 3.**

O.K. ↓

A

Check circuit continuity of L.E.D.

N.G. ↓

Replace control panel.

Diagnostic Procedure 5 (Cont'd)

DIAGNOSTIC PROCEDURE 5-4

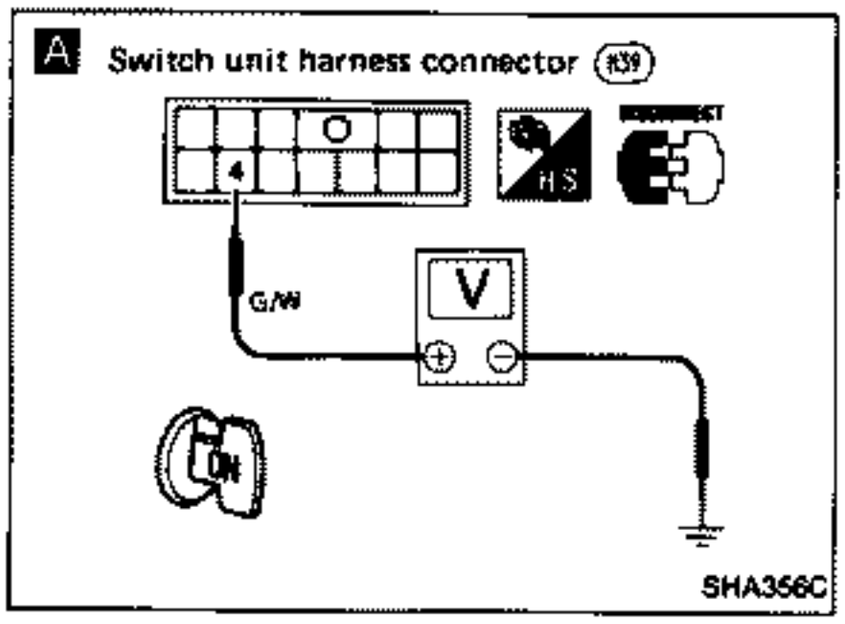

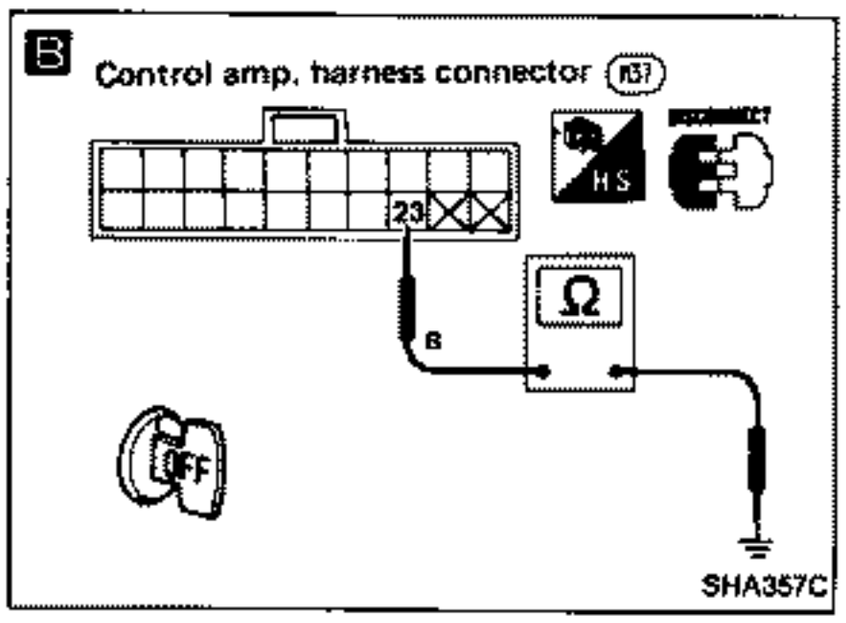

Turn ignition switch and lighting switch OFF.

↓

Disconnect switch unit harness connector.

↓

A

CHECK POWER SUPPLY FOR SWITCH UNIT
Do approximately 12 volts exist between switch unit harness connector terminal No. ④ and body ground?

N.G. → Check harness of switch unit power supply circuit. (Refer to "POWER SUPPLY ROUTING" in EL section and A/C ELECTRICAL CIRCUIT.)

O.K. ↓

B

CHECK BODY GROUND CIRCUIT FOR CONTROL AMP.
Does continuity exist between control amp. harness connector terminal No. ㉓ and body ground?

O.K. ↓

Replace control amp.

A

Control panel harness connector (M3)

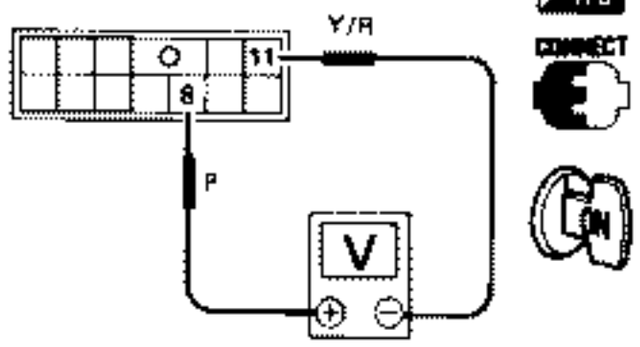

SHA521C

B

Control amp. harness connector (M7)

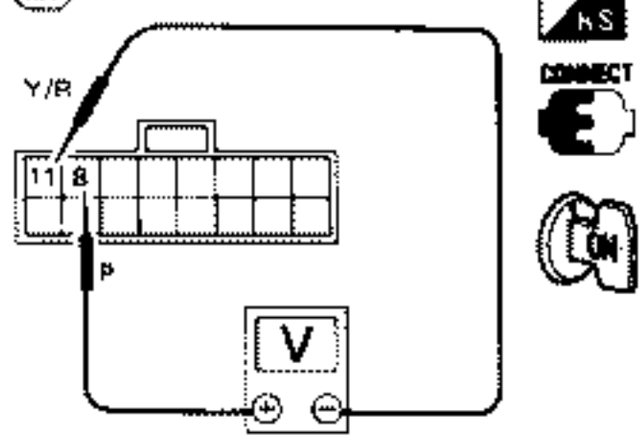

SHA522C

C

Control amp. harness connectors (M7)

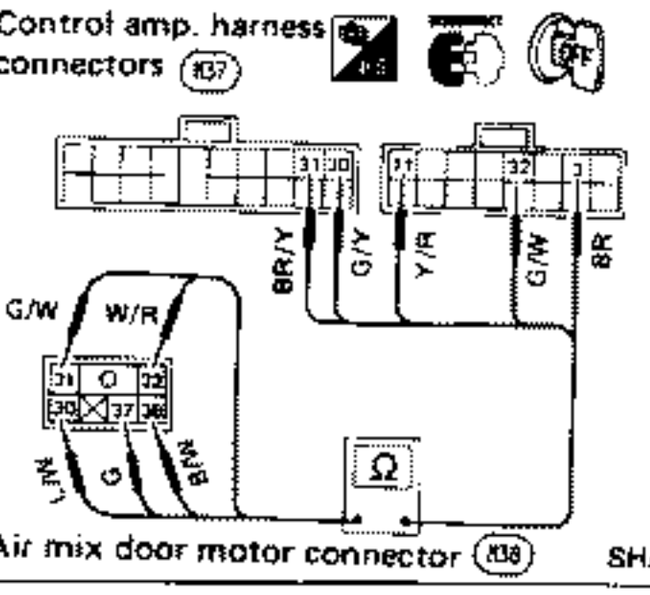

Air mix door motor connector (M38)

SHA523C

D

Control amp. harness connector (M7)

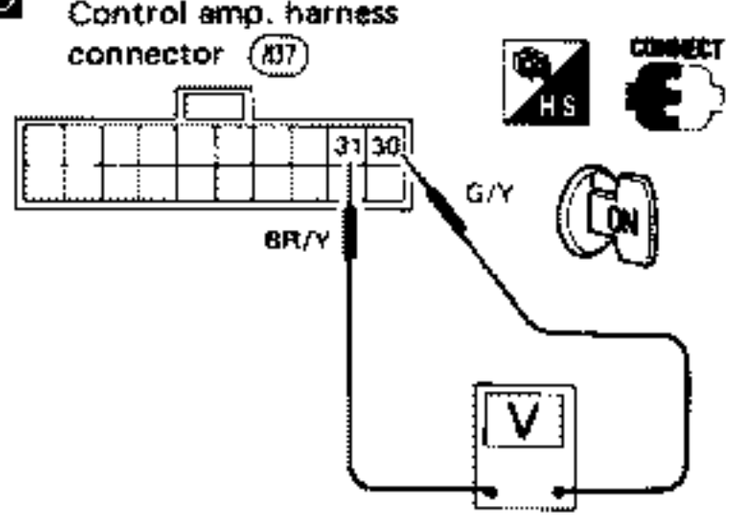

SHA524C

E

Control panel harness connector (M1)

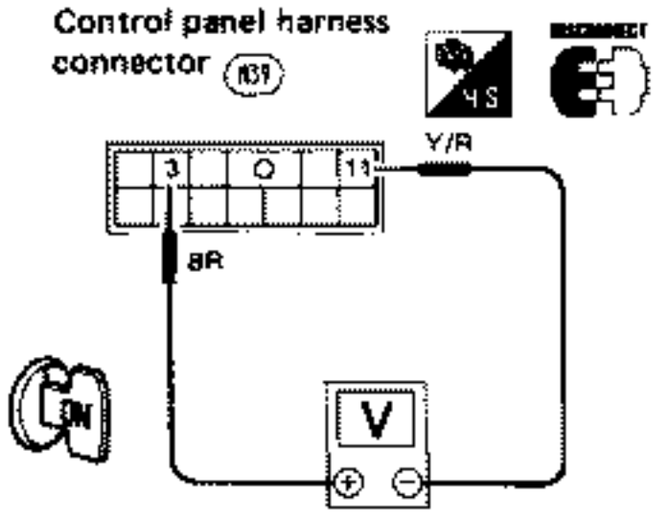

SHA525C

Diagnostic Procedure 6

SYMPTOM: Temperature of air outlet does not change.

A

CHECK TEMPERATURE CONTROL LEVER.
Measure voltage between control panel harness connector terminals No. ⑧ and ⑪.

Temp. control lever	Terminal No. ⊕	Terminal No. ⊖	Voltage (approx.)
Full hot	⑧	⑪	5V
Full cold			0V

N.G. → Disconnect control amp. harness connector.

E

Check if approximately 5 volts exist between control panel harness connector terminals No. ③ and ⑪.

N.G. → Replace control amp.

O.K. → Ⓐ (Go to next page.)

O.K. → B

B

Measure voltage between control amp. harness connector terminals No. ⑧ and ⑪.

Temp. control lever	Terminal No. ⊕	Terminal No. ⊖	Voltage (approx.)
Full hot	⑧	⑪	5V
Full cold			0V

O.K. → C

C

Check continuity between each terminal of control amp. and air mix door motor.

Terminal No. Control amp.	Terminal No. Air mix door motor	Continuity
㉚	㉚	Yes
㉛	㉛	
③	㊲	
㉜	㉜	
⑪	㊱	

N.G. → Repair harness or connector.

O.K. → D

D

CHECK FOR CONTROL AMP. OUTPUT.
Check if 12 volts exist between control amp. harness connector terminals No. ㉚ and ㉛ when temp. control lever is moved.

Terminal No.		Air mix door motor: Air mix door operation	Air mix door motor: Direction of linkage rotation
㉚	㉛		
⊖	⊖	Stop	Stop
⊖	⊕	Cold → Hot	Counter-clockwise
⊕	⊖	Hot → Cold	Clockwise

N.G. → Replace control amp.

O.K. → Replace air mix door motor.

Diagnostic Procedure 6 (Cont'd)

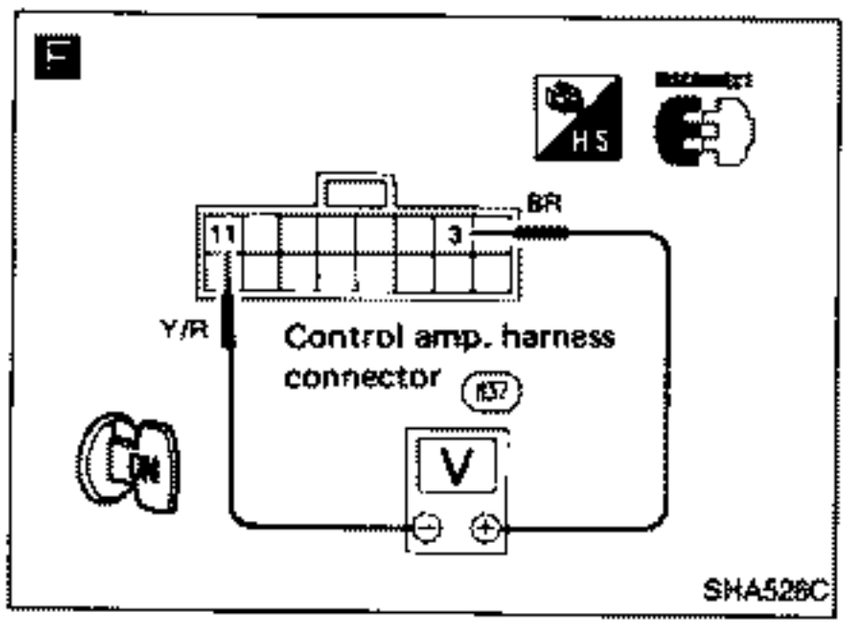

F

Ⓐ

Check if approximately 5 volts exist between control amp. harness connector terminals No. ③ and ⑪.

N.G. → Replace control amp.

O.K. ↓

Repair harness or connector.

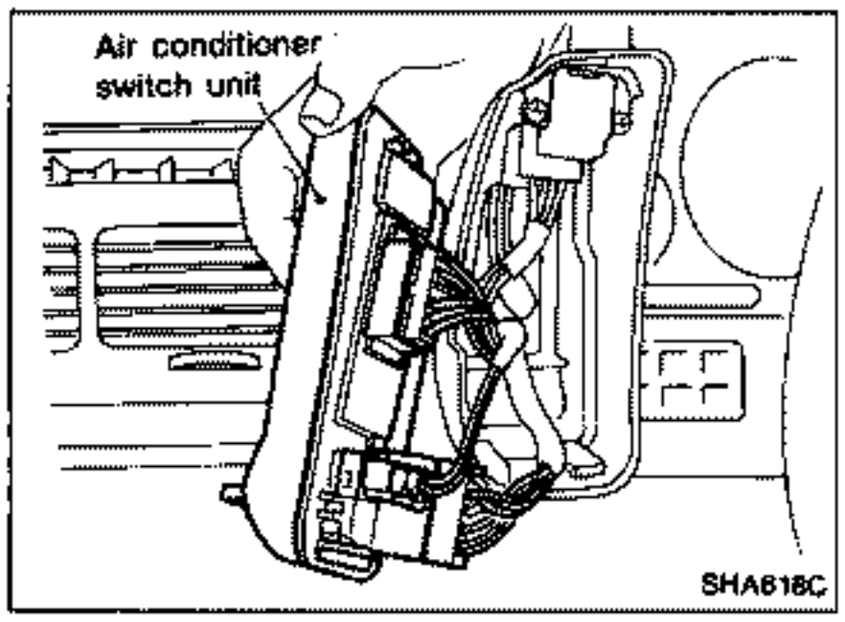

Electrical Components Inspection

FAN SWITCH

Check resistance between terminals at each switch position.

Switch position	Resistance between terminals No. ③ and ⑩ (Approx. Ω)
OFF	710
1	1,140
2	460
3	270
4	0

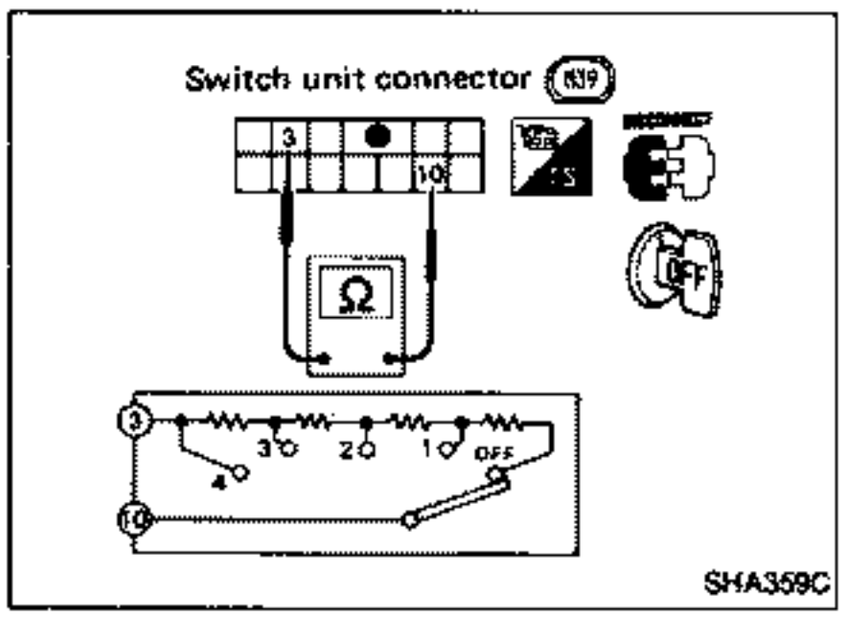

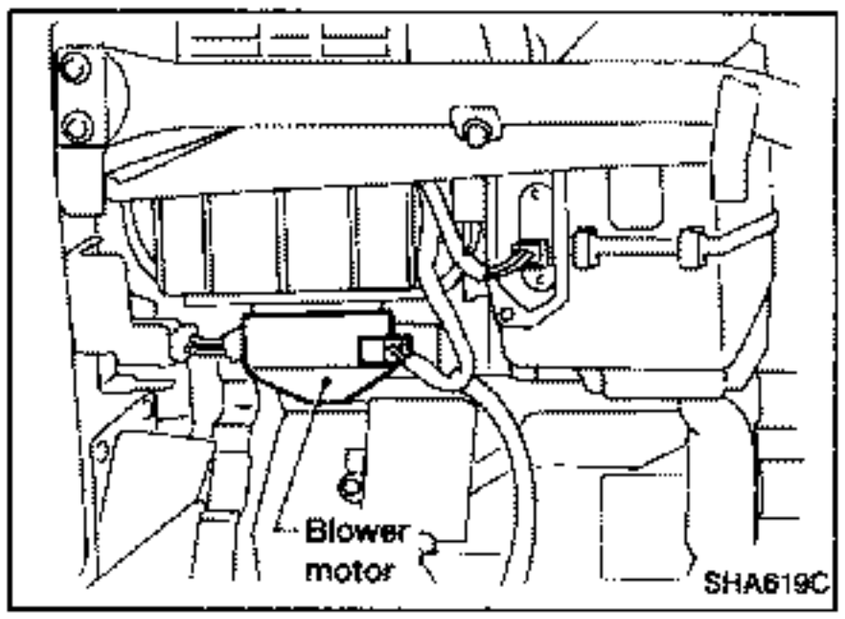

BLOWER MOTOR

Confirm smooth rotation of the blower motor.

- Ensure that there are no foreign particles inside the intake unit.

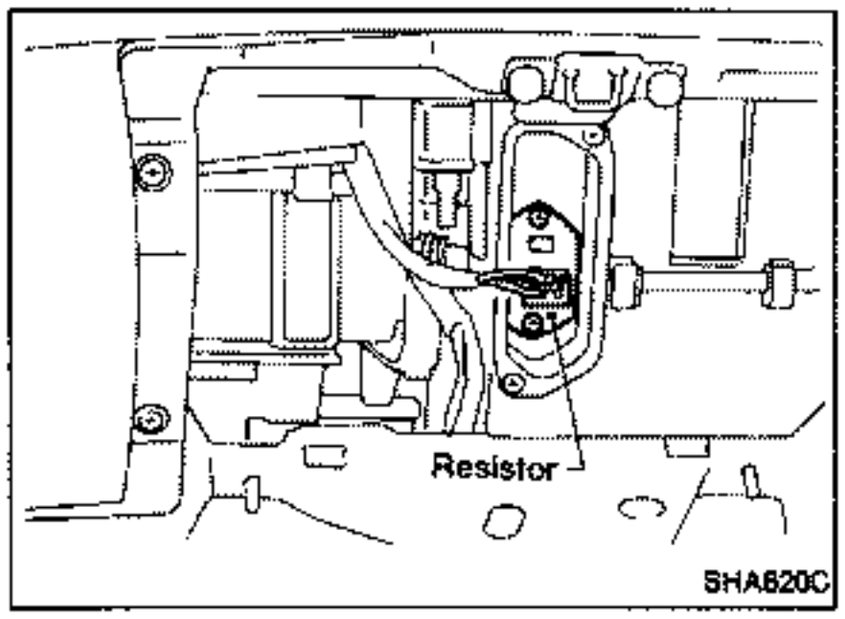

BLOWER RESISTOR

Check continuity between terminals.

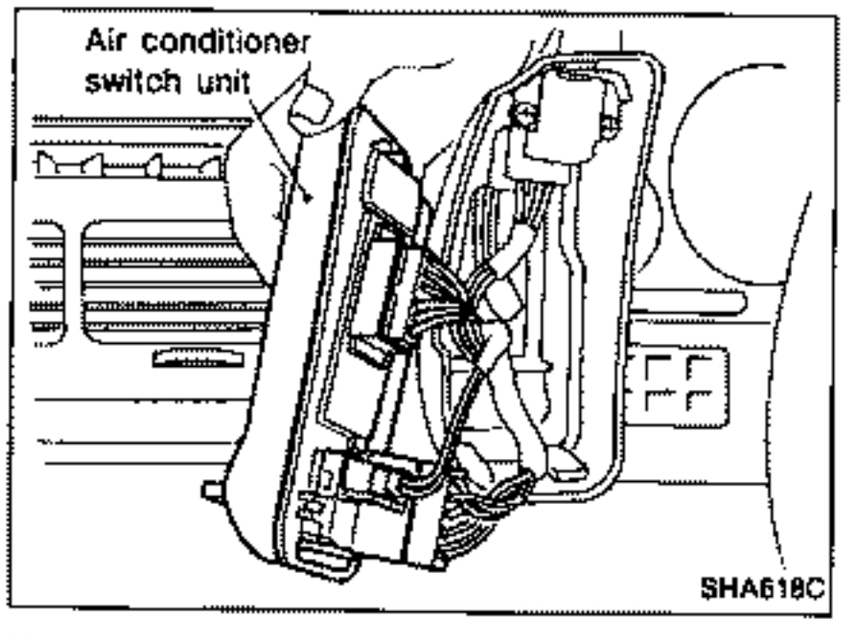

Electrical Components Inspection (Cont'd)

A/C SWITCH

Check continuity between terminals at each switch position.

Switch condition	Terminal No.		Continuity
While A/C switch is pushed	⑥	⑪	Yes
While REC switch is pushed	⑫	⑪	Yes

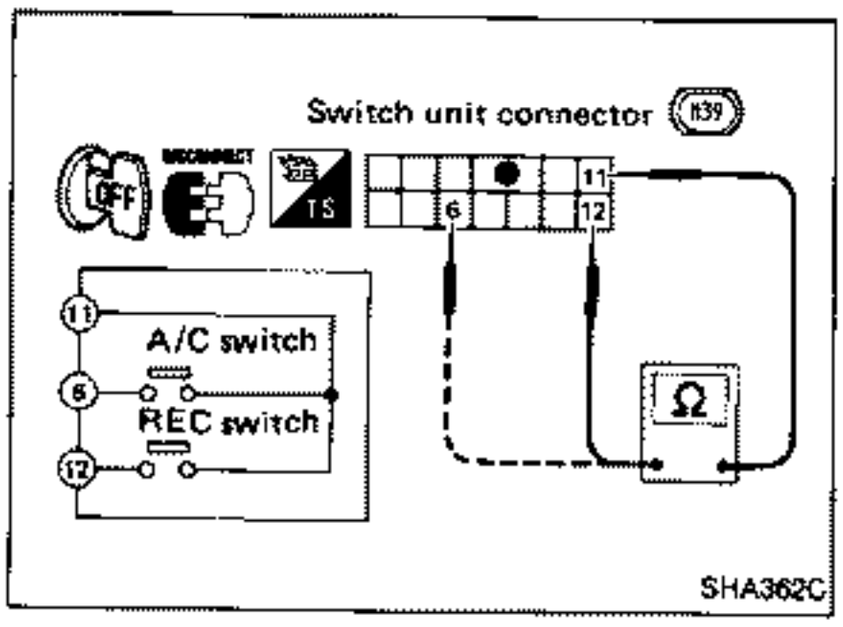

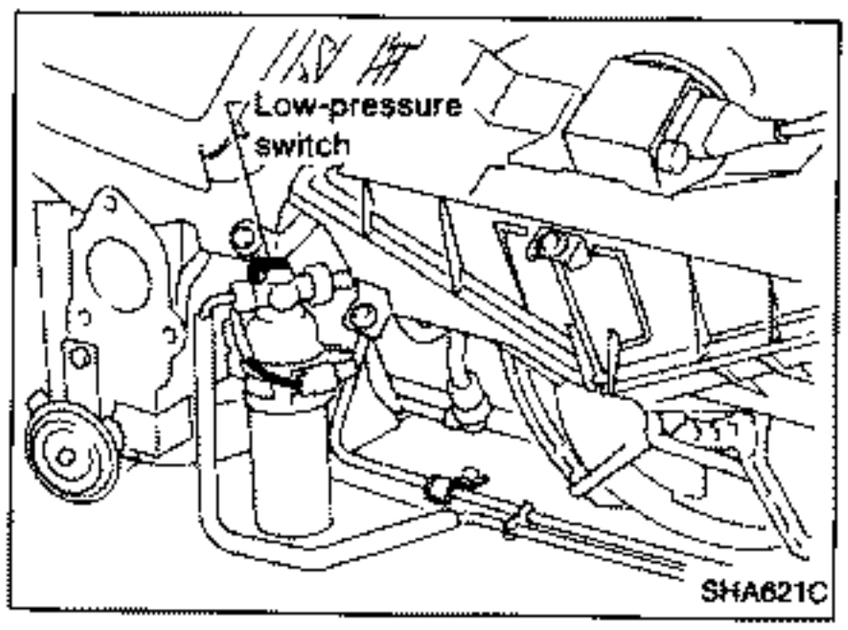

LOW-PRESSURE SWITCH

High-pressure side line pressure kPa (bar, kg/cm², psi)	Operation	Continuity
196 (1.96, 2.0, 28)	Turn OFF	Does not exist
206 (2.06, 2.1, 30)	Turn ON	Exist

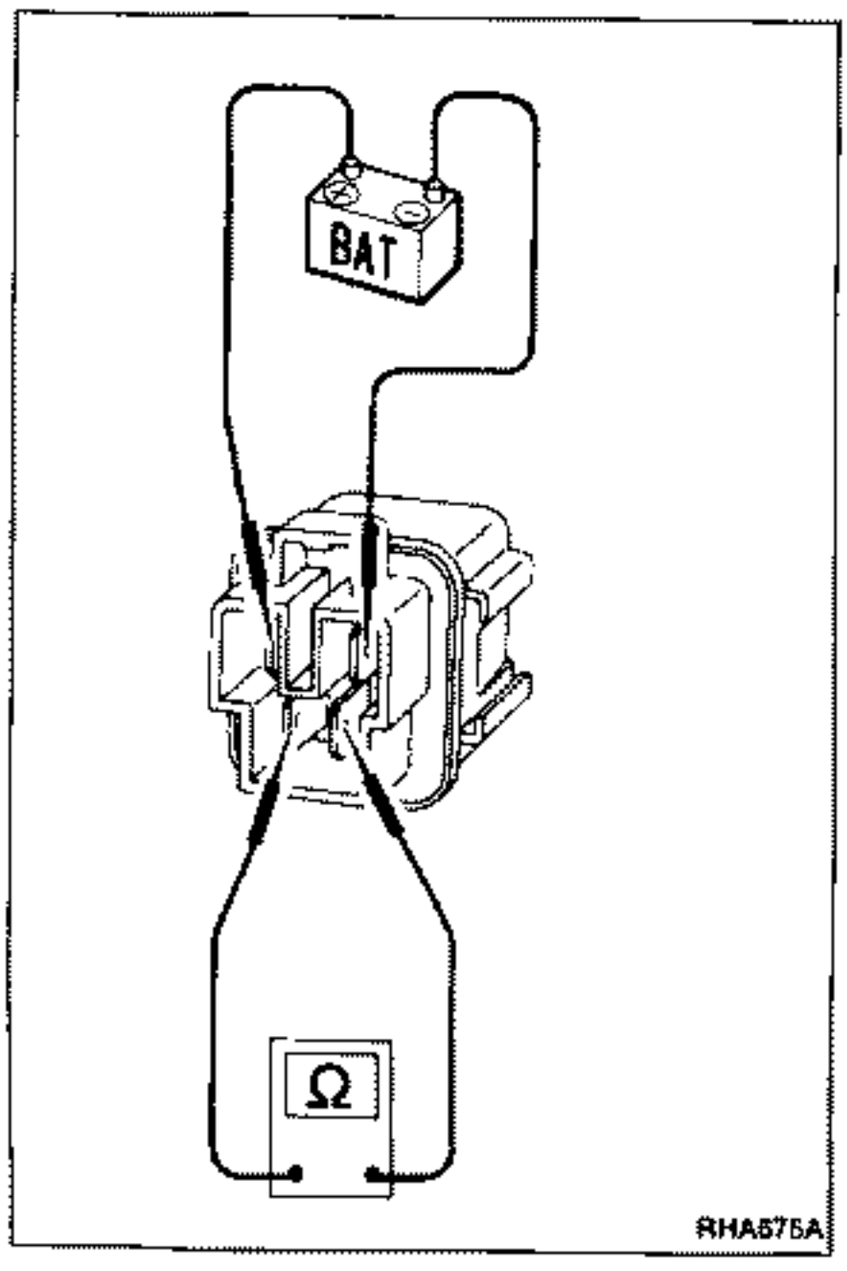

RELAY

Check circuit continuity between terminals by supplying 12 volts to coil side terminal of relay.

Electrical Components Inspection (Cont'd)

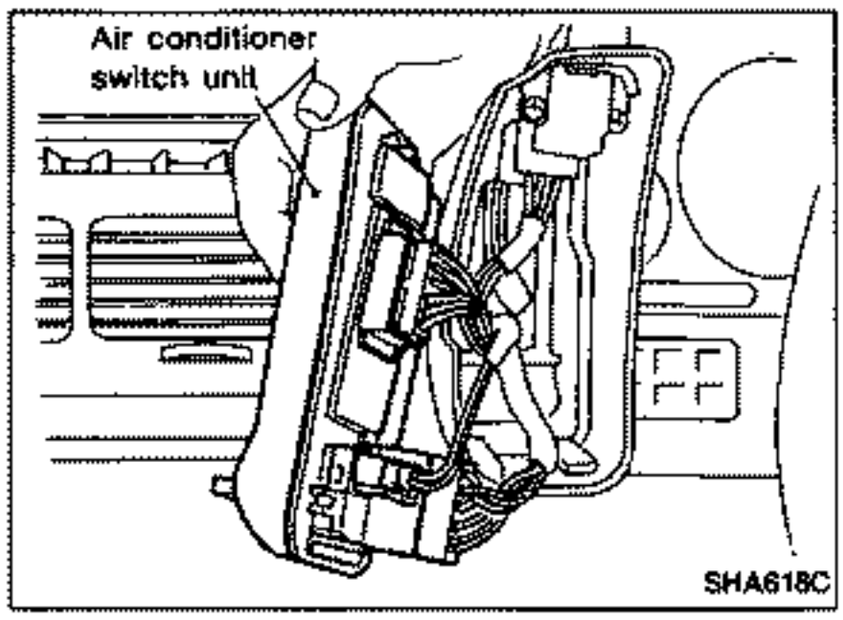

MODE SWITCH

Check resistance between terminals at each switch position.

Switch position	Resistance between terminals No. ⑨ and No. ③ (Ω)
VENT	0
B/L	270
FOOT	460
FOOT/DEF	1,140
DEF	710

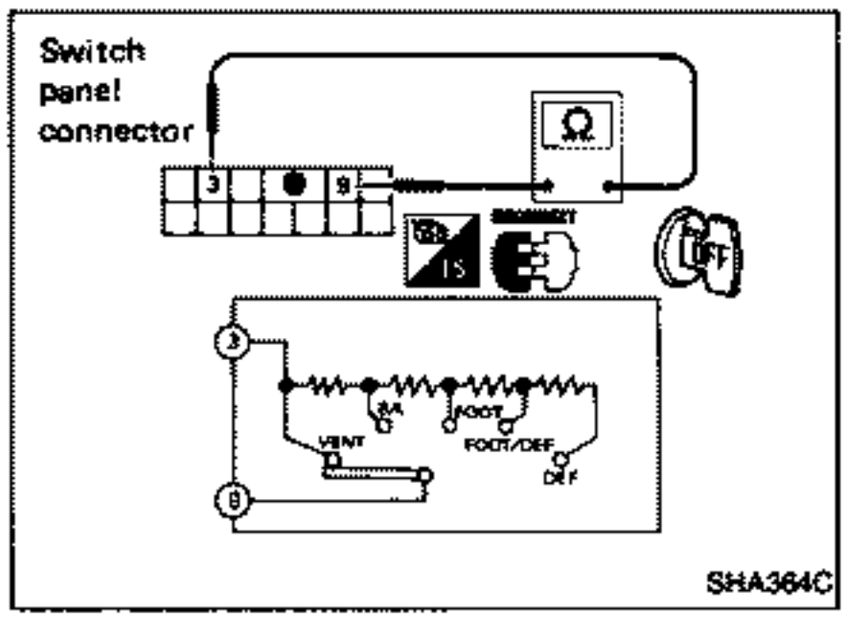

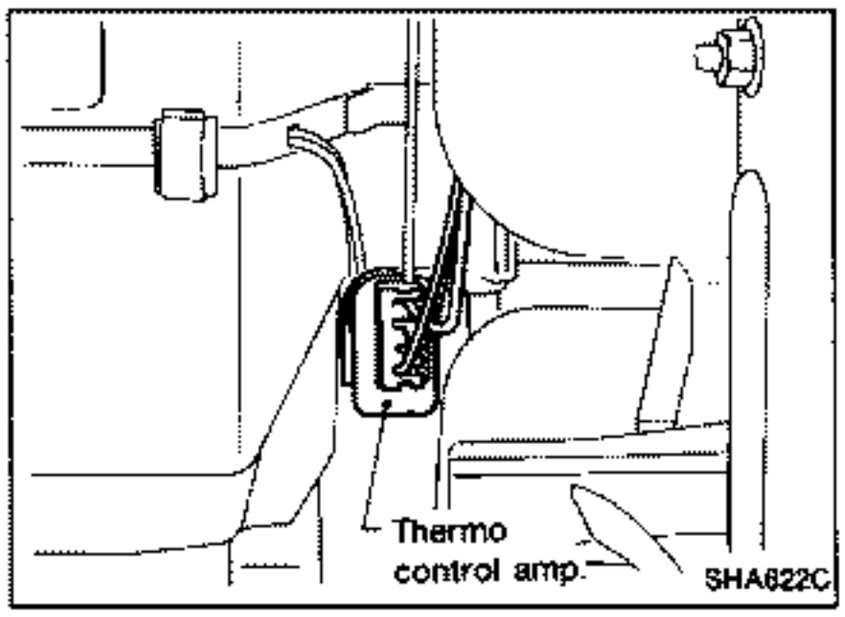

THERMO CONTROL AMP.

1. Run engine and operate A/C system.
2. Connect the voltmeter from harness side.
3. Check thermo control amp. operation shown in the table.

Evaporator outlet air temperature °C (°F)	Thermo control amp. operation	Voltage (Approx.)
Decreasing to 3.0 (37)	Turn OFF	12V
Increasing to 4.5 (40)	Turn ON	0V

Features

OUTLET AIR TEMPERATURE CONTROL (Air mix door control)

When the desired temperature is set on the control panel, the automatic temperature control system determines both the head and foot target temperatures, as well as target upper (VENT and DEF) and lower (FOOT) outlet air temperatures. This computation is accomplished in relation to the desired temperature, and outside conditions (ambient temperature and sunload). The automatic temperature control system then controls the air mix door position so that the outlet air temperatures meet target* outlet air temperatures.

A summary of the automatic temperature control system is as follows:

1. The upper and lower air temperatures are independently controlled to provide a comfortable ride.
2. Optimum outlet air temperatures can be set to the passenger's preference.
3. Outlet air temperature feedback control through duct sensors permits a "potentiometerless" air mix door design. It requires no adjustment, increases service life and improves performance reliability.

FAN SPEED CONTROL

The A.T.C. system continuously regulates fan speed according to the difference between the target temperature and the temperatures detected at the upper and lower in-vehicle sensors. The greater the difference between the temperatures the higher the blower speed. If the cabin sunload or ambient temperature is high, fan speed will be increased.

INTAKE DOOR CONTROL

The A.T.C. system adjusts the intake door position once every sixty seconds. The system is programmed to take in outside air as much as possible.

OUTLET DOOR CONTROL

The A.T.C. system controls distribution of air through the VENT, DEF and FOOT outlets based on the cabin sunload, ambient temperature and the set temperature.

COMPRESSOR MAGNET CLUTCH CONTROL

The A.T.C. system automatically shuts off the compressor at temperatures lower than 0°C (32°F).

SELF-DIAGNOSTIC SYSTEM

The A.T.C. system contains an on-board diagnostic system which can be used to check the A.T.C. system sensors and motors and any trouble data stored in the memory.
Pushing the "AUTO" and "OFF" switches at the same time for more than 5 seconds will give the self-diagnostic mode. There are 4 kinds of self-diagnostic systems (STEP 1 to STEP 4). Each step can be accessed by pushing the "AUTO" switch. The functions of each step are as follows:

- STEP 1 — Monitor diagnosis
- STEP 2 — Actuator test
- STEP 3 — Change of difference between upper and lower target temperature
- STEP 4 — Readout of trouble data memory

***: Target temperature**

When a temperature for the cabin is set using the TEMP. SET switch, the A.T.C. system calculates an initial target temperature based on information from the various A.T.C. system sensors. This target temperature is continuously updated to bring the cabin temperature to the set temperature in the most comfortable way possible for the occupants. (The program for this was made after careful study of comfort levels related to car interiors).

Switch Functions on Control Unit

AUTO SWITCH	
INTAKE DOOR POSITION	AUTOMATIC CONTROL
OUTLET DOOR POSITION	
AIR MIX DOOR POSITION	
FAN SPEED	
COMPRESSOR	ON [outside air temperature above 0°C (32°F)]
REMARKS	Fan speed can be set at "HI" or "LO".

OFF SWITCH	
INTAKE DOOR POSITION	OUTSIDE AIR
OUTLET DOOR POSITION	AUTOMATIC CONTROL
AIR MIX DOOR POSITION	
FAN SPEED	OFF
COMPRESSOR	OFF
REMARKS	REC switch can be set.

DEF SWITCH	
INTAKE DOOR POSITION	OUTSIDE AIR
OUTLET DOOR POSITION	DEFROSTER
AIR MIX DOOR POSITION	AUTOMATIC CONTROL
FAN SPEED	AUTOMATIC CONTROL
COMPRESSOR	ON [outside air temperature above 0°C (32°F)]
REMARKS	Fan speed can be set at "HI" or "LO".

TEMP. SET SWITCH
Each time corresponding switch is pressed, set temperature is increased or decreased by 1°F. When it is pressed for more than 0.5 seconds, set temperature can be continuously changed.

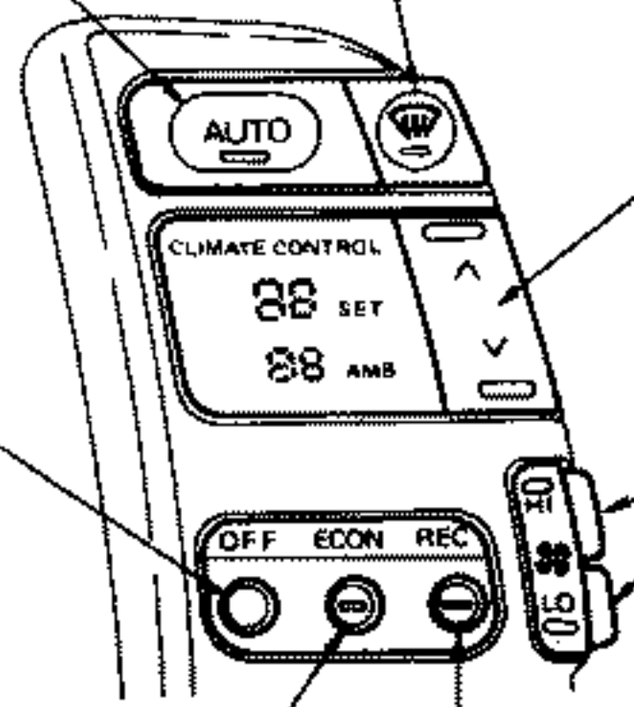

FAN SPEED FIXING SWITCH		
INDICATOR	HI	LO
FAN SPEED	HI SPEED	LO SPEED
Each function is cancelled when corresponding switch is pressed again.		

ECON SWITCH		
INDICATOR	ON	OFF
INTAKE DOOR POSITION	OUTSIDE AIR	AUTOMATIC CONTROL
COMPRESSOR	OFF	ON [outside air temperature above 0°C (32°F)]
REMARKS	"ECON" switch does not function when compressor is "OFF" and DEF switch is "ON". "ECON" switch function is also cancelled when pressed again.	

RECIRC SWITCH		
INDICATOR	ON	OFF
INTAKE DOOR POSITION	RECIRCULATED AIR	AUTOMATIC CONTROL
REMARKS	Recirculation mode changes to automatic control mode ten minutes after "RECIRC" switch is turned "ON". "RECIRC" switch does not function when compressor is "OFF" or when it is in "ECON" or "DEF" mode. Recirculation function is cancelled when "RECIRC" switch is pressed again.	

Specifications

AUTO AMPLIFIER

The auto amplifier has a built-in microcomputer which processes information from the A.T.C. system sensors. Signals are sent from the auto amplifier to activate the A.T.C. system depending upon the information sent by these sensors and the set temperature selected on the switch panel.
The A.T.C. system's self-diagnostic capabilities are built into the auto amplifier.

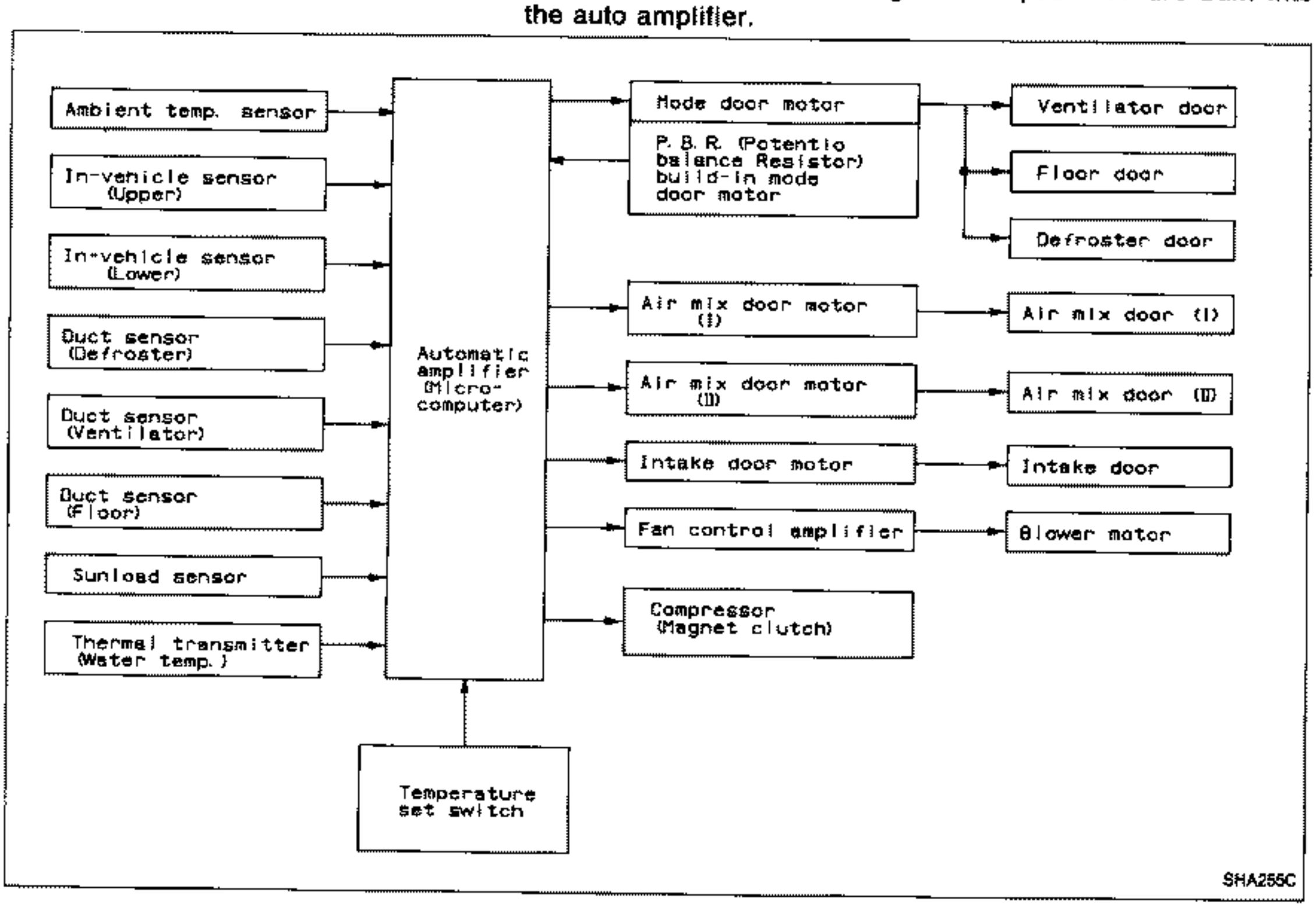

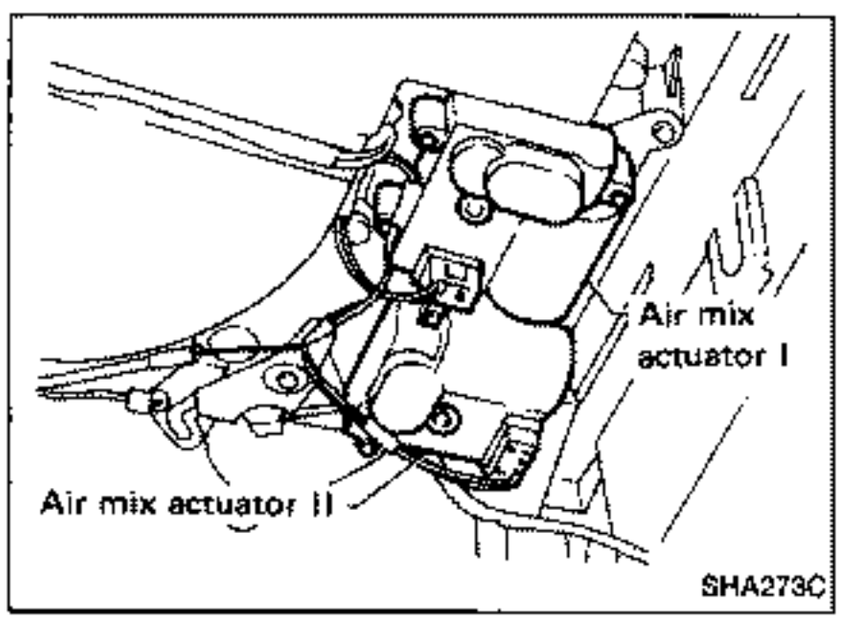

Specifications (Cont'd)

AIR MIX DOOR I and II MOTORS

Component and related parts

- Auto amplifier
- Air mix door motors
- In-vehicle sensors (upper and lower)
- Duct sensors (vent, floor, defroster)
- Ambient sensor
- sunload sensor

Operation of air mix door I and II motors

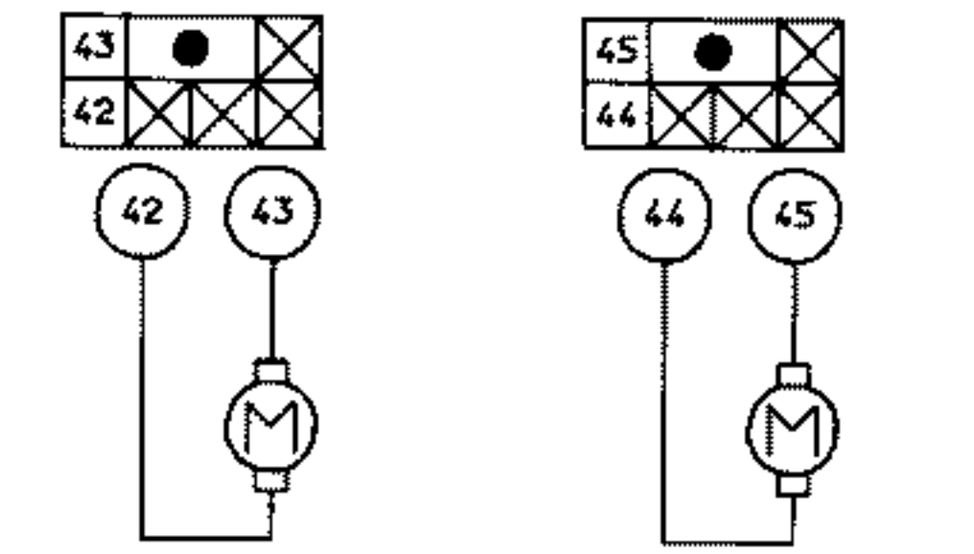

㊷ ㊹	㊸ ㊺	Air mix door I and II operation	Direction of lever movement
⊖	⊕	COLD → HOT	*Clockwise
⊖	⊖	STOP	STOP
⊕	⊖	HOT → COLD	*Counterclockwise

*:

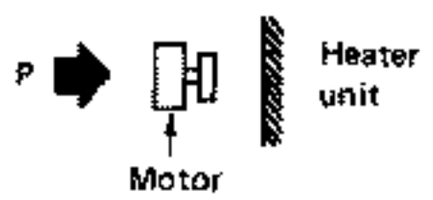

"Direction of lever movement" is as viewed from arrow P

SHA274C

System operation

The air mix door motors are attached to the bottom of the heater unit. The motors rotate, moving a lever system which varies the air mix door position to heat or cool the inlet air. Outlet air temperature is measured by the duct sensors, signals from which are sent to the auto amplifier which uses them to modify the air mix door position to achieve the current target temperature.

- **It takes about 1 minute to stabilize duct air temperature.**
- **When ambient temperature is below 5°C (41°F) or above 60°C (140°F), air mix door position is fixed.**

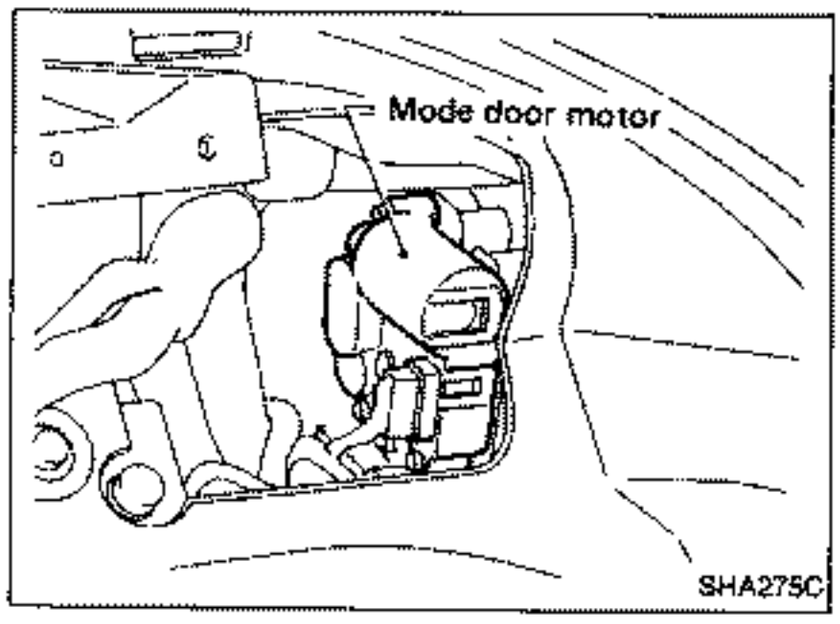

Specifications (Cont'd)

MODE DOOR MOTOR

Component and related parts

- Auto amplifier
- Mode door motor with potential ballast resister (P.B.R.)
- Lower in-vehicle sensor
- Ambient sensor
- Sunload sensor

Mode door motor operation

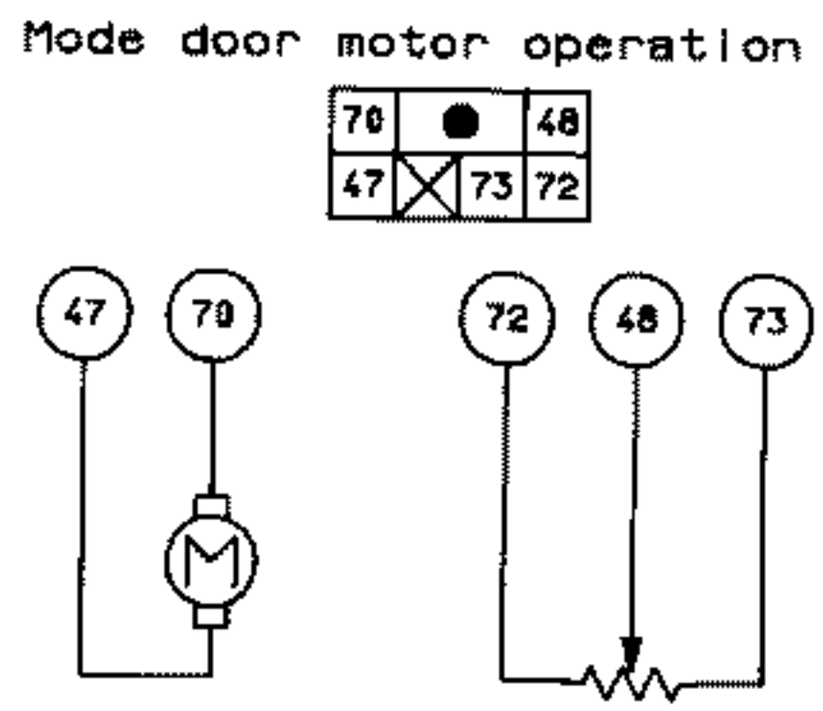

㊼	㊿	Mode door operation	Direction of side link rotation
⊖	⊕	VENT → DEF	Clockwise
⊖	⊖	STOP	STOP
⊕	⊖	DEF → VENT	Counterclockwise

System operation

The mode door motor is attached to the heater unit. The motor operates a cam assembly which moves the air outlet doors. The auto amplifier controls air distribution to the VENT, DEF and FOOT outlets. Outlet door position is conveyed to the auto amplifier by the P.B.R. built into the mode door motor.
The auto amplifier computes air outlet conditions according to ambient temperature, set temperature and sunload. When thermal loads are great, the air outlet computation is additionally influenced by the foot area temperature. The air outlet positions are smoothly adjusted in response to changes in ambient temperatures.
When the set temperature is decreased or when the sunload is increased, the air flow volume from the vent outlets is increased.

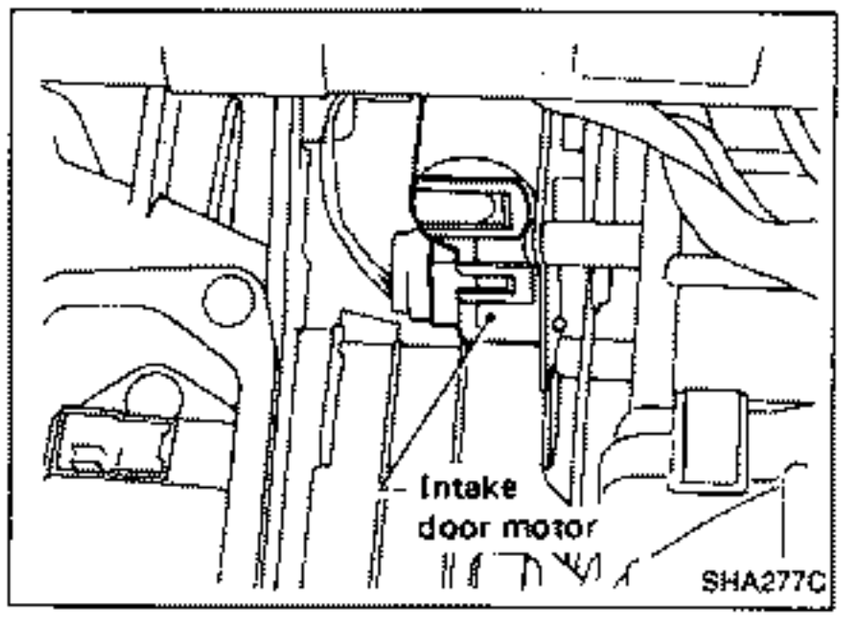

Specifications (Cont'd)

INTAKE DOOR MOTOR

Component and related parts

- Auto amplifier
- Intake door motor
- Upper in-vehicle sensor
- Vent duct sensor
- Ambient sensor
- Sunload sensor

Intake door operation

Intake door operation

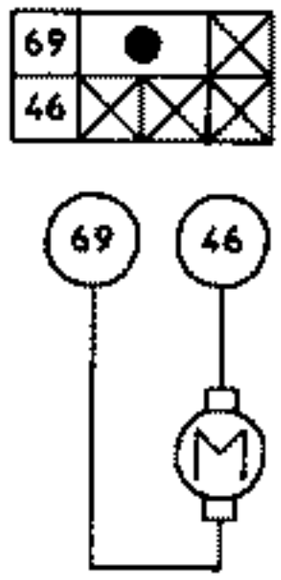

㊻	㊾	Intake door operation	Direction of lever rotation
⊖	⊕	REC → FRE	Counterclockwise
⊖	⊖	STOP	STOP
⊕	⊖	FRE → REC	Clockwise

SHA278C

System operation

The intake door motor is attached to the air intake unit. Intake door position is controlled approximately once every minute, according to the difference between target and actual vent air temperatures. When the actual outlet air temperature is higher than the target vent air temperature, the intake door will gradually shift toward the recirculation-air side. When the outlet air temperature reaches the target outlet air temperature, the intake door will gradually shift toward the fresh air side. However, when the ambient temperature is lower than 20°C (68°F), 100% fresh air is taken is regardless of outlet air temperatures.

When the compressor is "OFF" the auto amplifier sets the intake door at the "FRESH" position except when the "RECIRC" switch is "ON".

Specifications (Cont'd)

TEMPERATURE SENSORS

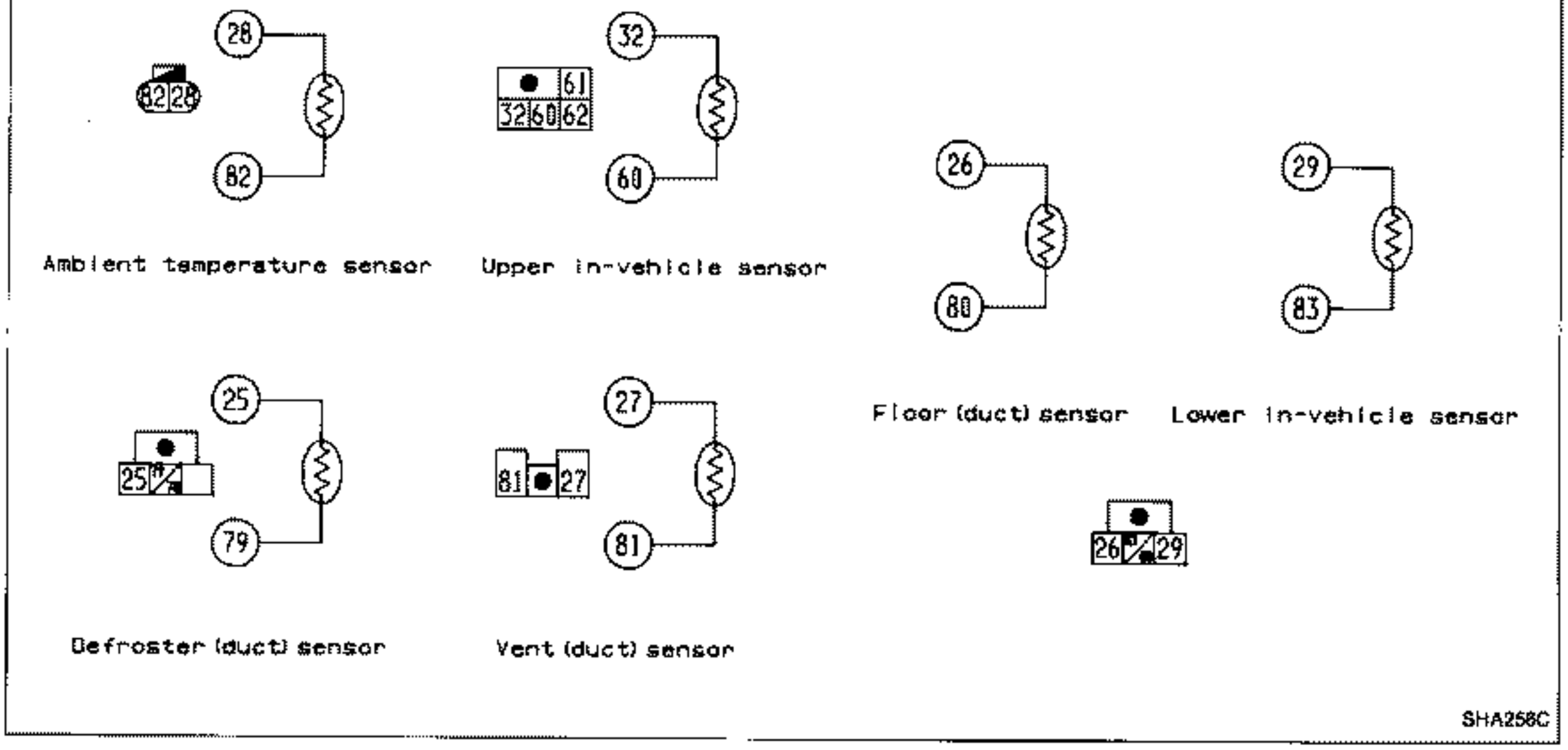

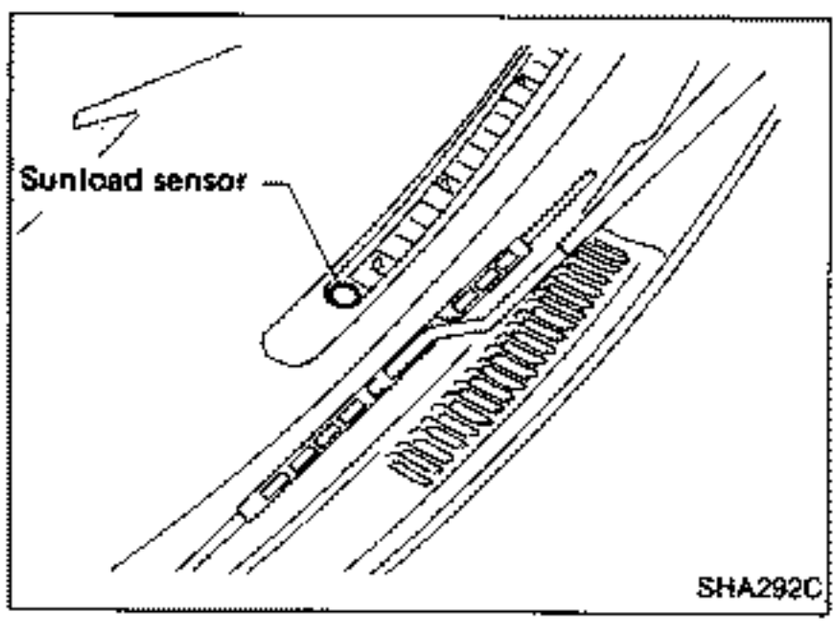

SUNLOAD SENSOR

The sunload sensor is located on the right defroster grille. It detects sunload entering through the windshield by means of a photo diode and converts it into a current value which is then input into the auto amplifier.

Specifications (Cont'd)

FAN CONTROL AMPLIFIER

The fan control amplifier is located on the cooling unit. It amplifies the base current flowing from the auto amplifier to change the blower speed.

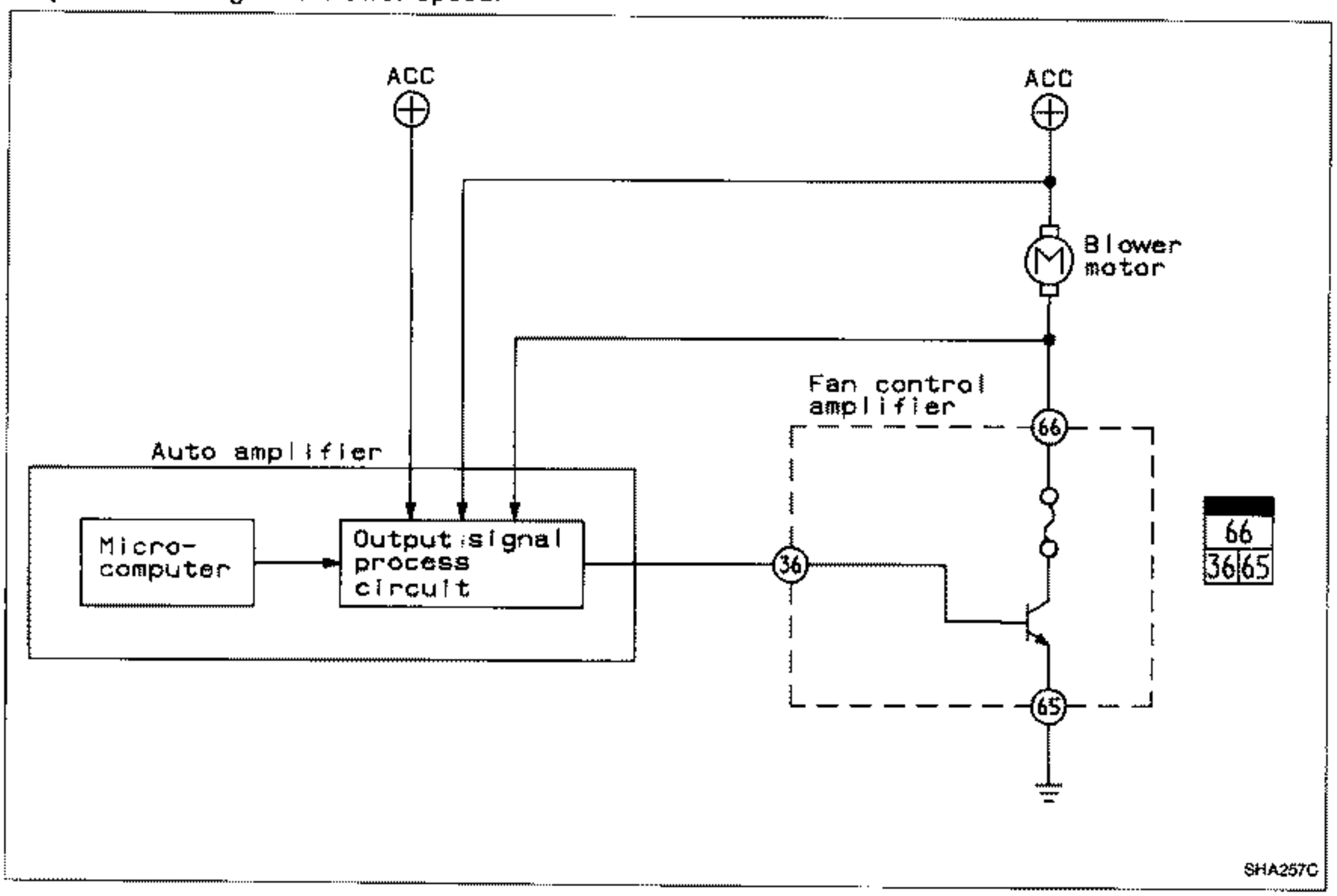

System Operation

SWITCH PANEL

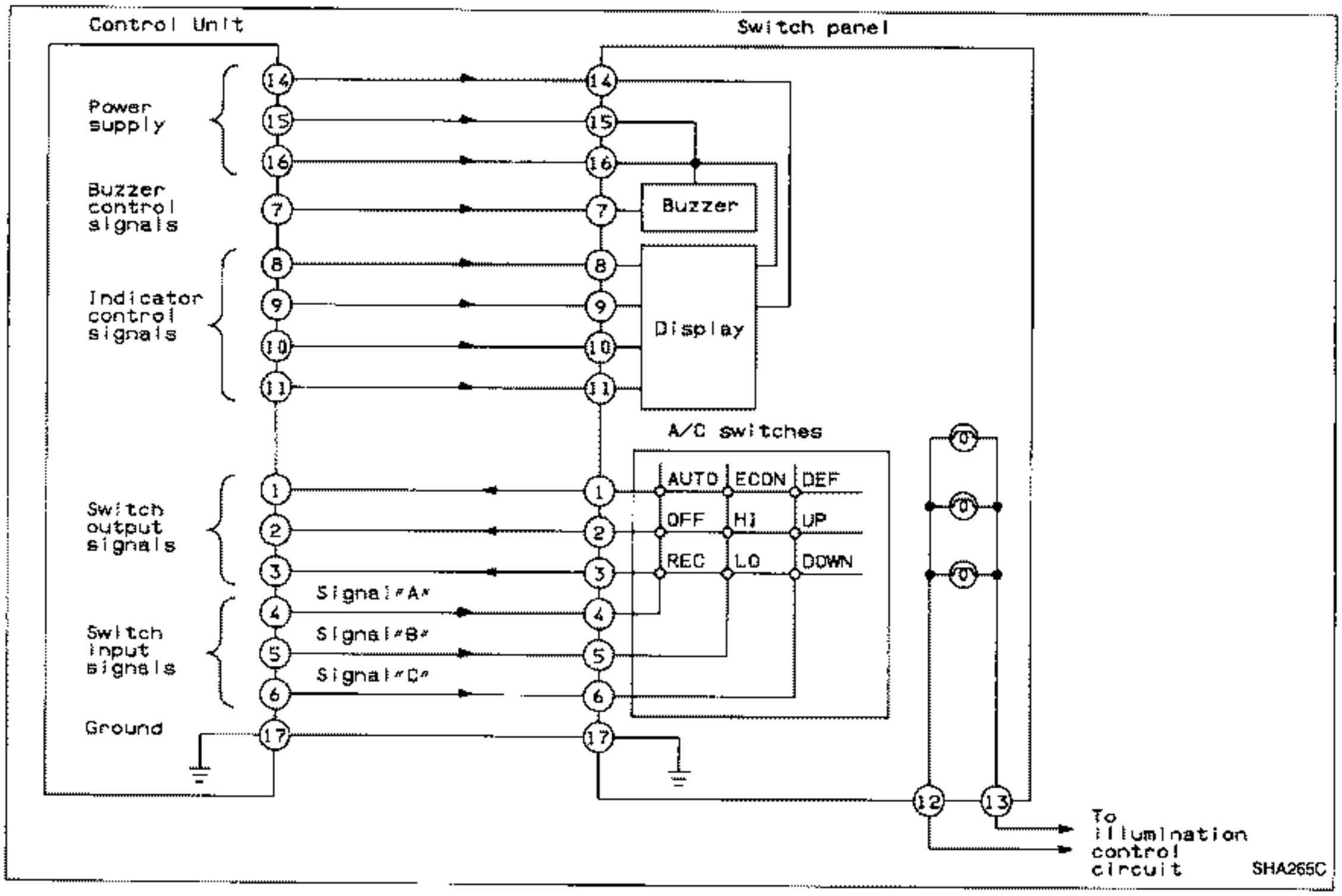

System operation

Except for illumination lamp terminals ⑫ and ⑬, the switch panel is operated by signals emitted from the control unit. There are three categories of signals.

1) Power and ground signals
2) Indicators (VFD and LED) and buzzer control signals
3) Switch input and output signals

The control unit always sends three different signals to the switch panel on three lines ④, ⑤, and ⑥. For example, when the "Auto" switch is pushed, signal "A" returns to the control unit on line No. ①. And when the "Econ" switch is pushed, signal "B" returns to the control unit on line No. ①.

Similarly for the other switches; the control unit recognizes which signal returns on which line, and then identifies which switch is pushed.

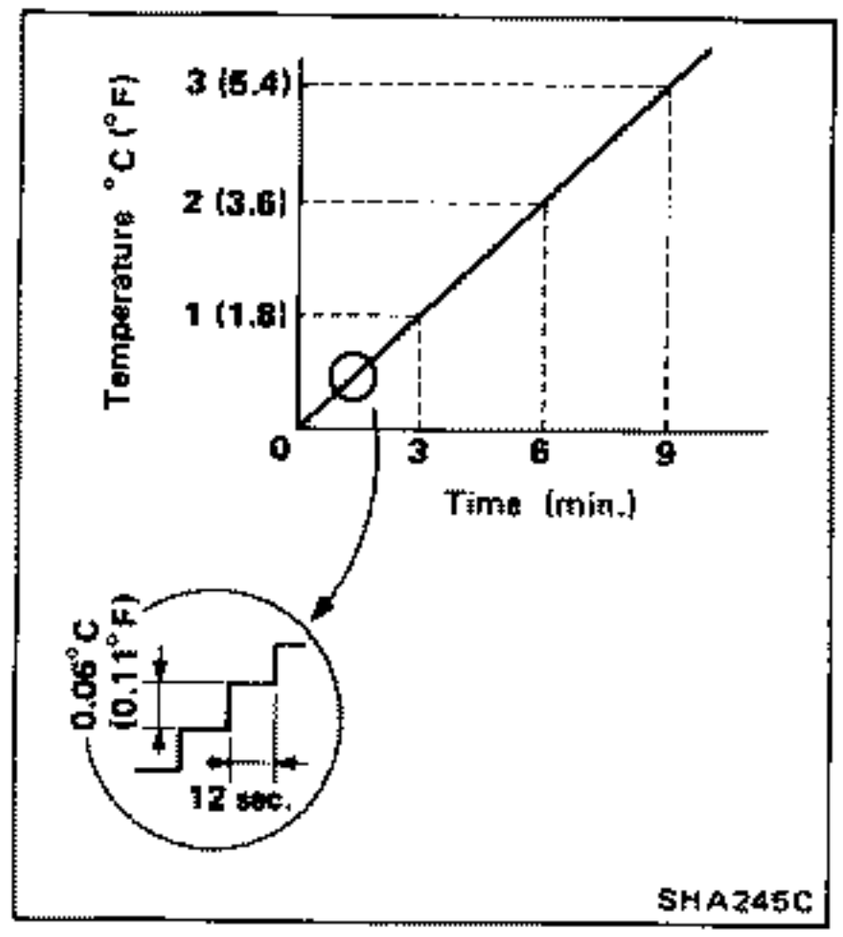

System Operation (Cont'd)

AMBIENT TEMPERATURE INPUT PROCESS

For A.T.C. system operation an accurate ambient sensor signal is necessary. The auto amplifier contains a circuit to ensure accurate measurement of increases in ambient temperature. Sudden increase in temperature of 16°C (61°F) or more, which may be detected after encountering heavy traffic after a period of high speed cruising, are processed through a delay circuit. The delay circuit processes any temperature increase in increments of 0.06°C (0.11°F) every 12 seconds and, in this way, the A.T.C. system is protected from any sudden changes in ambient sensor signal due to low air flow around the sensor.

Temperature decreases are not processed through the time delay circuit.

Example:

In the case of a signal stop after high-speed cruising, the ambient temperature will rises suddenly.
The ambient temperature input process functions at this time to prevent unpleasant air conditioning system changes.

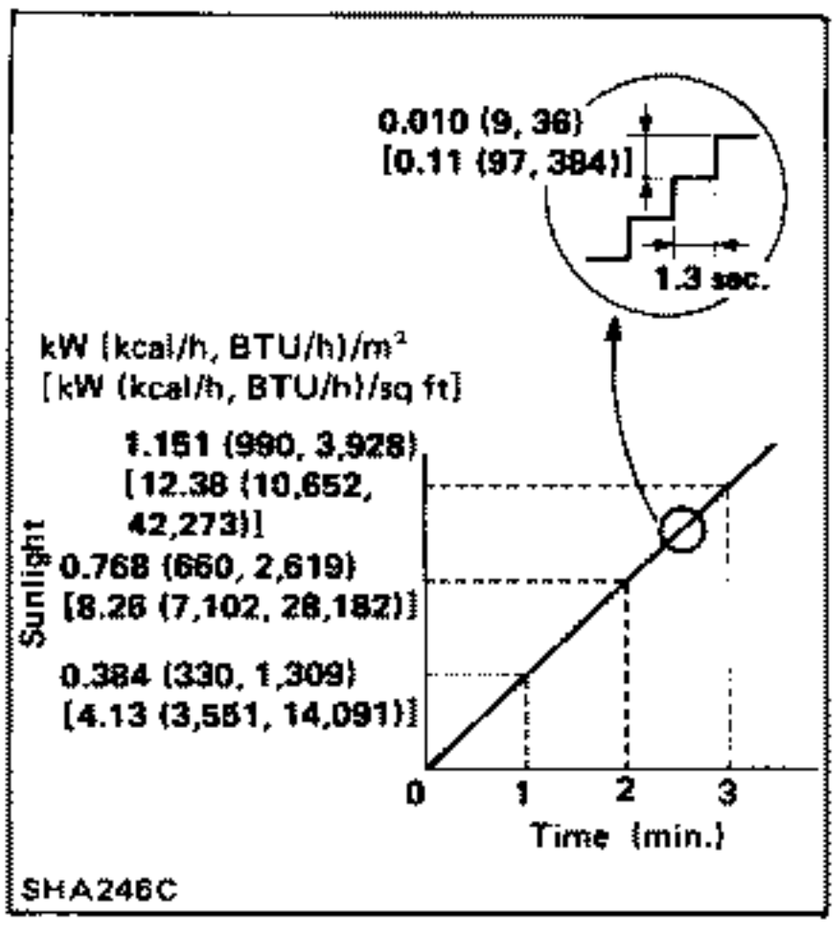

SUNLOAD INPUT PROCESS

The sunload input circuit in the auto amplifier also features a time delay to prevent abrupt A.T.C. system changes. This feature operates under rapid increases and decreases in sunload.

Example:

When entering a tunnel the sunload will change suddenly. The sunload input process system functions at this time to prevent unpleasant air conditioning system changes.

System Operation (Cont'd)

SENSOR INPUT PROCESS

A fixed resistor is built into the auto amplifier. 12V DC is converted to 5V DC by the constant voltage circuit where it is then applied to the ground line of the auto amplifier by the fixed resistor and sensors. The auto amplifier monitors the voltage between each sensor and the fixed resistor. The resistance of each sensor varies according to temperature.
Accordingly, the voltage at each sensor varies according to the temperature. The voltage signal is processed by the auto amplifier for A.T.C. system operation.

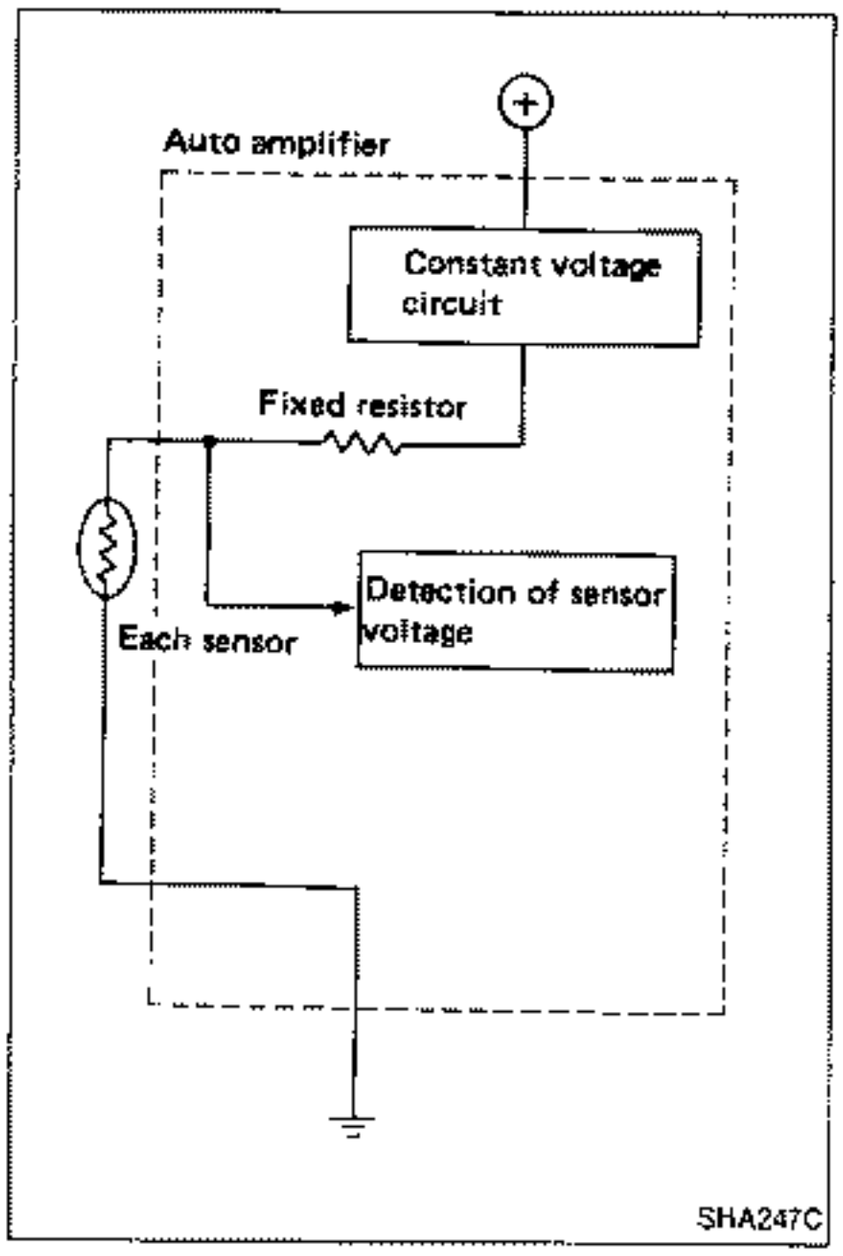

STARTING FAN SPEED AND OUTLET DOOR CONTROL

Component parts

Starting fan speed and outlet door control components are:

- Auto amplifier
- Fan control amplifier
- In-vehicle sensors (Upper and Lower)
- Duct sensor (Defroster, Ventilator and Floor)
- Ambient sensor
- sunload sensor
- Thermal transmitter (Engine coolant temperature sensor)

System operation

- Fan speed control
  At a set temperature of 25°C (77°F), when the upper compartment temperature is below 21°C (70°F) and the outlet duct temperature is lower than 35°C (95°F), the fan starts at minimum flow rate. As the discharge air temperature increases, the air flow rate increases to bring the compartment temperature to the target level as quickly as possible.
  When the ambient temperature is above 40°C (104°F), fan air flow rate is at full volume.
  As interior temperature begins to reach the target temperature, fan speed decreases.
  Under heavy sunload conditions, fan speed is increased to maintain uniform interior temperature. Fan speed also increases if the set temperature is decreased.
- Outlet door control
  At a set temperature of 25°C (77°F), when the upper in-vehicle temperature is lower than 21°C (70°F) and all of the outlet air temperatures are lower than 35°C (95°F), the system starts with the minimum airflow rate in the defroster mode. When defroster duct temperature rises above 35°C (95°F), the air outlet mode changes from the defroster mode to the DEF/FOOT mode. When floor duct temperature exceeds 40°C (104°F), the starting fan speed control and outlet door control mode is replaced by the normal automatic control mode. When the upper in-vehicle temperature is far greater than the lower in-vehicle temperature because of a large sunload, the system starts with the ventilator mode, which is replaced by the automatic control mode as the coolant temperature and outlet air temperature increases.

System Operation (Cont'd)

Starting fan speed and outlet door control specifications

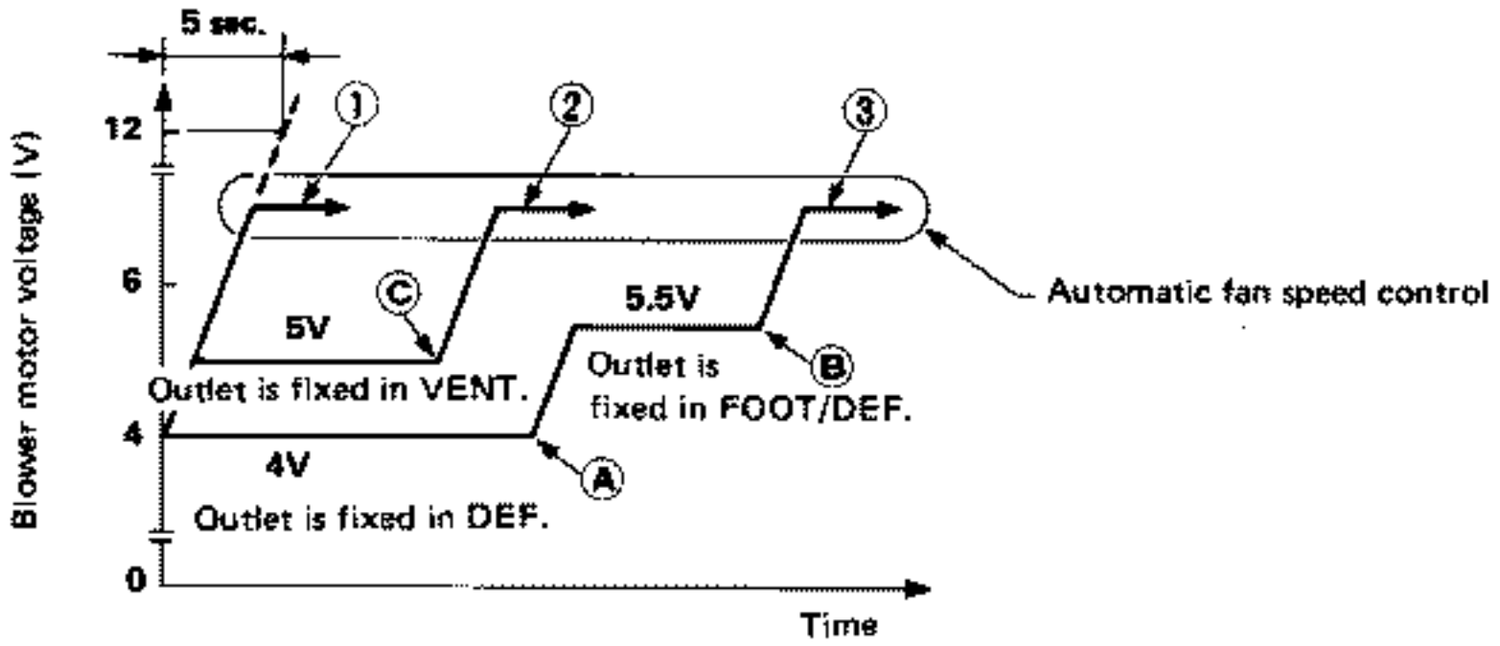

Time

① : When both upper and lower in-vehicle temperatures are much higher than set temperature.
② : When upper in-vehicle temperature is higher than set temperature.
③ : When upper in-vehicle temperature is lower than set temperature.
Ⓐ : VG30DE engine model
When DEF duct temperature rises above 35°C (95°F)
VG30DE engine model
When DEF duct temperature rises above approximately 20°C (68°F)
(Exact temperature depends on ambient temperature.)
Ⓑ : VG30DE engine model
When FLOOR duct temperature rises above 40°C (104°F)
VG30DETT engine model
When FLOOR duct temperature rises above approximately 36°C (97°F)
(Exact temperature depends on ambient temperature.)
Ⓒ : When water temperature rises above 40°C (104°F) and difference between outlet air temperature and target temperature is lower than 5°C (9°F).

SHA290C

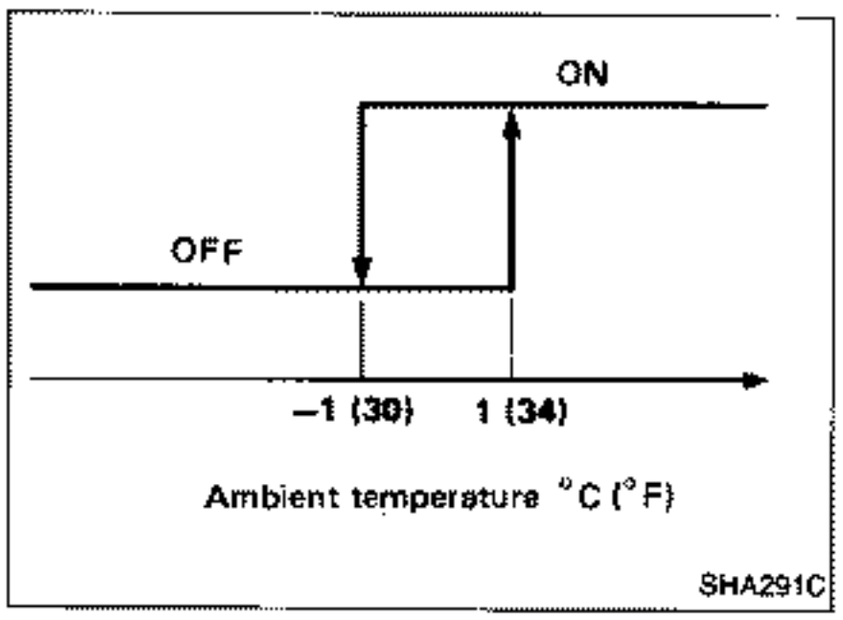

SHA291C

MAGNET CLUTCH CONTROL

The auto amplifier controls compressor operation by the ambient temperature and signals from the E.C.C.S. unit.
The auto amplifier will turn the compressor "ON" or "OFF" as determined by a signal detected by the ambient temperature sensor.

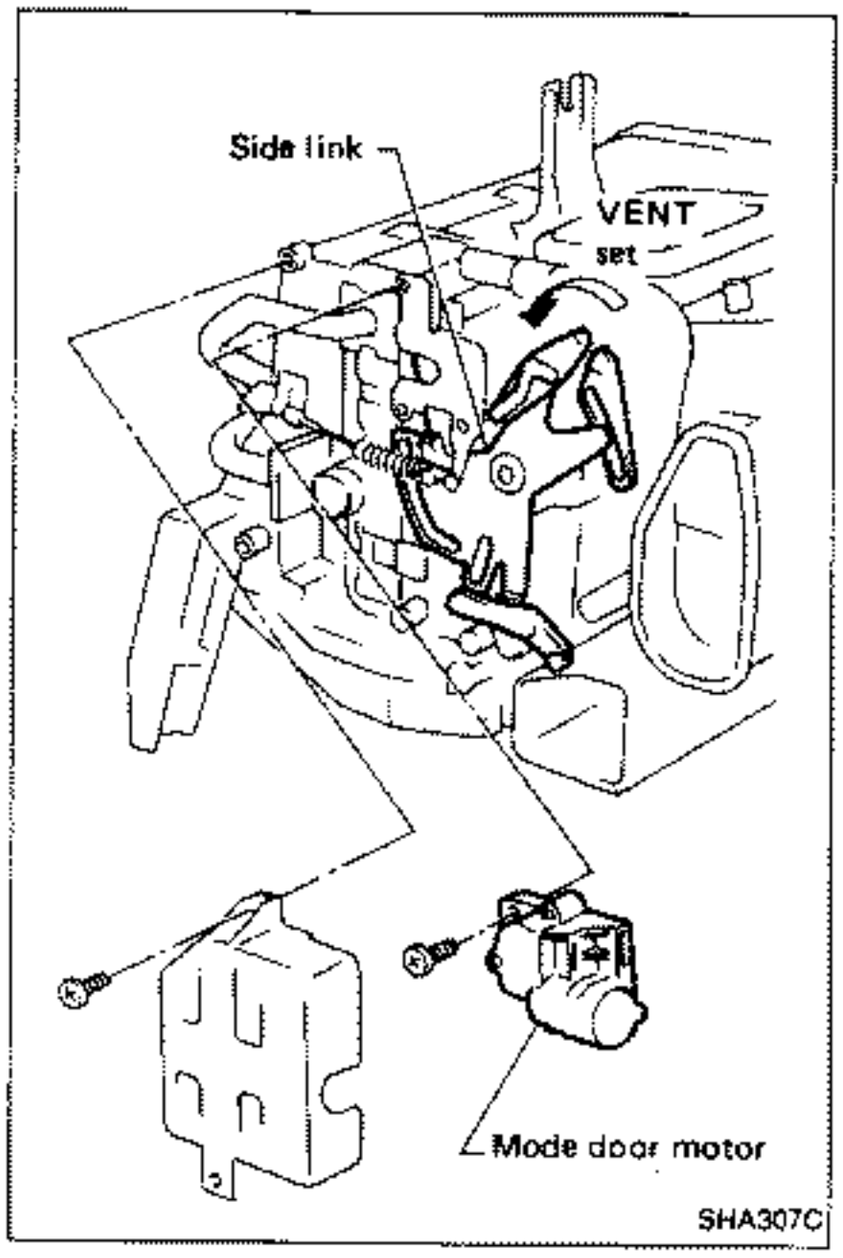

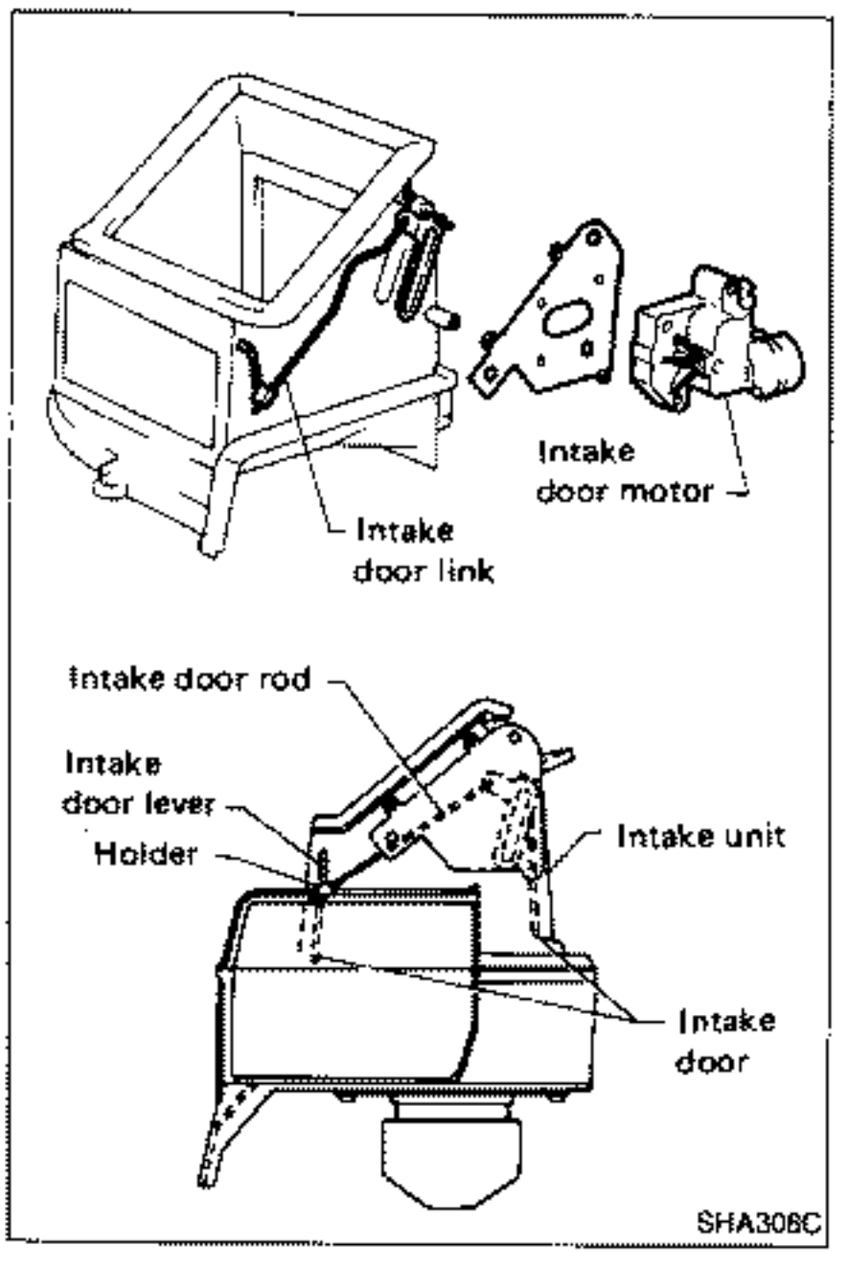

Control Rod Adjustment

MODE DOOR

1. Move side link by hand and hold mode door in VENT mode.
2. Install mode door motor on heater unit and connect it to harness.
3. Turn ignition switch to ACC.
4. Set up "ACTIVE TEST" mode with CONSULT or set up self-diagnosis STEP 2.
5. Set MODE DOOR position as in the following table.

MODE DOOR POSITION	Code No.
VENT	6X

6. Attach mode door rod to side link rod holder.
7. Check mode door operates when position is changed with CONSULT or when code No. 6X is changed to others.

Code No.	3X	4X	5X	6X
Mode door position	DEF	HEAT	B/L	VENT

INTAKE DOOR

1. Install intake door motor on intake unit.
2. Connect intake door motor to harness.
3. Turn ignition switch to ACC.
4. Set up "ACTIVE TEST" mode with CONSULT or set up self-diagnosis STEP 2.
5. Set INTAKE DOOR position as in the following table.

INTAKE DOOR POSITION	Code No.
REC	6X

6. Install intake door lever.
7. Set intake door rod in REC position and fasten intake door rod to holder intake door lever.
8. Check intake door operates properly when position is changed with CONSULT or when code No. 6X is changed to others.

Code No.	3X	4X	5X	6X
Intake door position	Outside air		Partial outside air	Recirculation

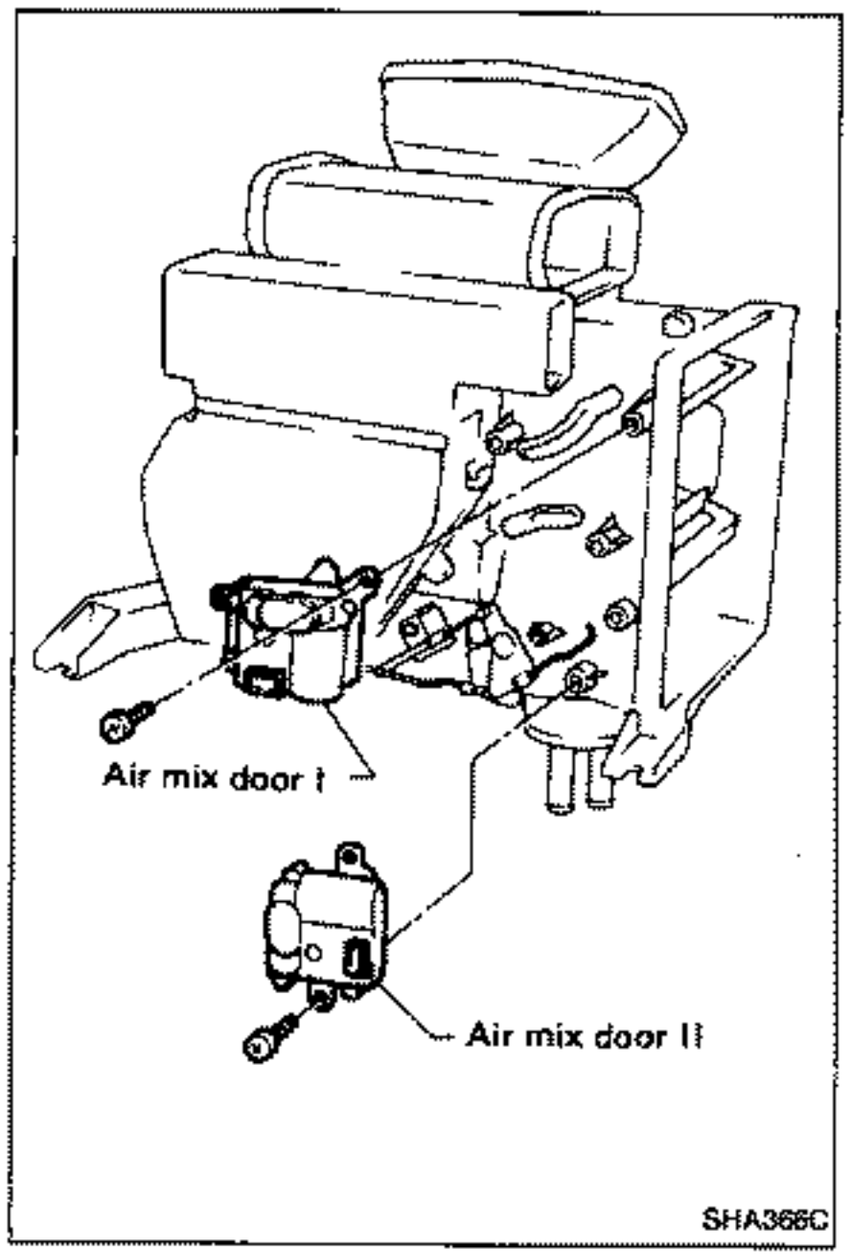

Control Rod Adjustment (Cont'd)

AIR MIX DOOR

1. Connect harness to air mix door motors I and II and set temperature control lever at full-cold position.
2. Set air mix doors I and II at full-cold position and fasten door rod.
3. Check that when temperature control lever is at full-cold, both doors are at full-cold position, and when temperature control lever is at full-hot, both doors are at full-hot position.

WATER COCK CONTROL CABLE

Clamp cable at full-close position when air mix door II is at full-cold position, and full-open position when air mix door II is at full-hot position.

NOTE

Wiring Diagram

L.H. DRIVE MODEL

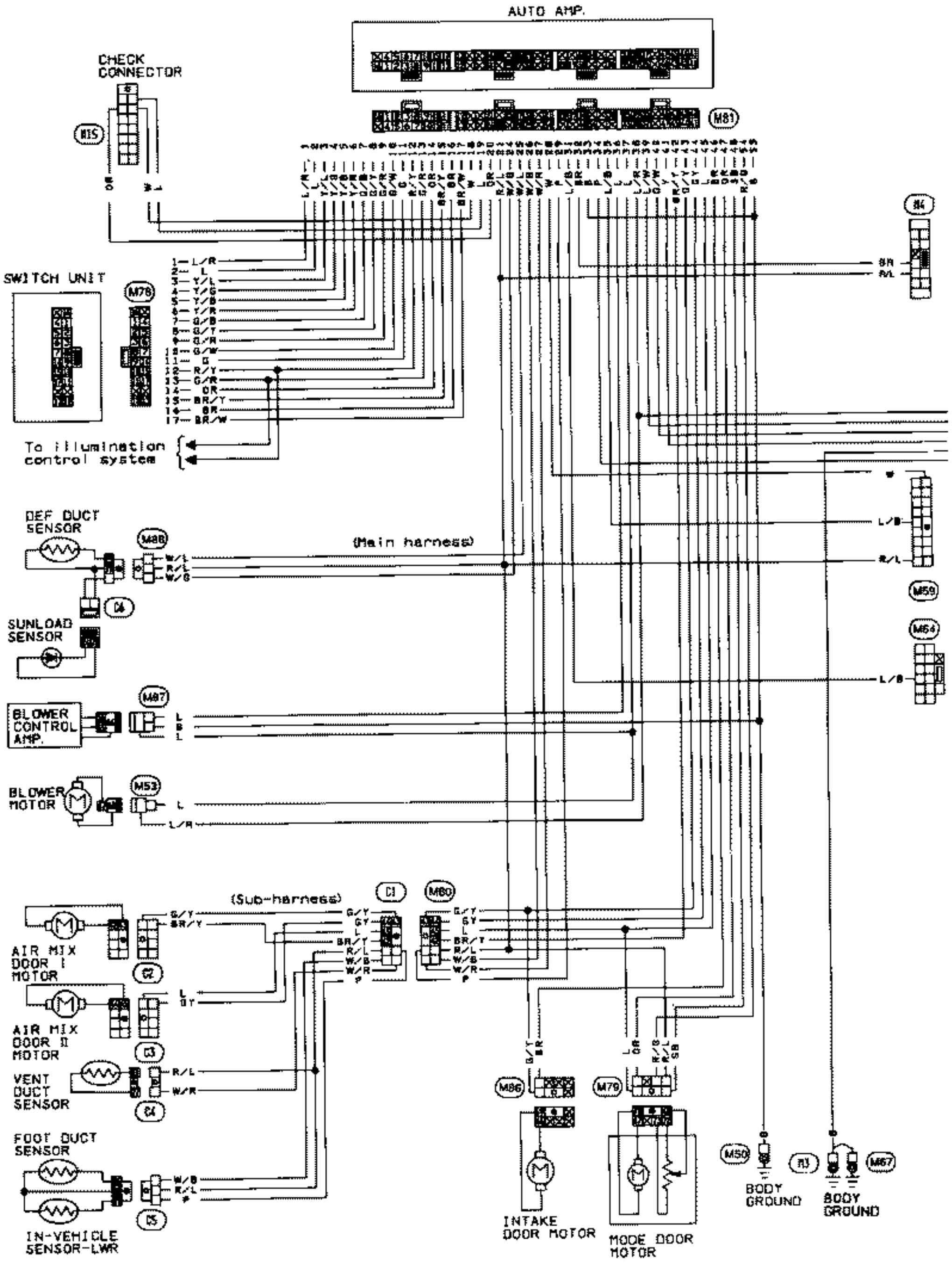

Wiring Diagram (Cont'd)

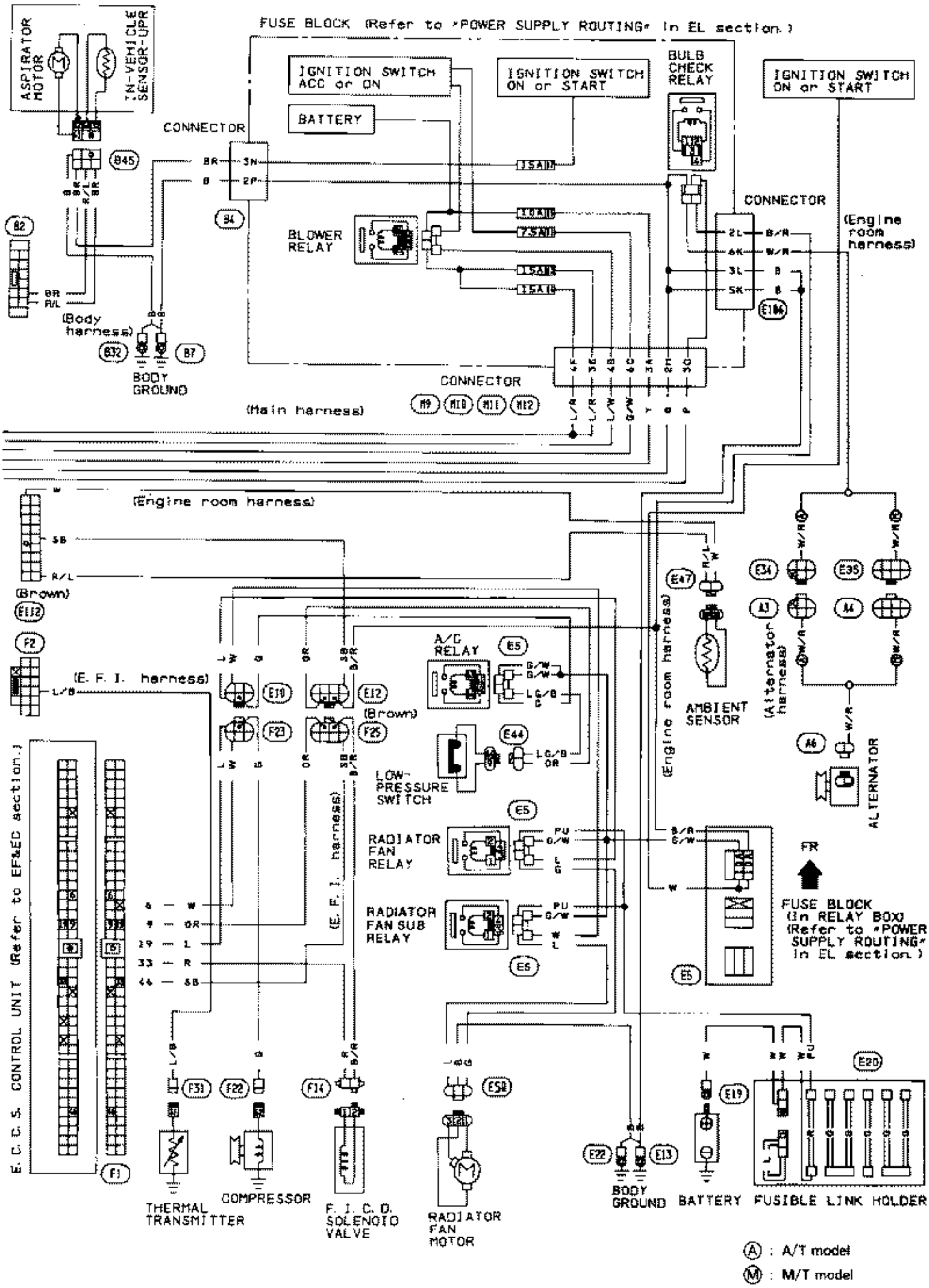

SHA694C

Contents

How to Perform Trouble Diagnoses for Quick and Accurate Repair HA-114
Symptom Chart HA-115
Self-diagnosis HA-117
CHECKING PROCEDURE HA-119
STEP 1: MONITOR DIAGNOSIS HA-121
STEP 2: ACTUATOR TEST HA-121
STEP 3: AUXILIARY MECHANISM HA-122
STEP 4: READOUT OF TROUBLE DATA STORED IN MEMORY HA-123
Consult HA-124
Preliminary Check HA-125
PRELIMINARY CHECK 1
(Air outlet does not change) HA-125
PRELIMINARY CHECK 2
(Intake door does not change) HA-126
PRELIMINARY CHECK 3
(Insufficient cooling) HA-127
PRELIMINARY CHECK 4
(Insufficient heating) HA-129
PRELIMINARY CHECK 5
(Blower motor operation is malfunctioning) HA-130
PRELIMINARY CHECK 6
(Magnet clutch does not engage) HA-131
PRELIMINARY CHECK 7
(Discharged air temperature does not change) HA-132
PRELIMINARY CHECK 8
(Noise) HA-132
Main Power Supply and Ground Circuit Check HA-133
Harness Layout for A/C System HA-134
Circuit Diagram for Quick Pinpoint Check HA-136
Diagnostic Procedure 1
(SYMPTOM: Self-diagnosis detects intermittent short or open circuit in each sensor circuit) HA-137
Diagnostic Procedure 2
(SYMPTOM: Ambient sensor circuit is open) HA-138
Diagnostic Procedure 3
(SYMPTOM: Ambient sensor circuit is shorted) HA-139
Diagnostic Procedure 4
(SYMPTOM: Upper in-vehicle sensor circuit is open) HA-140
Diagnostic Procedure 5
(SYMPTOM: Upper in-vehicle sensor circuit is shorted) HA-141
Diagnostic Procedure 6
(SYMPTOM: Lower in-vehicle sensor circuit is open) HA-142
Diagnostic Procedure 7
(SYMPTOM: Lower in-vehicle sensor circuit is shorted) HA-143
Diagnostic Procedure 8
(SYMPTOM: Def. duct sensor circuit is open) HA-144
Diagnostic Procedure 9
(SYMPTOM: Def. duct sensor circuit is shorted) HA-145
Diagnostic Procedure 10
(SYMPTOM: Vent duct sensor circuit is open) HA-146
Diagnostic Procedure 11
(SYMPTOM: Vent duct sensor circuit is shorted) HA-147

Z.ONE.DATSUN

Contents (Cont'd)

Diagnostic Procedure 12
(SYMPTOM: Floor duct sensor circuit is open) HA-148
Diagnostic Procedure 13
(SYMPTOM: Floor duct sensor circuit is shorted) HA-149
Diagnostic Procedure 14
(SYMPTOM: Sunload sensor circuit is shorted) HA-150
Diagnostic Procedure 15
(SYMPTOM: Air mix door does not operate normally) HA-151
Diagnostic Procedure 16
(SYMPTOM: Intake door does not operate normally) HA-152
Diagnostic Procedure 17
(SYMPTOM: Mode door does not operate normally) HA-153
Diagnostic Procedure 18
(SYMPTOM: Mode door does not move at all) HA-154
Diagnostic Procedure 19
(SYMPTOM: Magnet clutch does not engage) HA-155
Diagnostic Procedure 20
(SYMPTOM: Air conditioner control switch panel illumination does not come on) HA-157
Diagnostic Procedure 21
(SYMPTOM: Set temperature and ambient temperature do not appear on display window) HA-158
Diagnostic Procedure 22
(SYMPTOM: When air conditioner switch is operated it does not beep) HA-159
Diagnostic Procedure 23
(SYMPTOM: Figures of set temperature and ambient temperature do not appear on the display window and indicator lamp (L.E.D.) does not come on) HA-160
Diagnostic Procedure 24
(SYMPTOM: Switches do not work) HA-161
Diagnostic Procedure 25
(SYMPTOM: Blower motor operation is malfunctioning) HA-162
Electrical Components Inspection HA-165

How to Perform Trouble Diagnoses for Quick and Accurate Repair

WORK FLOW

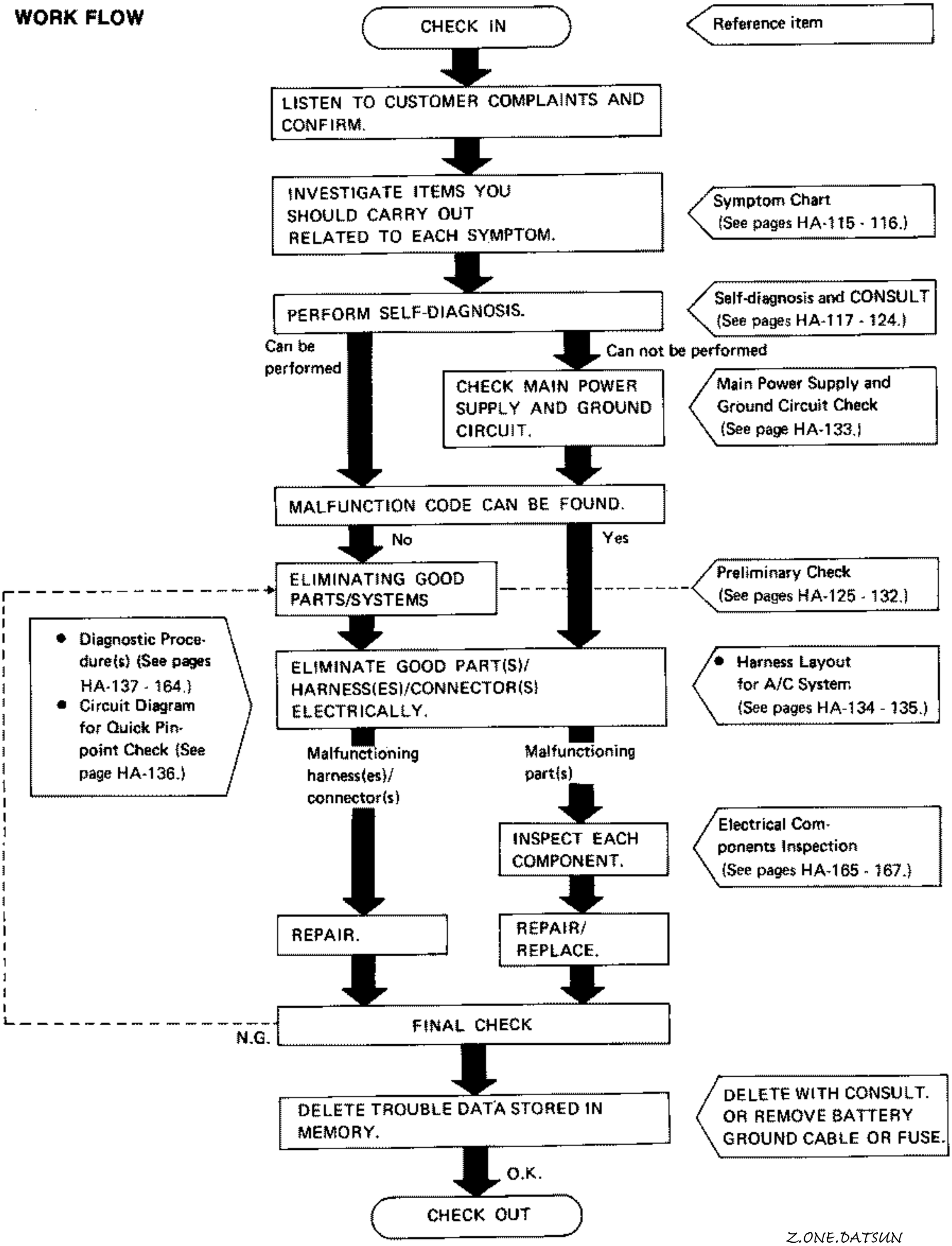

Z.ONE.DATSUN

Symptom Chart

DIAGNOSTIC TABLE

Symptom	Possible cause	Diagnostic procedure
Air outlet does not change	• Mode door motor not operating correctly • Inaccurate sensor input • No output to mode door motor from auto amplifier	Proceed to Preliminary check 1, then to Diagnostic procedures 17 and 18 if air mix door is malfunctioning.
Intake door does not change	• Intake door motor or mechanism malfunctioning • Inaccurate sensor input • No output to intake door motor from auto amplifier	Proceed to Preliminary check 2, if intake door is malfunctioning, go to Diagnostic Procedure 16.
Insufficient cooling	• Compressor clutch not engaged • Air mix door motors not working properly • Condenser fan inoperative • Low freon level	Proceed to Preliminary check 3. If air mix doors do not operate properly, go to Diagnostic procedure 15. Check compressor clutch operation and freon level of system.
Discharged air temperature does not change	• Air mix doors do not operate correctly • Incorrect sensor input	Proceed to Preliminary check 7.
Noise	• Compressor belt tension • Compressor component malfunction • Blower motor interference • Radiator cooling fan interference	Proceed to Preliminary check 8.
Air conditioner control switch panel illumination does not come on	• Blown fuse • Loose or open in harness • Blown bulb	Proceed to Diagnostic procedure 20.
Insufficient heating	• Coolant temperature is low • Air mix doors not in correct position • Incorrect sensor input	Proceed to Preliminary check 4. If air mix doors do not operate correctly, go to Diagnostic procedure 15.
Blower motor operation is malfunctioning	• Blower motor is not receiving power • Vents may be obstructed • Motor does not spin freely • Air intake obstructed • Blown fuse • Malfunctioning blower relay	Proceed to Preliminary check 5. If blower motor is malfunctioning, go to Diagnostic procedure 25.
Magnet clutch does not engage	• Blown fuse • A/C relay inoperative • Open in wiring • Open ambient sensor circuit • Low freon level • Malfunctioning clutch assembly	Proceed to Preliminary check 6, then Diagnostic procedure 19 if clutch is malfunctioning.

Symptom Chart (Cont'd)

Symptom	Possible cause	Diagnostic procedure
No display on A/C switch panel	• Blown fuse • Malfunctioning bulb	Proceed to Diagnostic procedure 20.
Set temperature and ambient temperature do not appear on display window	• Malfunctioning switch unit • Open in circuit • Malfunctioning auto amplifier	Proceed to Diagnostic procedure 21.
When air conditioner switch is operated, if does not beep	• Malfunctioning A/C switch • Open in harness or connector • Malfunctioning auto amplifier	Proceed to Diagnostic procedure 22.
Set and ambient temperature do not appear in display and indicator lamp (L.E.D.) does not come on	• Open in harness • Malfunctioning switch panel • Malfunctioning auto amplifier	Proceed to Diagnostic procedure 23.
Switches do not work	• Malfunctioning switch panel • Open in harness • Malfunctioning auto amplifier	Proceed to Diagnostic procedure 24.

Self-diagnosis

CONSULT AND ONBOARD SELF-DIAGNOSTIC SYSTEM

Function of CONSULT and ONBOARD SELF-DIAGNOSTIC SYSTEM are as follows:

ITEM	MONITOR		CHANGE PARAMETER		READOUT OF TROUBLE DATA STORED IN MEMORY	
	CONSULT	ONBOARD	CONSULT	ONBOARD	CONSULT	ONBOARD
Ambient temp.	○	○			○	○
In-vehicle temp. (Upper)	○	○			○	○
In-vehicle temp. (Lower)	○	○			○	○
Duct temp. (Defroster)	○	○			○	○
Duct temp. (Ventilator)	○	○			○	○
Duct temp. (Floor)	○	○			○	○
Sunload	○	○			○	○
Water temp.	○	○				
Mode door P.B.R.	○	○				
In-vehicle target temp. (Upper)	○					
In-vehicle target temp. (Lower)	○					
Outlet air target temp. (Upper)	○		○	*○		
Outlet air target temp. (Lower)	○		○	*○		
Mode door target position	○		○	*○		
Intake door target position	○		○	*○		
Blower motor target voltage	○		○	*○		
Difference between upper and lower target temp.	○		○	*○		
Output signal to compressor	○		○	*○		
Set temp.	○					
Selected mode	○					
Operated switches status	○					

*: These can be set by self-diagnosis step II; their combinations are as follows:

SET	30
AMB	code

Press Hi SW.

Actuator test

Code	Intake	Outlet	A/M door	Comp
3x	Outside air	Def	F/H	ON
4x	Outside air	Heat	F/H	Off
5x	Partial outside air	B/L	30°C (86°F)	On
6x	Recirculation air	Vent	F/C	On

[Blower voltage (fixed)]

Press LO SW.

Code	Voltage
x3	4V
x4	6V
x5	9V
x6	12V

*: "x" refers to any value of 3, 4, 5 and 6.

Z.ONE.DATSUN

Self-diagnosis (Cont'd)

The self-diagnostic system diagnoses the sensors, door motors, blower motor, etc. by system line. Refer to applicable sections (items) for details. Shifting from normal control to the self-diagnostic system is accomplished by starting the engine (turning ignition switch from "OFF" to "ON"), and pressing both the (AUTO) and (OFF) switch for at least 5 seconds.

This system will be cancelled by either pressing the (OFF) switch or turning the ignition switch "OFF". Shifting from one step to another is accomplished by means of pushing the (AUTO) switch, as required.

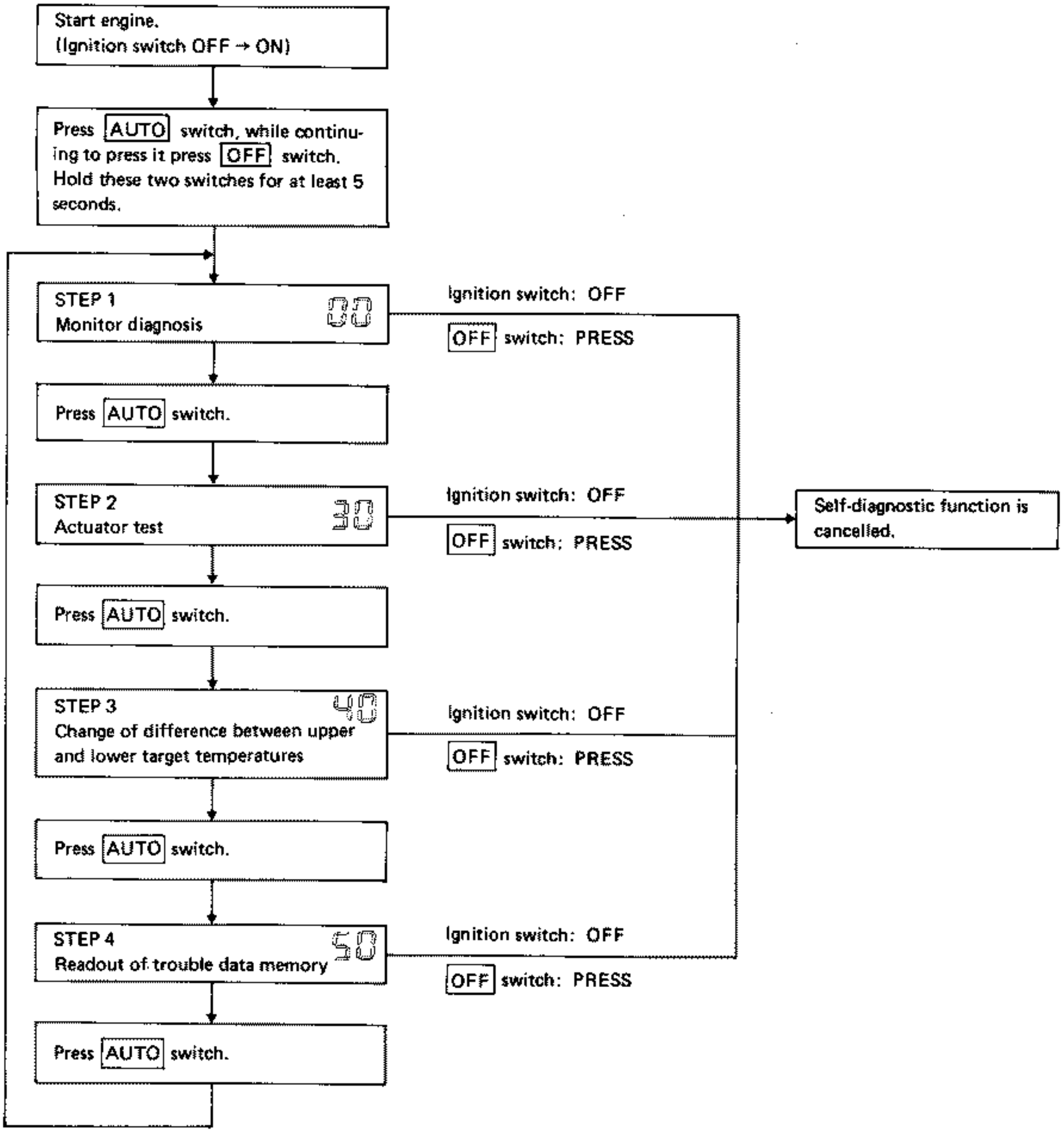

Self-diagnosis (Cont'd)

CHECKING PROCEDURE

Note

Start engine.

Check if SET and AMB data (VFD display) illuminate.

No → Faulty wiring or VFD

Yes

Set in self-diagnostic mode.
(Press AUTO switch, while continuing to press it press OFF switch. Hold these two switches for at least 5 seconds.)

Check if air conditioner operates and SET "00" appears.

No → Faulty "AUTO" or "OFF" switch

Yes

STEP 1 — SET 0 0 SENSOR MONITOR

Identification data of each sensor is shown.

Press HI switch or LO switch.

Press AUTO switch.

STEP 2 — SET 3 0 ACTUATOR TEST

Code No. of actuators test pattern is indicated on display.

Press HI switch or LO switch.

Ⓐ

Sensor monitor

SET	Code
AMB	data

Press HI SW.

Press LOW SW.

Code	Item	Temperature variation range (When compartment temperature is stabilized)
00	Ambient temperature	−30 to 45°C (−22 to 113°F)
01	Upper compartment temperature	18 - 30°C (64 - 86°F)
02	Lower compartment temperature	20 - 35°C (68 - 95°F)
03	DEF outlet air temperature	5 - 70°C (41 - 158°F)
04	VENT air temperature	5 - 40°C (41 - 104°F)
05	FLOOR outlet air temperature	20 - 70°C (68 - 158°F)
06	Sunload	*1 0 - 1,047 kW (0 - 900 kcal/h, 0 - 3,571 BTU/h)/m² (0 - 11.26 kW (0 - 9,684 kcal/h, 0 - 38,436 BTU/h)/sq ft)
07	Water temperature	*2 20°C (68°F) or 80°C (176°F)
08	MODE door voltage	0 - 5V
09 I 16	Internal data	...

*1: Indication figure is one tenth of the value in kcal/h unit.
*2: When coolant temperature is below 40°C (104°F) indicates 20°C (68°F).
When coolant temperature is above 40°C (104°F) indicates 80°C (176°F).

Actuator test

SET	30
AMB	code

Press HI SW.

Code	Intake	Outlet	A/M door	Comp
3x	Outside air	Def	F/H	Off
4x	Outside air	Heat	F/H	Off
5x	Partial outside air	B/L	30°C (86°F)	On
6x	Recirculation air	Vent	F/C	On

(Blower voltage (fixed))

Press LO SW.

Code	Voltage
x3	4V
x4	6V
x5	9V
x6	12V

*: "x" refers to any value of 3, 4, 5 and 6.

Note:
1. Without engine running, STEP 1 and 2 are not useful for some case because compressor not operate.
2. While in the self-diagnosis mode, set temperature switch functions remain as usual.

Self-diagnosis (Cont'd)

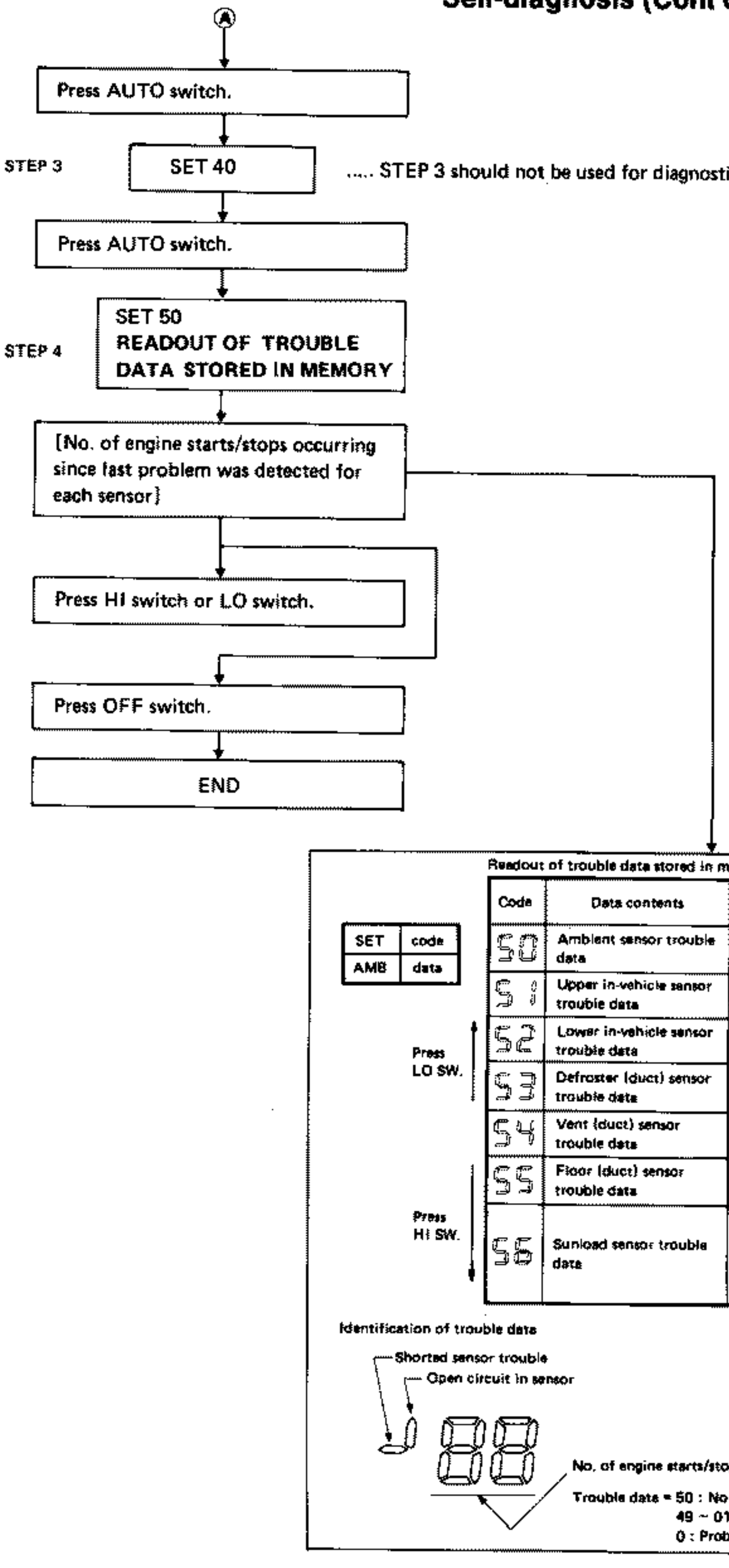

Self-diagnosis (Cont'd)

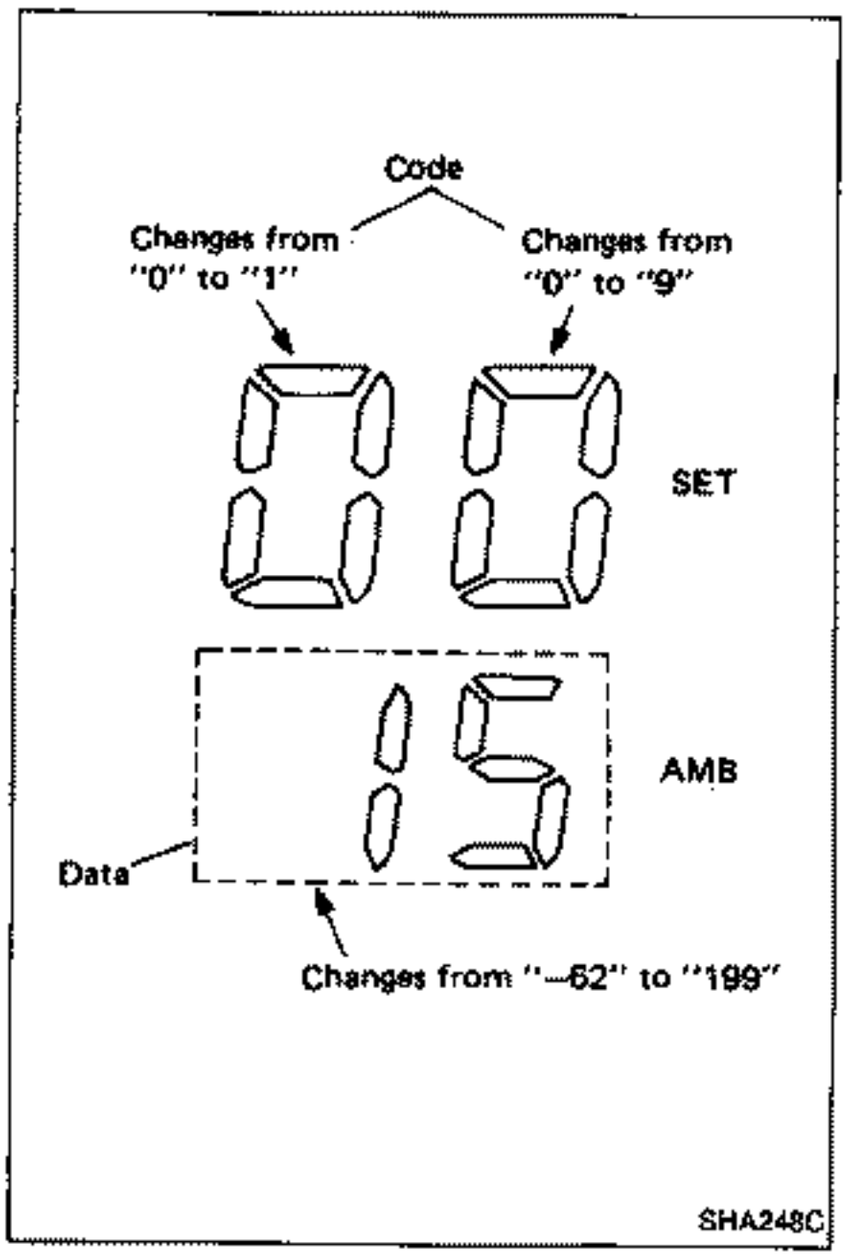

STEP 1: MONITOR DIAGNOSIS

In STEP 1 mode, "00" and "data", respectively appear in SET and AMB section of display.

Each time the "HI" switch is pressed, the code number in the SET section advances one number, and data corresponding with the code number appears in the AMB section. Each time the "LO" switch is pressed, the code number reduces by one number, and data corresponding with the code number appears in the AMB section.

If the temperature shown on the display greatly differs from the actual temperature, check the sensor circuit first, then inspect the sensor itself according to the procedures described in Electrical Components Inspection.

* For cross-reference of code number and corresponding data, refer to "Monitor Diagnosis" in STEP 1.

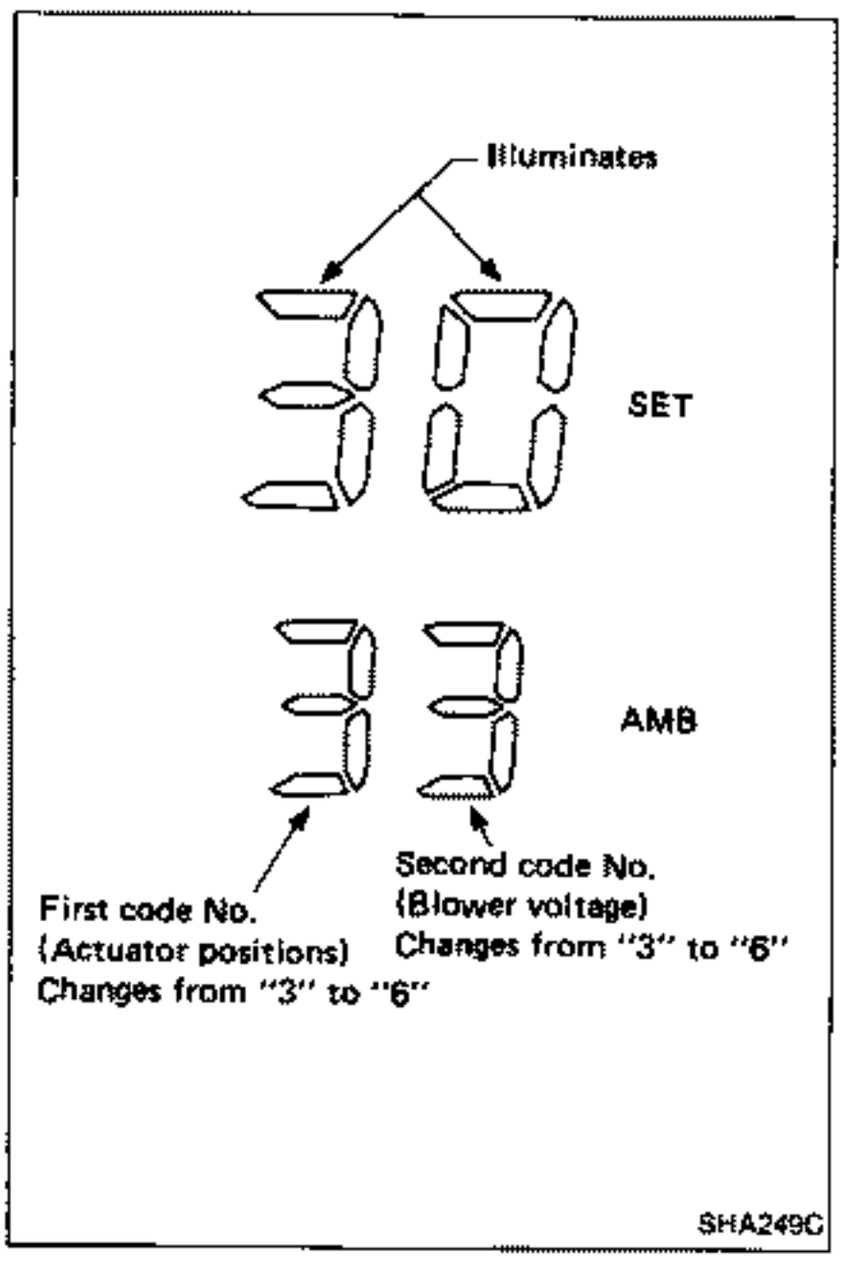

STEP 2: ACTUATOR TEST

In STEP 2 mode, "30" and "33" respectively appear in the SET and AMB sections of the display.

When the "HI" switch is pressed one time, the first code advances. This code returns to "3" after it reaches "6". Similarly, when the "LO" switch is pressed one time, the second code advances one number. After the code number "6" appears, it returns to "3".

Self-diagnosis (Cont'd)

During inspection in STEP 2 mode, the auto amplifier will forcefully transmit an output to the affected actuators in response to the code No. shown on the display, as indicated in the table below.
Checks must be made for improper operation visually, by listening to any noise, or by touching air outlets with your hand, etc.

First code No. / Actuator	3	4	5	6
Mode door	DEF	HEAT	B/L	VENT
Intake door	FRE	FRE	50% FRE	REC
Air mix door	Full Hot	Full Hot	30°C (86°F)	Full Cold
Compressor	OFF	OFF	ON	ON

Operating condition of each actuator cannot be checked by indicators.

Second code No. / Blower motor	3	4	5	6
Voltage	4V	6V	9V	12V

* 1) First and second codes can be set independently.
2) When first code "5" appears, air mix door activates.
A stabilized outlet temperature 30°C (86°F) is reached after air mix door has been operating for approximately one minute.

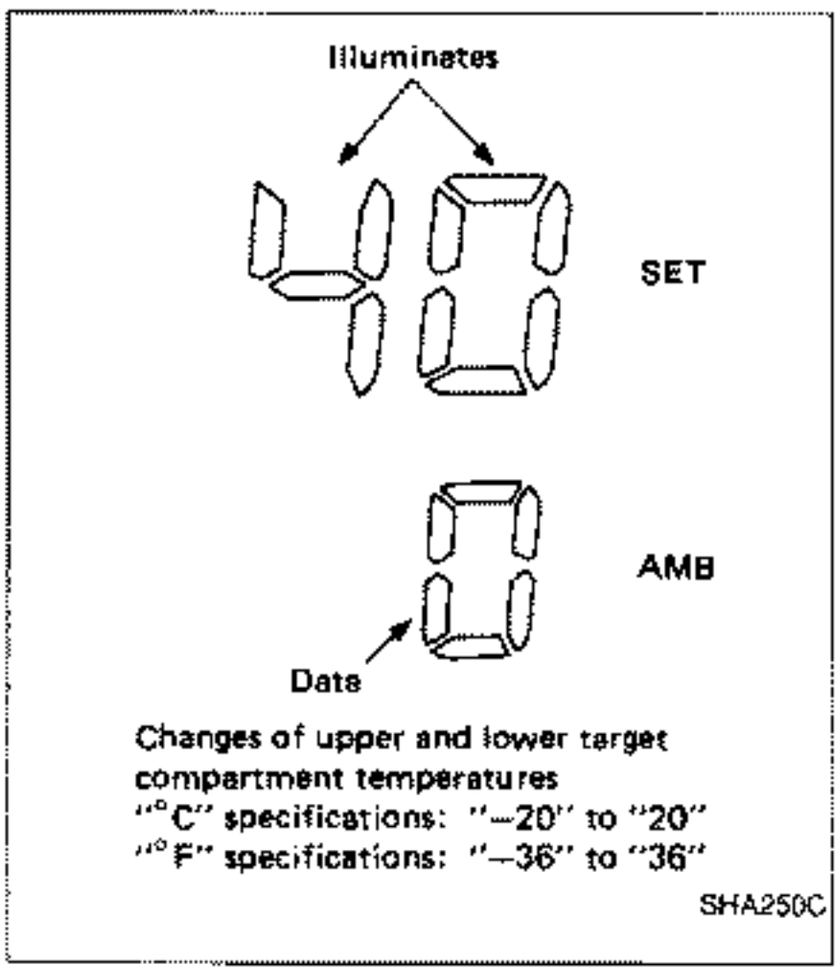

Changes of upper and lower target compartment temperatures
"°C" specifications: "–20" to "20"
"°F" specifications: "–36" to "36"

SHA250C

STEP 3:AUXILIARY MECHANISM

Changes of difference between upper and lower target temperatures.

* Figures in parentheses "( )" refer to values for "°F" specifications.

In STEP 3 mode, "40" and "0" (if this number is changed, the corresponding number appears) respectively appear in the SET and AMB sections of the display.
Each time the "HI" switch is pressed, the number in the AMB section advances. This number will increase up to 20 for °C specifications and 36 for °F specifications. Each time the "LO" switch is pressed, the number decreases. This number decreases to –20 for °C specifications and –36 for °F specifications. For °C specifications, pressing the "HI" or "LO" switch each time increases or decreases the data number by "1" degree (and by "1" through "3" degrees for °F specifications).

°C specifications	Data	–20	— — —	–1	0	1	— — —	20
	Difference between upper and lower target temperatures	–2.0°C	— — —	–1°C	0°C	0.1°C	— — —	2.0°C
°F specifications	Data	–36	— — —	–2	0	2°C	— — —	36
	Difference between upper and lower target temperatures	–3.6°F	— — —	–0.2°F	0°F	0.2°F	— — —	3.6°F

Difference between upper and lower target temperatures changed in the preceding procedure is kept until the next change is done or the battery cable is removed.

Self-diagnosis (Cont'd)

STEP 4: READOUT OF TROUBLE DATA STORED IN MEMORY

In STEP 4 mode, "50" and "trouble data" respectively appear in the SET and AMB sections.
Each time the "HI" switch is pressed, the code number advances by one number. After it reaches "6", it will return to "0".
Each time the "LO" switch is pressed, the code number reduces by one number. After it reaches "0", it will return to "6".

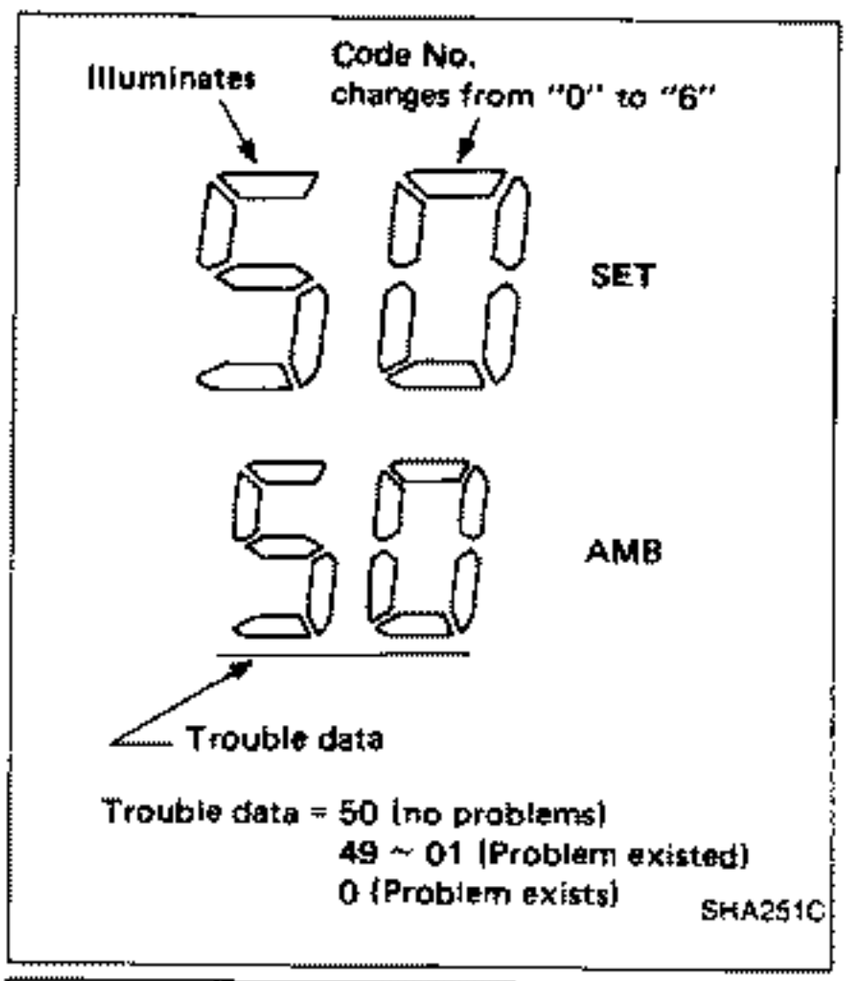

When the sensor becomes inoperative, number of engine starts/stops occurring since last problem was detected, appears in the AMB section of the display.
Open circuit or short circuit is indicated by " ⟨ " or "⟩".

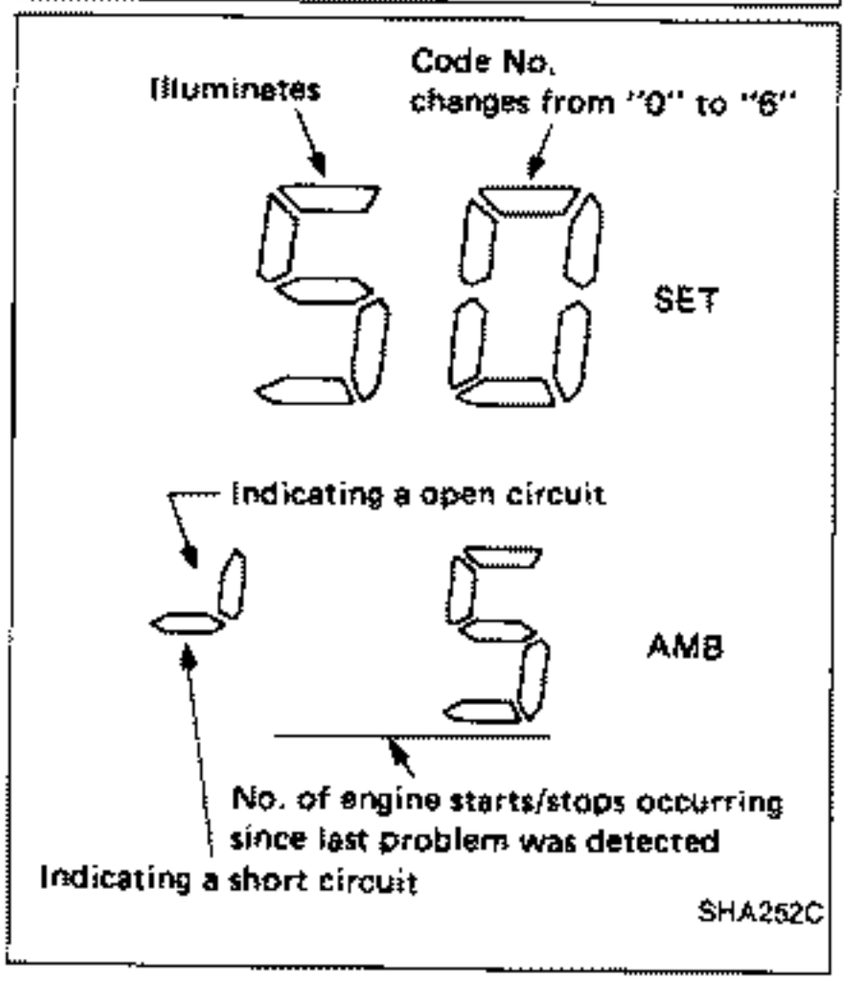

Code No.	Sensor	Open circuit	Short circuit
50	Ambient sensor	Less than –70°C (–94°F)	Greater than 141°C (286°F)
51	Room upper sensor	Less than –38°C (–36°F)	Greater than 141°C (286°F)
52	Room lower sensor	Less than –38°C (–36°F)	Greater than 141°C (286°F)
53	DEF duct sensor	Less than –38°C (–36°F)	Greater than 141°C (286°F)
54	VENT duct sensor	Less than –38°C (–36°F)	Greater than 141°C (286°F)
55	Floor duct sensor	Less than –38°C (–36°F)	Greater than 141°C (286°F)
56	Sunload sensor	Open circuit can not be detected by self-diagnosis.	Greater than 1.784 kW (1,534 kcal/h, 6,087 BTU/h)/m^2 [19.19 kW (16,506 kcal/h, 65,502 BTU/h)/sq ft]

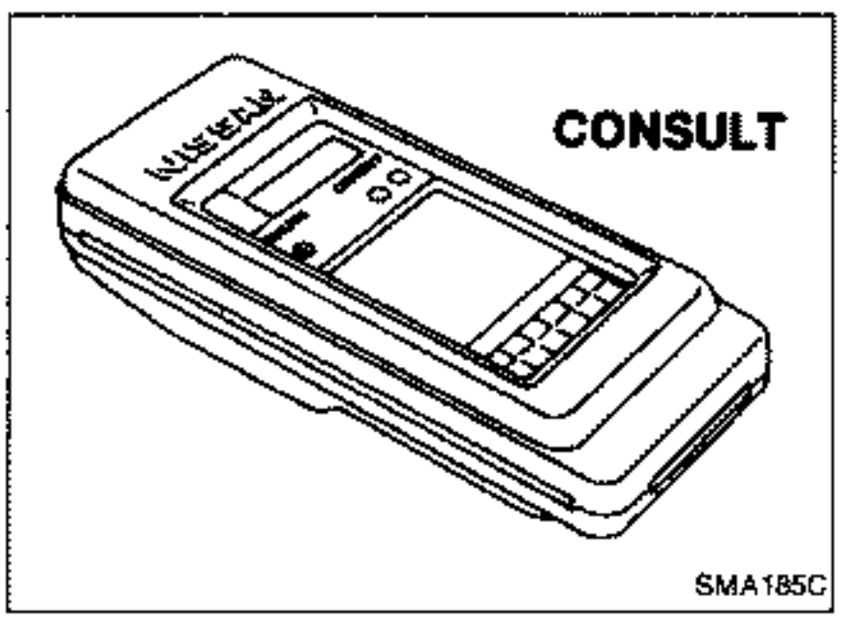

Consult

CONSULT INSPECTION PROCEDURE

1. Turn off ignition switch.
2. Connect "CONSULT" to diagnostic connector.
   (Diagnostic connector is located in left dash side panel.)

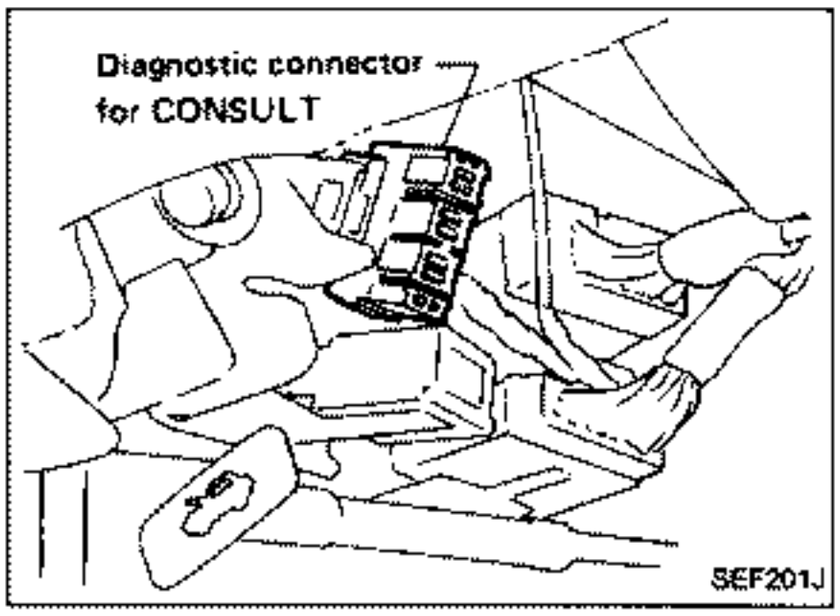

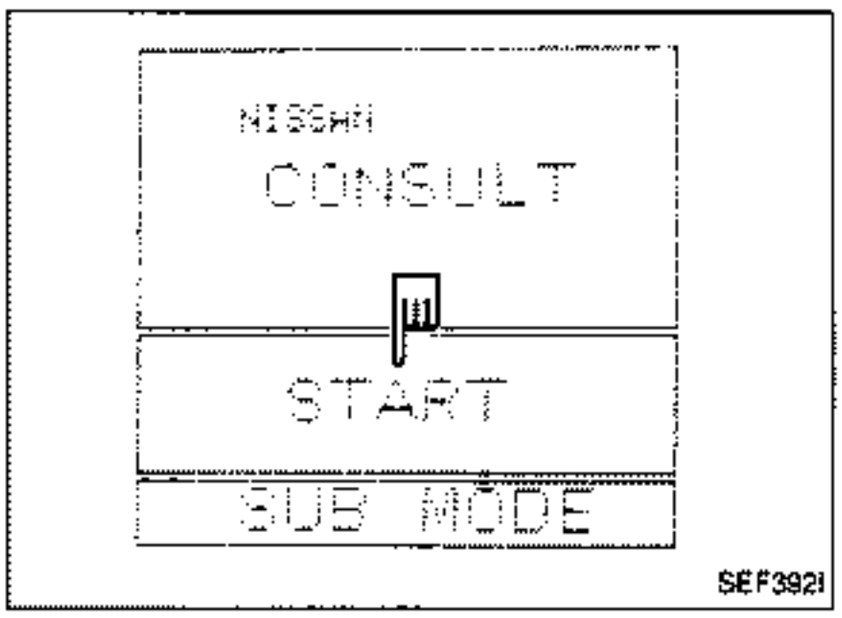

3. Turn on ignition switch.
4. Touch "START".

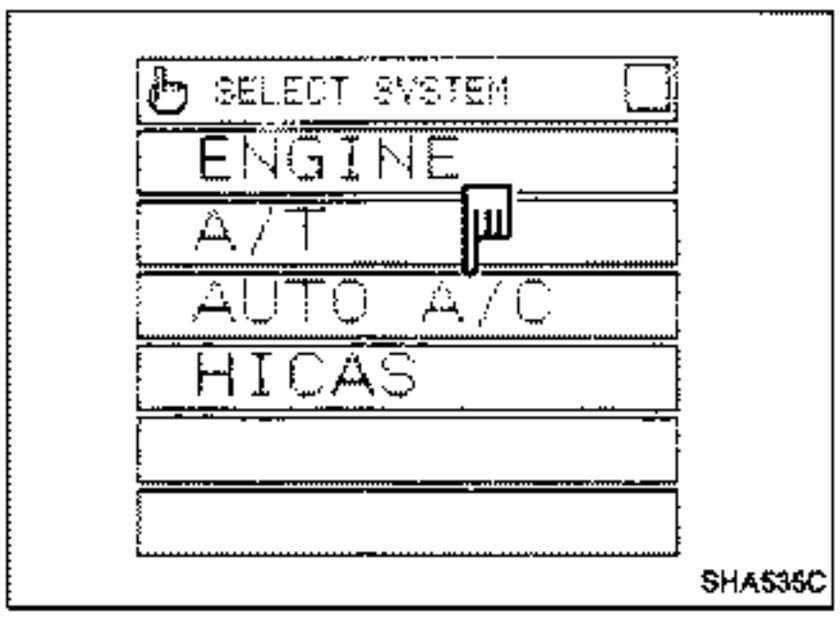

5. Touch "AUTO A/C".

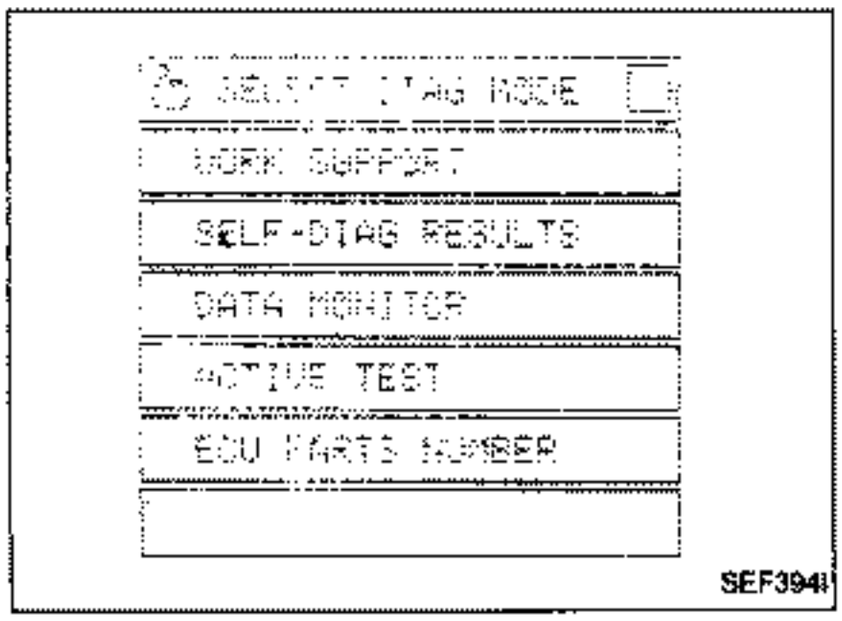

6. Perform each diagnostic mode according to the inspection sheet as follows:

For further information, read the CONSULT Operation Manual.

Preliminary Check

PRELIMINARY CHECK 1

Air outlet does not change.

CHECK SENSOR CIRCUIT.

Read out trouble data with CONSULT.

or

Set up self-diagnosis STEP 4. Is each sensor circuit normal?

N.G. →

CHECK SENSOR CIRCUIT IN DETAIL ACCORDING TO THE DIAGNOSTIC PROCEDURE BELOW CORRESPONDING TO EACH CODE NO.

CONSULT indication	Self-diagnosis code No.	Data	How to repair	Reference page
Ambient sensor circuit is open	50	°	Go to Diagnostic procedure 2.	HA-138
Ambient sensor circuit is shorted.	51	–	Go to Diagnostic procedure 3.	HA-139
Upper in-vehicle sensor circuit is open.	52	°	Go to Diagnostic procedure 4.	HA-140
Upper in-vehicle sensor circuit is shorted.	53	–	Go to Diagnostic procedure 5.	HA-141
Lower in-vehicle sensor circuit is open.	54	°	Go to Diagnostic procedure 6.	HA-142
Lower in-vehicle sensor circuit is shorted.	55	–	Go to Diagnostic procedure 7.	HA-143
Defroster (duct) sensor circuit is open.	56	°	Go to Diagnostic procedure 8.	HA-144
Defroster (duct) sensor circuit is shorted.	57	–	Go to Diagnostic procedure 9.	HA-145
Vent (duct) sensor circuit is open.	58	°	Go to Diagnostic procedure 10.	HA-146
Vent (duct) sensor circuit is shorted.	59	–	Go to Diagnostic procedure 11.	HA-147
Floor (duct) sensor circuit is open.	60	°	Go to Diagnostic procedure 12.	HA-148
Floor (duct) sensor circuit is shorted.	61	–	Go to Diagnostic procedure 13.	HA-149
Sunload sensor circuit is shorted.	66	–	Go to Diagnostic procedure 14.	HA-150

When malfunctioning sensor circuit, ambient sensor, in-vehicle sensor, and duct sensors are suspected, it is useful to check temperature detected by each sensor with self-diagnosis STEP 1 to confirm the temperature is within normal range before performing Diagnostic Procedures.

O.K.

CHECK MODE DOOR OPERATION.

Set up "ACTIVE TEST" mode with CONSULT.

or

Set up self-diagnosis STEP 2.

Does air outlet change according to each mode?

Set mode	DEF	HEAT	B/L	VENT
Code No.	3X	4X	5X	6X
Air outlet	DEF	FOOT/ DEF	FOOT/ VENT	VENT

Refer to **AIR DISTRIBUTION.**

O.K.

Air outlet control system is normal.
Refer to **Outlet door control specification.**

N.G.

CHECK SIDE LINK MECHANISM.
Refer to **DOOR CONTROL — Auto Air Conditioner.**

N.G. → Repair or adjust.

O.K.

Go to **Diagnostic Procedure 17 or 18.**

Preliminary Check (Cont'd)

PRELIMINARY CHECK 2

Intake door does not change.

CHECK SENSOR CIRCUIT.

Read out trouble data with CONSULT.

or

Set up self-diagnosis STEP 4. Is each sensor circuit normal?

N.G. →

CHECK SENSOR CIRCUIT IN DETAIL ACCORDING TO THE DIAGNOSTIC PROCEDURE BELOW CORRESPONDING TO EACH CODE NO.

CONSULT indication	Self-diagnosis code No.	Self-diagnosis data	How to repair	Reference page
Ambient sensor circuit is open	51	0	Go to Diagnostic procedure 2.	HA-138
Ambient sensor circuit is shorted.	52	∞	Go to Diagnostic procedure 3.	HA-139
Upper in-vehicle sensor circuit is open.	53	0	Go to Diagnostic procedure 4.	HA-140
Upper in-vehicle sensor circuit is shorted.	54	∞	Go to Diagnostic procedure 5.	HA-141
Lower in-vehicle sensor circuit is open.	55	0	Go to Diagnostic procedure 6.	HA-142
Lower in-vehicle sensor circuit is shorted.	56	∞	Go to Diagnostic procedure 7.	HA-143
Defroster (duct) sensor circuit is open.	57	0	Go to Diagnostic procedure 8.	HA-144
Defroster (duct) sensor circuit is shorted.	58	∞	Go to Diagnostic procedure 9.	HA-145
Vent (duct) sensor circuit is open.	59	0	Go to Diagnostic procedure 10.	HA-146
Vent (duct) sensor circuit is shorted.	5A	∞	Go to Diagnostic procedure 11.	HA-147
Floor (duct) sensor circuit is open.	5B	0	Go to Diagnostic procedure 12.	HA-148
Floor (duct) sensor circuit is shorted.	5C	∞	Go to Diagnostic procedure 13.	HA-149
Sunload sensor circuit is shorted.	60	∞	Go to Diagnostic procedure 14.	HA-150

When malfunctioning sensor circuit, ambient sensor, in-vehicle sensor, and duct sensors are suspected, it is useful to check temperature detected by each sensor with self-diagnosis STEP 1 to confirm the temperature is within normal range before performing Diagnostic Procedures.

O.K.

CHECK INTAKE DOOR MOTOR.

Set up "ACTIVE TEST" mode with CONSULT.

or

Set up self-diagnosis STEP 2.

Does intake air change according to each ordered position?

Set position	FRE		FRE/REC	REC
Code No.	3X	4X	5X	6X
Air intake	FRE		FRE/REC	REC

O.K.

Intake door control system is normal.
Refer to **Intake door control specification.**

N.G.

CHECK INTAKE DOOR ROD or LEVER MECHANISM.
Refer to **DOOR CONTROL — Auto Air Conditioner.**

N.G. → Repair or adjust.

O.K.

Go to **Diagnostic Procedure 16.**

Preliminary Check (Cont'd)

PRELIMINARY CHECK 3

Insufficient cooling

- Read out self-diagnosis result with CONSULT or perform self-diagnosis STEP 4 before referring to the following flow chart.

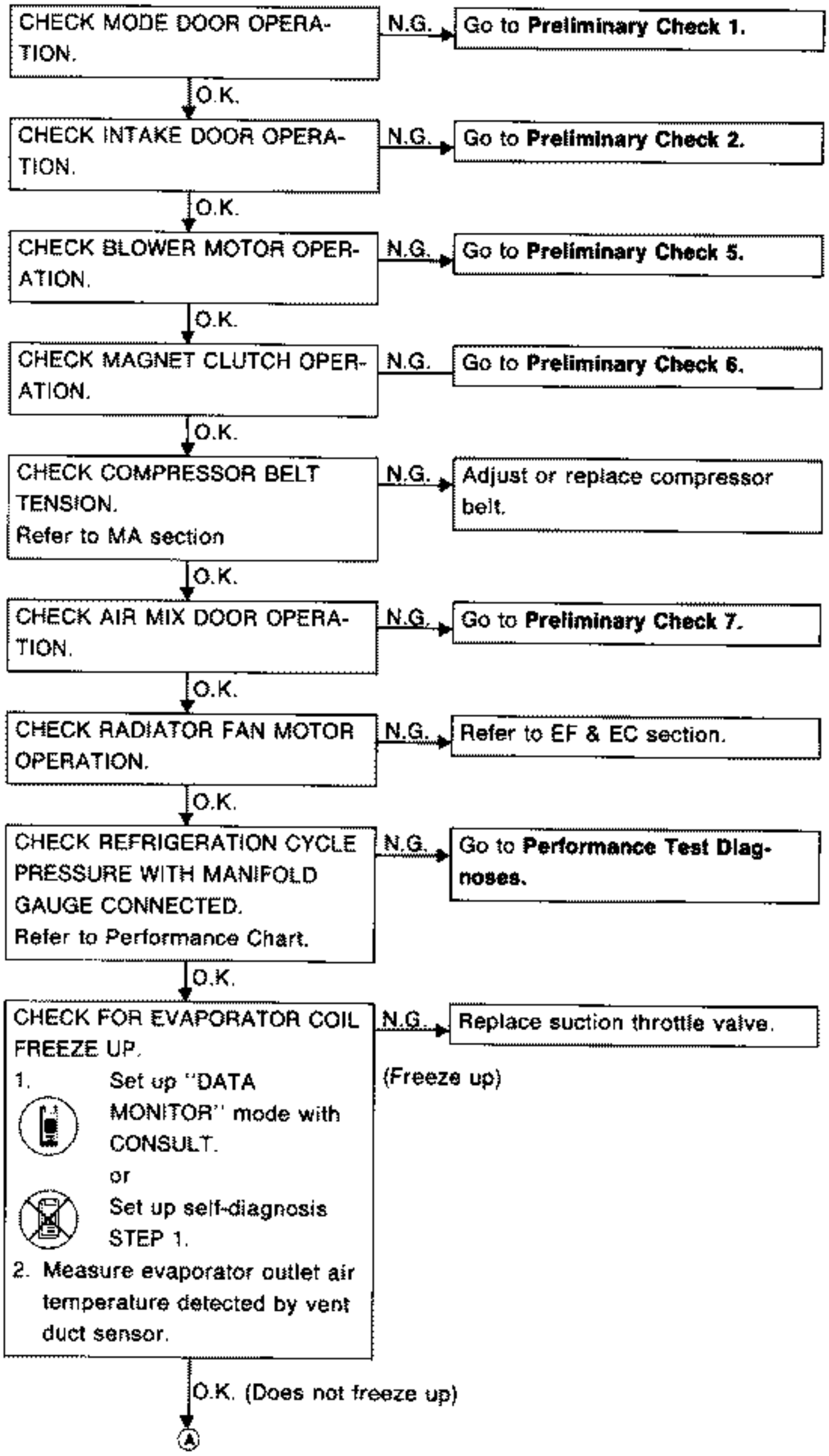

Preliminary Check (Cont'd)

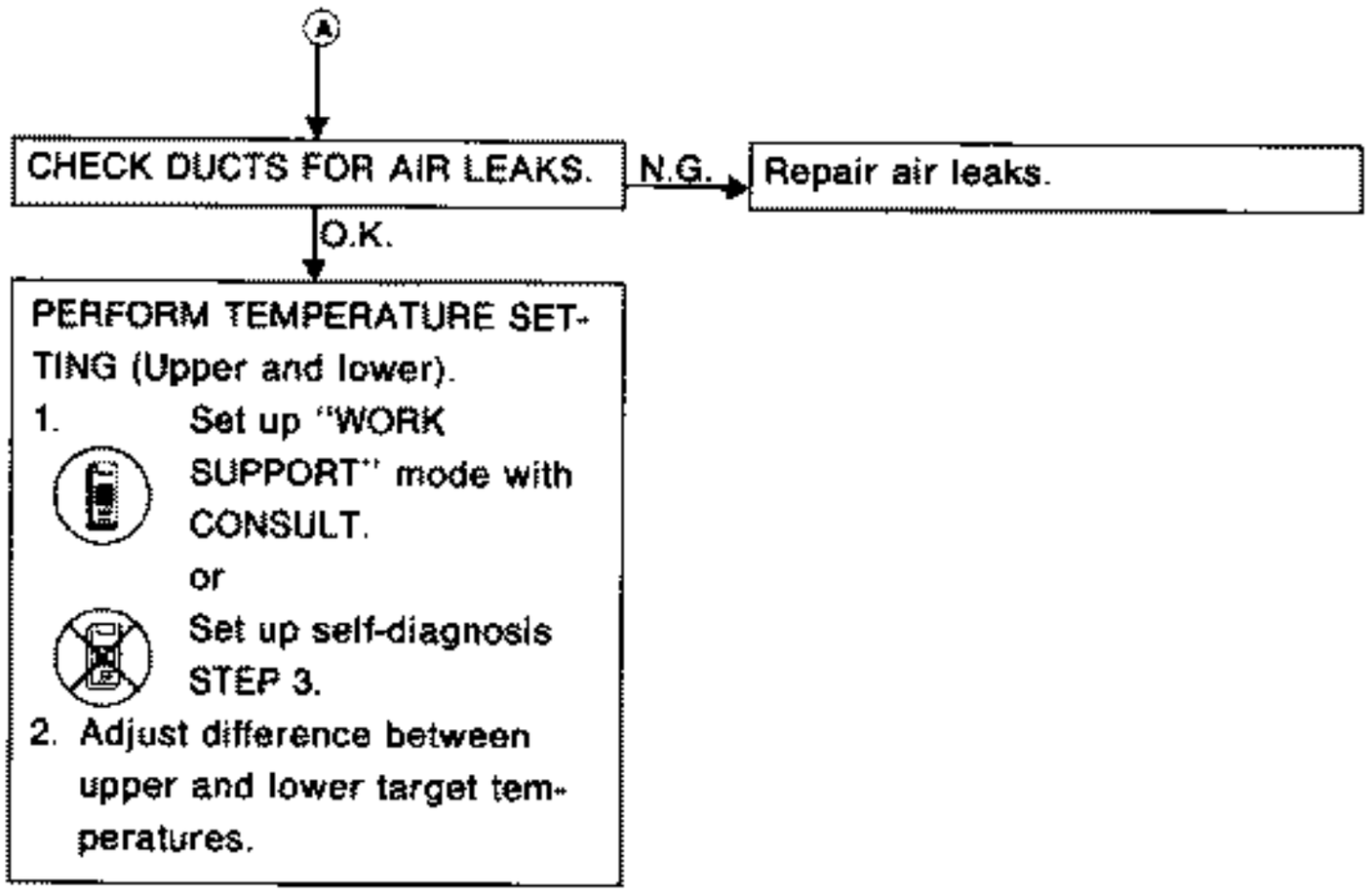

Preliminary Check (Cont'd)

PRELIMINARY CHECK 4

Insufficient heating

- Check coolant level, engine temperature and heater hoses and read out self-diagnosis result with CONSULT or perform self-diagnosis STEP 4 before referring to the following flow chart.

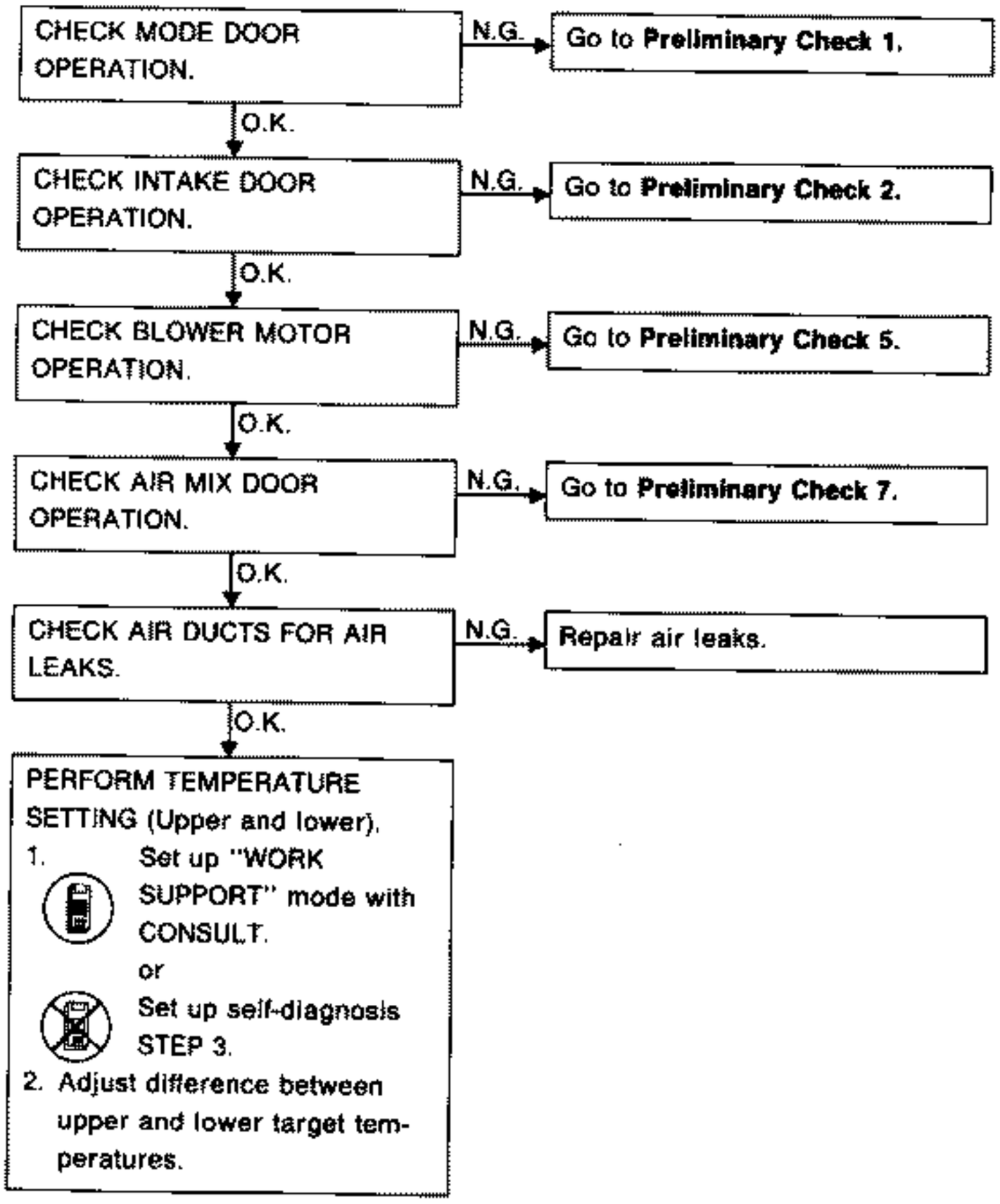

Preliminary Check (Cont'd)

PRELIMINARY CHECK 5

Blower motor operation is malfunctioning.

CHECK SENSOR CIRCUIT.

Read out trouble data with CONSULT.

or

Set up self-diagnosis STEP 4. Is each sensor circuit normal?

N.G. →

CHECK SENSOR CIRCUIT IN DETAIL ACCORDING TO THE DIAGNOSTIC PROCEDURE BELOW CORRESPONDING TO EACH CODE NO.

CONSULT indication	Self-diagnosis code No.	data	How to repair	Reference page
Ambient sensor circuit is open	51	0	Go to Diagnostic procedure 2.	HA-138
Ambient sensor circuit is shorted.	52	0	Go to Diagnostic procedure 3.	HA-139
Upper in-vehicle sensor circuit is open.	53	0	Go to Diagnostic procedure 4.	HA-140
Upper in-vehicle sensor circuit is shorted.	54	0	Go to Diagnostic procedure 5.	HA-141
Lower in-vehicle sensor circuit is open.	55	0	Go to Diagnostic procedure 6.	HA-142
Lower in-vehicle sensor circuit is shorted.	56	0	Go to Diagnostic procedure 7.	HA-143
Defroster (duct) sensor circuit is open.	57	0	Go to Diagnostic procedure 8.	HA-144
Defroster (duct) sensor circuit is shorted.	58	0	Go to Diagnostic procedure 9.	HA-145
Vent (duct) sensor circuit is open.	59	0	Go to Diagnostic procedure 10.	HA-146
Vent (duct) sensor circuit is shorted.	60	0	Go to Diagnostic procedure 11.	HA-147
Floor (duct) sensor circuit is open.	61	0	Go to Diagnostic procedure 12.	HA-148
Floor (duct) sensor circuit is shorted.	62	0	Go to Diagnostic procedure 13.	HA-149
Sunload sensor circuit is shorted.	63	0	Go to Diagnostic procedure 14.	HA-150

When malfunctioning sensor circuit, ambient sensor, in-vehicle sensor, and duct sensors are suspected, it is useful to check temperature detected by each sensor with self-diagnosis STEP 1 to confirm the temperature is within normal range before performing Diagnostic Procedures.

O.K.

CHECK BLOWER MOTOR OPERATION.

Set up "ACTIVE TEST" mode with CONSULT.

or

Set up self-diagnosis STEP 2.

Does blower motor speed change according to each ordered fan speed?

Set fan speed	4V	6V	9V	12V
Code No.	X3	X4	X5	X6
Fan speed	Lo	Middle Lo	Middle HI	HI

O.K. ↓

N.G. → Go to **Diagnostic Procedure 25.**

Is engine coolant temperature below 40°C (104°F) and foot duct temperature below 30°C (86°F)?

N.G. → Blower motor operation is normal.
Refer to **Fan speed control specification.**

O.K. ↓

IS BLOWER MOTOR CONTROLLED UNDER FAN STARTING SPEED CONTROL?
Refer to **Starting fan speed control specification.**

No → Check engine temperature sensor control circuit.
Refer to EF & EC section.

Yes ↓

Blower motor operation is normal.

Preliminary Check (Cont'd)

PRELIMINARY CHECK 6

Magnet clutch does not engage.

CHECK SENSOR CIRCUIT.

Read out trouble data with CONSULT.

or

Set up self-diagnosis STEP 4. Is each sensor circuit normal?

N.G. →

CHECK SENSOR CIRCUIT IN DETAIL ACCORDING TO THE DIAGNOSTIC PROCEDURE BELOW CORRESPONDING TO EACH CODE NO.

CONSULT indication	Self-diagnosis code No.	data	How to repair	Reference page
Ambient sensor circuit is open	51	0	Go to Diagnostic procedure 2.	HA-138
Ambient sensor circuit is shorted.	52	1	Go to Diagnostic procedure 3.	HA-139
Upper in-vehicle sensor circuit is open.	53	2	Go to Diagnostic procedure 4.	HA-140
Upper in-vehicle sensor circuit is shorted.	54	3	Go to Diagnostic procedure 5.	HA-141
Lower in-vehicle sensor circuit is open.	57	8	Go to Diagnostic procedure 6.	HA-142
Lower in-vehicle sensor circuit is shorted.	58	9	Go to Diagnostic procedure 7.	HA-143
Defroster (duct) sensor circuit is open.	61	4	Go to Diagnostic procedure 8.	HA-144
Defroster (duct) sensor circuit is shorted.	62	5	Go to Diagnostic procedure 9.	HA-145
Vent (duct) sensor circuit is open.	63	6	Go to Diagnostic procedure 10.	HA-146
Vent (duct) sensor circuit is shorted.	64	7	Go to Diagnostic procedure 11.	HA-147
Floor (duct) sensor circuit is open.	65	A	Go to Diagnostic procedure 12.	HA-148
Floor (duct) sensor circuit is shorted.	66	B	Go to Diagnostic procedure 13.	HA-149
Sunload sensor circuit is shorted.	56	C	Go to Diagnostic procedure 14.	HA-150

When malfunctioning sensor circuit, ambient sensor, in-vehicle sensor, and duct sensors are suspected, it is useful to check temperature detected by each sensor with self-diagnosis STEP 1 to confirm the temperature is within normal range before performing Diagnostic Procedures.

O.K.

CHECK MAGNET CLUTCH OPERATION.

Set up "ACTIVE TEST" mode with CONSULT.

or

Set up self-diagnosis STEP 2.

Check if magnet clutch engages according to order from CONSULT or each code No.

Set magnet clutch operation	ON		OFF	
Code No.	3X	4X	5X	6X
Magnet clutch operation	ON		OFF	

O.K.

Magnet clutch control system is normal.
Refer to **MAGNET CLUTCH CONTROL.**

N.G.

CHECK REFRIGERANT.
Connect manifold gauge then check system pressure.

N.G. → Check for refrigerant leaks.

O.K.

Go to **Diagnostic Procedure 19.**

Preliminary Check (Cont'd)

PRELIMINARY CHECK 7

Discharged air temperature does not change.

CHECK SENSOR CIRCUIT.

Read out trouble data with CONSULT.

or

Set up self-diagnosis STEP 4. Is each sensor circuit normal?

N.G. →

CHECK SENSOR CIRCUIT IN DETAIL ACCORDING TO THE DIAGNOSTIC PROCEDURE BELOW CORRESPONDING TO EACH CODE NO.

CONSULT indication	Self-diagnosis code No.	Self-diagnosis data	How to repair	Reference page
Ambient sensor circuit is open	51	9	Go to Diagnostic procedure 2.	HA-138
Ambient sensor circuit is shorted.	50	1	Go to Diagnostic procedure 3.	HA-139
Upper in-vehicle sensor circuit is open.	57	0	Go to Diagnostic procedure 4.	HA-140
Upper in-vehicle sensor circuit is shorted.	56	1	Go to Diagnostic procedure 5.	HA-141
Lower in-vehicle sensor circuit is open.	55	0	Go to Diagnostic procedure 6.	HA-142
Lower in-vehicle sensor circuit is shorted.	54	1	Go to Diagnostic procedure 7.	HA-143
Defroster (duct) sensor circuit is open.	53	0	Go to Diagnostic procedure 8.	HA-144
Defroster (duct) sensor circuit is shorted.	52	1	Go to Diagnostic procedure 9.	HA-145
Vent (duct) sensor circuit is open.	59	0	Go to Diagnostic procedure 10.	HA-146
Vent (duct) sensor circuit is shorted.	58	1	Go to Diagnostic procedure 11.	HA-147
Floor (duct) sensor circuit is open.	5D	0	Go to Diagnostic procedure 12.	HA-148
Floor (duct) sensor circuit is shorted.	5C	1	Go to Diagnostic procedure 13.	HA-149
Sunload sensor circuit is shorted.	5E	1	Go to Diagnostic procedure 14.	HA-150

When malfunctioning sensor circuit, ambient sensor, in-vehicle sensor, and duct sensors are suspected, it is useful to check temperature detected by each sensor with self-diagnosis STEP 1 to confirm the temperature is within normal range before performing Diagnostic Procedures.

O.K.

CHECK AIR MIX DOOR OPERATION.

Set up "ACTIVE TEST" mode with CONSULT.

or

Set up self-diagnosis STEP 2.

Check if discharge air temperature changes as in following chart.

Set discharge air temperature	Full Hot		30°C (86°F)	Full Cool
Code No.	3X	4X	5X	6X
Discharge air temperature	Full Hot		30°C (86°F)	Full Cool

O.K.

Air mix door control system is normal.
Refer to **Specification of air mix door control.**

N.G.

CHECK AIR MIX DOOR MECHANISM.
Refer to **DOOR CONTROL.**

N.G. → Repair or adjust.

O.K.

Go to **Diagnostic Procedure 15.**

PRELIMINARY CHECK 8

Noise

Refer to page HA-71.

Main Power Supply and Ground Circuit Check

POWER SUPPLY CIRCUIT CHECK FOR A/C SYSTEM

Check power supply circuit for air conditioning system.

Refer to "POWER SUPPLY ROUTING" in section EL and A/C ELECTRICAL CIRCUIT — Auto Air Conditioner.

AUTO AMP. REMOVAL

1. Remove driver side instrument lower lid.
2. Remove vent duct.
3. Remove auto amp. with harness connected.

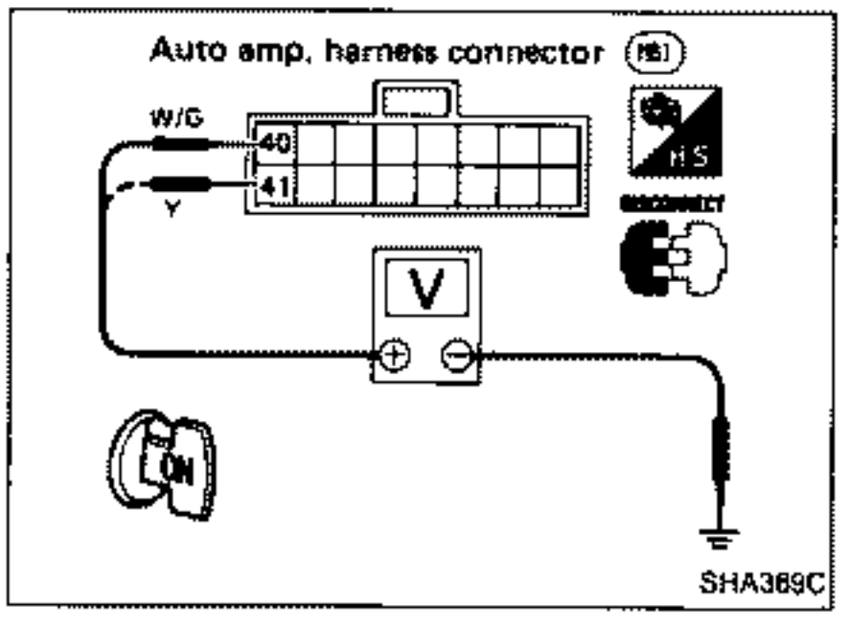

AUTO AMP. CHECK

1. Disconnect auto amp. harness connectors.
2. Connect voltmeter from harness side.
3. Measure voltage across terminal No. (40) or No. (41) and body ground.

Voltmeter terminal		Voltage (Approx.)
⊕	⊖	
(40)	Body ground	12V
(41)		

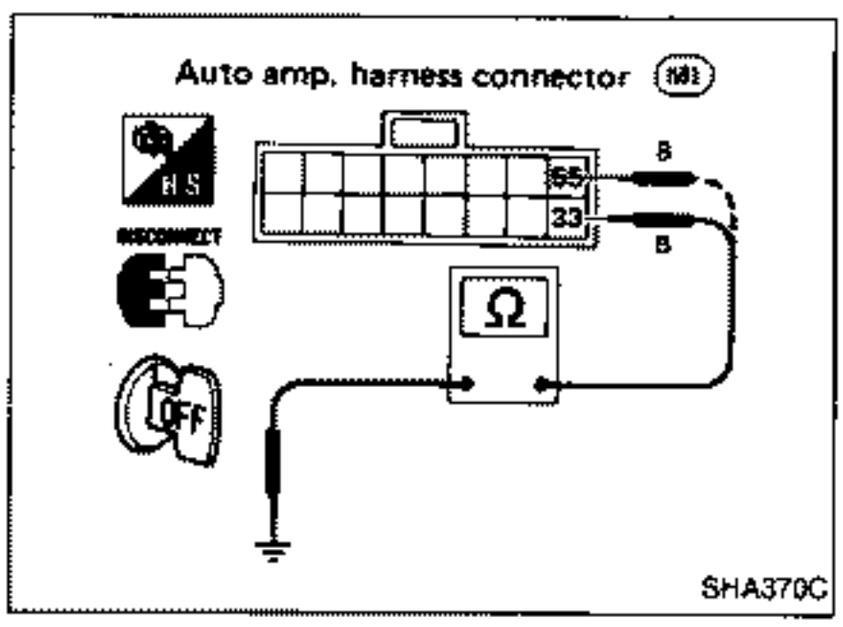

Check body ground circuit for control unit with ignition switch OFF

1. Disconnect auto amp. harness connector.
2. Connect ohmmeter from harness side.
3. Check continuity between terminal No. (33) or (55) and body ground.

Harness Layout for A/C System

Engine compartment

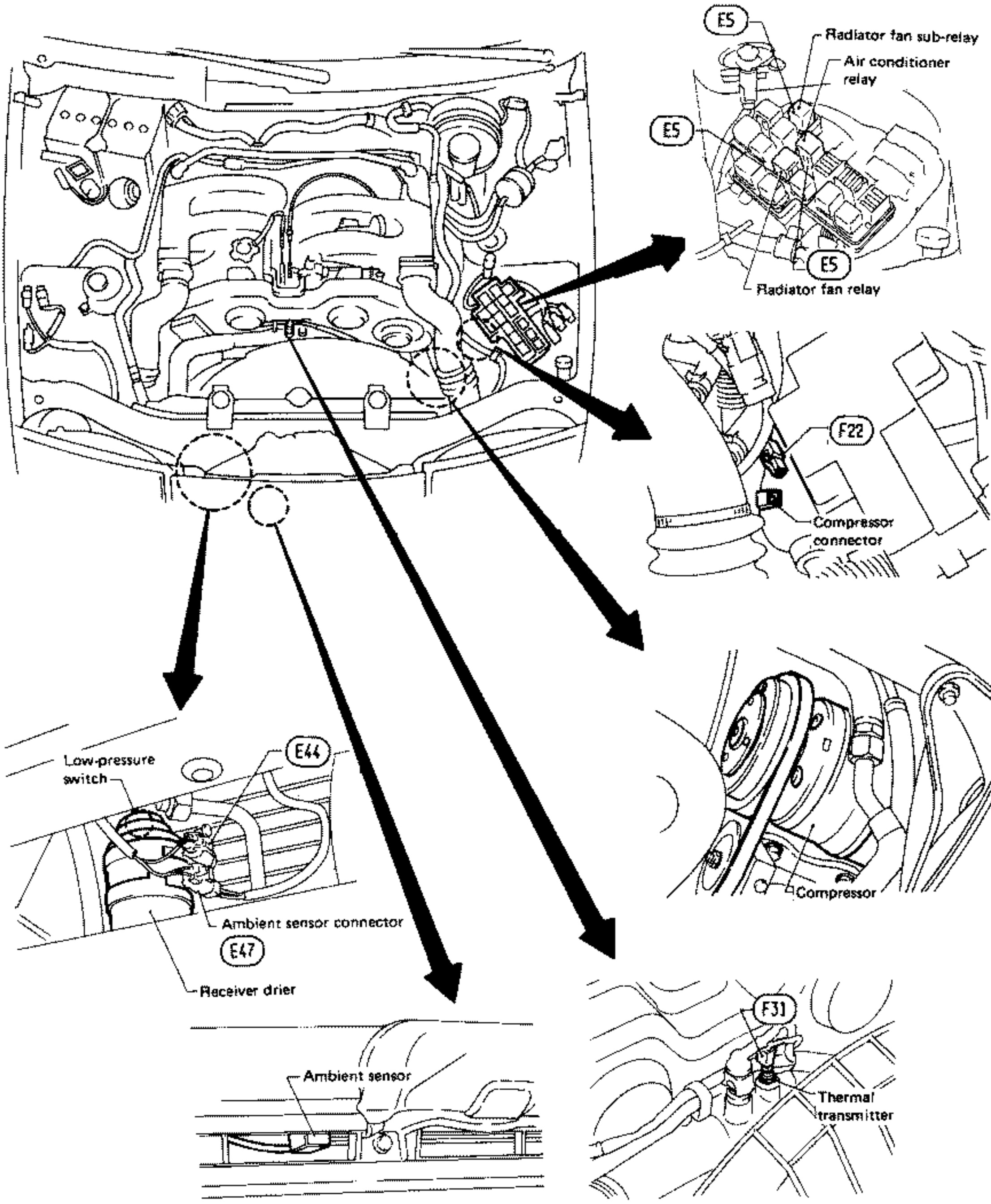

SHA726C

Harness Layout for A/C System (Cont'd)

Passenger compartment

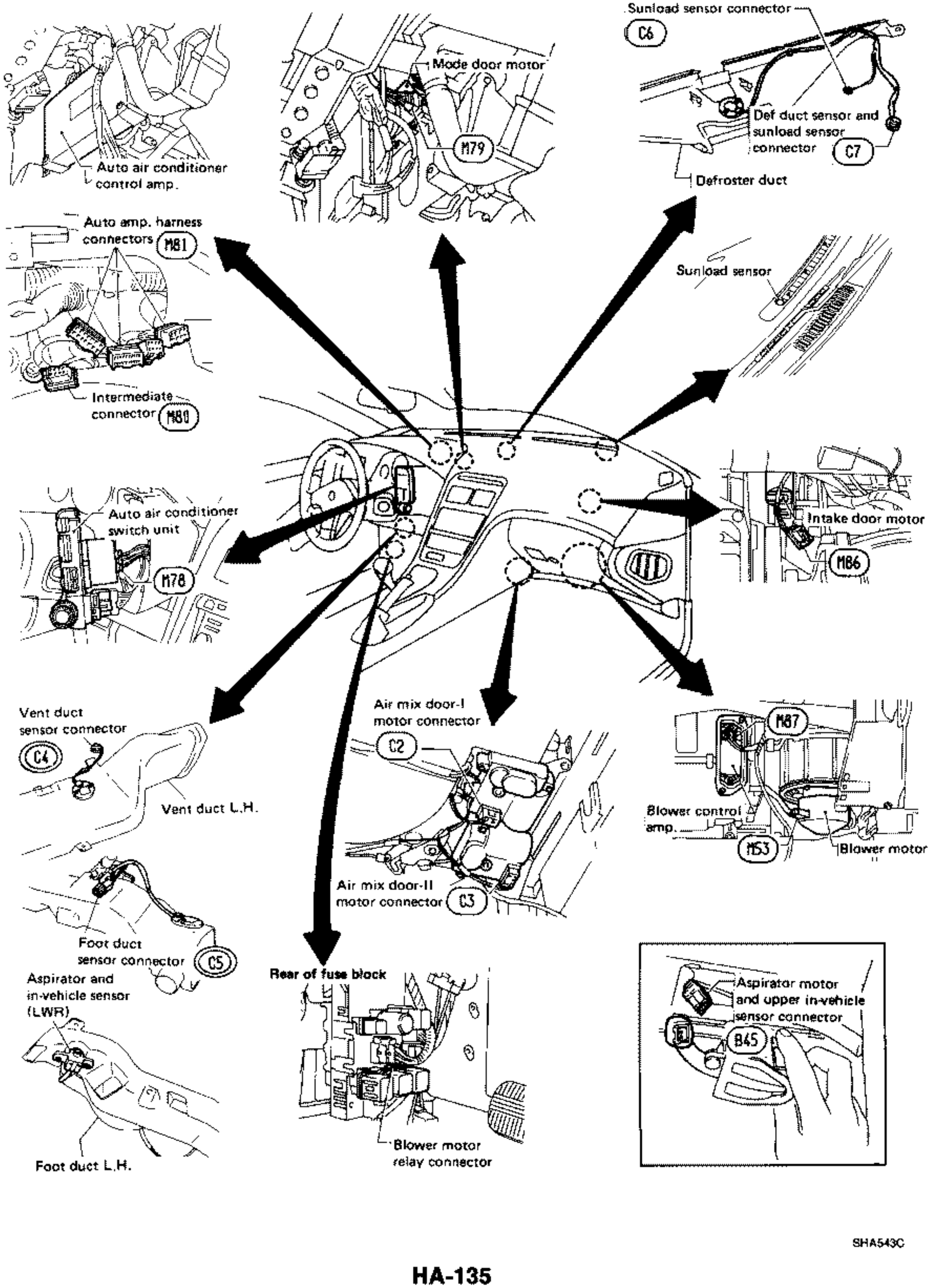

SHA543C

Circuit Diagram for Quick Pinpoint Check

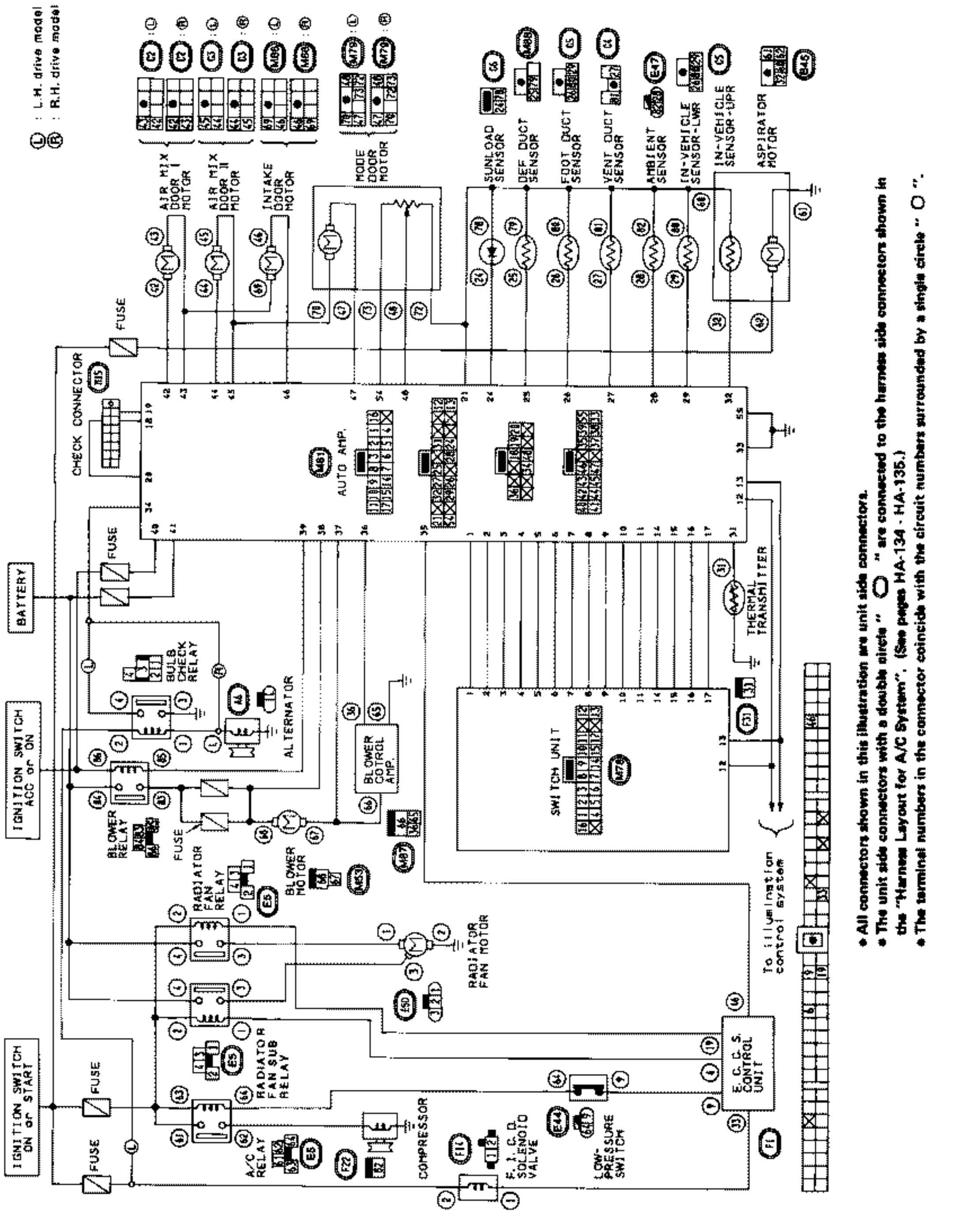

- All connectors shown in this illustration are unit side connectors.
- The unit side connectors with a double circle " ◎ " are connected to the harness side connectors shown in the "Harness Layout for A/C System". (See pages HA-134 - HA-135.)
- The terminal numbers in the connector coincide with the circuit numbers surrounded by a single circle " ○ ".

SHA696C

Diagnostic Procedure 1

SYMPTOM: Self-diagnosis detects intermittent short or open circuit in each sensor circuit.

Check each connector connection as shown in the following table, and check the condition of each wire.

Malfunctioning circuit	Connector No. to be checked			
	Main harness	Engine room harness	Body harness	A/C sub-harness
Ambient sensor (L.H.D. model)	M59 M81	E47 E112		
Ambient sensor (R.H.D. model)	M8 M81	E47 E103		
Upper in-vehicle sensor (L.H.D. model)	M4 M81		B2 B45	
Upper in-vehicle sensor (R.H.D. model)	M5 M81		B3	
Lower in-vehicle sensor	M80 M81			C1 C5
DEF duct sensor	M81 M88			
VENT duct sensor	M80 M81			C1 C4
Floor duct sensor	M80 M81			C1 C5
Sunload sensor	M81 M88			C6 C7

A

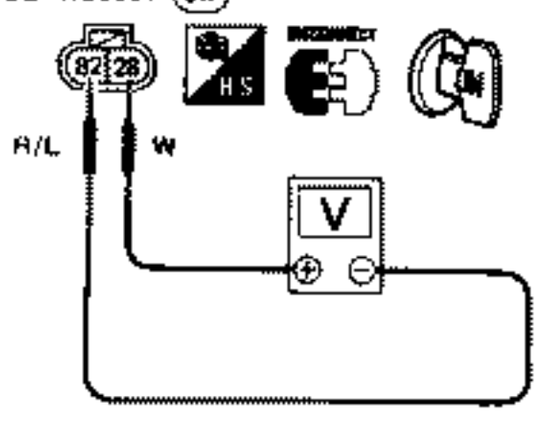

B

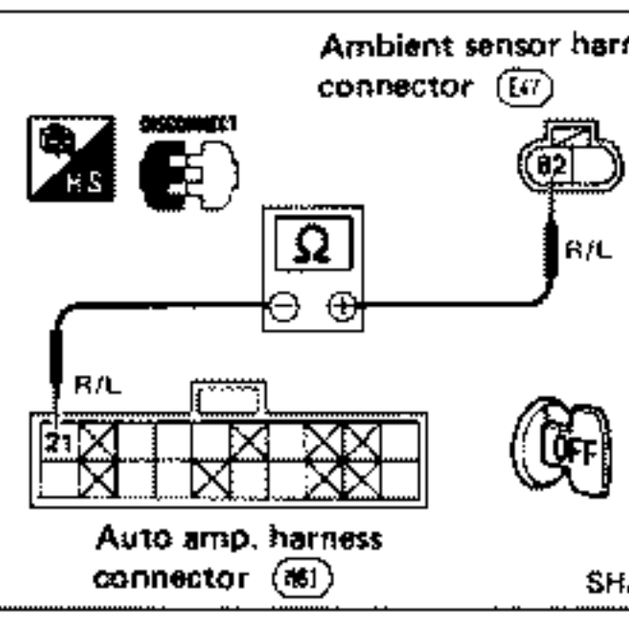

C

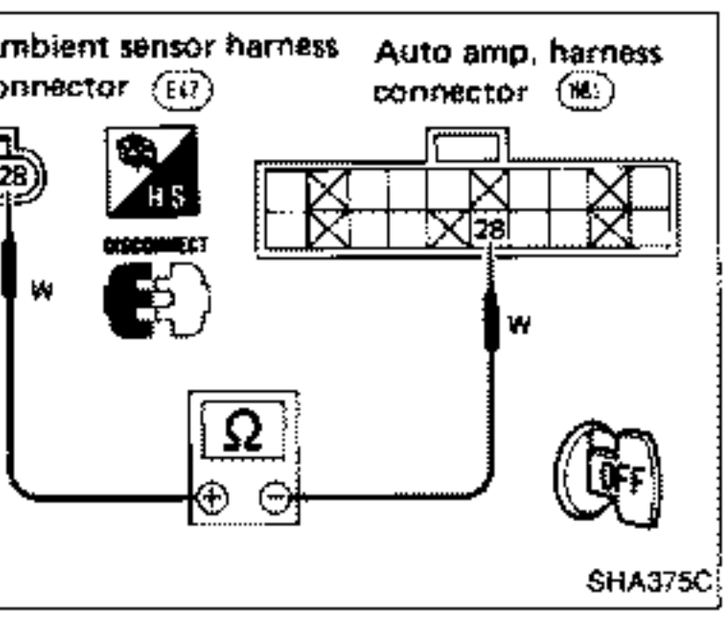

Diagnostic Procedure 2

SYMPTOM: Ambient sensor circuit is open. (CONSULT or self-diagnosis STEP 4 indicates this.)

A

CHECK AMBIENT SENSOR CIRCUIT BETWEEN AMBIENT SENSOR AND AUTO AMP.
Disconnect ambient sensor harness connector.
Do approximately 5 volts exist between ambient sensor harness connector terminal No. 28 and 82?

N.G. → Disconnect auto amp. harness connector.

C Note

Check circuit continuity between ambient sensor harness connector terminal No. 28 and auto amp. harness connector terminal No. 28.

O.K. → Replace auto amp.

O.K.

Disconnect auto amp. harness connector.

B Note

Check circuit continuity between ambient sensor harness connector terminal No. 82 and auto amp. harness connector terminal No. 21.

O.K.

CHECK AMBIENT SENSOR. (Refer to Electrical Components Inspection.)

N.G. → Replace ambient sensor.

O.K.

Replace auto amp.

Note:
If the result is N.G. after checking circuit continuity, repair harness or connector.

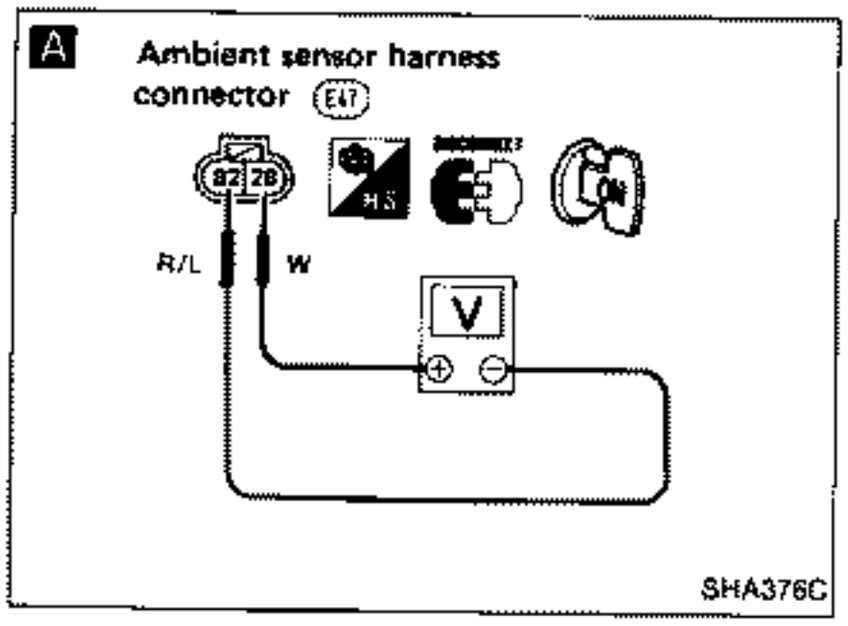

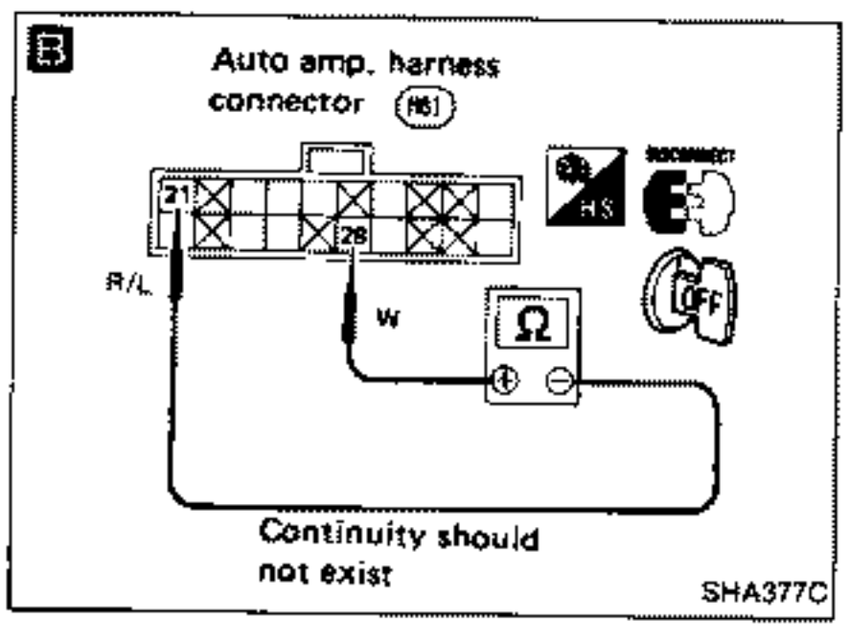

Diagnostic Procedure 3

SYMPTOM: Ambient sensor circuit is shorted. (CONSULT or self-diagnosis STEP 4 indicates this.)

A

CHECK AMBIENT SENSOR CIRCUIT BETWEEN AMBIENT SENSOR AND AUTO AMP.
Disconnect ambient sensor harness connector.
Do approximately 5 volts exist between ambient sensor harness connector terminal No. 28 and 82?

N.G. → Disconnect auto amp. harness connector.

B

Check the circuit between auto amp. harness connector terminal No. 28 and 21 is not shorted.

Note

O.K. → Replace auto amp.

O.K. →

CHECK AMBIENT SENSOR. (Refer to Electrical Components Inspection.)

N.G. → Replace ambient sensor.

O.K. →

Replace auto amp.

A In-vehicle upper sensor harness connector (B45)

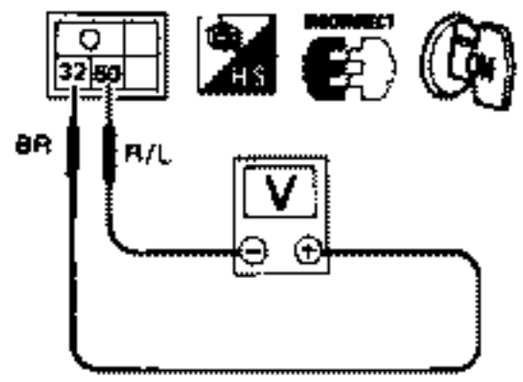

SHA378C

B In-vehicle upper sensor harness connector (B45)

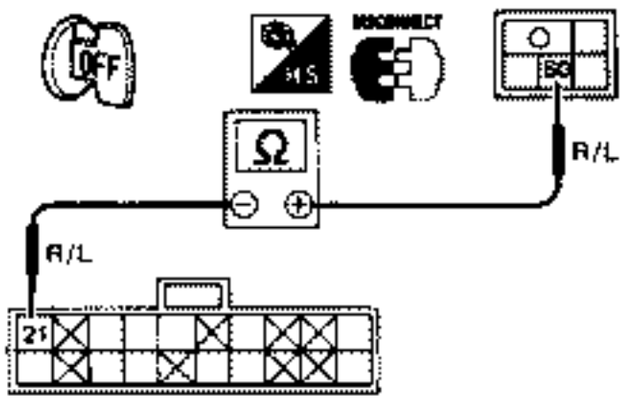

Auto amp. harness connector

SHA379C

C In-vehicle upper sensor harness connector (B45)

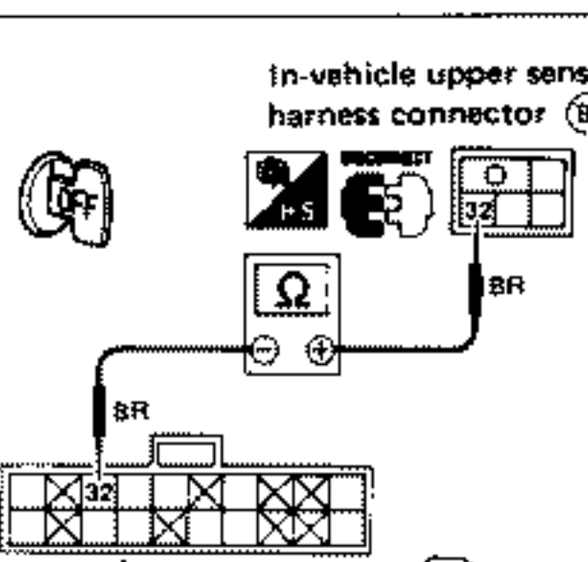

Auto amp. harness connector (M1)

SHA380C

Diagnostic Procedure 4

SYMPTOM: Upper in-vehicle sensor circuit is open. (CONSULT or self-diagnosis STEP 4 indicates this.)

A

CHECK IN-VEHICLE UPPER SENSOR CIRCUIT BETWEEN IN-VEHICLE UPPER SENSOR AND AUTO AMP.
Disconnect in-vehicle upper sensor harness connector.
Do approximately 5 volts exist between in-vehicle upper sensor harness connector terminal No. (32) and (60)?

N.G. → Disconnect auto amp. harness connector.

C
Note
Check circuit continuity between in-vehicle upper sensor harness connector terminal No. (32) and auto amp. harness connector terminal No. (32).

O.K. ↓

Replace auto amp.

O.K. ↓

B
Note
Disconnect auto amp. harness connector.
Check circuit continuity between in-vehicle upper sensor harness connector terminal No. (60) and auto amp. harness connector terminal No. (21).

O.K. ↓

CHECK IN-VEHICLE UPPER SENSOR.
(Refer to Electrical Components Inspection.)

N.G. → Replace in-vehicle upper sensor.

O.K. ↓

Replace auto amp.

Note:
If the result is N.G. after checking circuit continuity, repair harness or connector.

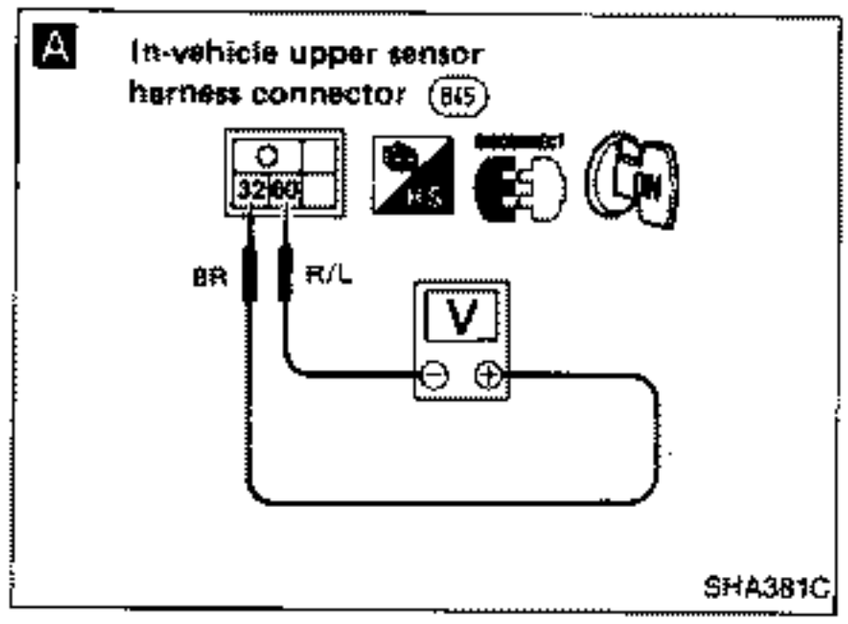

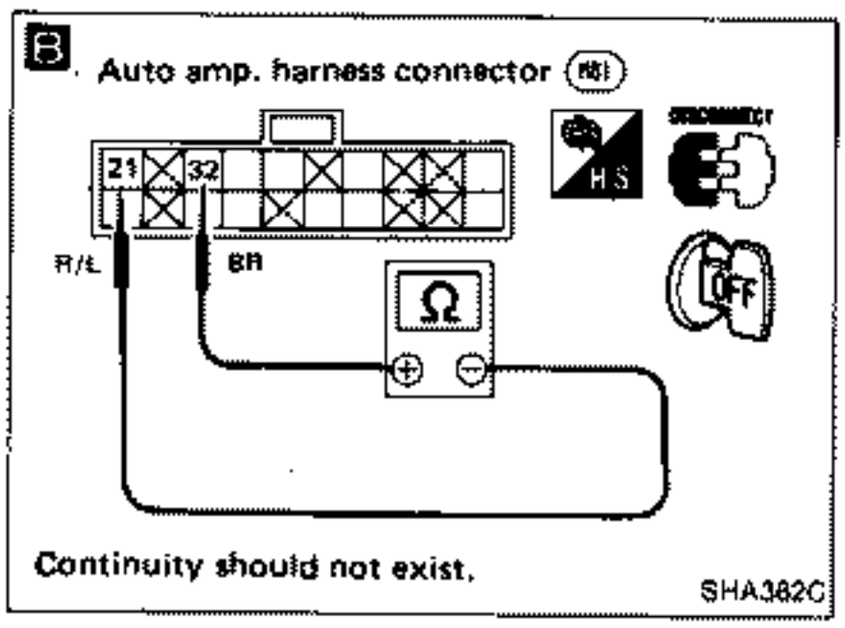

Diagnostic Procedure 5

SYMPTOM: Upper in-vehicle sensor circuit is shorted. (CONSULT or self-diagnosis STEP 4 Indicates this.)

A

CHECK IN-VEHICLE UPPER SENSOR CIRCUIT BETWEEN IN-VEHICLE UPPER SENSOR AND AUTO AMP.
Disconnect in-vehicle upper sensor harness connector.
Do approximately 5 volts exist between in-vehicle upper sensor harness connector terminal No. (32) and (60)?

N.G. → Disconnect auto amp. harness connector.

B

Check the circuit between auto amp. harness connector terminal No. (32) and (21) is not shorted.

Note

O.K. ↓

Replace auto amp.

O.K. ↓

CHECK IN-VEHICLE UPPER SENSOR.
(Refer to Electrical Components Inspection.)

N.G. → Replace in-vehicle upper sensor.

O.K. ↓

Replace auto amp.

Note:
If the result is N.G. after checking circuit continuity, repair harness or connector.

A In-vehicle lower sensor harness connector (C5)

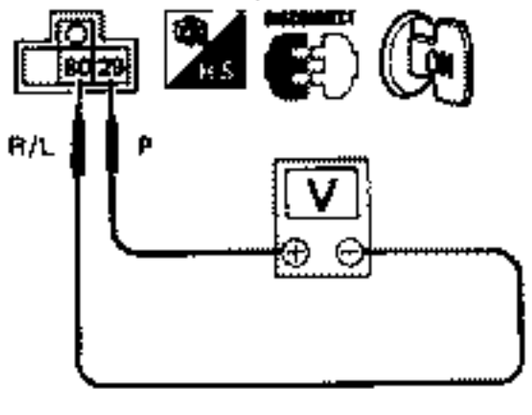

SHA383C

B Auto amp. harness connector (M1) In-vehicle lower sensor harness connector (C5)

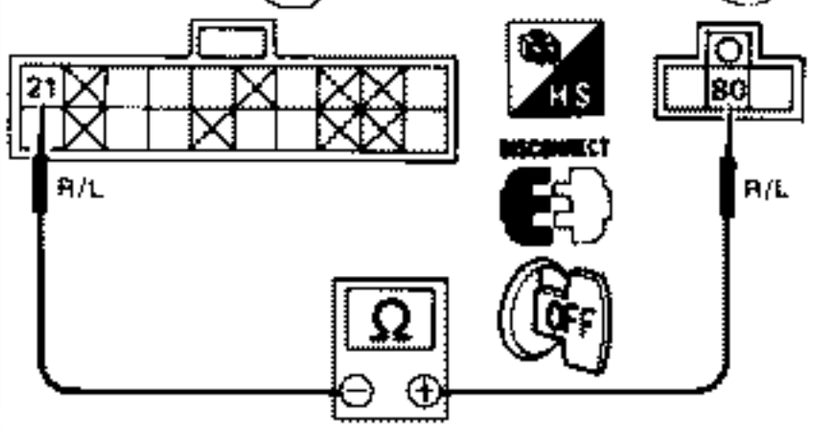

SHA384C

C Auto amp. harness connector (M1) In-vehicle lower sensor harness connector (C5)

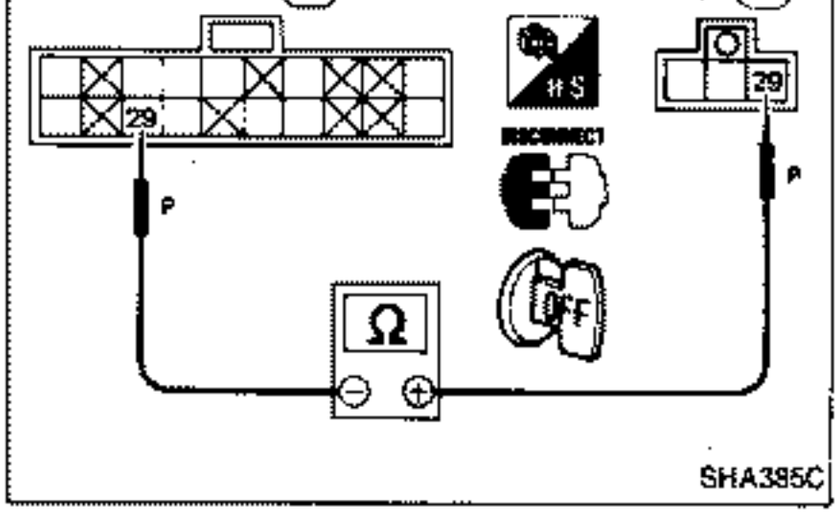

SHA385C

Diagnostic Procedure 6

SYMPTOM: Lower in-vehicle sensor circuit is open. (CONSULT or self-diagnosis STEP 4 indicates this.)

A

CHECK IN-VEHICLE LOWER SENSOR CIRCUIT BETWEEN IN-VEHICLE LOWER SENSOR AND AUTO AMP.
Disconnect in-vehicle lower sensor harness connector.
Do approximately 5 volts exist between in-vehicle lower sensor harness connector terminal No. (29) and (80)?

N.G. → Disconnect auto amp. harness connector.

C Note

Check circuit continuity between in-vehicle lower sensor harness connector terminal No. (29) and auto amp. harness connector terminal No. (29).

O.K. →

Replace auto amp.

O.K. →

Disconnect auto amp. harness connector.

B Note

Check circuit continuity between in-vehicle lower sensor harness connector terminal No. (80) and auto amp. harness connector terminal No. (21).

O.K. →

CHECK IN-VEHICLE LOWER SENSOR.
(Refer to Electrical Components Inspection.)

N.G. → Replace in-vehicle lower sensor.

O.K. →

Replace auto amp.

Note:
If the result is N.G. after checking circuit continuity, repair harness or connector.

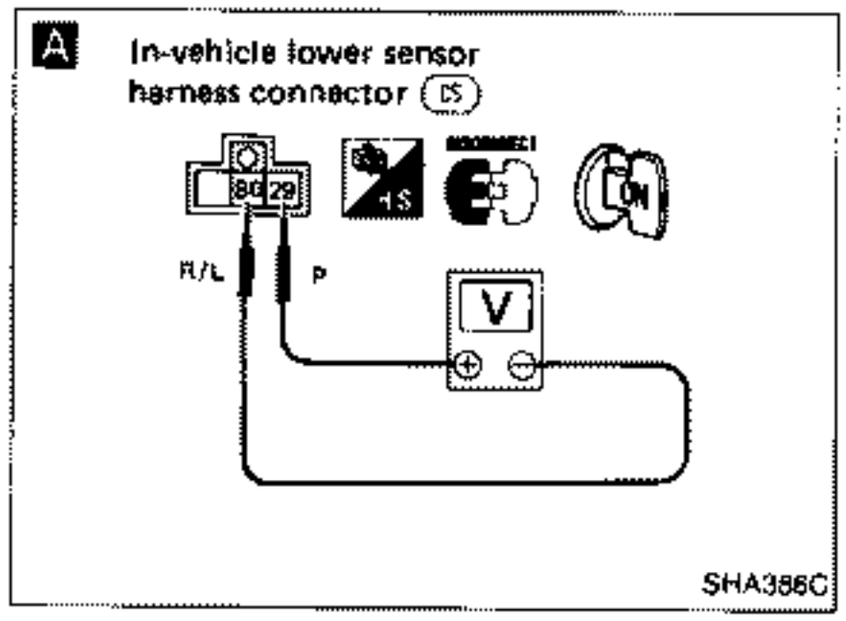

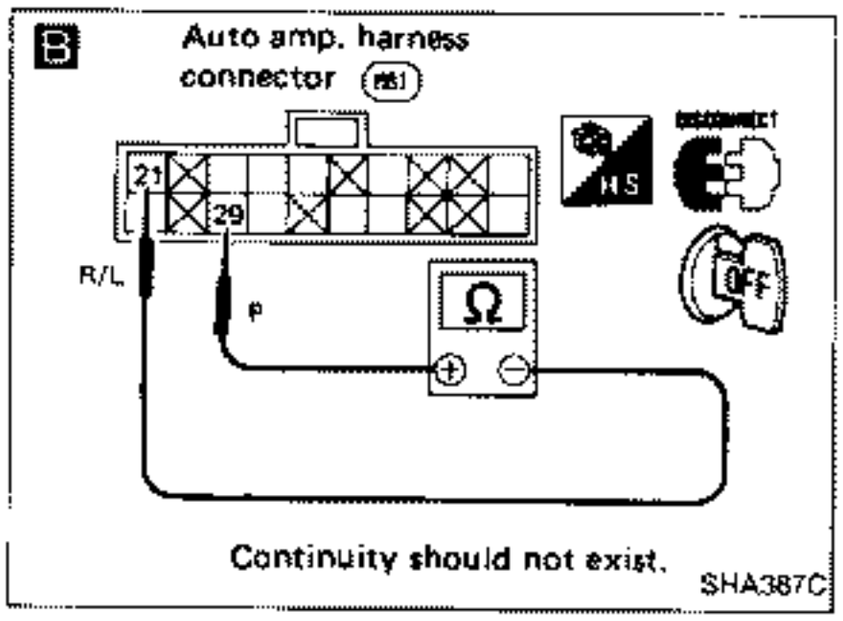

Diagnostic Procedure 7

SYMPTOM: Lower in-vehicle sensor circuit is shorted. (CONSULT or self-diagnosis STEP 4 indicates this.)

A

CHECK IN-VEHICLE LOWER SENSOR CIRCUIT BETWEEN IN-VEHICLE LOWER SENSOR AND AUTO AMP.
Disconnect in-vehicle lower sensor harness connector.
Do approximately 5 volts exist between in-vehicle lower sensor harness connector terminal No. (29) and (30)?

N.G. → Disconnect auto amp. harness connector.

B

Check the circuit between auto amp. harness connector terminal No. (29) and (21) is not shorted.

Note

O.K. ↓

Replace auto amp.

O.K. ↓

CHECK IN-VEHICLE UPPER SENSOR.
(Refer to Electrical Components Inspection.)

N.G. → Replace in-vehicle lower sensor.

O.K. ↓

Replace auto amp.

Note:
If the result is N.G. after checking circuit continuity, repair harness or connector.

A

Def. duct sensor harness connector (M8)

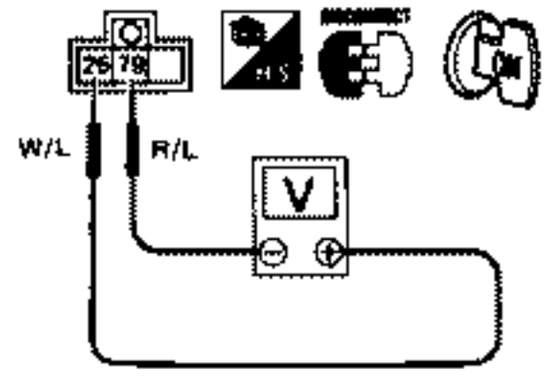

SHA388C

B

Auto amp. harness connector (M1)

Def. duct sensor harness connector (M8)

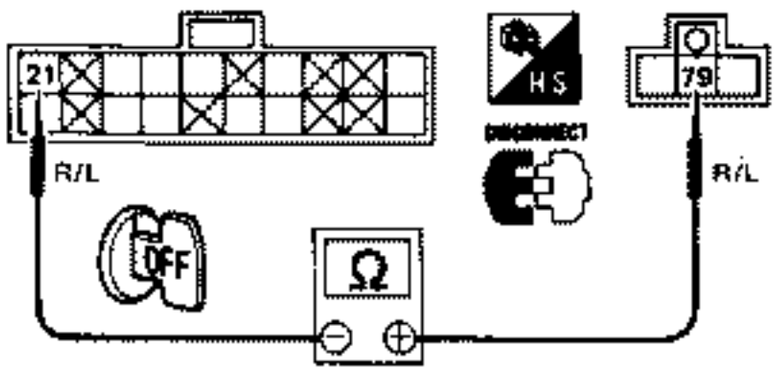

SHA389C

C

Auto amp. harness connector (M1)

Def. duct sensor harness connector (M8)

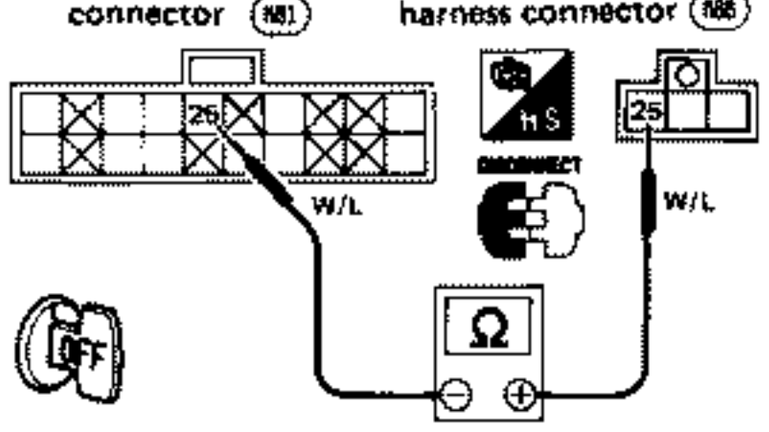

SHA390C

Diagnostic Procedure 8

SYMPTOM: Def. duct sensor circuit is open. (CONSULT or self-diagnosis STEP 4 indicates this.)

A

CHECK DEF. DUCT SENSOR CIRCUIT BETWEEN DEF. DUCT SENSOR AND AUTO AMP.
Disconnect def. duct sensor harness connector.
Do approximately 5 volts exist between def. duct sensor harness connector terminal No. (25) and (79)?

N.G. → Disconnect auto amp. harness connector.

C

Note

Check circuit continuity between def. duct sensor harness connector terminal No. (25) and auto amp. harness terminal No. (25).

O.K. ↓

Replace auto amp.

O.K. ↓

Disconnect auto amp. harness connector.

B

Note

Check circuit continuity between def. duct sensor harness connector terminal No. (79) and auto amp. harness connector terminal No. (21).

O.K. ↓

CHECK DEF. DUCT SENSOR. (Refer to Electrical Components Inspection.)

N.G. → Replace def. duct sensor.

O.K. ↓

Replace auto amp.

Note:
If the result is N.G. after checking circuit continuity, repair harness or connector.

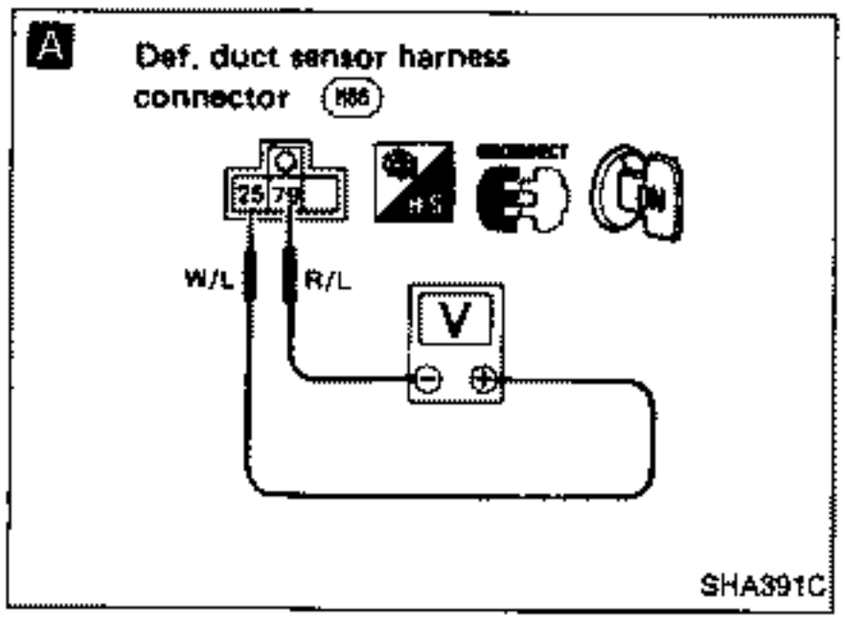

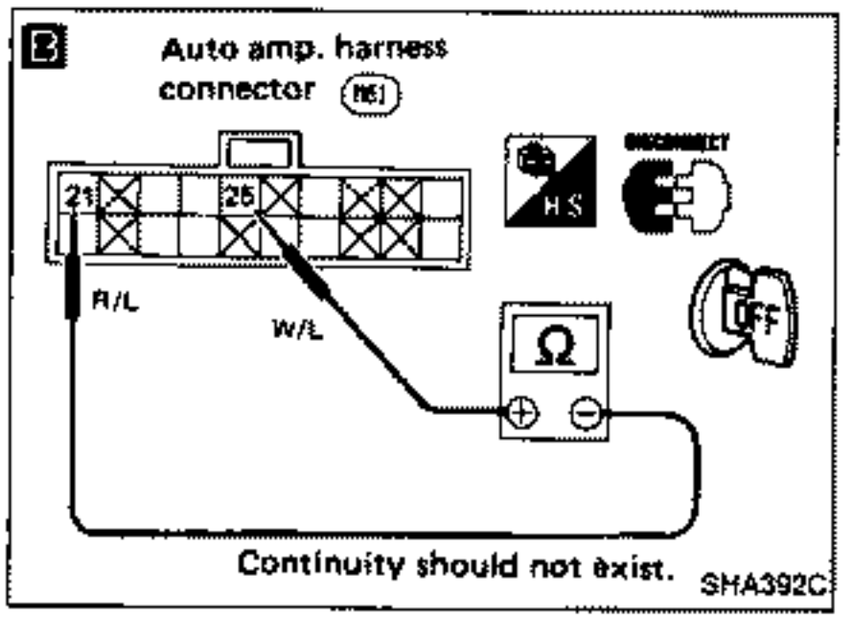

Diagnostic Procedure 9

SYMPTOM: Def. duct sensor circuit is shorted. (CONSULT or self-diagnosis STEP 4 indicates this.)

A

CHECK DEF. DUCT SENSOR CIRCUIT BETWEEN DEF. DUCT SENSOR AND AUTO AMP.
Disconnect def. duct sensor harness connector.
Do approximately 5 volts exist between def. duct sensor harness connector terminal No. (25) and (79)?

N.G. → Disconnect auto amp. harness connector.

B

Check the circuit between auto amp. harness connector terminal No. (25) and (21) is not shorted. (Note)

O.K. → Replace auto amp.

O.K. ↓

CHECK DEF. DUCT SENSOR. (Refer to Electrical Components Inspection.)

N.G. → Replace def. duct sensor.

O.K. ↓

Replace auto amp.

Note:
If the result is N.G. after checking circuit continuity, repair harness or connector.

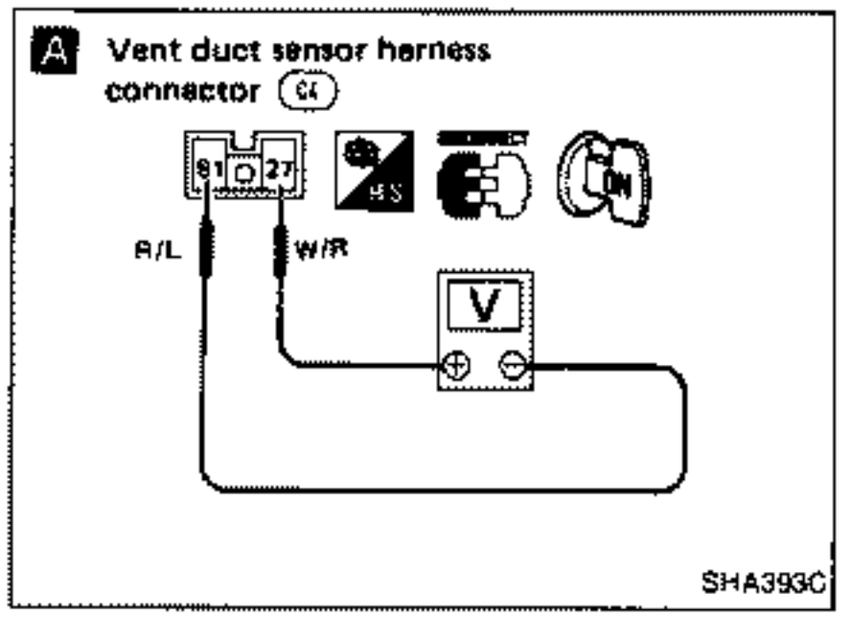

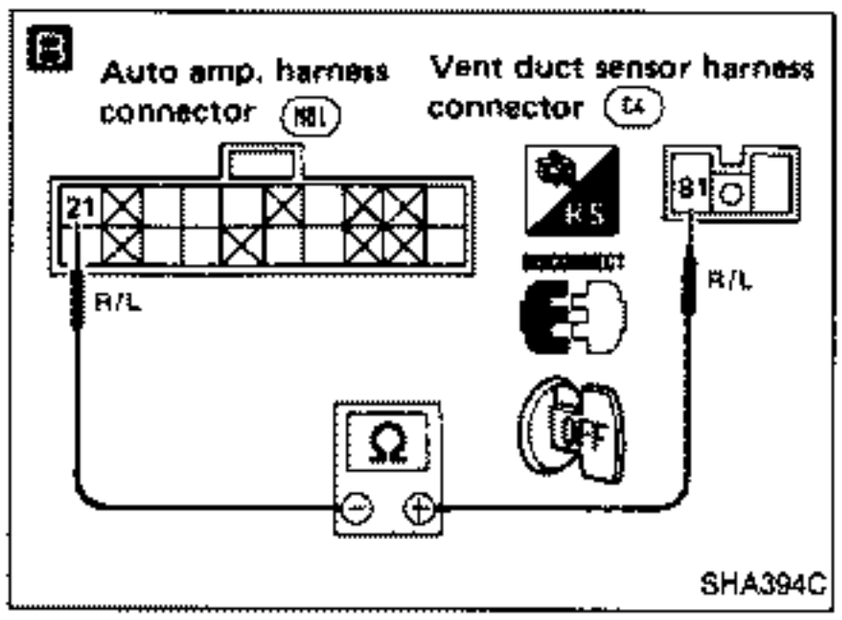

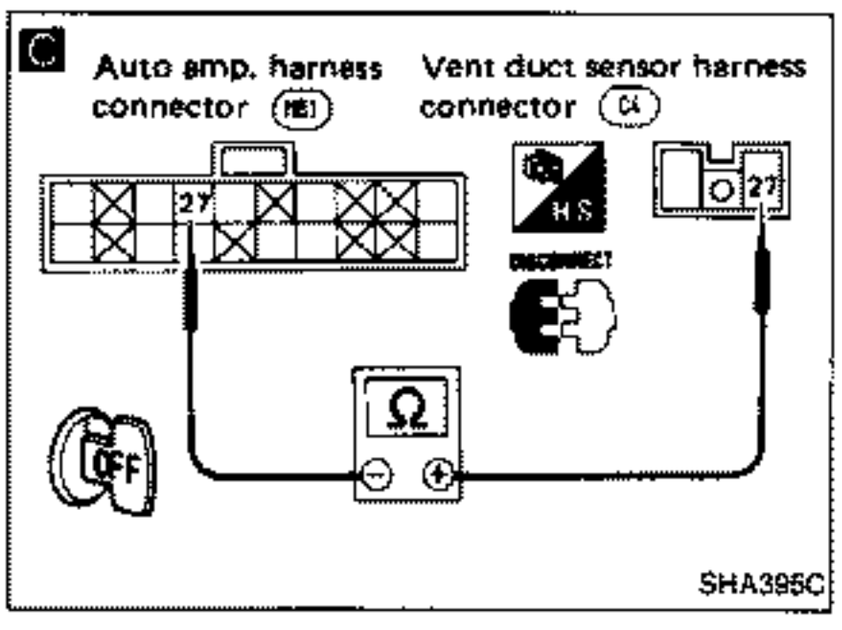

Diagnostic Procedure 10

SYMPTOM: Vent duct sensor circuit is open. (CONSULT or self-diagnosis STEP 4 indicates this.)

A

CHECK VENT DUCT SENSOR CIRCUIT BETWEEN VENT DUCT SENSOR AND AUTO AMP.
Disconnect vent duct sensor harness connector.
Do approximately 5 volts exist between vent duct sensor harness connector terminal No. (27) and (81)?

N.G. → Disconnect auto amp. harness connector.

C — Note

Check circuit continuity between vent duct sensor harness connector terminal No. (27) and auto amp. harness connector terminal No. (27).

O.K. → Replace auto amp.

O.K. → Disconnect auto amp. harness connector.

B — Note

Check circuit continuity between vent duct sensor harness connector terminal No. (81) and auto amp. harness connector terminal No. (21).

O.K. → CHECK VENT DUCT SENSOR. (Refer to Electrical Components Inspection.)

N.G. → Replace def. duct sensor.

O.K. → Replace auto amp.

Note:
If the result is N.G. after checking circuit continuity, repair harness or connector.

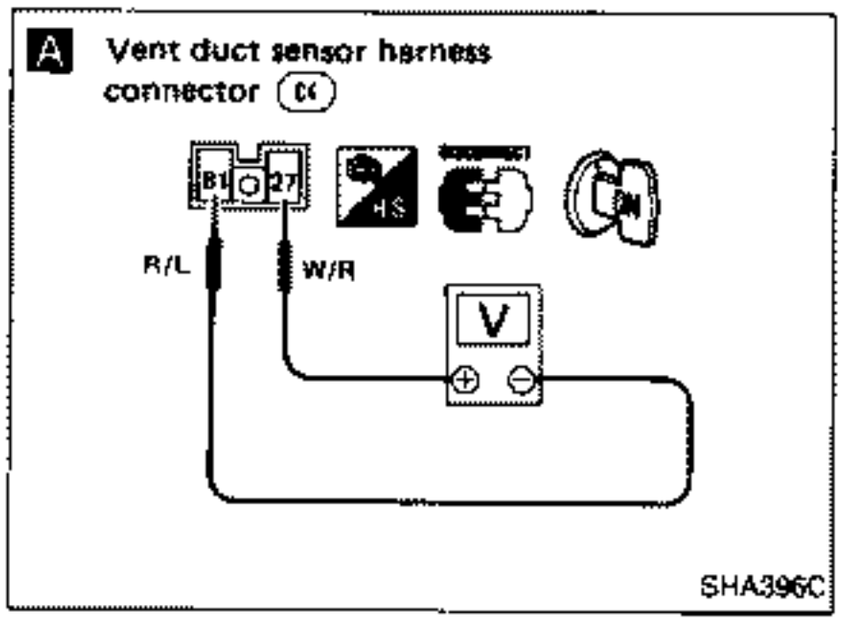

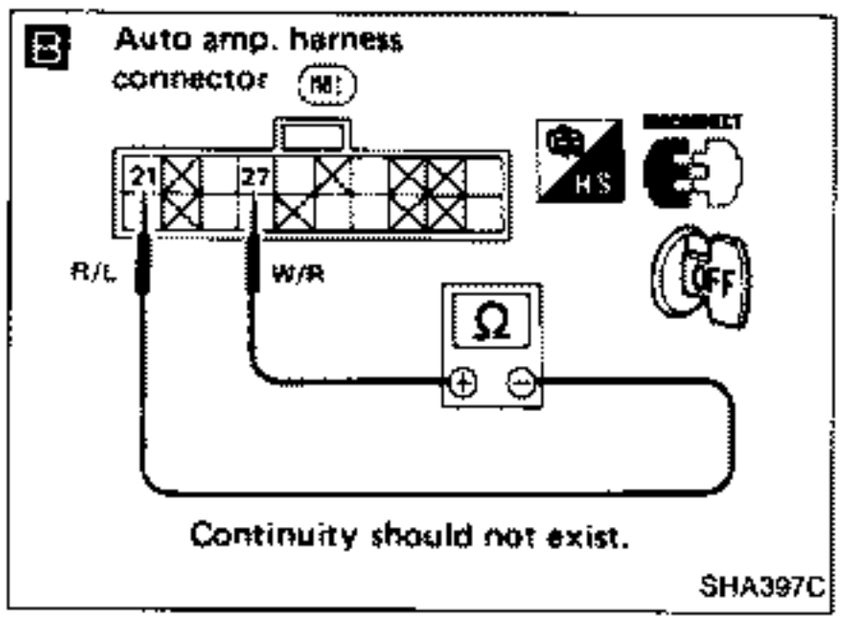

Diagnostic Procedure 11

SYMPTOM: Vent duct sensor circuit is shorted. (CONSULT or self-diagnosis STEP 4 indicates this.)

A

CHECK VENT DUCT SENSOR CIRCUIT BETWEEN VENT DUCT SENSOR AND AUTO AMP.
Disconnect vent duct sensor harness connector.
Do approximately 5 volts exist between vent duct sensor harness connector terminal No. ㉗ and ㉑?

N.G. → Disconnect auto amp. harness connector.

B

Check the circuit between auto amp. harness connector terminal No. ㉗ and ㉑ is not shorted. (Note)

O.K. → Replace auto amp.

O.K. ↓

CHECK VENT DUCT SENSOR. (Refer to Electrical Components Inspection.)

N.G. → Replace vent duct sensor.

O.K. ↓

Replace auto amp.

Note:
If the result is N.G. after checking circuit continuity, repair harness or connector.

A Foot duct sensor harness connector (25)

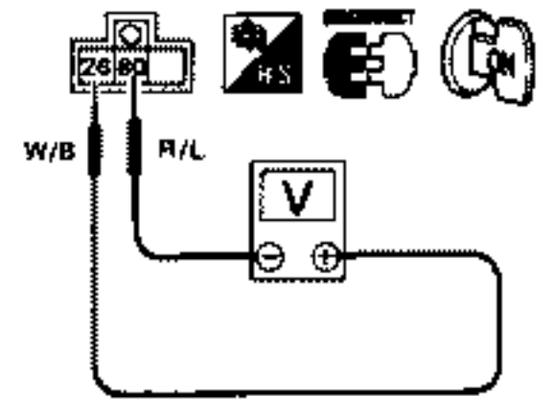

B Auto amp. harness connector (M81) Foot duct sensor harness connector (25)

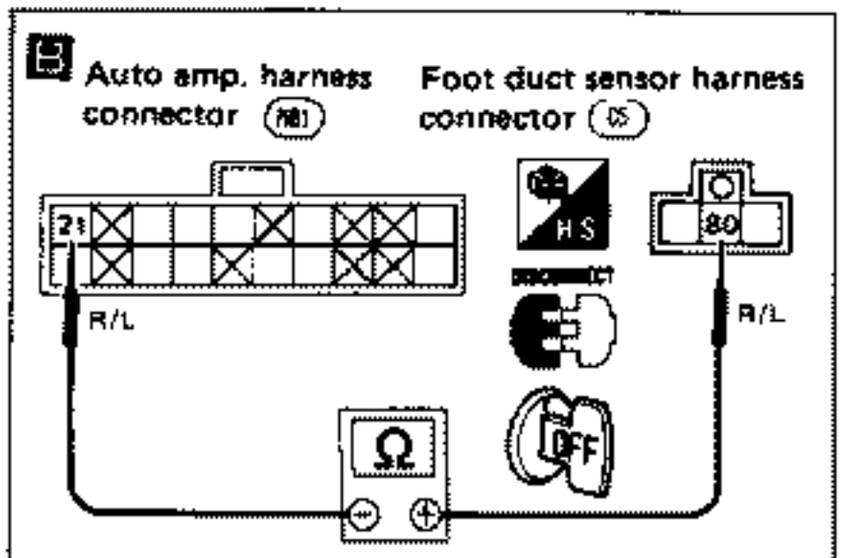

C Auto amp. harness connector (M81) Foot duct sensor harness connector (25)

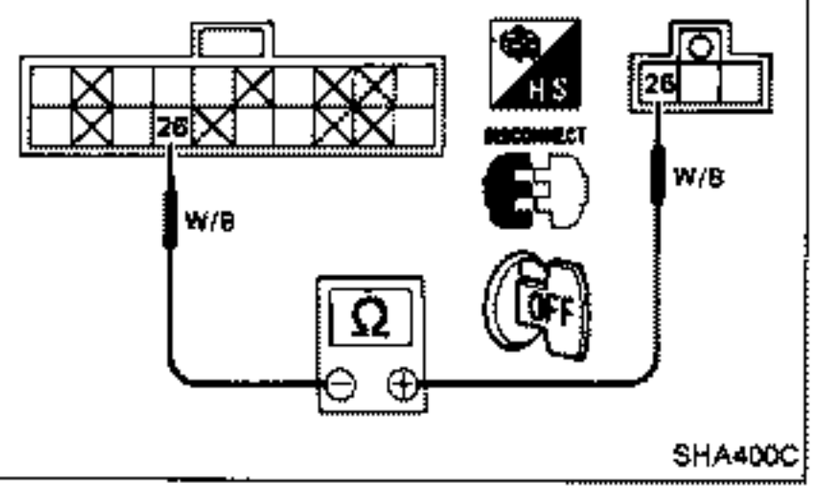

Diagnostic Procedure 12

SYMPTOM: Floor duct sensor circuit is open. (CONSULT or self-diagnosis STEP 4 indicates this.)

A

CHECK FOOT DUCT SENSOR CIRCUIT BETWEEN FOOT DUCT SENSOR AND AUTO AMP.
Disconnect foot duct sensor harness connector.
Do approximately 5 volts exist between foot duct sensor harness connector terminal No. (26) and (80)?

N.G. → Disconnect auto amp. harness connector.

C Note

Check circuit continuity between foot duct sensor harness connector terminal No. (26) and auto amp. harness connector terminal No. (26).

O.K. → Replace auto amp.

O.K.

Disconnect auto amp. harness connector.

B Note

Check circuit continuity between foot duct sensor harness connector terminal No. (80) and auto amp. harness connector terminal No. (21).

O.K.

CHECK FOOT DUCT SENSOR. (Refer to Electrical Components Inspection.)

N.G. → Replace foot duct sensor.

O.K.

Replace auto amp.

Note:
If the result is N.G. after checking circuit continuity, repair harness or connector.

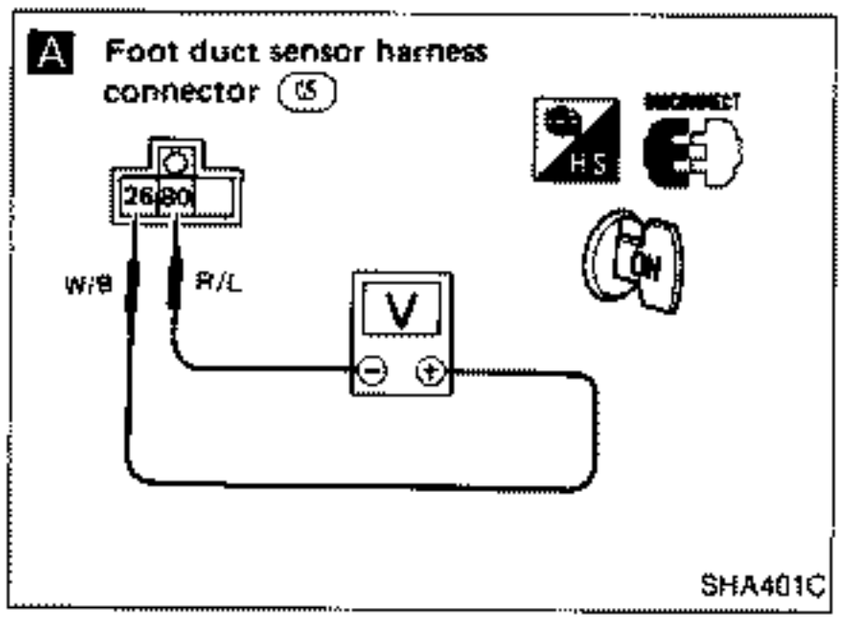

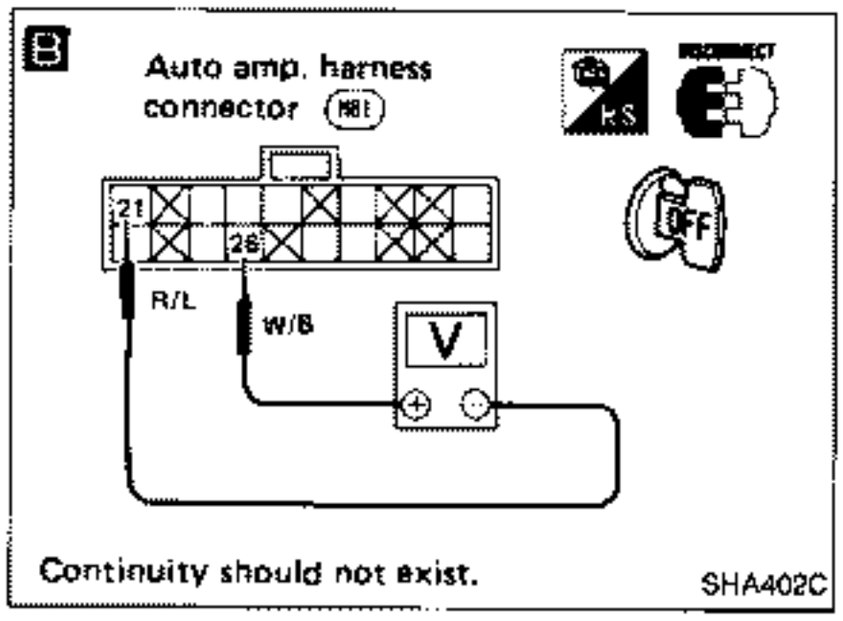

Diagnostic Procedure 13

SYMPTOM: Floor duct sensor circuit is shorted. (CONSULT or self-diagnosis STEP 4 indicates this.)

A

CHECK FOOT DUCT SENSOR CIRCUIT BETWEEN FOOT DUCT SENSOR AND AUTO AMP.
Disconnect foot duct sensor harness connector.
Do approximately 5 volts exist between foot duct sensor harness connector terminal No. (26) and (30)?

N.G. → Disconnect auto amp. harness connector.

B

Check the circuit between auto amp. harness connector terminal No. (26) and (21) is not shorted. (Note)

O.K. → Replace auto amp.

O.K. ↓

CHECK FOOT DUCT SENSOR. (Refer to Electrical Components Inspection.)

N.G. → Replace vent duct sensor.

O.K. ↓

Replace auto amp.

Note:
If the result is N.G. after checking circuit continuity, repair harness or connector.

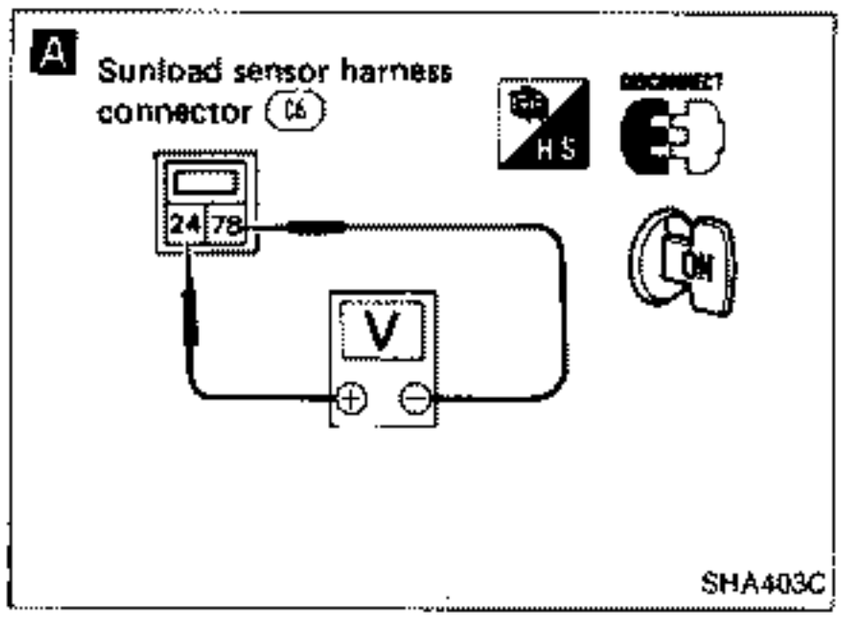

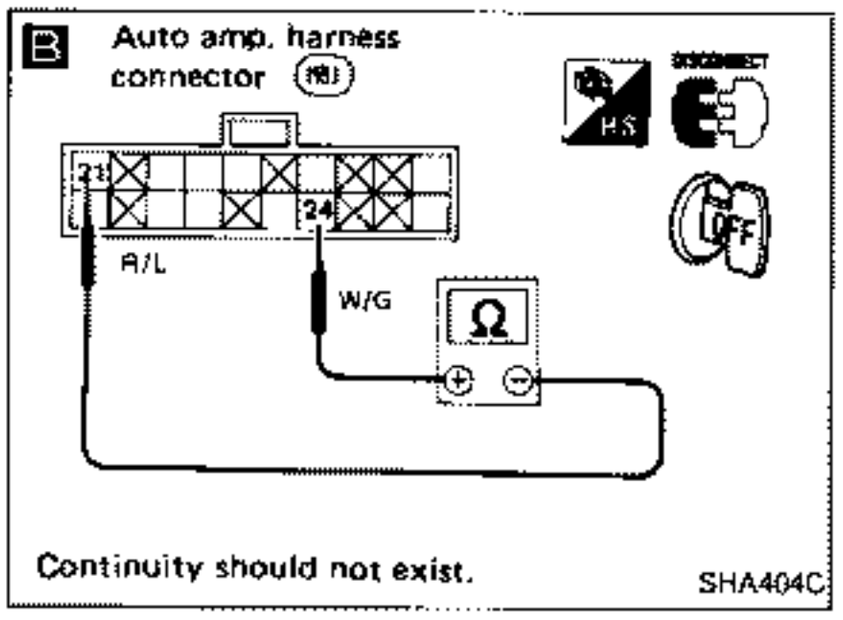

Diagnostic Procedure 14

SYMPTOM: Sunload sensor circuit is shorted. (CONSULT or self-diagnosis STEP 4 indicates this.)

A

CHECK SUNLOAD SENSOR CIRCUIT BETWEEN SUNLOAD SENSOR AND AUTO AMP.
Disconnect sunload sensor harness connector.
Do approximately 5 volts exist between sunload sensor harness connector terminal No. (24) and (78)?

N.G. → Disconnect auto amp. harness connector.

B

Check the circuit between auto amp. harness connector terminal No. (24) and (21) is not shorted. (Note)

O.K. ↓

Replace auto amp.

O.K. ↓

CHECK SUNLOAD SENSOR.
(Refer to Electrical Components Inspection.)

N.G. → Replace sunload sensor.

O.K. ↓

Replace auto amp.

Note:
If the result is N.G. after checking circuit continuity, repair harness or connector.

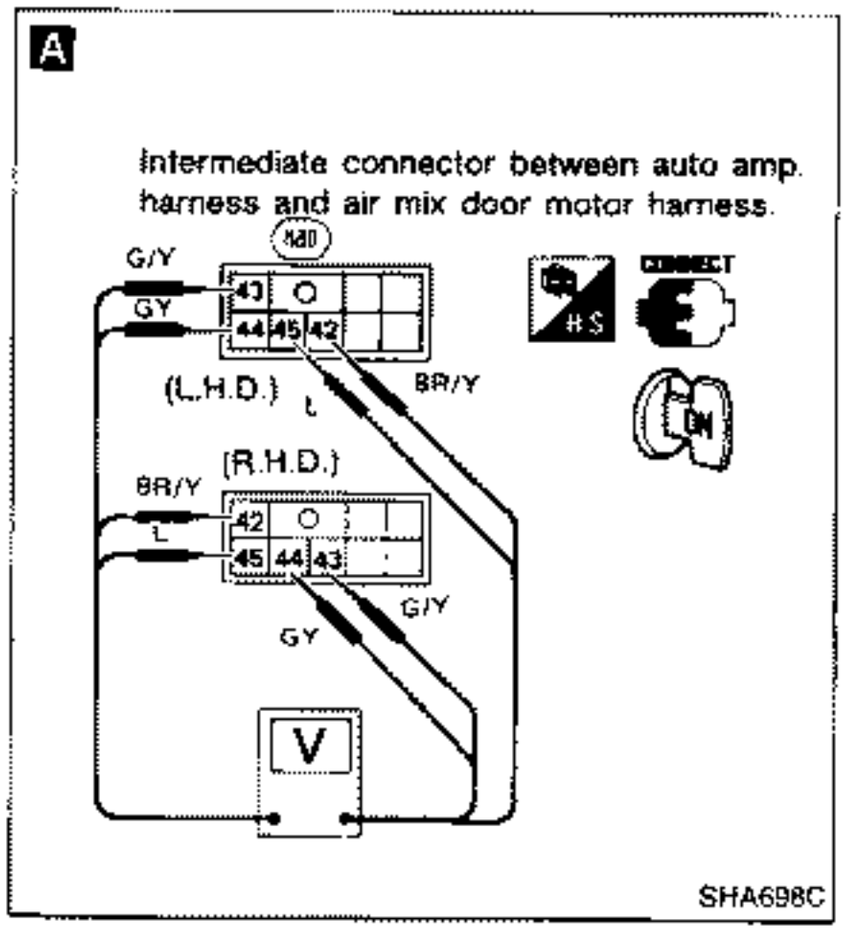

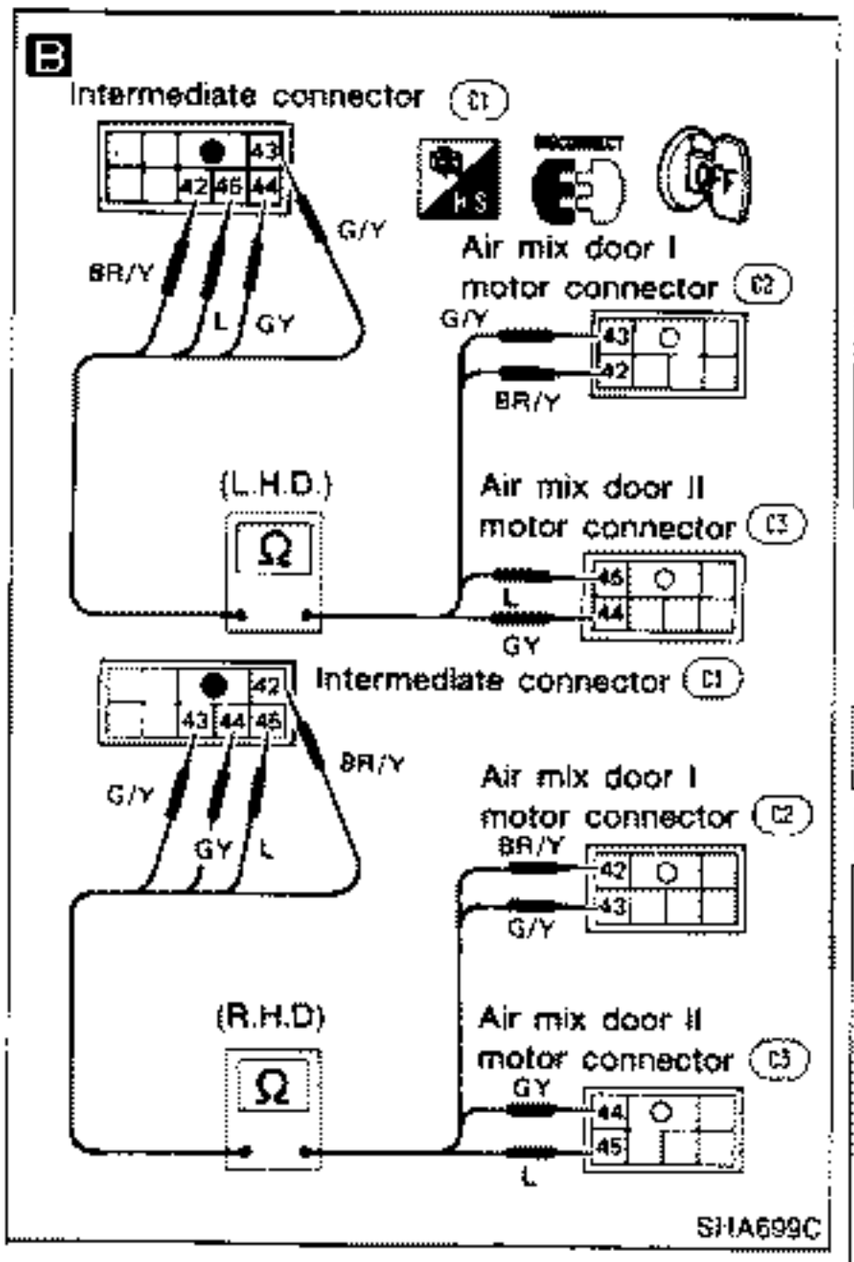

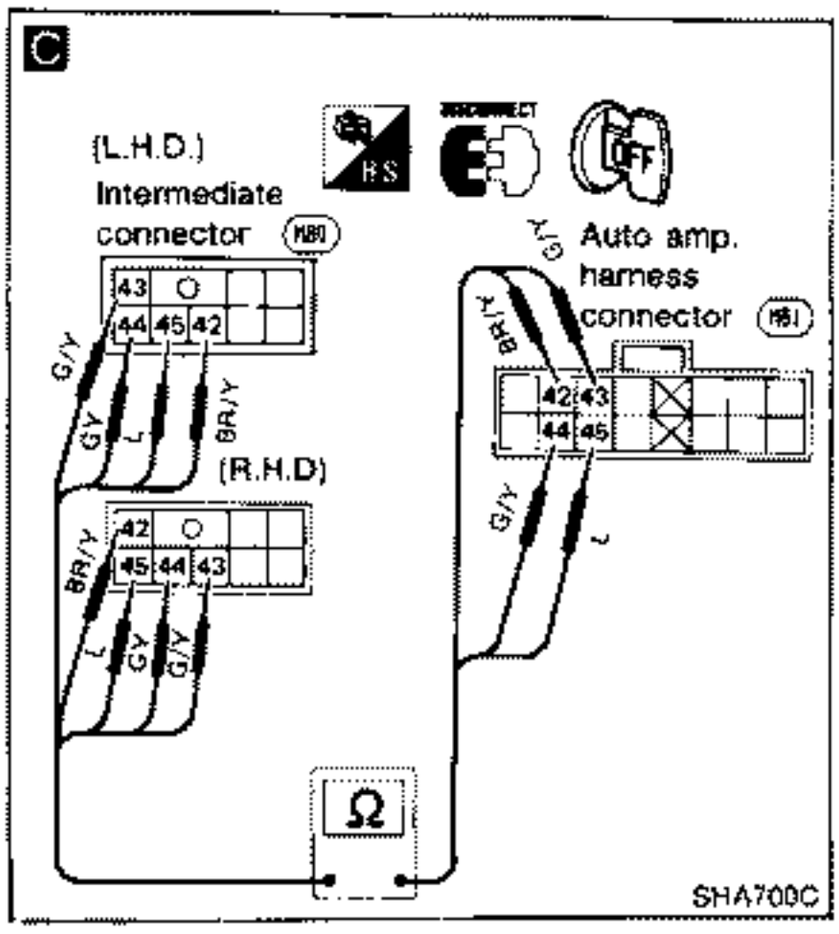

Diagnostic Procedure 15

SYMPTOM: Air mix door does not operate normally.

- **Read out self-diagnosis result with CONSULT or perform self-diagnosis STEP 4 before referring to the following flow chart.**
- **Remove combination meter assembly to make working space and reconnect air conditioner switch connector.**

A

CHECK FOR SIGNALS TO AIR MIX DOOR MOTOR.

Set up "ACTIVE TEST" mode with CONSULT.

Set up self-diagnosis STEP 2.

Set air mix door position as shown in the following chart. Check if approximately 10V exists for 3 seconds every 10 seconds between each terminal.*

Air mix door position	Code No.	Terminal No. Air mix door I ⊕	Air mix door I ⊖	Air mix door II ⊕	Air mix door II ⊖
Full-Hot	3X	42	42	45	44
Full-Cool	6X	42	43	44	45

N.G. → **C**

Check circuit continuity between auto amp. harness connector terminals and intermediate connector terminals.

Intermediate connector	Auto amp. connector	Continuity
42	42	Yes
43	43	Yes
44	44	Yes
45	45	Yes

O.K. → Replace auto amp.

N.G. → Repair harness or connector.

O.K.

*: After two minutes power supply is automatically cut off.

↓

Remove heater unit assembly.

↓

B

Check continuity between intermediate connector terminal and each air mix door motor harness connector terminal.

Intermediate connector	Air mix door I motor connector	Continuity
42	42	Yes
43	43	Yes

Intermediate connector	Air mix door II motor connector	Continuity
44	44	Yes
45	45	Yes

O.K. → Repair harness or connector.

↓

Replace air mix door motor.

A

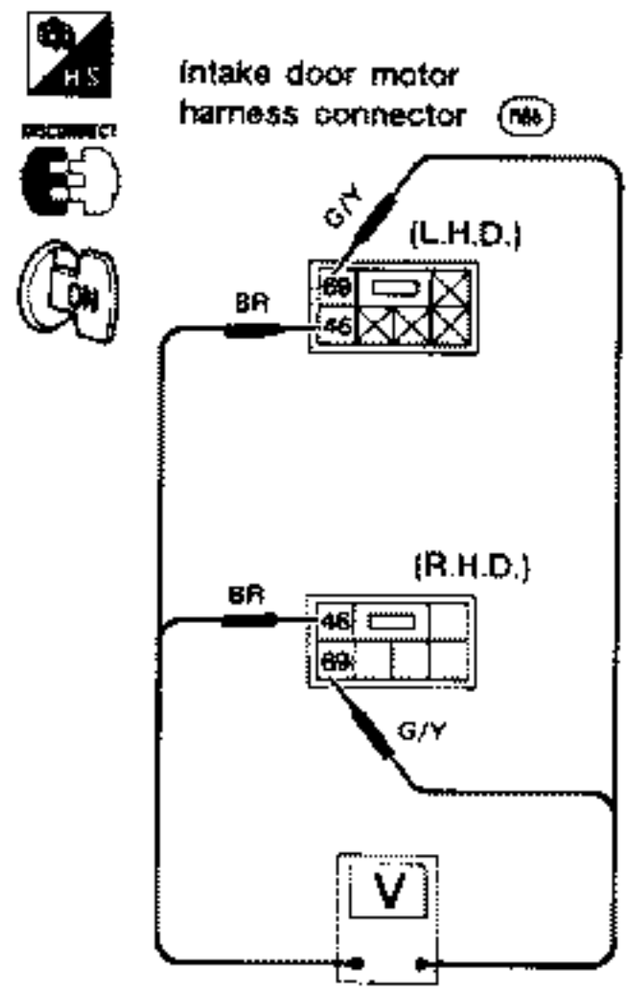

SHA701C

B

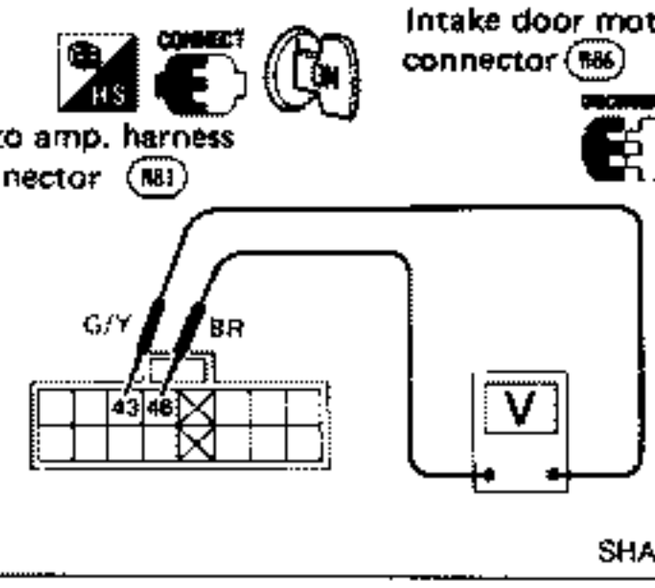

SHA409C

C

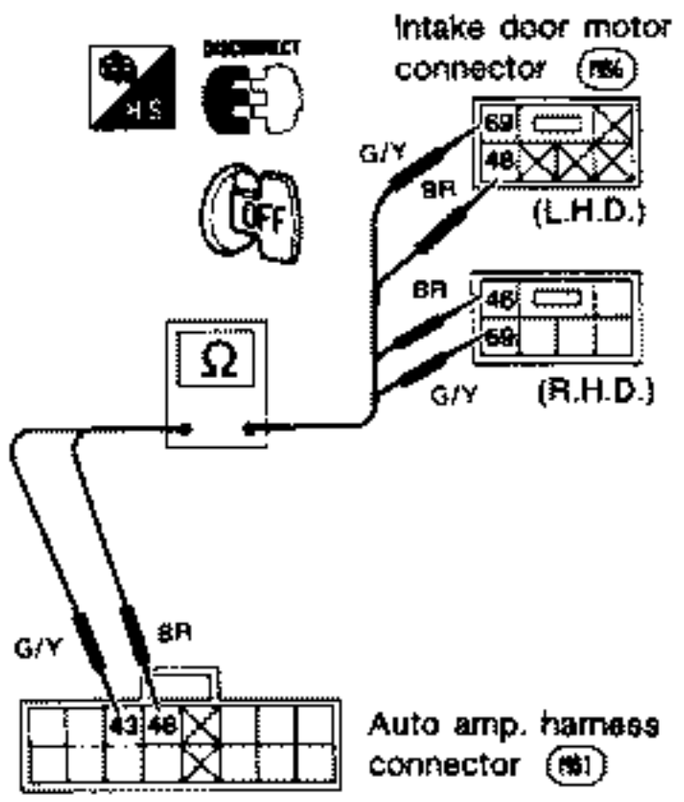

SHA702C

Diagnostic Procedure 16

SYMPTOM: Intake door does not operate normally.

- **Read out self-diagnosis result with CONSULT or perform self-diagnosis STEP 4 before referring to the following flow chart.**

A

CHECK FOR SIGNALS TO INTAKE DOOR MOTOR.
Disconnect intake door motor harness connector.
Set up "ACTIVE TEST" mode with CONSULT.
Set up self-diagnosis STEP 2.
Set intake door position as shown in the following chart.
Check if approximately 10V exists for 2.5 seconds between each terminal.

Intake door position	Code No.	Terminal No. ⊕	Terminal No. ⊖
5X → 6X	FRE/REC → REC	46	69
6X → 3X	REC → FRE	69	46

N.G. → B

O.K. ↓

Replace intake door motor.

B

CHECK OUTPUT OF AUTO AMP.
Set up "ACTIVE TEST" mode with CONSULT.
Set up self-diagnosis STEP 2.
Set intake door position as shown in the following chart.
Check if approximately 10V exists for 2.5 seconds between each terminal.

Intake door position	Code No.	Terminal No. ⊕	Terminal No. ⊖
5X → 6X	FRE/REC → REC	46	43
6X → 3X	REC → FRE	43	46

O.K. ↓

C

Check continuity between auto amp. harness connector terminal No. 46 and intake door motor harness connector terminal No. 46.
Check auto amp. harness connector terminal No. 43 and intake door motor harness connector terminal No. 69.

N.G. ↓

Repair harness or connector.

N.G. ↓

Replace auto amp.

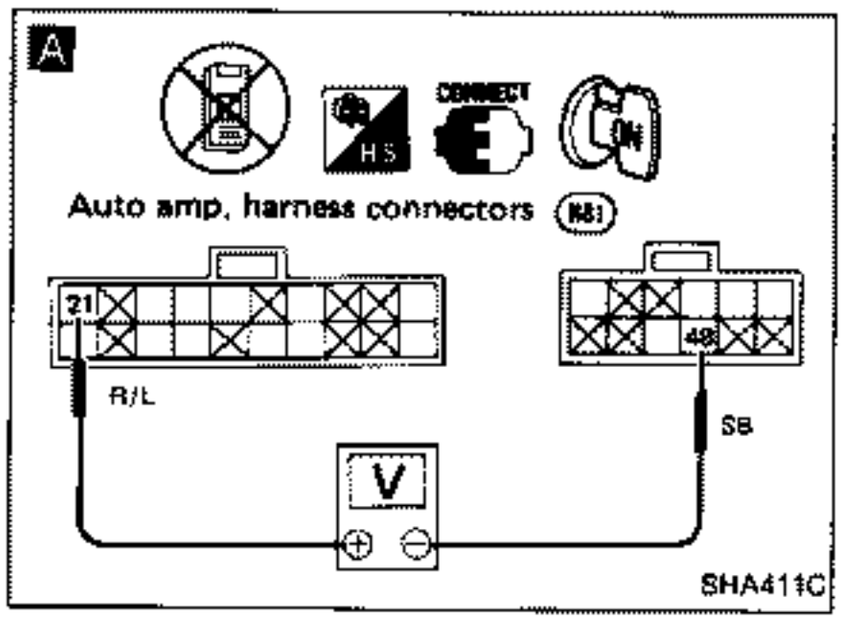

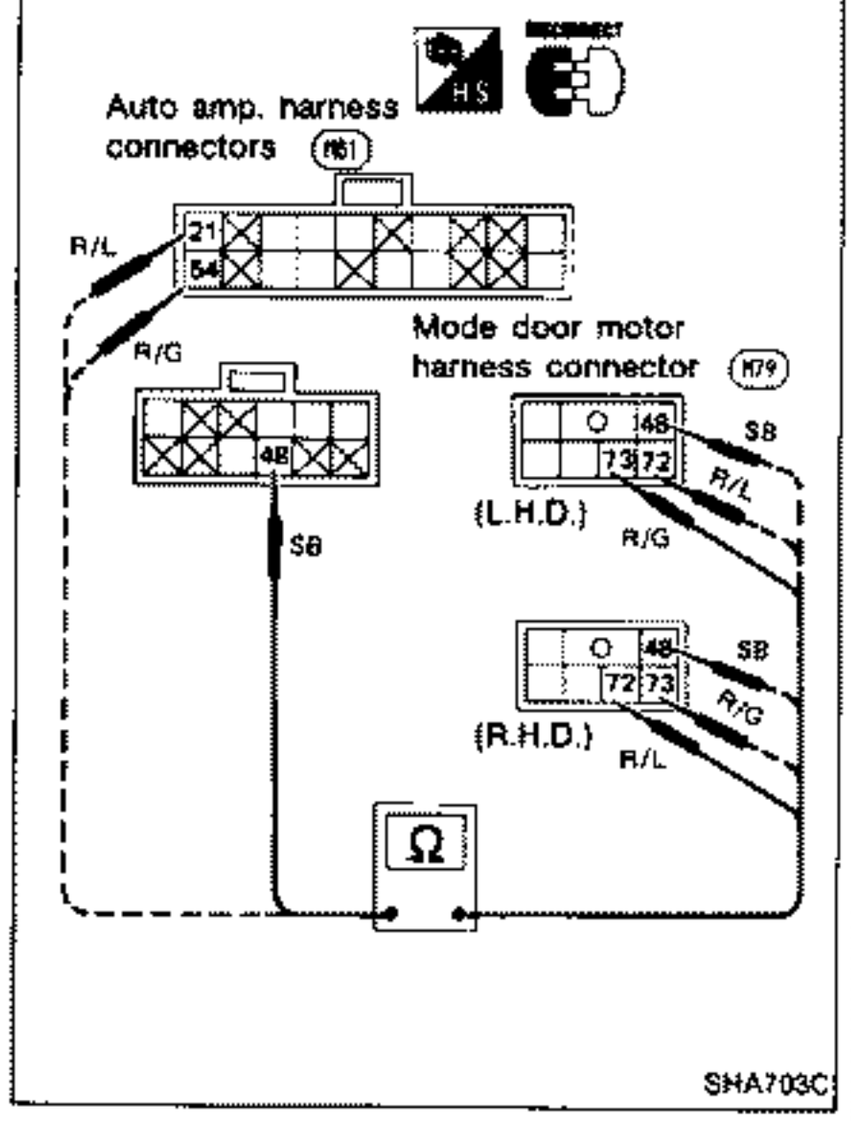

Diagnostic Procedure 17

SYMPTOM: Mode door does not operate normally.

- **Read out self-diagnosis result with CONSULT or perform self-diagnosis STEP 4 before referring to the following flow chart.**

A

CHECK P.B.R. CIRCUIT

Set up "ACTIVE TEST" mode with CONSULT.

Set up self-diagnosis STEP 2.

Set mode door motor as shown in the following chart.

Check P.B.R. voltage with data monitor function in "ACTIVE TEST" mode.

Mode door position	P.B.R. voltage (approx.)
DEF	4.8V
FOOT/DEF	2.5V
B/L	1.1V
VENT	0V

Check if voltage between auto amp. harness connector terminals (48) and (21) varies from approximately 5V to approximately 0V according to mode door position varies.

Code No.	Voltage (48) ⊖	Voltage (21) ⊕
3X	4.8V	
4X	2.5V	
5X	1.1V	
6X	0V	

N.G. → CHECK MODE DOOR MOTOR. Refer to Electrical Components Inspection.

O.K. → B

N.G. → Replace mode door motor.

B

CHECK HARNESS BETWEEN AUTO AMP. AND MODE DOOR MOTOR.

Auto amp. harness connector terminal	Mode door motor harness connector terminal	Continuity
(21)	(48)	No
	(72)	Yes
	(73)	No
(48)	(48)	Yes
	(72)	No
	(73)	No
(54)	(48)	No
	(72)	No
	(73)	Yes

O.K. → A

N.G. → Repair harness or connector.

A O.K. → Go to diagnostic procedure 18.

A

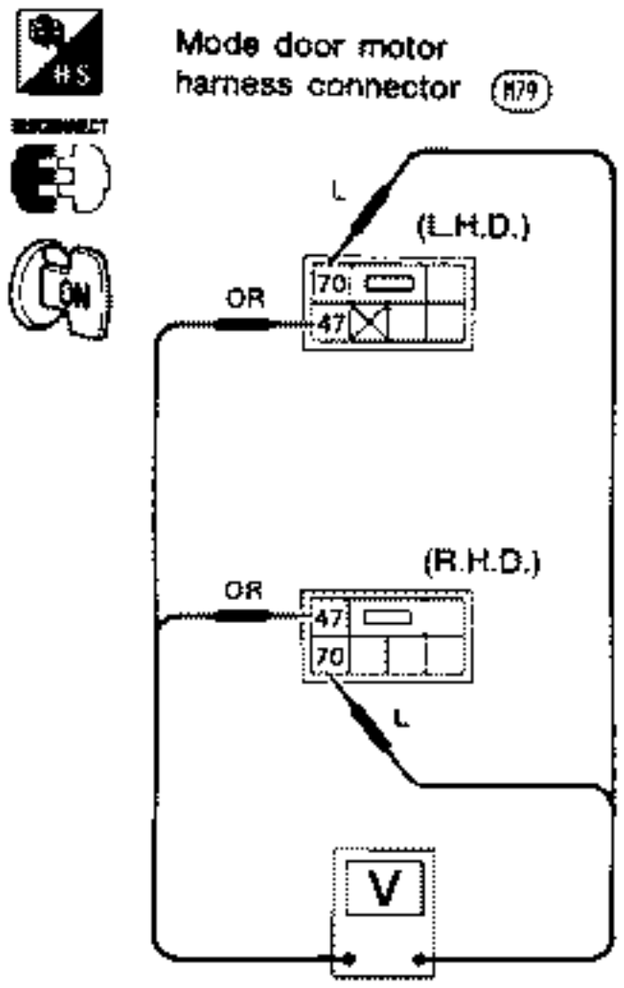

SHA704C

B

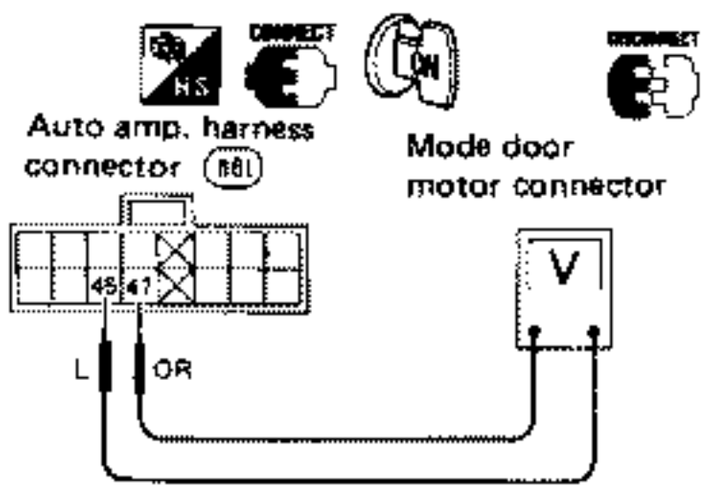

SHA414C

C

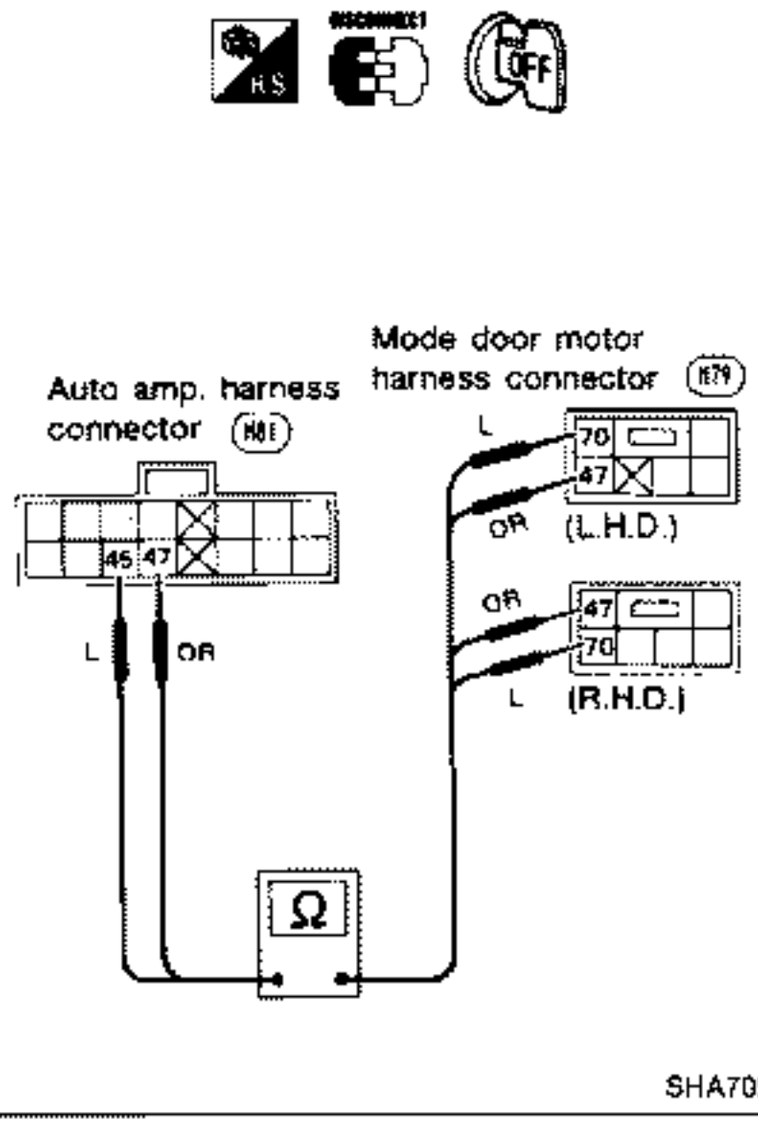

SHA705C

Diagnostic Procedure 18

SYMPTOM: Mode door does not move at all.

- **Read out self-diagnosis result with CONSULT or perform self-diagnosis STEP 4 before referring to the following flow chart.**

A

CHECK FOR SIGNALS TO MODE DOOR MOTOR.

Set up "ACTIVE TEST" mode with CONSULT.

Set up self-diagnosis STEP 2.

Set mode door position as shown in the following chart.

Check if approximately 10V exists between mode door motor harness connector terminals (47) and (70) for approximately 1.3 seconds every 10 seconds.

Mode door position	Code No.	Terminal No. ⊕	Terminal No. ⊖
DEF	3X	(70)	(47)
VENT	6X	(47)	(70)

N.G. →

B

CHECK OUTPUT OF AUTO AMP.

Set up "ACTIVE TEST" mode with CONSULT.

Set up self-diagnosis STEP 2.

Set mode door position as shown in the following chart.

Check if approximately 10V exists between mode door motor harness connector terminals (47) and (45) for approximately 1.3 seconds every 10 seconds.

Mode door position	Code No.	Terminal No. ⊕	Terminal No. ⊖
DEF	3X	(45)	(47)
VENT	6X	(47)	(45)

O.K. ↓

Replace mode door motor.

N.G. ↓

Replace auto amp.

C

Check continuity between auto amp. harness connector terminal No. (47), (45) and mode door motor harness connector terminal No. (47), (70) respectively.

O.K. ↓

INSPECTION END

N.G. ↓

Repair harness or connector.

Diagnostic Procedure 19

SYMPTOM: Magnet clutch does not engage.

- **Perform Preliminary check 6 before referring to the following flow chart.**

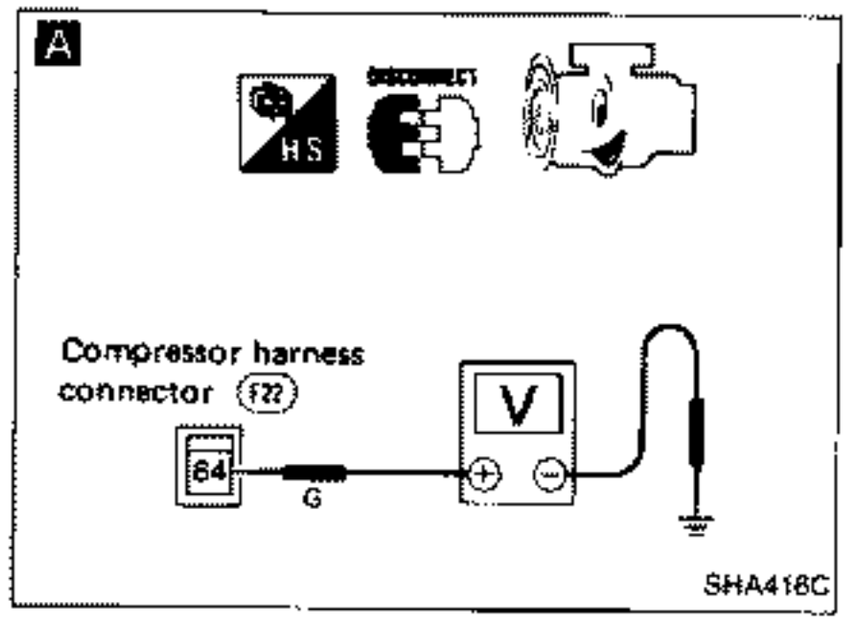

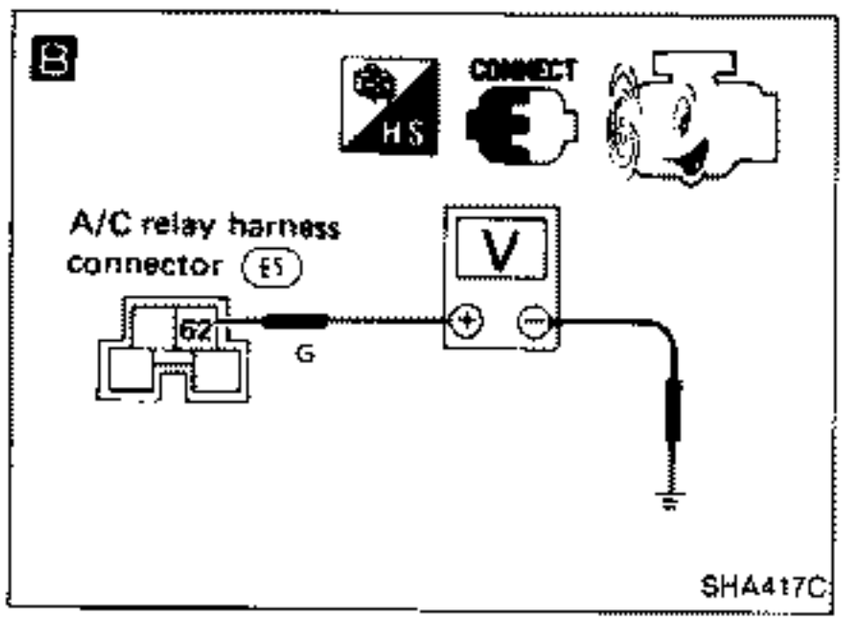

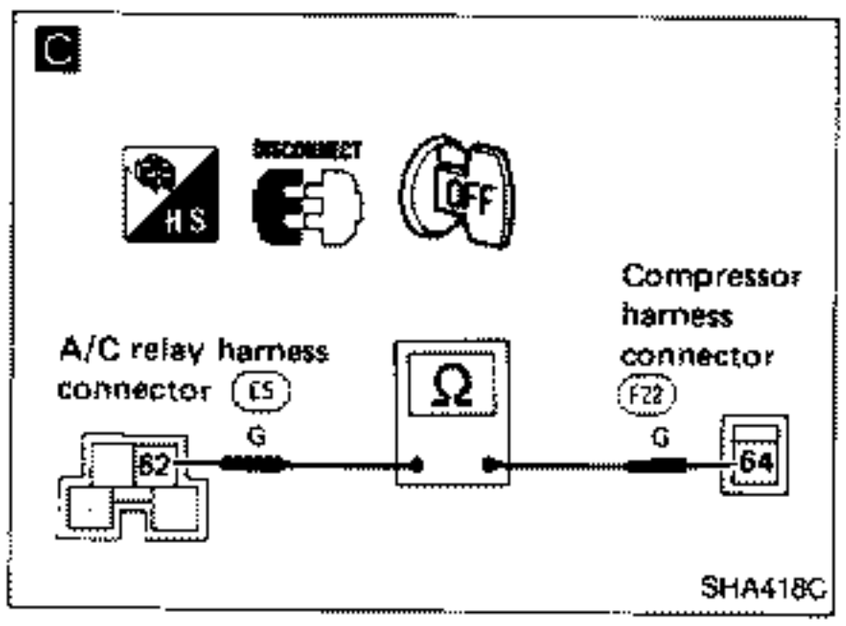

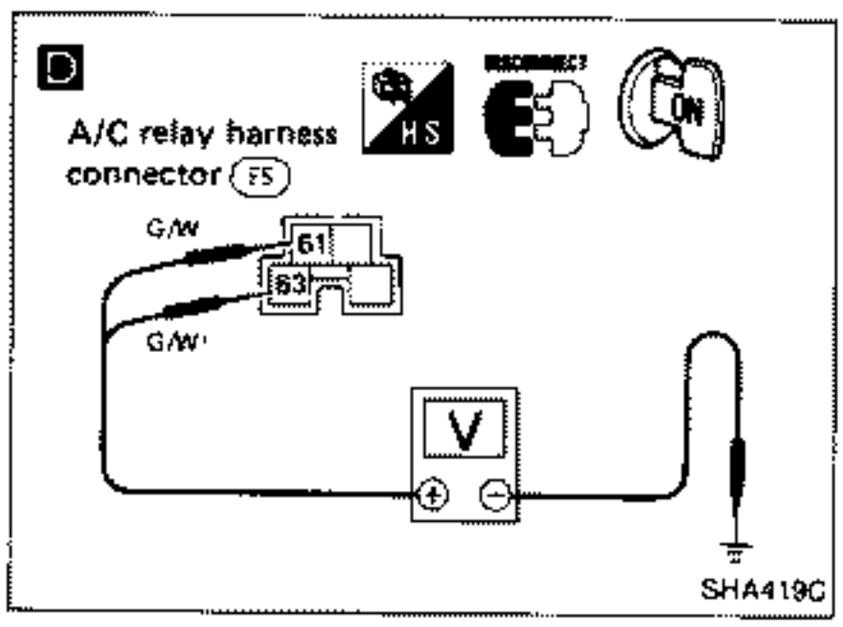

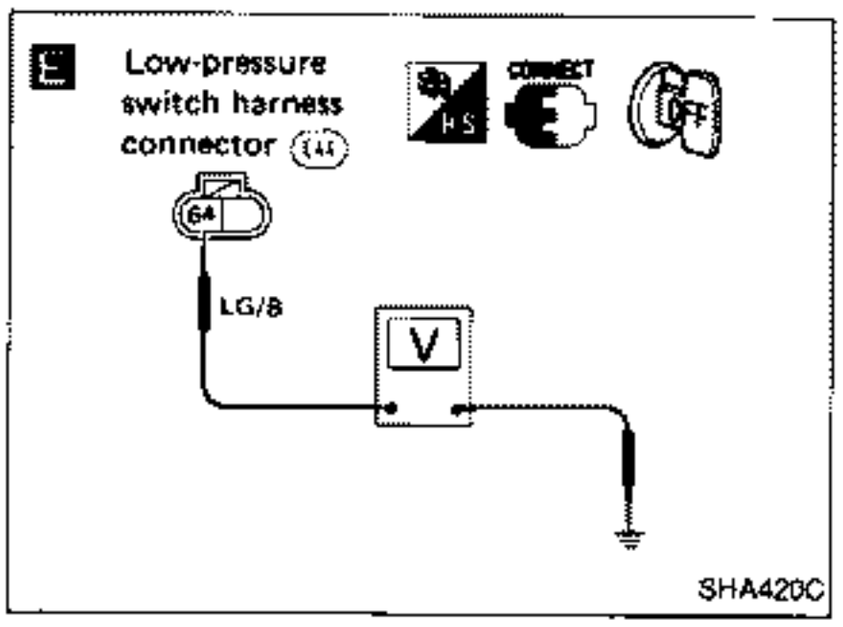

A

CHECK POWER SUPPLY FOR COMPRESSOR.
Disconnect compressor harness connector.
Set up "ACTIVE TEST" mode with CONSULT.
Set up self-diagnosis STEP 2.
Set compressor as shown in the following chart.
Check if approximately 12V exists between compressor harness connector terminal and body ground.

Compressor	Code No.	Terminal No.	
ON	6X	64	Body ground

N.G. → **B**

CHECK A/C RELAY OPERATION.
Do approximately 12 volts exist between A/C relay harness connector terminal No. 62 and body ground?

N.G. → Disconnect A/C relay harness connector.

C

Check circuit continuity between A/C relay harness connector terminal No. 62 and compressor harness connector terminal No. 64.

Note

O.K. → Check magnet clutch.

N.G. → Replace magnet clutch.
Refer to COMPRESSOR — Model MJS170 (HITACHI make).

O.K. → **D**

CHECK POWER SUPPLY FOR A/C RELAY.
Disconnect A/C relay.
Do approximately 12 volts exist between A/C relay harness connector terminal No. 61, 63 and body ground respectively?

N.G. → CHECK POWER SUPPLY CIRCUIT.
(Refer to "POWER SUPPLY ROUTING" in EL section and A/C ELECTRICAL CIRCUIT.)

O.K. → CHECK A/C RELAY AFTER DISCONNECTING IT.
(Refer to Electrical Components Inspection.)

N.G. → Replace A/C relay.

O.K. → Reconnect A/C relay.

Ⓐ

(Go to next page.)

Note:
If the result is N.G. after checking circuit continuity, repair harness or connector.

Diagnostic Procedure 19 (Cont'd)

F

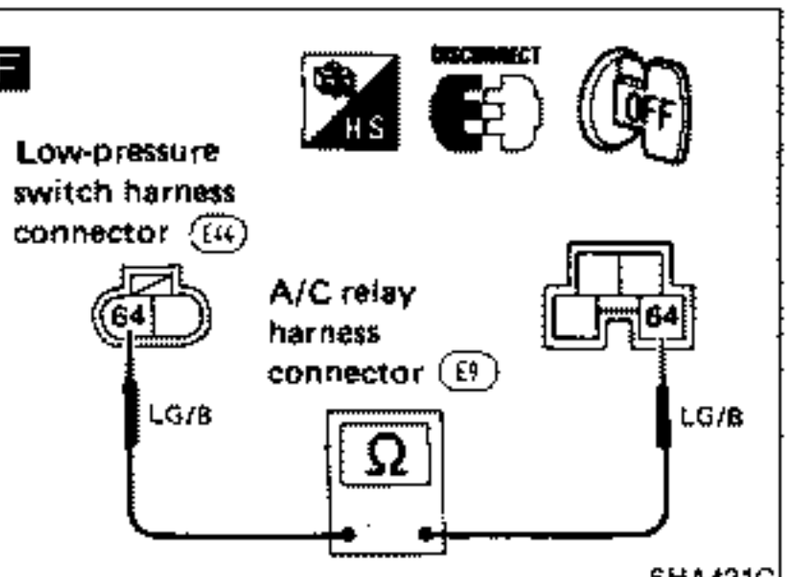

G

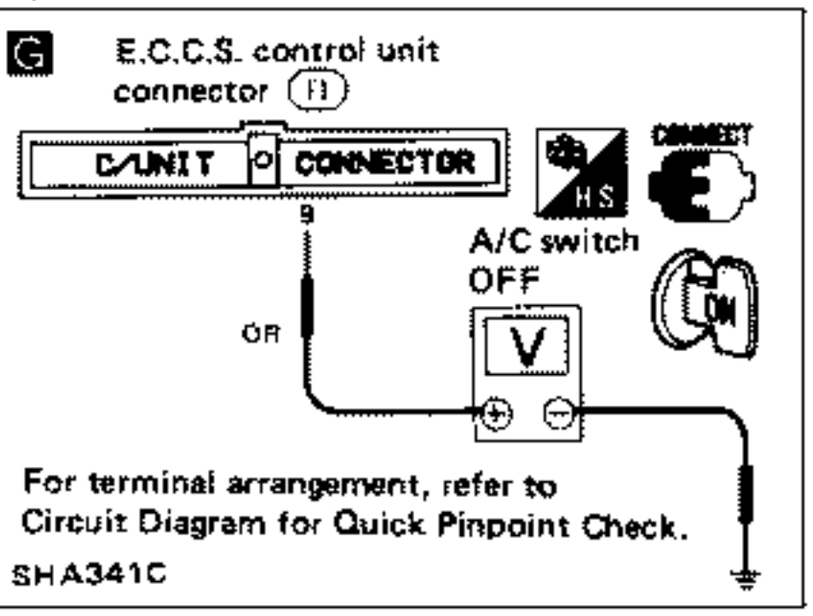

H

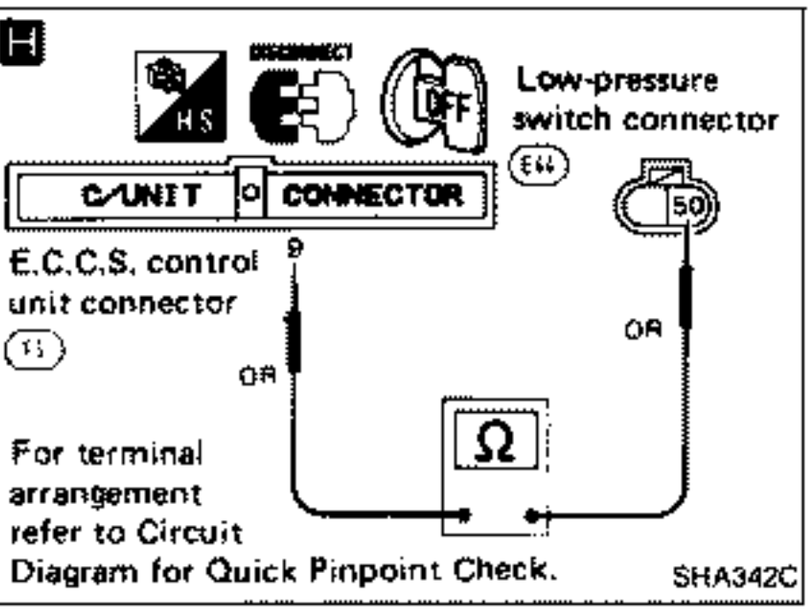

I

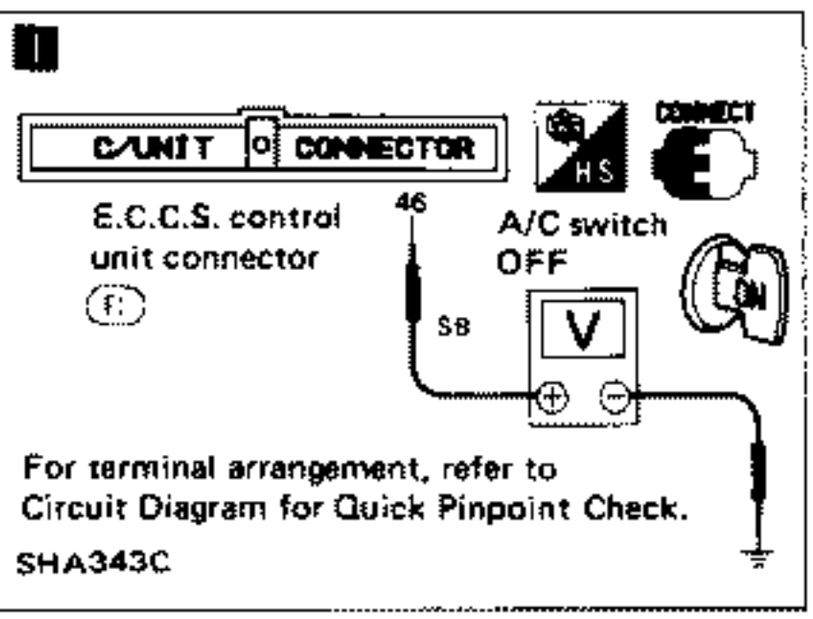

J

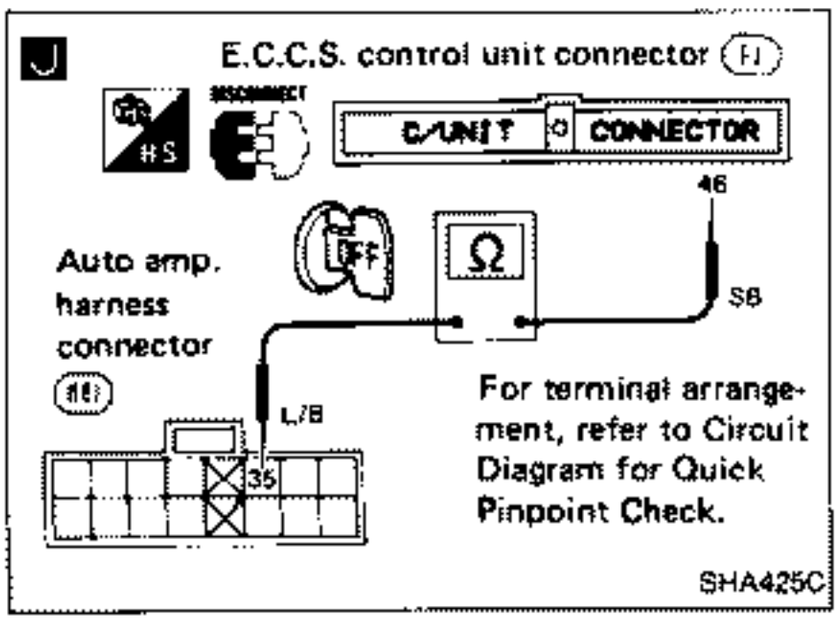

Ⓐ

Turn ignition switch ON and press (OFF) switch.

E

CHECK COIL SIDE CIRCUIT OF A/C RELAY.
Do approximately 12 volts exist between low-pressure switch harness connector terminal No. ⑭ and body ground?

N.G. → F

Check circuit continuity between A/C relay harness connector terminal No. ⑭ and low-pressure harness connector terminal No. ⑭.

Note

O.K. ↓

G

Do approximately 12 volts exist between E.C.C.S. control unit harness connector terminal No. ⑨ and body ground?

N.G. → H

Check circuit continuity between low-pressure switch harness connector terminal No. ⑨ and E.C.C.S. control unit harness connector terminal No. ⑨.

Note

O.K. ↓

CHECK LOW-PRESSURE SWITCH.
(Refer to Electrical Components Inspection.)

N.G. ↓

Replace low-pressure switch.

O.K. ↓

I

Do approximately 8 to 9 volts exist between E.C.C.S. control unit harness connector terminal No. ㊻ and body ground?

N.G. → CHECK E.C.C.S. CONTROL UNIT.
(Refer to EF & EC section.)

O.K. ↓

Disconnect auto amp. harness connector.

O.K. ↓

J

Check circuit continuity between auto amp. harness connector terminal No. ㉟ and E.C.C.S. control unit harness connector terminal No. ㊻.

O.K. ↓

Replace auto amp.

Note:
If the result is N.G. after checking circuit continuity, repair harness or connector.

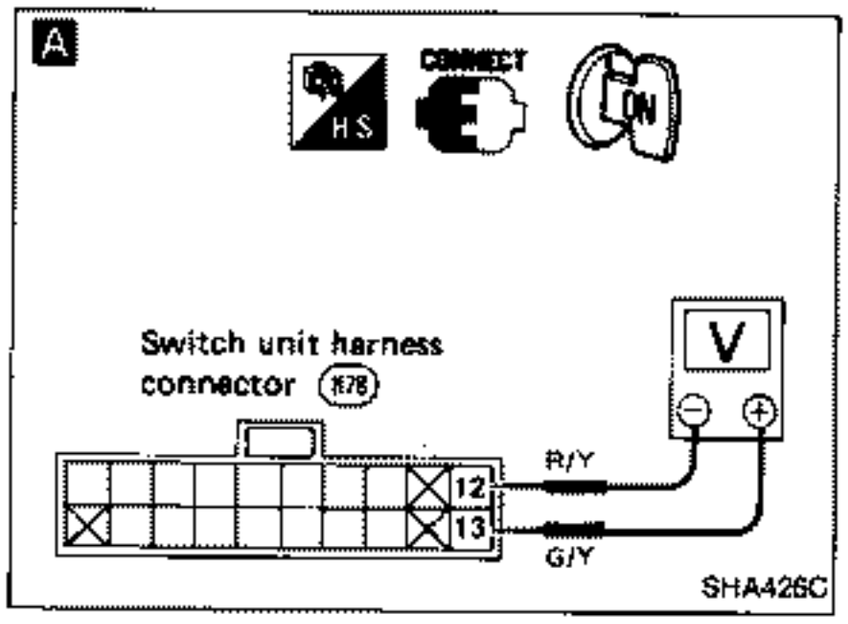

Diagnostic Procedure 20

SYMPTOM: Air conditioner control switch panel illumination does not come on.

A

Turn on light switch.
Set illumination control switch at the brightest position.
Check if approximately 12V exists between switch panel harness connector terminal No. (12) and (13).

N.G. → Check illumination control system. Refer to section EL.

O.K. ↓

Replace bulb.

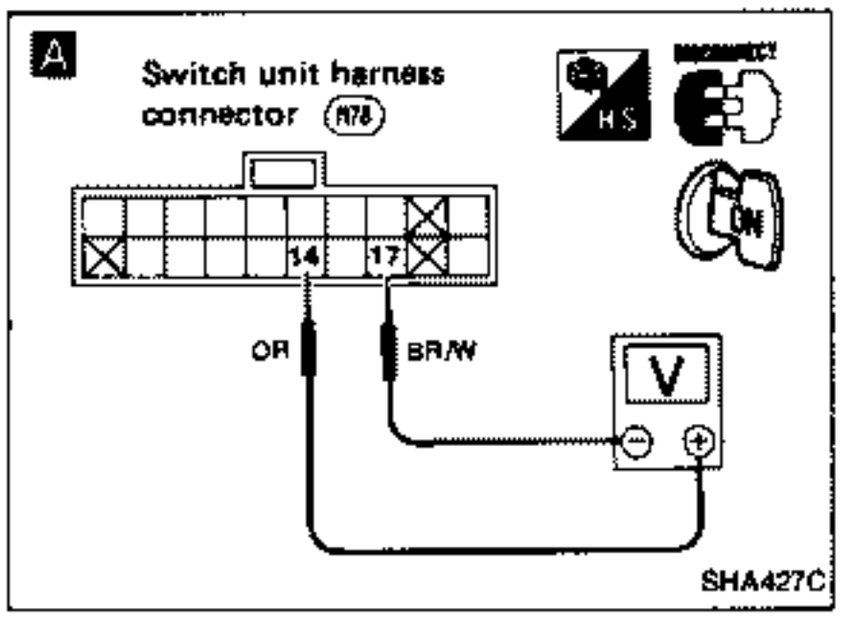

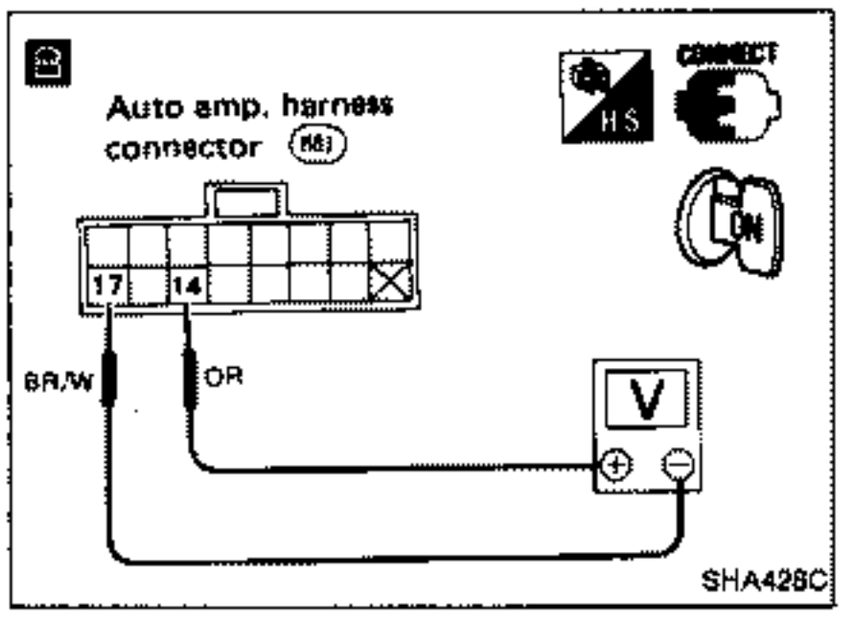

Diagnostic Procedure 21

SYMPTOM: Set temperature and ambient temperature do not appear on display window.

A

Check if approximately 0.5 to 2V exist between switch unit harness connector terminals No. ⑭ and ⑰.

N.G. → **B**

Check if approximately 0.5 to 2V exist between auto amp. harness connector terminals ⑭ and ⑰.

O.K. → Repair harness or connector (terminal No. ⑭, ⑰).

N.G. → Replace auto amp.

O.K. → Replace switch unit.

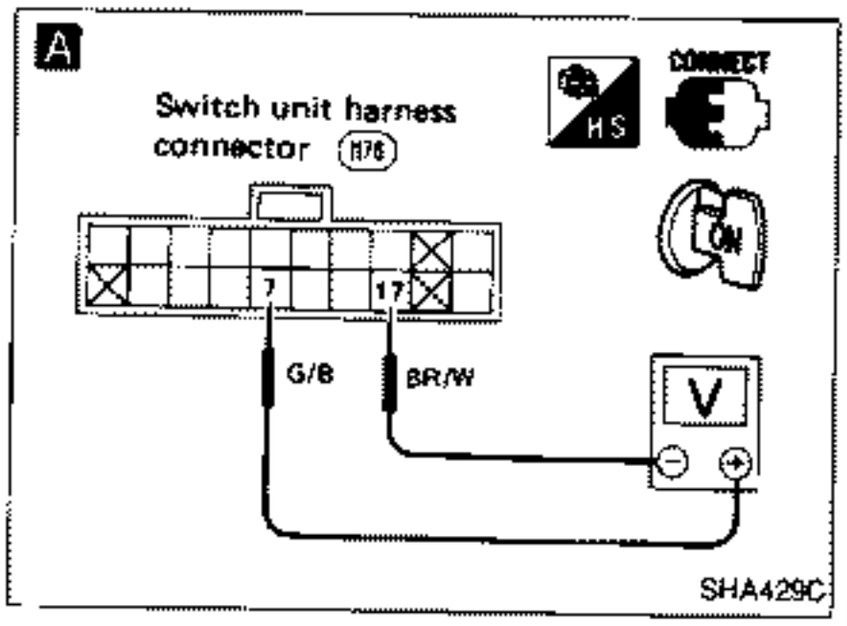

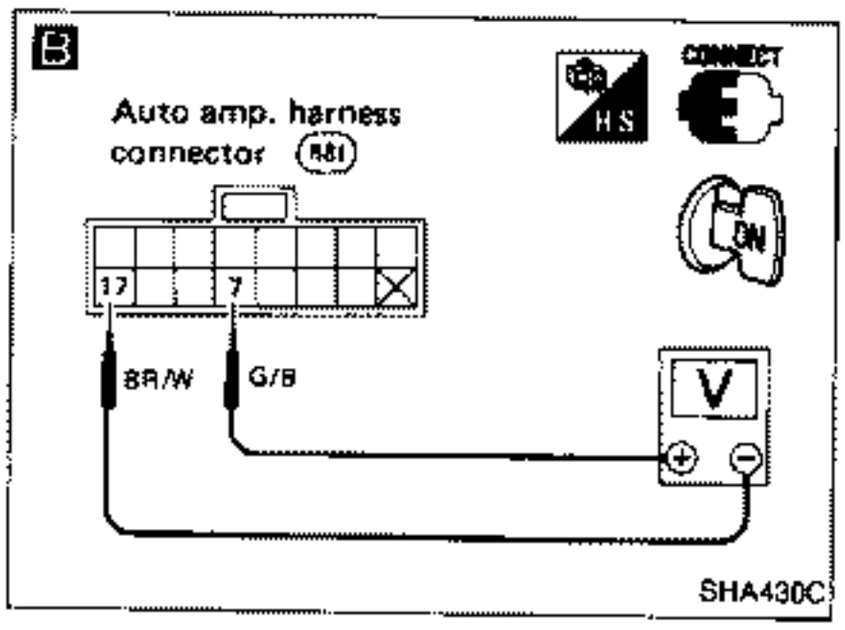

Diagnostic Procedure 22

SYMPTOM: When air conditioner switch is operated it does not beep.

A

Do approximately 12 volts exist between air conditioner switch unit harness connector terminal No. ⑦ and ⑰?

N.G. → Replace air conditioner switch

O.K. ↓

B

Do approximately 12 volts exist between auto amp. harness connector terminal No. ⑦ and ⑰?

N.G. → Repair harness or connector (terminal No. ⑰).

O.K. ↓

Check switch panel.
Refer to Electrical Components Inspection.

N.G. → Replace auto amp.

O.K. ↓

Replace switch panel.

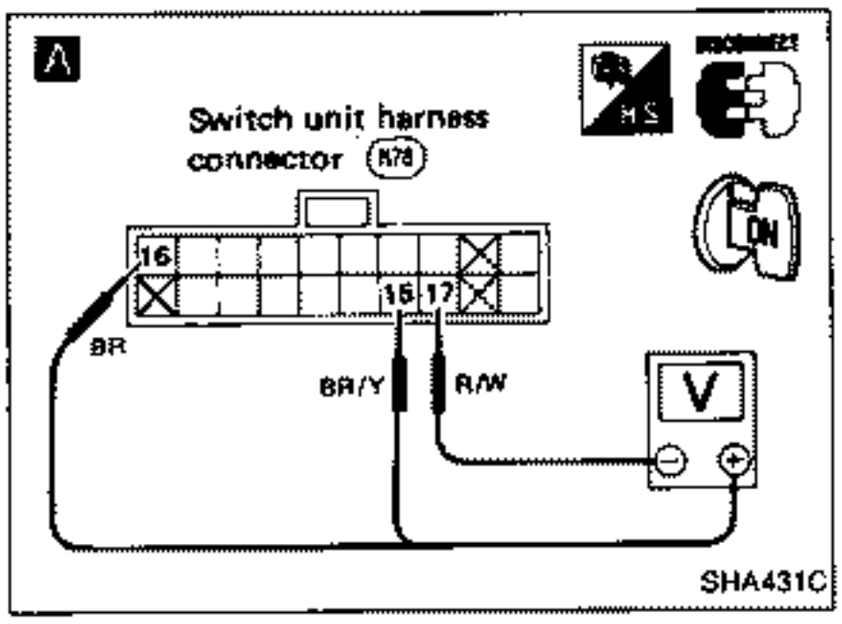

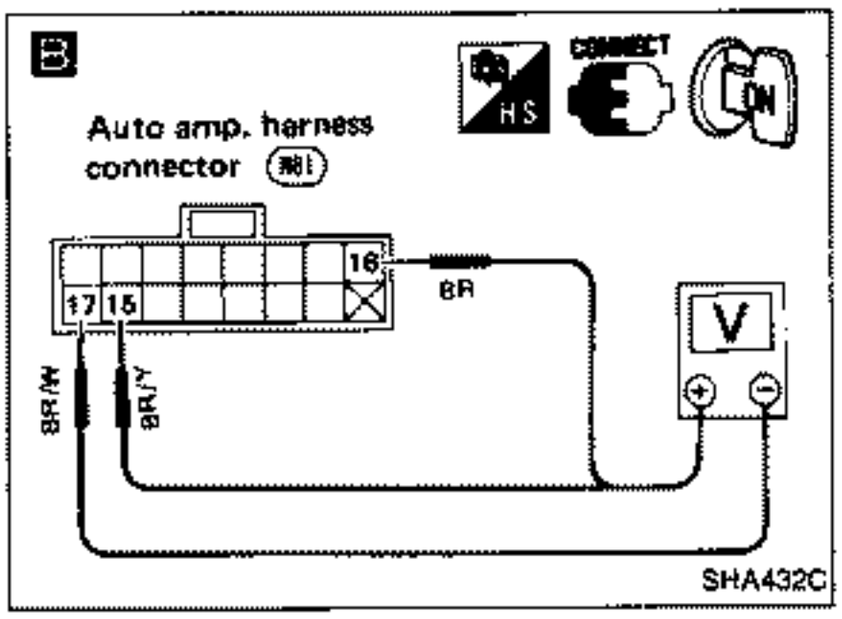

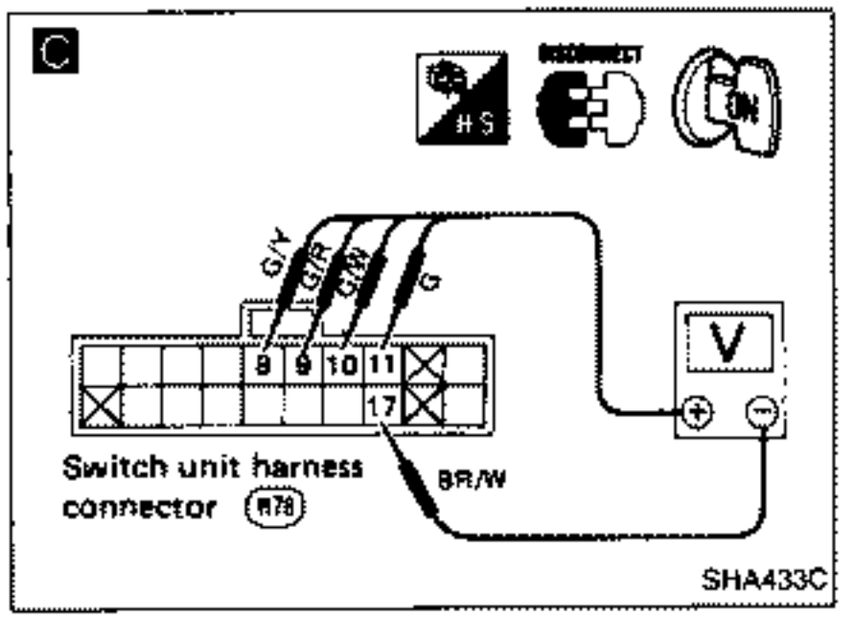

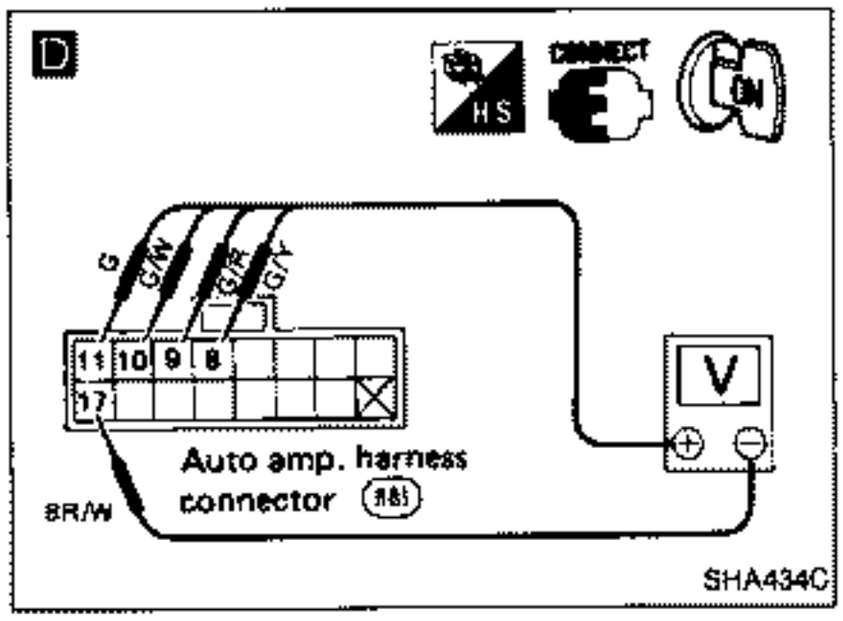

Diagnostic Procedure 23

SYMPTOM: Figures of set temperature and ambient temperature do not appear on the display window and Indicator lamp (L.E.D.) does not come on.

A

Do approximately 12 volts exist between switch unit harness connector terminal No. ⑮, ⑯ and ⑰?

N.G. →

B

Do approximately 12 volts exist between auto amp. harness connector terminal No. ⑮, ⑯ and ⑰?

O.K. ↓

C

Check switch unit.
Refer to Electrical Components Inspection.

N.G. →

D

Measure voltage between auto amp. harness connector terminal No. ⑧, ⑨, ⑩, ⑪ and ⑰.

Terminal No. ⊕	Terminal No. ⊖	Voltage (approx.)
⑧	⑰	1.0V
⑨	⑰	0.65V
⑩	⑰	0.8V
⑪	⑰	0V (Light OFF) 12V (Light ON)

O.K. ↓

Replace switch panel.

O.K. ↓

Repair harness or connector (Terminal No. ⑧, ⑨, ⑩, ⑪ and ⑰).

N.G. ↓

Replace auto amp.

O.K. ↓

Repair harness or connector (Terminal No. ⑮, ⑯ and ⑰).

N.G. ↓

Replace auto amp.

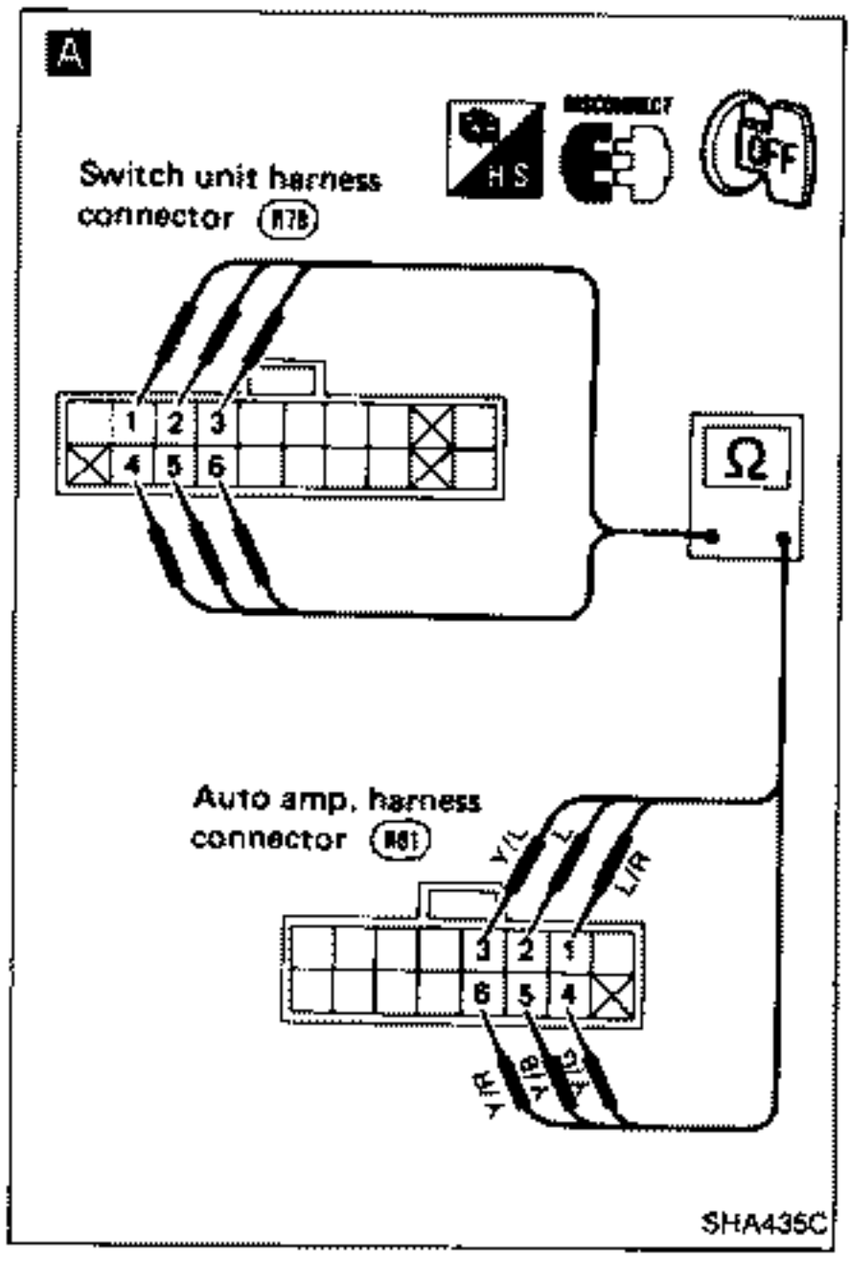

Diagnostic Procedure 24

SYMPTOM: Switches do not work.

Check switch panel.
Refer to Electrical Components Inspection.

N.G. → Replace switch panel.

O.K. ↓

A

Check continuity between auto amp. harness connector terminal No. ① ~ ⑥ and switch panel harness terminal No. ① ~ ⑥ respectively.

N.G. → Repair harness or connector.

O.K. ↓

Replace auto amp.

A

Blower control amp. harness connector (M67)

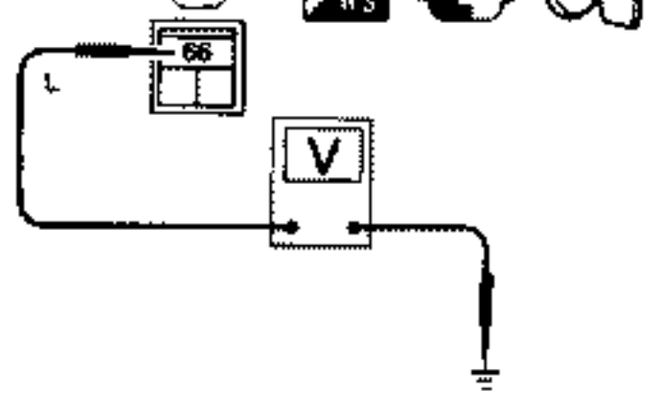

SHA449C

B

Blower control amp. harness connector (M67)

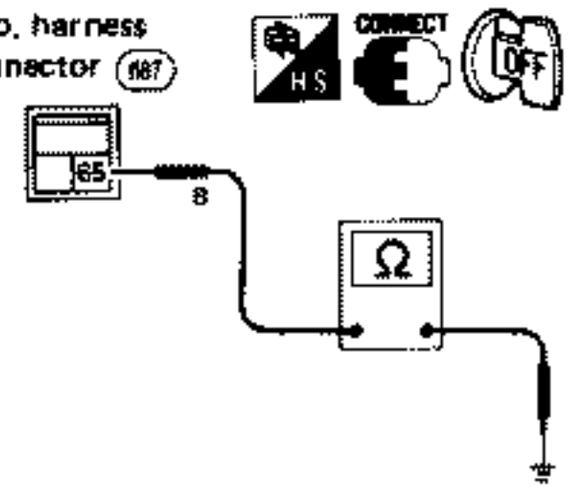

SHA450C

C

Blower control amp. harness connector (M67)

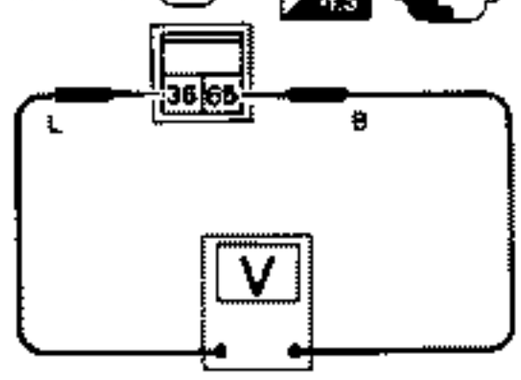

SHA451C

D

Blower motor harness connector (M53)

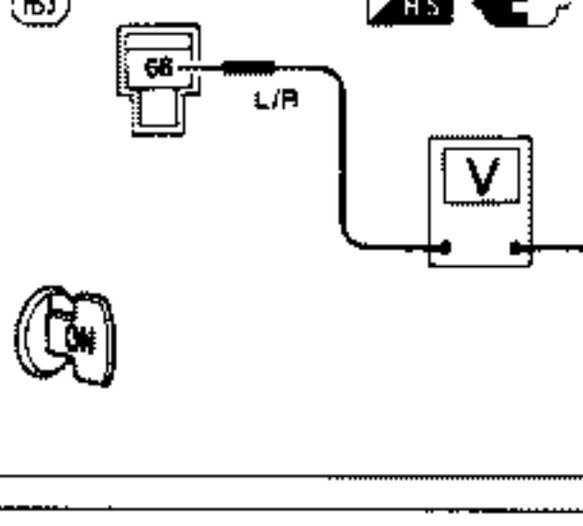

SHA452C

E



SHA453C

Diagnostic Procedure 25

SYMPTOM: Blower motor operation is malfunctioning.

- **Perform Preliminary check 5 before referring to the of flowing flow chart.**

A

CHECK POWER SUPPLY FOR FAN CONTROL AMP.
Do approximately 12 volts exist between fan control amp. harness connector terminal No. (66) and body ground?

N.G. → **D**

CHECK POWER SUPPLY FOR BLOWER MOTOR.
Do approximately 12 volts exist between blower motor harness connector terminal No. (68) and body ground?

O.K. ↓

N.G. → (B) (Go to page after next.)

B Note

CHECK BODY GROUND CIRCUIT FOR FAN CONTROL AMP.
Does continuity exist between fan control amp. harness connector terminal No. (65) and body ground?

O.K. ↓

C

CHECK OUTPUT OF AUTO AMP.
Set up "ACTIVE TEST" mode with CONSULT.
Set up self-diagnosis STEP 2.
Measure voltage across fan control amp. harness connector terminals No. (36) and (65).

Blower motor voltage (V)	Code No.	Terminal No. ⊕	Terminal No. ⊖	Voltage (Approx.) (V)
4	x 3	36	65	1.2
6	x 4			1.3
9	x 5			1.4
12	x 6			1.6

O.K. ↓

Replace fan control amp.

E Note

Check circuit continuity between blower motor harness connector terminal No. (67) and fan control amp. harness connector terminal No. (66).

O.K. ↓

CHECK BLOWER MOTOR.
(Refer to Electrical Components inspection.)

N.G. ↓

Replace blower motor.

O.K. → (A) (Go to next page.)

Diagnostic Procedure 25 (Cont'd)

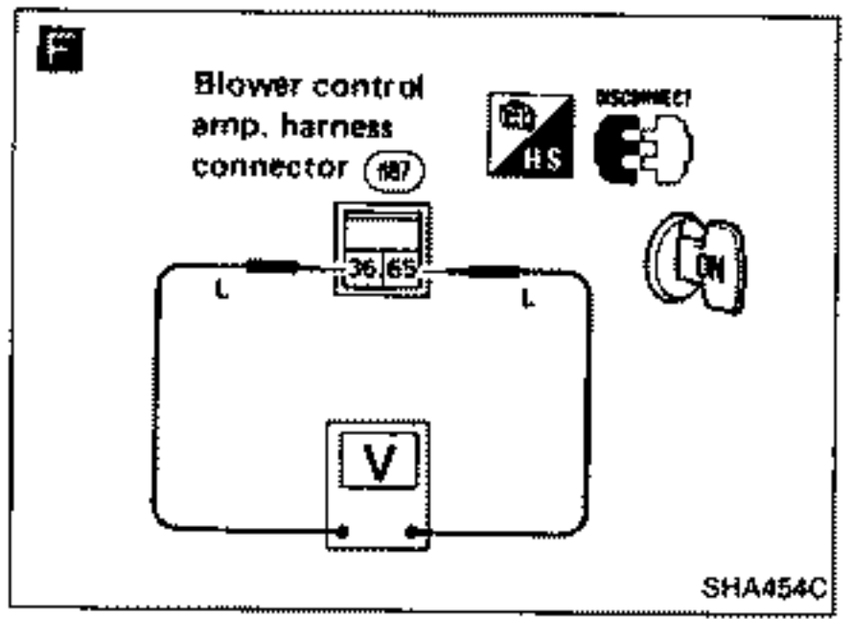

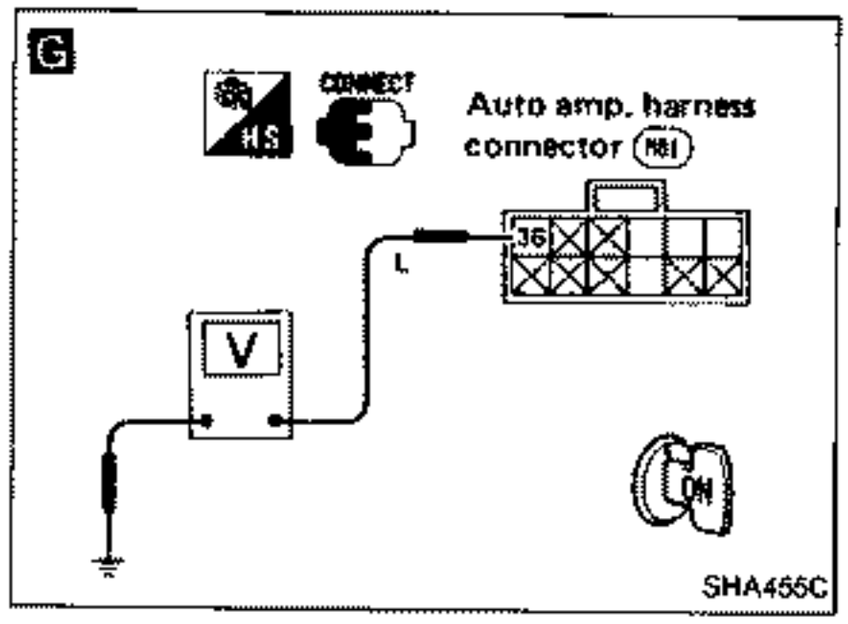

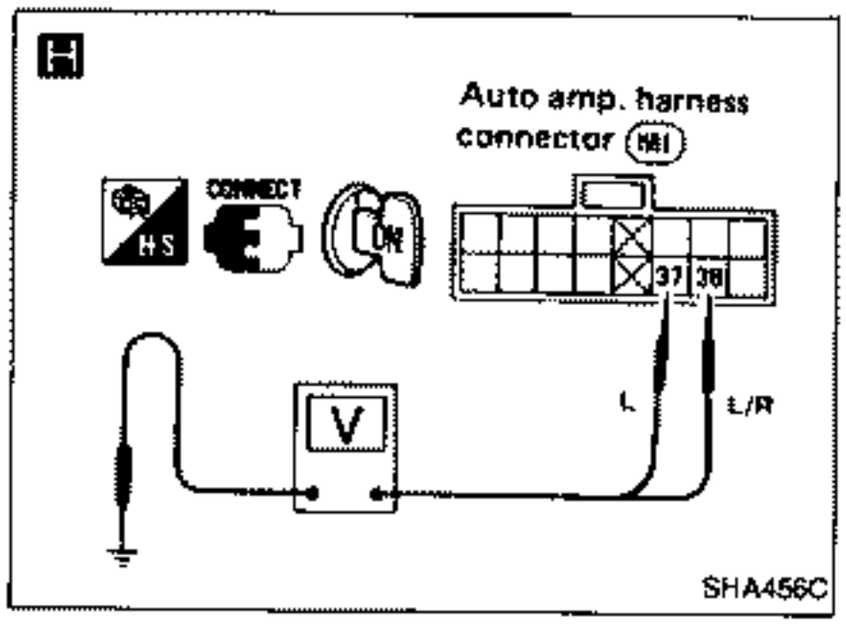

F

Set up "ACTIVE TEST" mode with CONSULT.
Set blower motor voltage at 9 volts

Set up self-diagnosis STEP 2. Set code No. in X5.

Do approximately 12 volts exist between fan control amp. harness connector terminal No. (36) and (65)?

N.G. → G

O.K. ↓

Replace fan control amp.

G

CHECK FOR OUTPUT OF AUTO AMP.

Set up "ACTIVE TEST" mode with CONSULT.
Set blower motor voltage at 9 volts

Set up self-diagnosis STEP 2. Set code No. in X5.

Do approximately 12 volts exist between auto amp. harness connector terminal No. (36) and body ground?

N.G. → Repair harness or connector

O.K. → H

H

CHECK FOR FEEDBACK SIGNAL TO AUTO AMP.
Disconnect fan control amp. connector only.
Do approximately 12 volts exist between auto amp. harness connector terminal No. (37), (38) and body ground?

N.G. → Repair harness or connector

O.K. → Replace auto amp.

Diagnostic Procedure 25 (Cont'd)

I

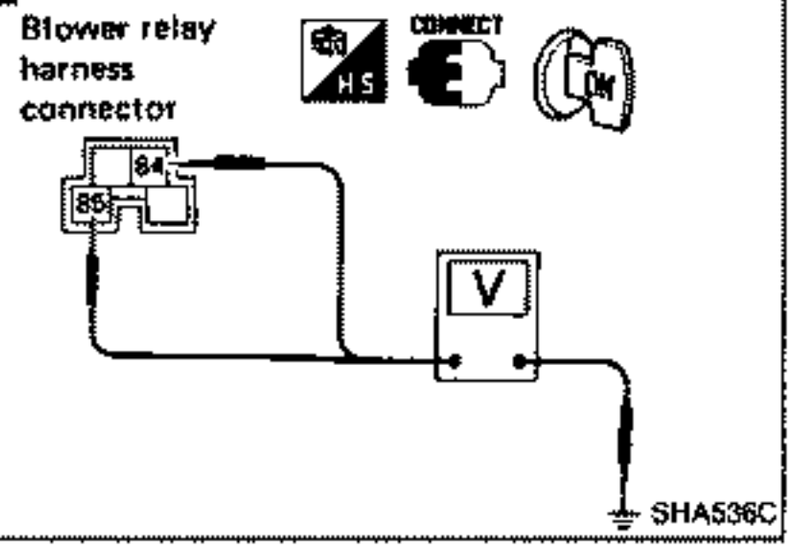

J

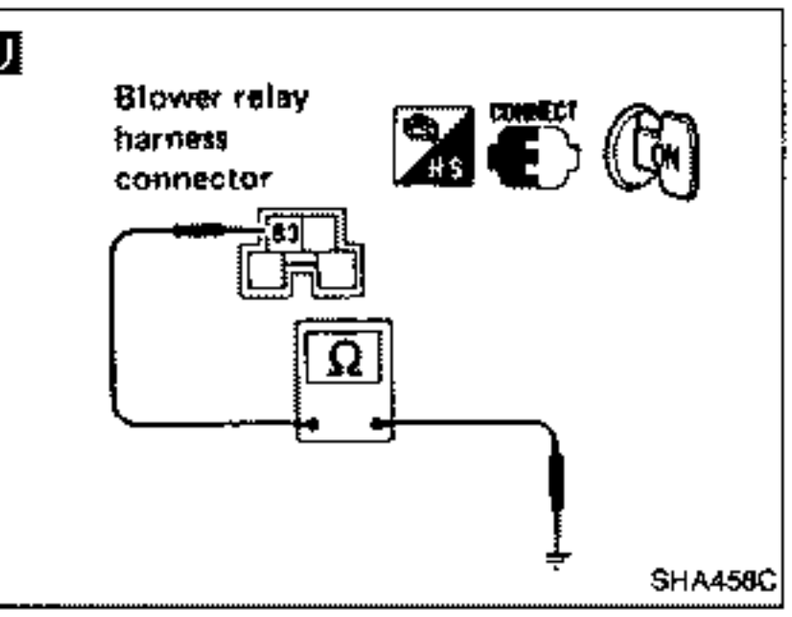

K

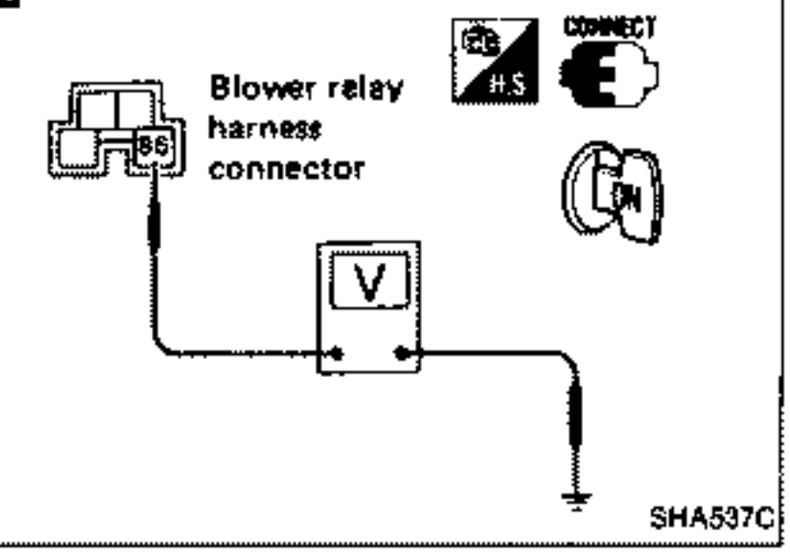

L

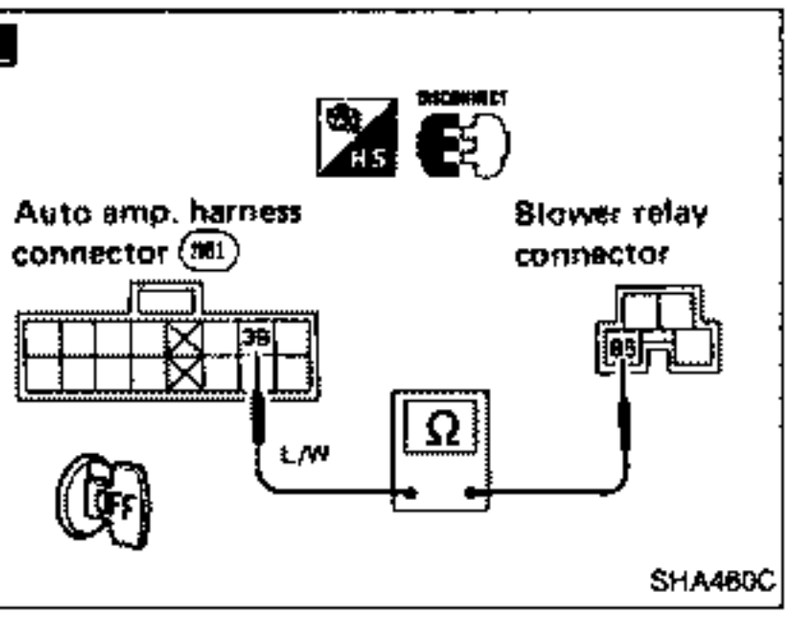

(B)

I

CHECK POWER SUPPLY FOR BLOWER RELAY.
Do approximately 12 volts exist between blower relay harness connector terminal No. (84), (86) and body ground?

N.G. → Check power supply circuit. (Refer to "POWER SUPPLY ROUTING" in EL section.)

O.K. ↓

J

Do approximately 12 volts exist between blower relay harness connector terminal No. (83) and body ground?

N.G. → K

Check voltage between blower relay harness connector terminal No. (86) and body ground is less than 1.5 volt.

O.K. → Replace blower relay.

N.G. → Note

L

Does continuity exist between blower relay harness connector terminal No. (85) and auto amp. harness connector terminal No. (39).

→ Replace auto amp.

Note:
If the result is N.G. after checking circuit continuity, repair harness or connector.

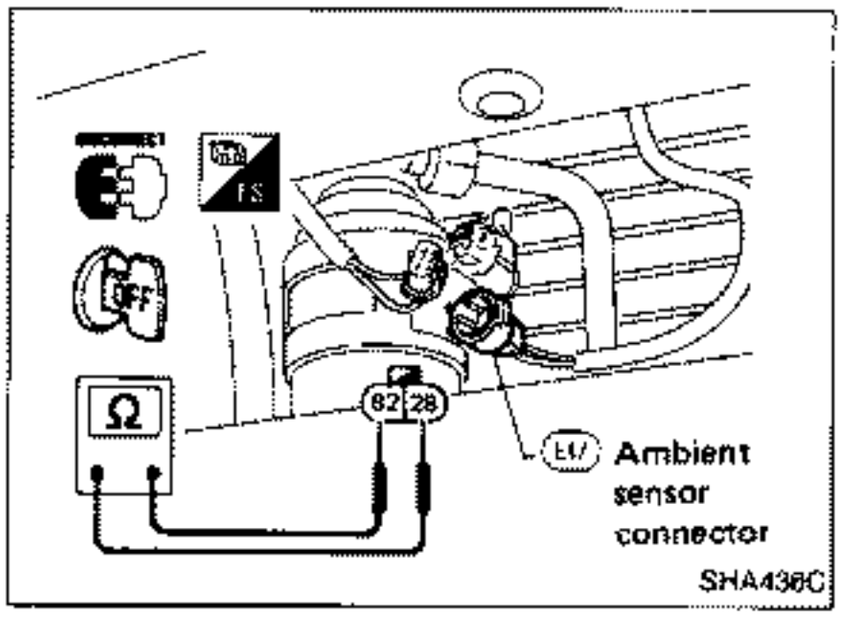

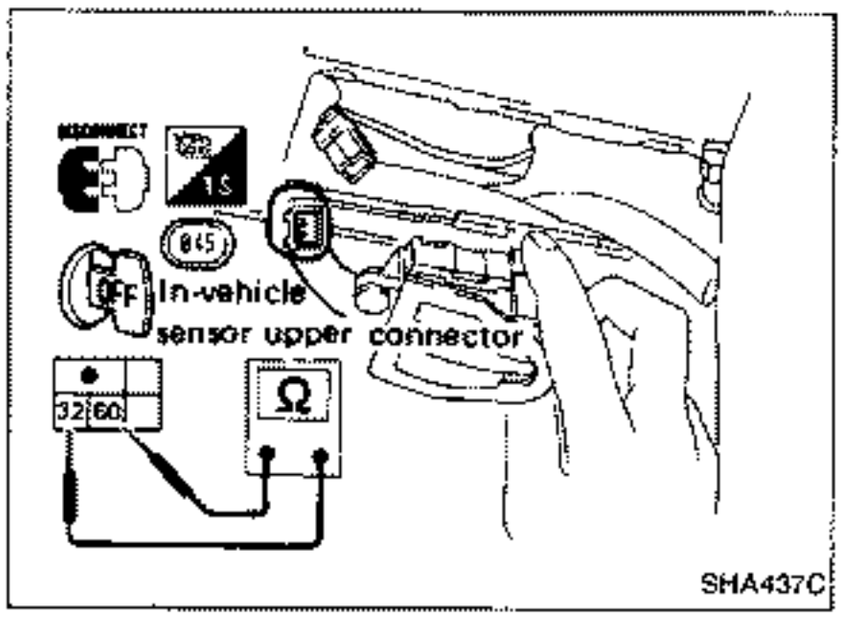

IN-VEHICLE SENSOR LOWER AND FLOOR DUCT SENSOR

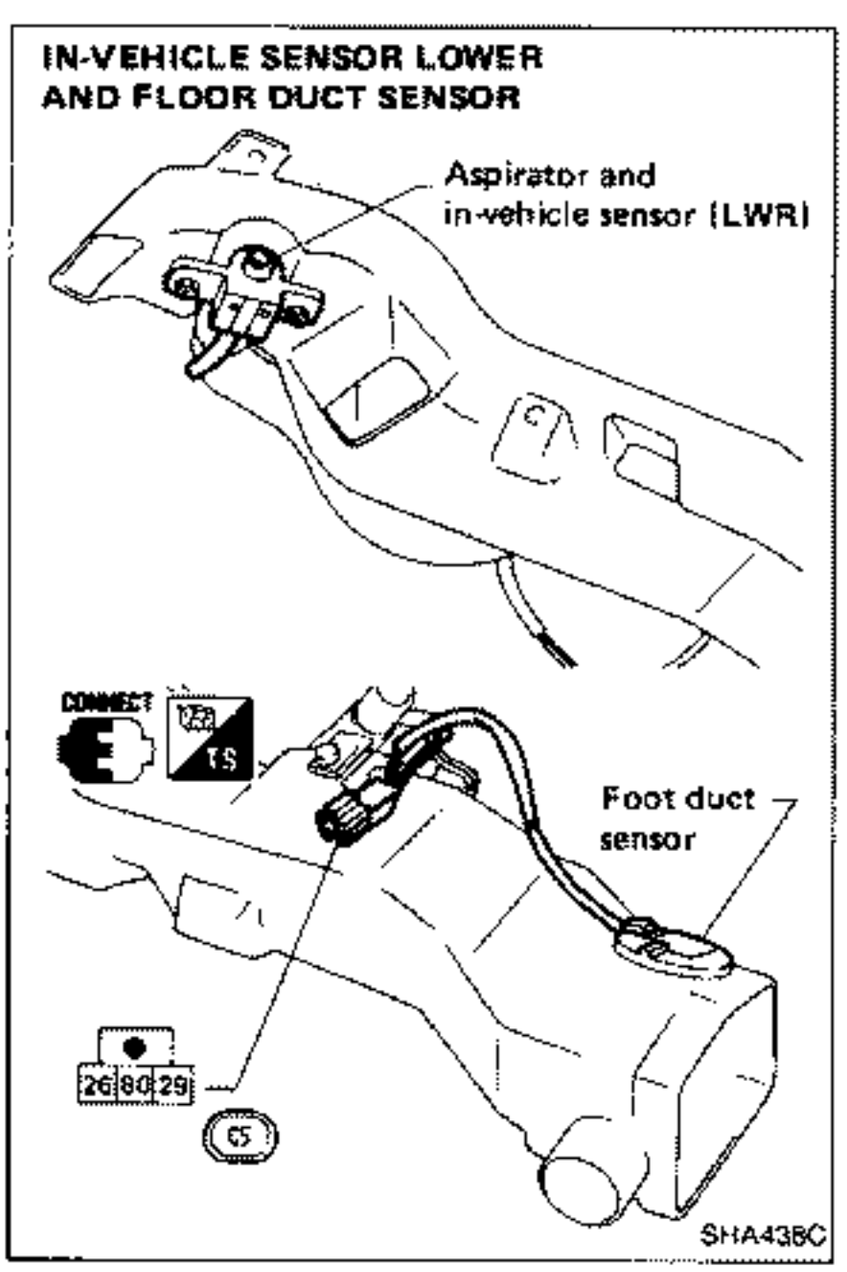

DEFROSTER DUCT SENSOR

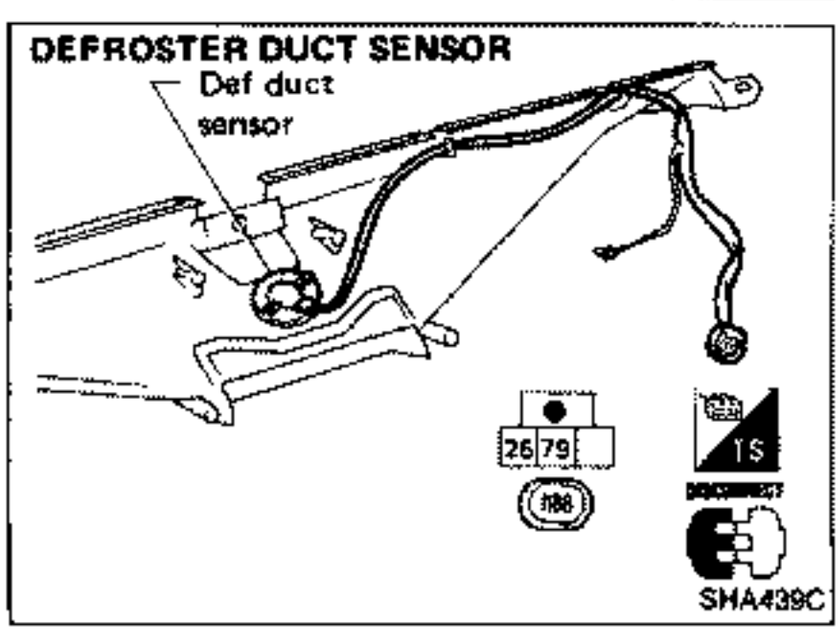

Electrical Components Inspection

TEMPERATURE SENSORS

After disconnecting temperature sensors harness connector measure resistance between terminals of each sensor, using the table below.

Temperature °C (°F)	Resistance kΩ
–40 (–40)	210.55
–35 (–31)	146.86
–30 (–22)	103.97
–25 (–13)	74.63
–20 (–4)	54.28
–15 (5)	39.97
–10 (14)	29.77
–5 (23)	22.43
0 (32)	17.07
5 (41)	13.11
10 (50)	10.18
15 (59)	7.96
20 (68)	6.29
25 (77)	5.00
30 (86)	4.01
35 (95)	3.24
40 (104)	2.63
45 (113)	2.15
50 (122)	1.77
55 (131)	1.47
60 (140)	1.22
65 (149)	1.02
70 (158)	0.86
75 (167)	0.73
80 (176)	0.62

Electrical Components Inspection (Cont'd)

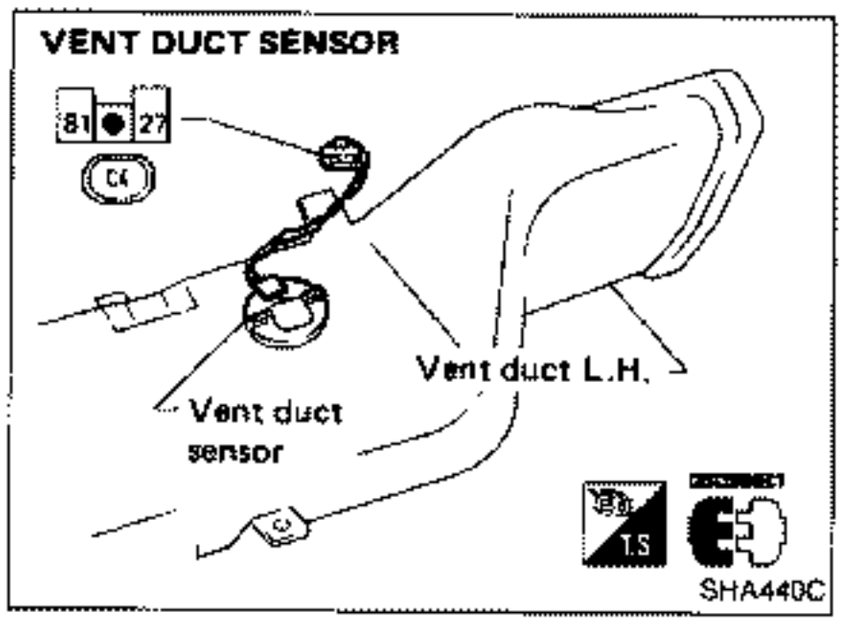

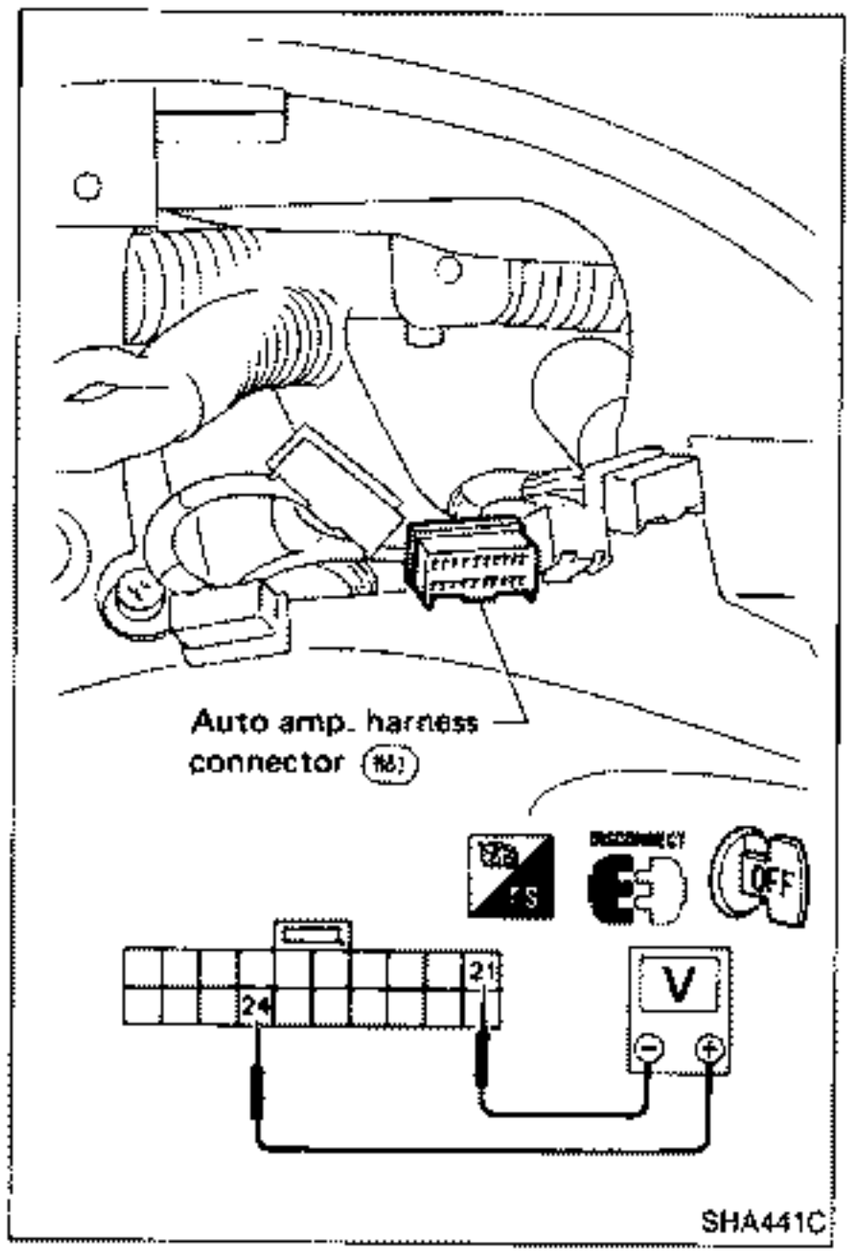

SUNLOAD SENSOR

Measure voltage between terminals ㉑ and ㉔ at vehicle harness side using the table below.

Input current mA	Output voltage (V)
0	5
0.1	4
0.2	3
0.3	2
0.4	1
0.5	0

- When checking sunload sensor, select a place where sun shines on it directly.

MODE DOOR MOTOR

Check to see if motor rotates when 12V is applied across mode door motor connector terminals No. ㊼ and No. ㊿.

Terminal No.		Mode door operation
㊼	㊿	
⊖	⊕	VENT → DEF
⊖	⊖	STOP
⊕	⊖	DEF → VENT

Check to see if mode door P.B.R. resistance is varied according to mode door position, as shown in the following table.

Mode door position	Resistance between terminal No. ㊻ and ㊼
DEF	3 kΩ
FOOT/DEF	1.6 kΩ
B/L	0.7 kΩ
VENT	0Ω

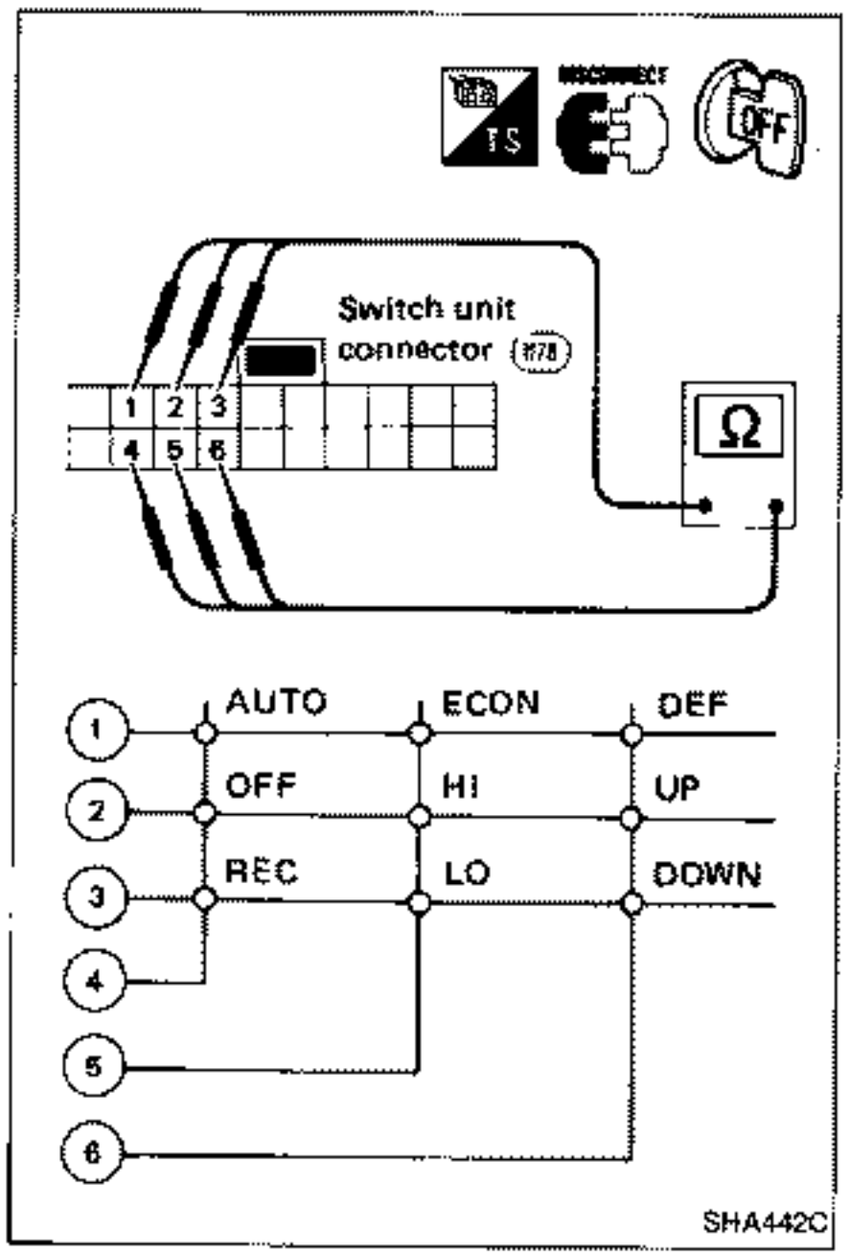

Electrical Components Inspection (Cont'd)

AIR CONDITIONER SWITCH UNIT

Check the resistance between switch unit connector terminals as follows:

Switch condition	Resistance
Press	Less than 500Ω
Free	∞

Example:
When Auto switch is pressed, the resistance between terminal No. ① and ④ is less than 500Ω.

BLOWER MOTOR

- Refer to page HA-92.

RELAY

- Refer to page HA-93.

LOW-PRESSURE SWITCH

- Refer to page HA-93.

General Specifications

COMPRESSOR

Model	HITACHI make MJS170
Type	Swash plate
Displacement cm^3 (cu in)/Rev.	170 (10.37)
Cylinder bore x stroke mm (in)	40.0 x 22.6 (1.575 x 0.890)
Direction of rotation	Clockwise (Viewed from drive end)
Drive belt	Poly V

LUBRICATION OIL

Model	HITACHI make MJS170
Type	SUNISO 5GS
Capacity mℓ (Imp fl oz)	
Total in system	150 (5.3)
Amount of oil which can be drained	Approx. 120 (4.2)
Compressor (Service parts) charging amount	150 (5.3)

REFRIGERANT

Type	R-12
Capacity kg (lb)	
VG30DE engine model	0.85 - 0.95 (1.87 - 2.09)
VG30DETT engine model	0.75 - 0.85 (1.65 - 1.87)

Inspection and Adjustment

ENGINE IDLING SPEED (When A/C is ON.)

- **Refer to EF & EC section.**

BELT TENSION

- **Refer to Checking Drive Belts (MA section).**

COMPRESSOR

Model	MJS170
Clutch disc-pulley clearance mm (in)	0.5 - 0.8 (0.020 - 0.031)

ELECTRICAL SYSTEM

SECTION EL

When you read wiring diagrams:
- **Read GI section, "HOW TO READ WIRING DIAGRAMS".**

CONTENTS

HARNESS CONNECTOR ..... EL- 2
STANDARDIZED RELAY ..... EL- 3
POWER SUPPLY ROUTING ..... EL- 5
BATTERY ..... EL- 9
STARTING SYSTEM ..... EL- 17
STARTING SYSTEM — Starter — ..... EL- 19
CHARGING SYSTEM ..... EL- 25
CHARGING SYSTEM — Alternator — ..... EL- 27
COMBINATION SWITCH ..... EL- 35
INSTRUMENT SWITCH ..... EL- 38
HEADLAMP ..... EL- 40
HEADLAMP — Headlamp Aiming Control ..... EL- 48
EXTERIOR LAMP ..... EL- 56
INTERIOR LAMP ..... EL- 62
METER AND GAUGES ..... EL- 65
WARNING LAMPS AND CHIME ..... EL- 70
TIME CONTROL SYSTEM ..... EL- 75
WIPER AND WASHER ..... EL- 83
HORN, CIGARETTE LIGHTER, CLOCK ..... EL- 89
REAR WINDOW DEFOGGER ..... EL- 90
AUDIO AND POWER ANTENNA ..... EL- 93
AUTOMATIC SPEED CONTROL DEVICE (A.S.C.D.) ..... EL- 99
LOCATION OF ELECTRICAL UNITS EL-109
HARNESS LAYOUT EL-114

WIRING DIAGRAM REFERENCE CHART

E.C.C.S. ..... EF & EC SECTION
AT CONTROL ..... AT SECTION
TRANSMISSION OIL COOLER ..... MT SECTION
DIFFERENTIAL OIL COOLER ..... PD SECTION
ADJUSTABLE SHOCK ABSORBER ..... RA SECTION
ANTI-LOCK BRAKING SYSTEM ..... BR SECTION
POWER STEERING, SUPER HICAS ..... ST SECTION
POWER WINDOW, POWER DOOR LOCK, POWER SEAT, DOOR MIRROR ..... BF SECTION
HEATER AND AIR CONDITIONER ..... HA SECTION

Description

HARNESS CONNECTOR

- All harness connectors have been modified to prevent accidental loosing or disconnection.
- The connector can be disconnected by pushing or lifting the locking section.

CAUTION:

Do not pull the harness when disconnecting the connector.

[Example]

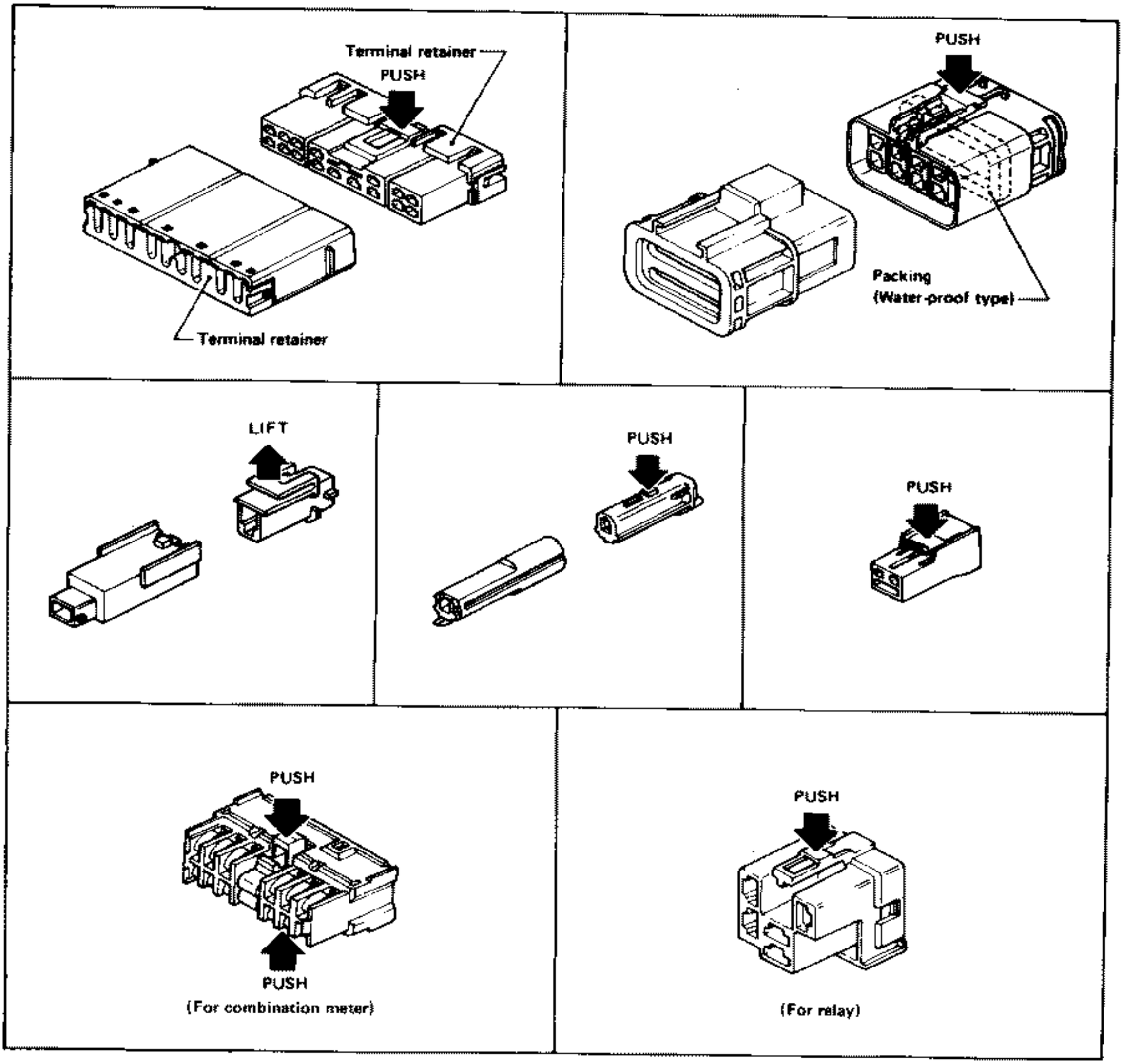

SEL769D

Description

NORMAL OPEN, NORMAL CLOSED AND MIXED TYPE RELAYS

Relays can mainly be divided into three types: normal open, normal closed and mixed type relays.

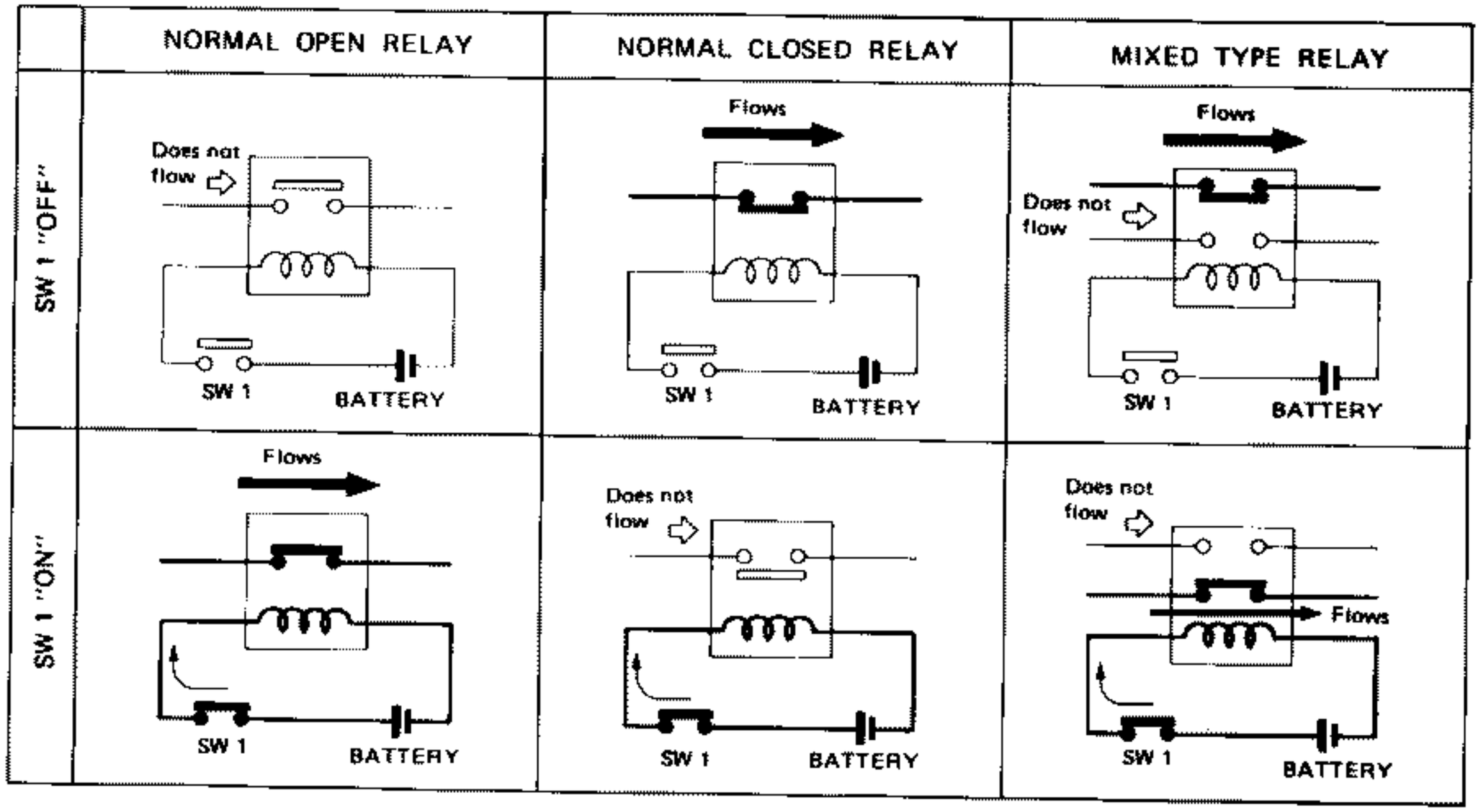

SEL881H

TYPE OF STANDARDIZED RELAYS

1M ..... 1 Make
1T ..... 1 Transfer
2M ..... 2 Make
1M·1B ..... 1 Make 1 Break

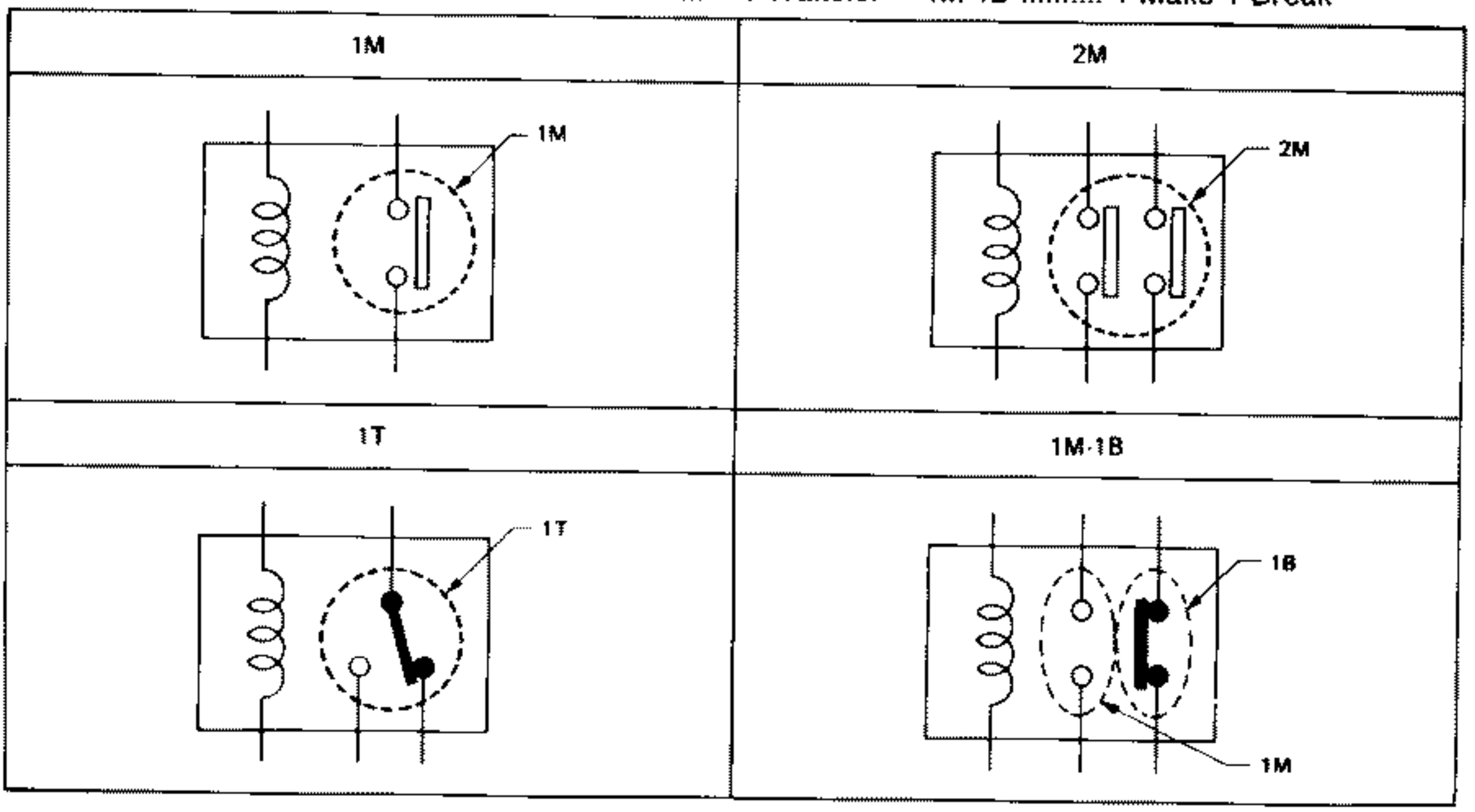

SEL882H

Type	Outer view	Circuit	Connector symbol and connection	Case color
1T	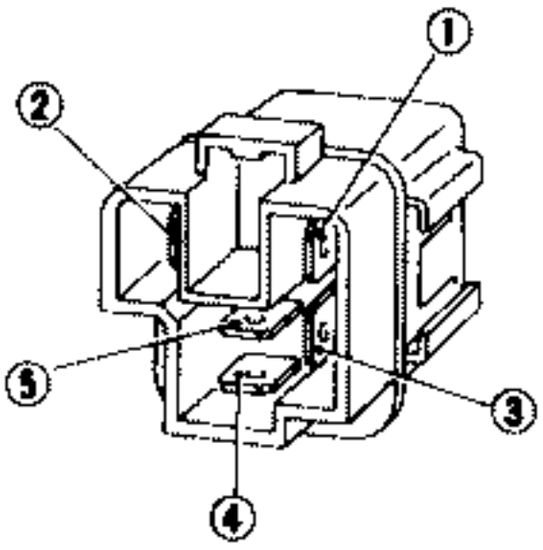	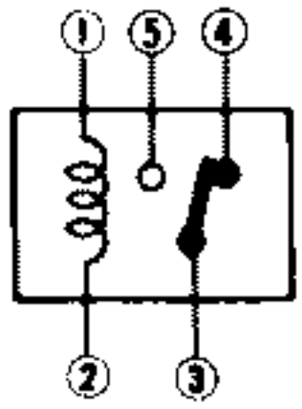	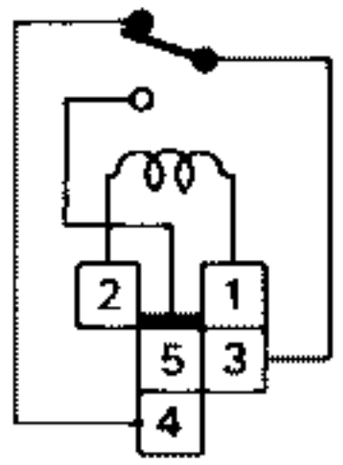	BLACK
1M	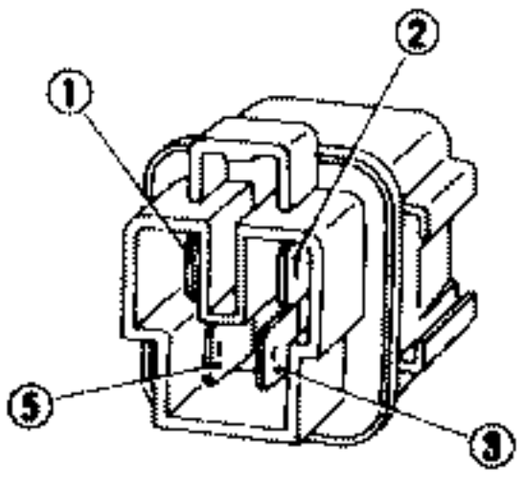	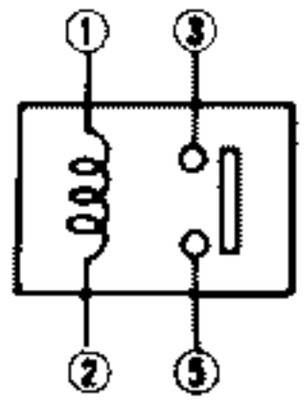	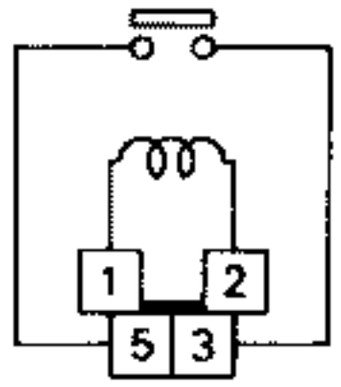	BLUE or GREEN
2M	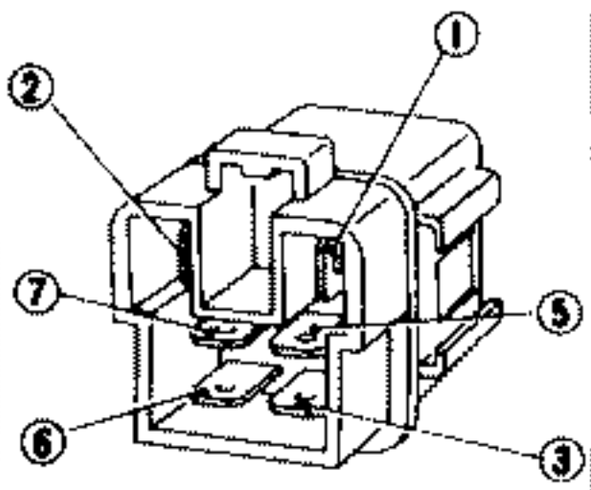	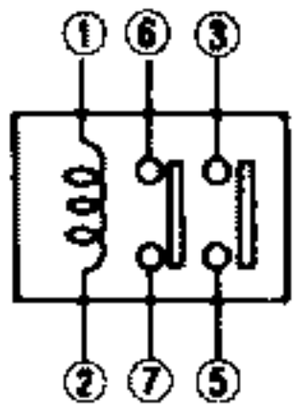	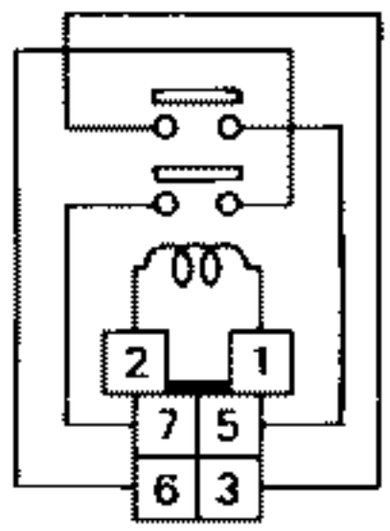	BROWN
1M-1B	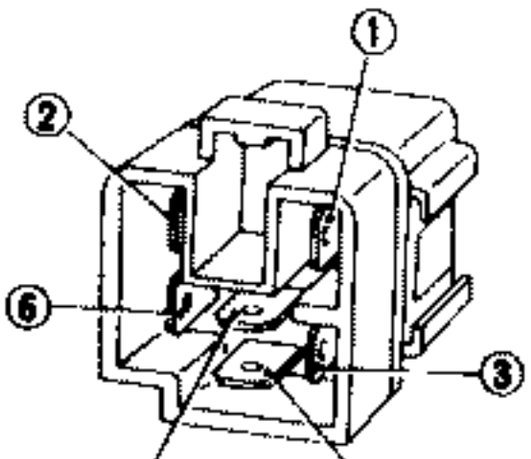	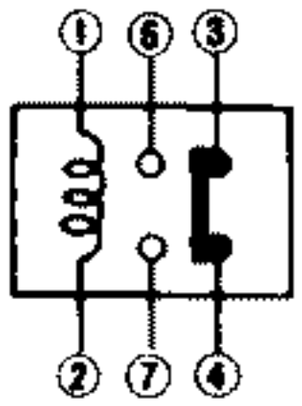	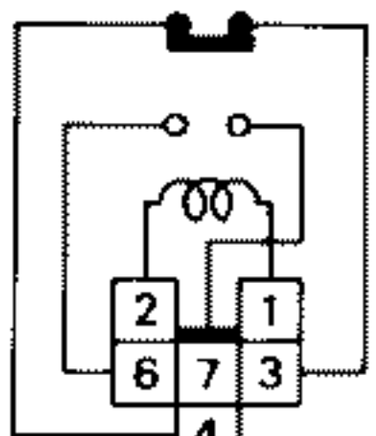	GRAY

SEL883H

Wiring Diagram

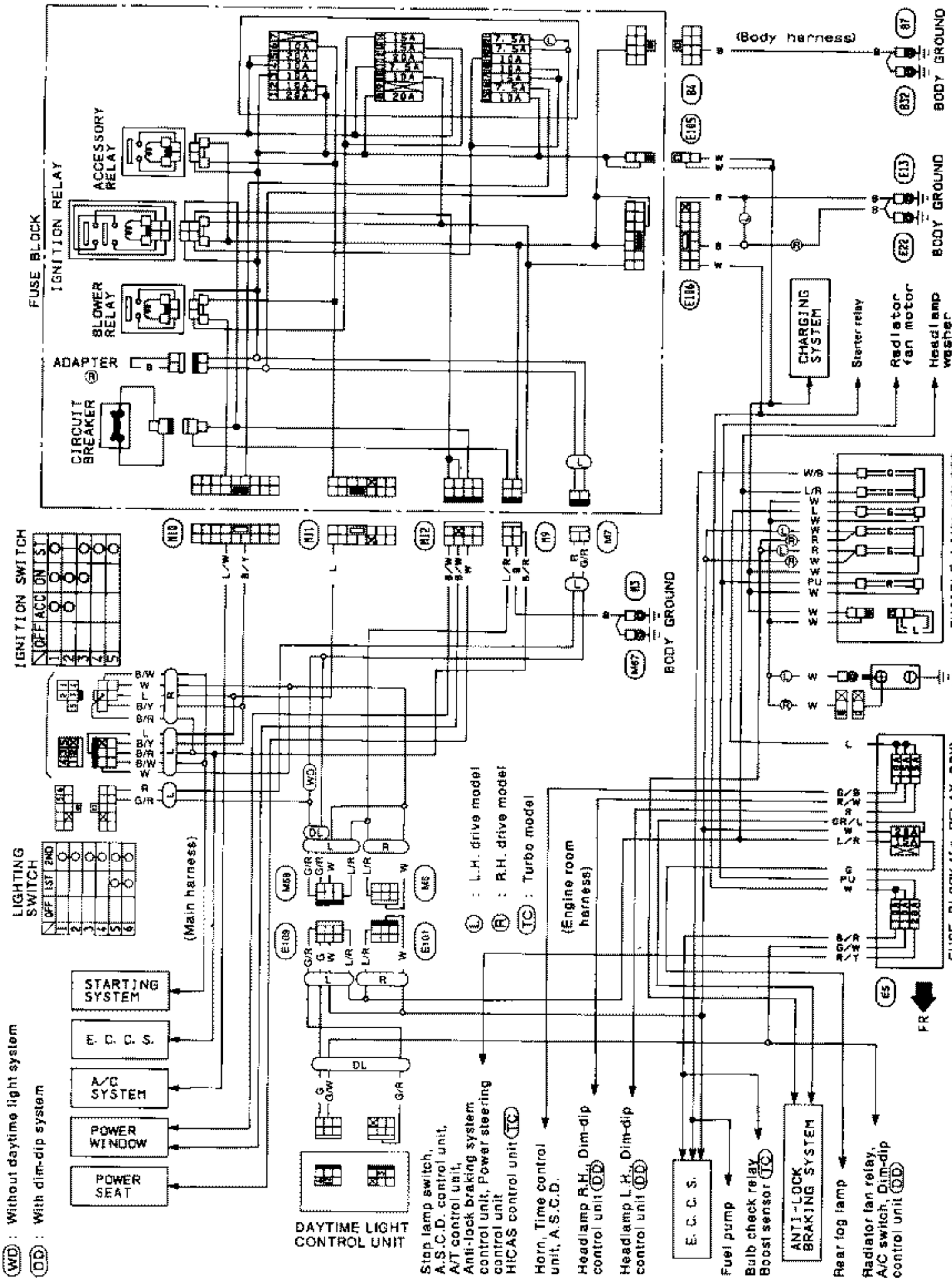

SEL307P

Wiring Diagram (Cont'd)

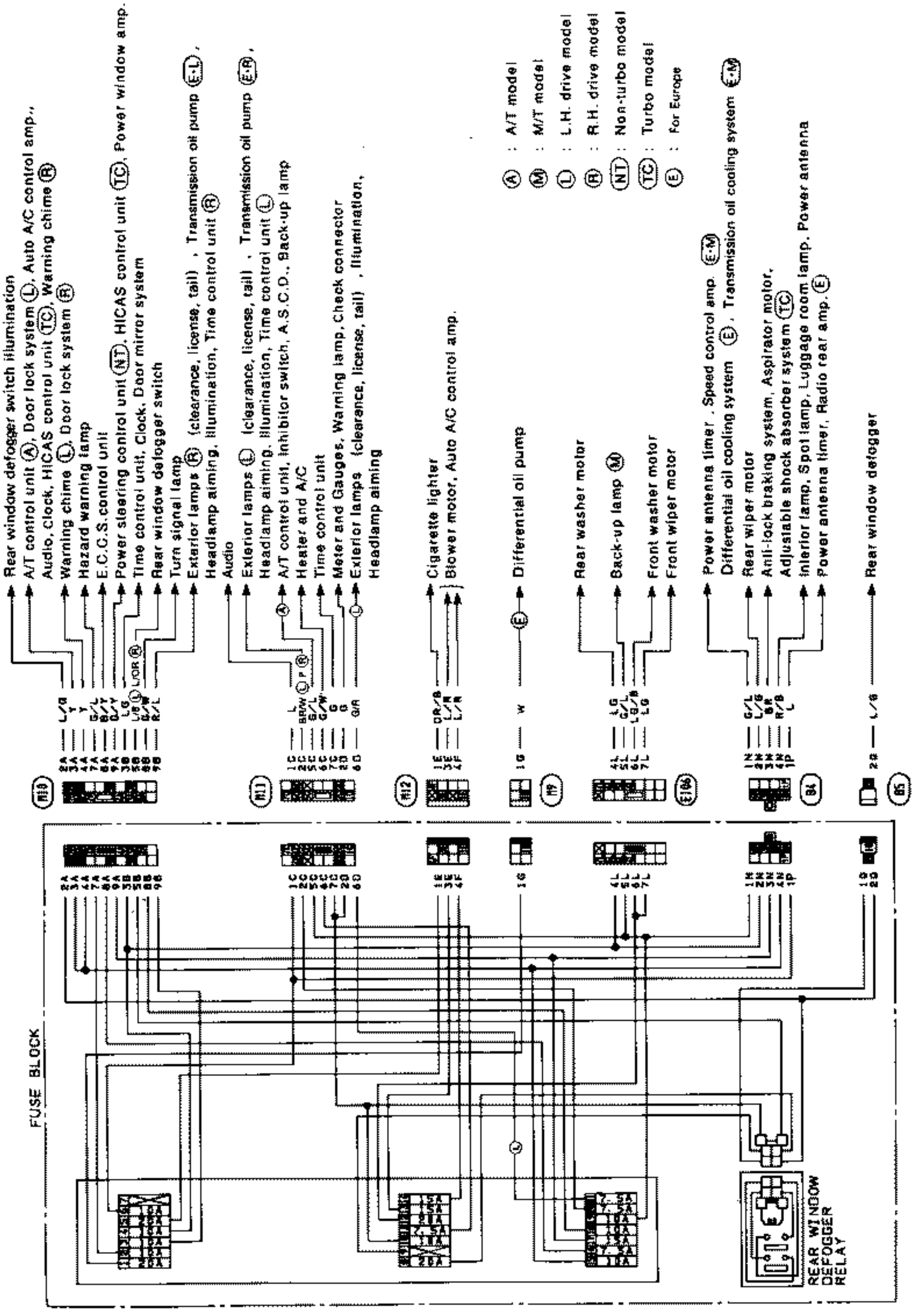

SEL306P

Fuse Block Internal Circuit

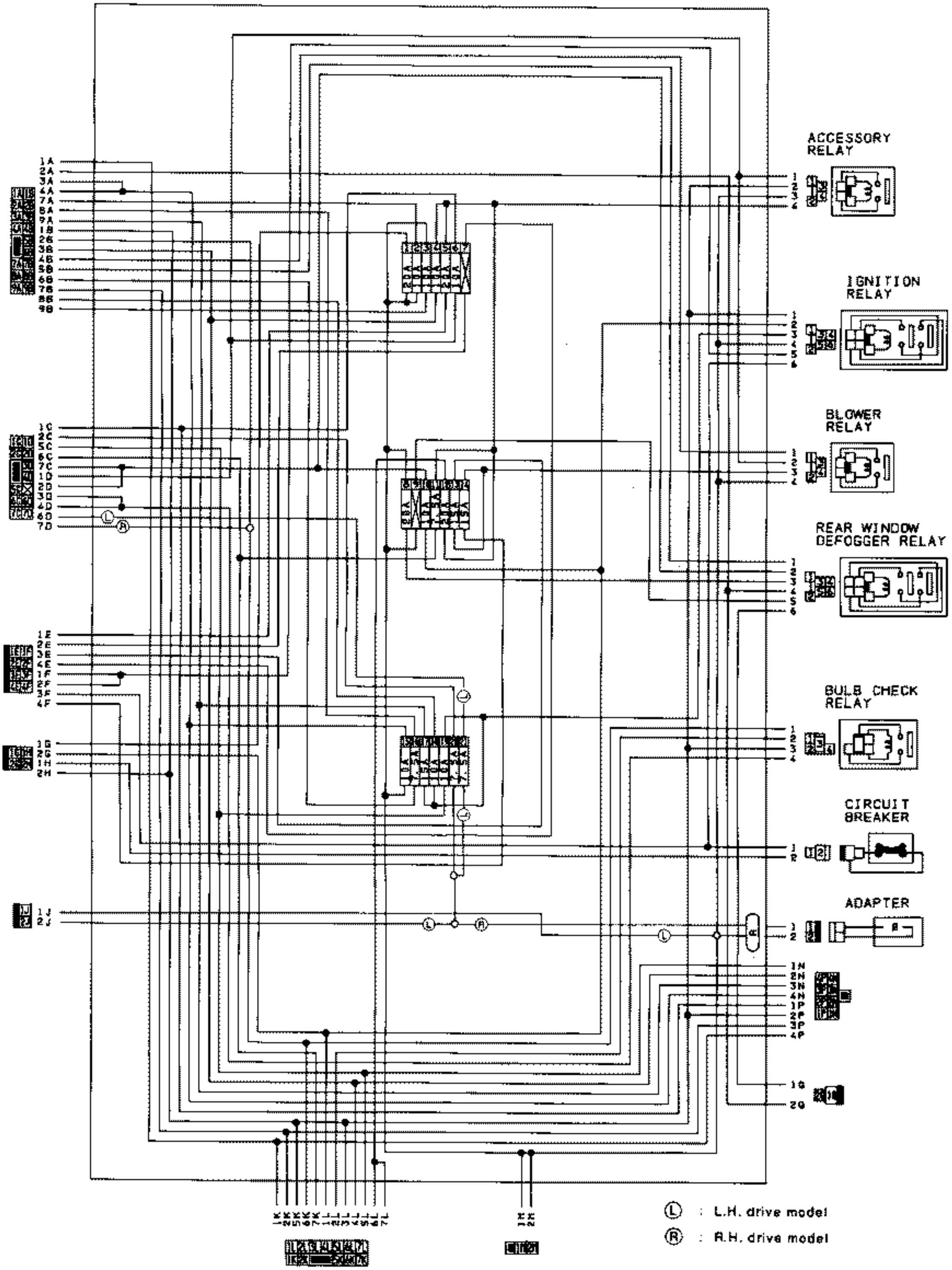

SEL309P

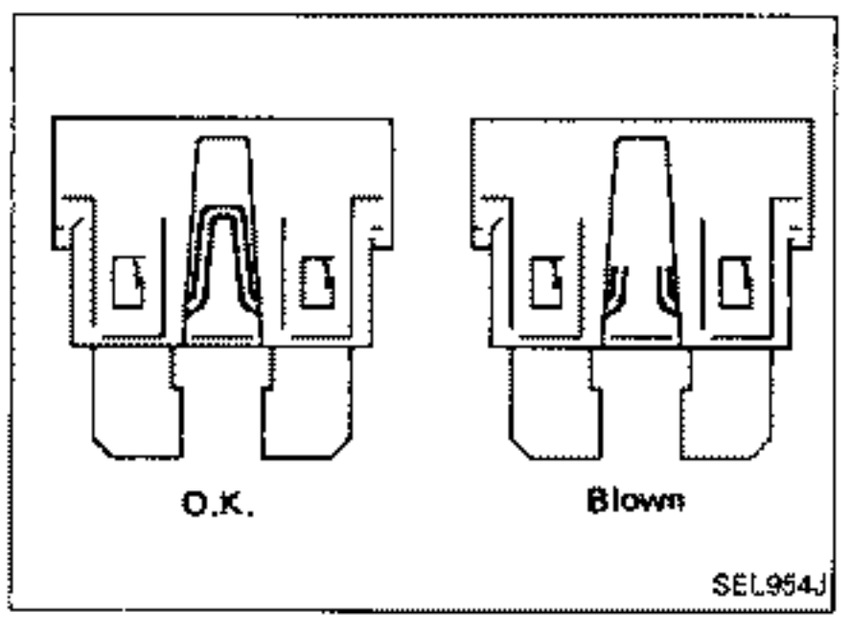

Fuse

a. If fuse is blown, be sure to eliminate cause of problem before installing new fuse.
b. Use fuse of specified rating. Never use fuse of more than specified rating.
c. Do not install fuse in oblique direction; always insert it into fuse holder properly.
d. Remove fuse for clock if vehicle is not used for a long period of time.

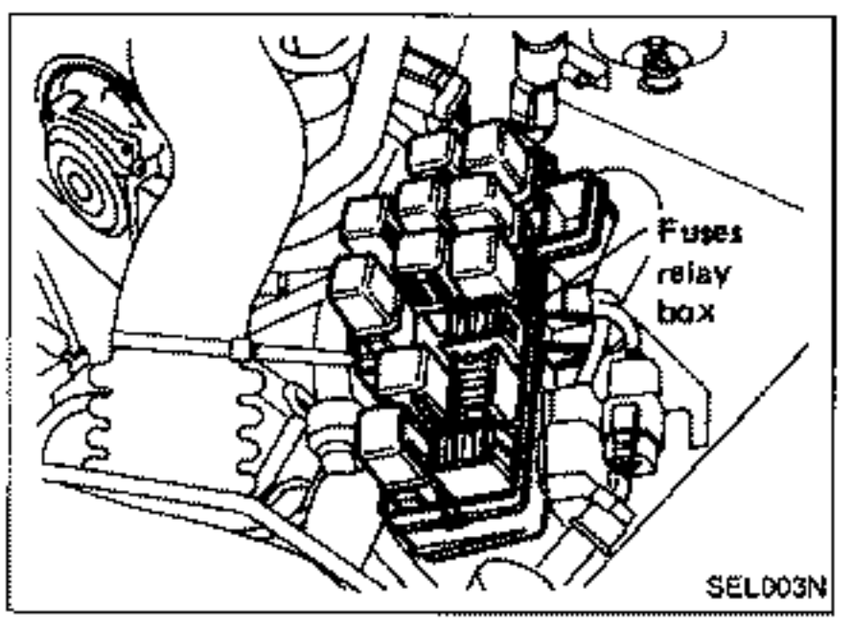

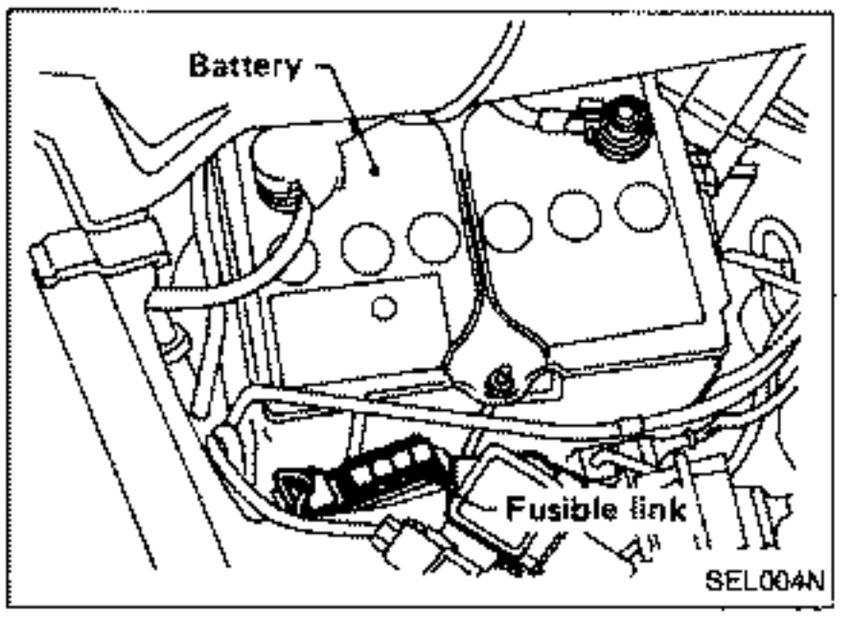

Fusible Link

A melted fusible link can be detected either by visual inspection or by feeling with finger tip. If its condition is questionable, use circuit tester or test lamp.

CAUTION:

a. If fusible link should melt, it is possible that a critical circuit (power supply or large current carrying circuit) is shorted. In such a case, carefully check these circuits and eliminate cause of problem.
b. Never wrap periphery of fusible link with vinyl tape. Extreme care should be taken with this link to ensure that it does not come into contact with any other wiring harness, or vinyl or rubber parts.

CAUTION:

a. **If it becomes necessary to start the engine with a booster battery and jumper cables, use a 12-volt booster battery.**
b. **After connecting battery cables, ensure that they are tightly clamped to battery terminals for good contact.**
c. **Never add distilled water through the hole used to check specific gravity.**

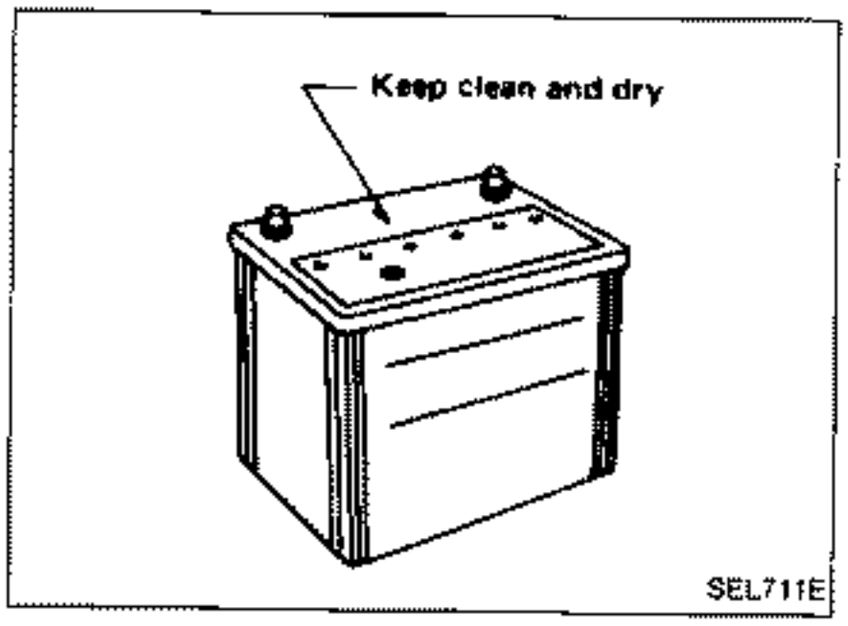

How to Handle Battery

METHODS OF PREVENTING OVER-DISCHARGE

The following precautions must be taken to prevent over-discharging a battery.

- The battery surface (particularly its top) should always be kept clean and dry.
  If the top surface of a battery is wet with electrolyte or water, leakage current will cause the battery to discharge. Always keep the battery clean and dry.

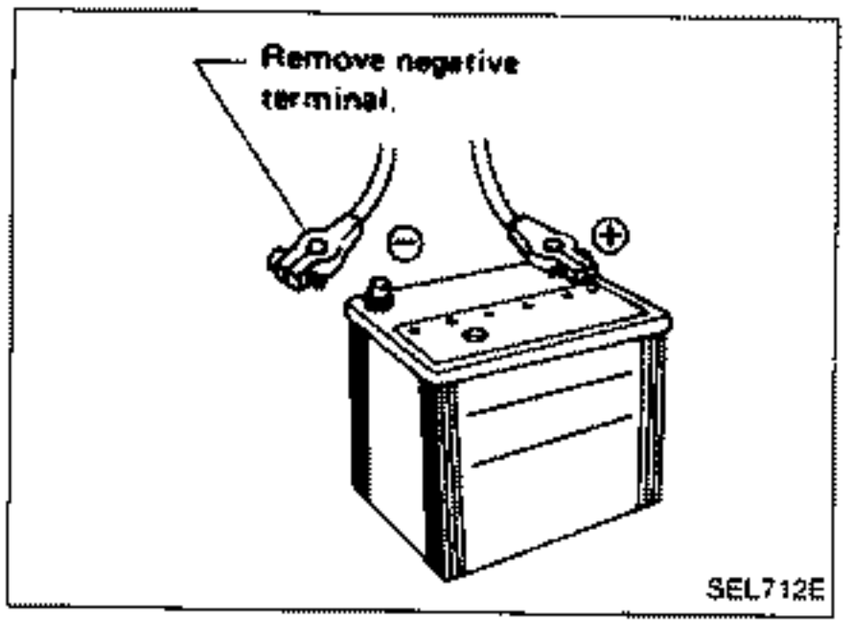

- When the vehicle is not going to be used over a long period of time, disconnect the negative battery terminal. (If the vehicle has an extended storage switch, turn it off.)

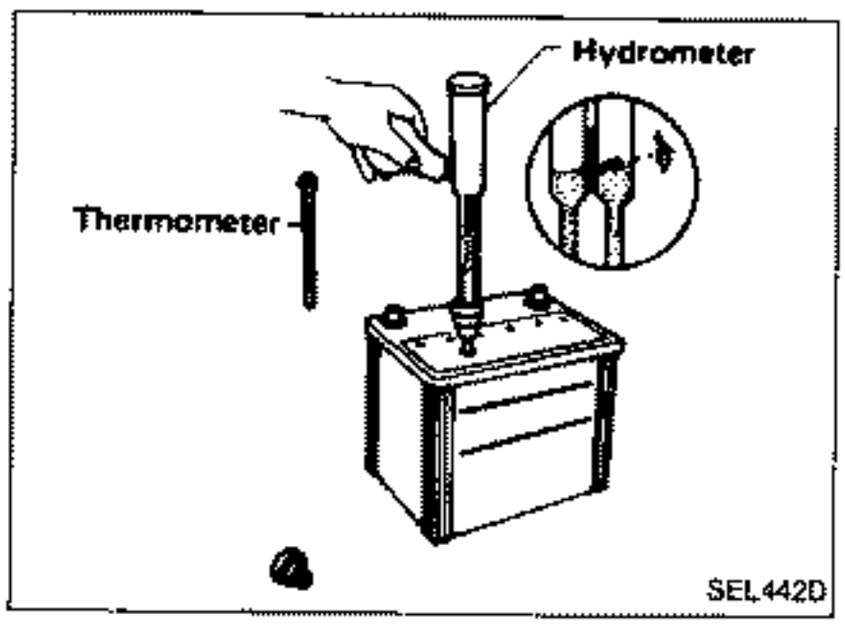

- Check the charge condition of the battery.
  Periodically check the specific gravity of the electrolyte. Keep a close check on charge condition to prevent over-discharge.

CHECKING ELECTROLYTE LEVEL

WARNING:

Do not allow battery fluid to come in contact with skin, eyes, fabrics,or painted surfaces. After touching a battery, do not touch or rub your eyes until you have thoroughly washed your hands. If the acid contacts the eyes, skin or clothing, immediately flush with water for 15 minutes and seek medical attention.

Normally the battery does not require additional water. However, when the battery is used under severe conditions, adding distilled water may be necessary during the battery life.

How to Handle Battery (Cont'd)

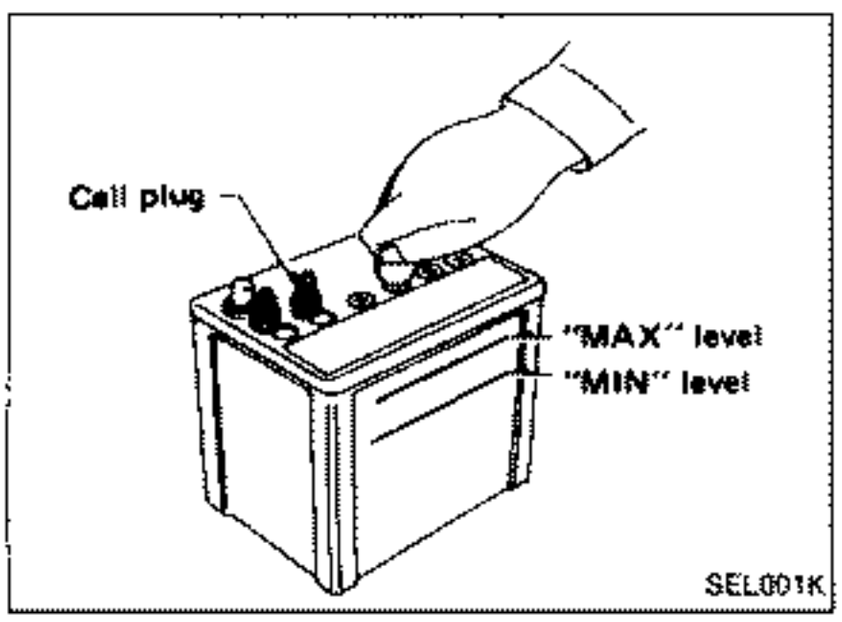

- Remove the cell plug using a suitable tool.
- Add distilled water up to the MAX level.

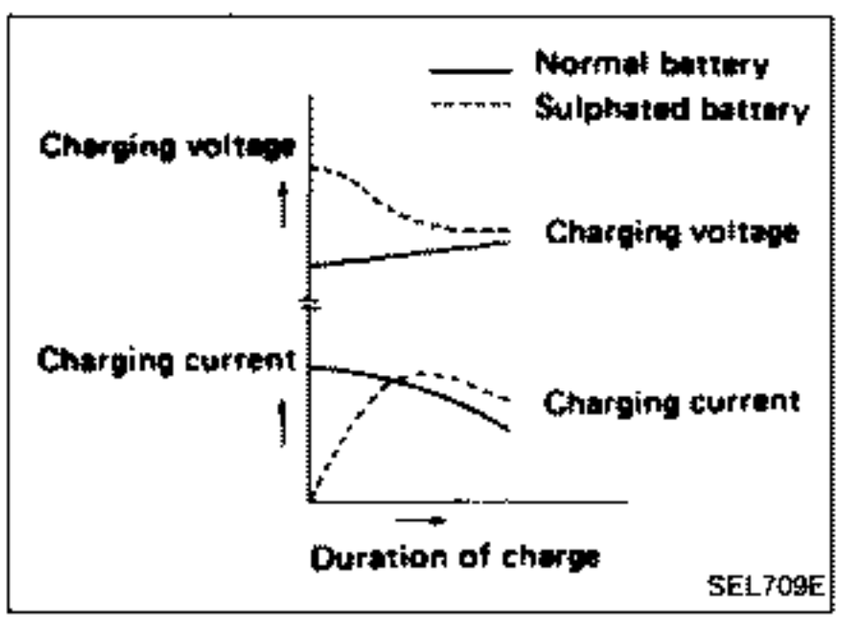

SULPHATION

When a battery has been left unattended for a long period of time and has a specific gravity of less than 1.100, it will be completely discharged, resulting in sulphation on the cell plates.

Compared with a battery discharged under normal conditions, the current flow in a "sulphated" battery is not as smooth although its voltage is high during the initial stage of charging, as shown in the figure at the left.

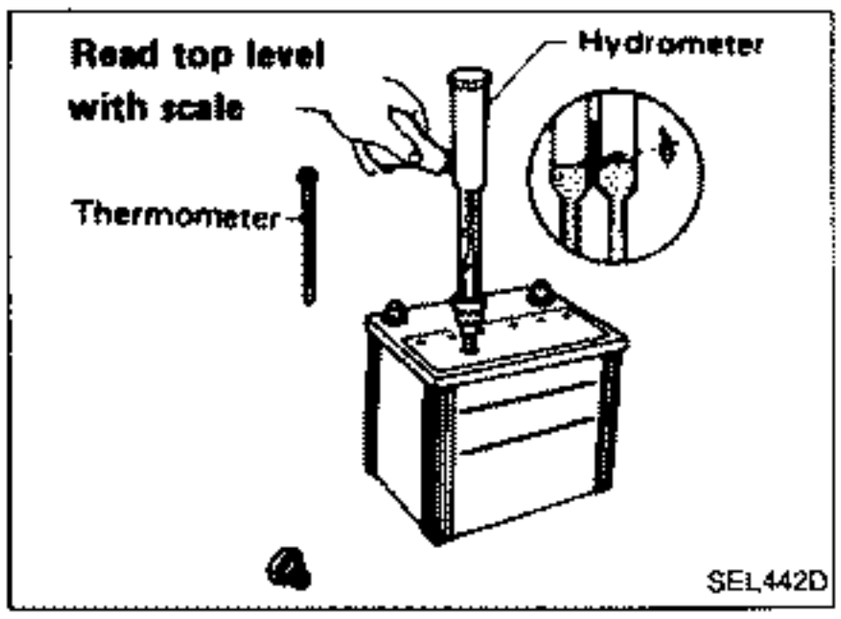

SPECIFIC GRAVITY CHECK

1. Read hydrometer and thermometer indications at eye level.

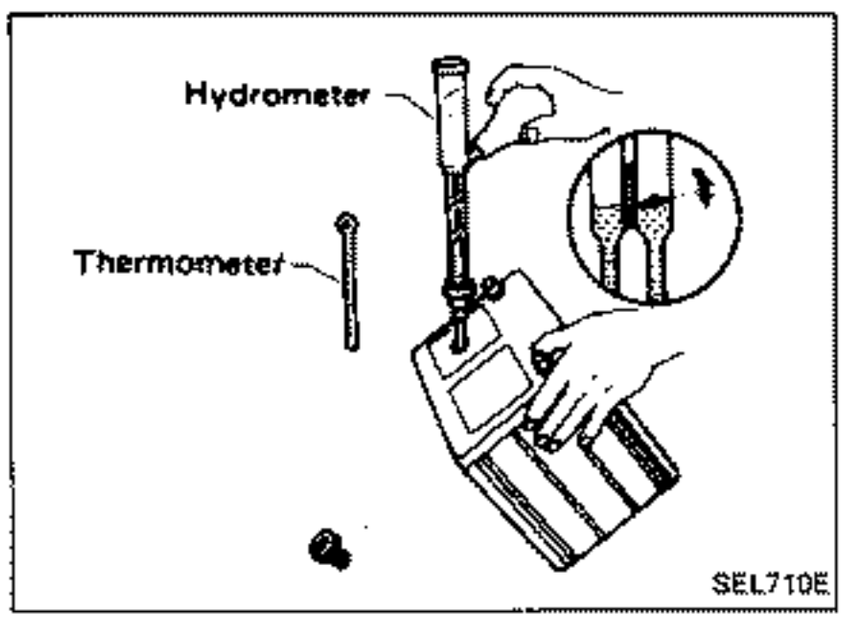

- When electrolyte level is too low, tilt battery case to raise it for easy measurement.

2. Convert into specific gravity at 20°C (68°F).

Example:

- When electrolyte temperature is 35°C (95°F) and specific gravity of electrolyte is 1.230, converted specific gravity at 20°C (68°F) is 1.240.
- When electrolyte temperature is 0°C (32°F) and specific gravity of electrolyte is 1.210, converted specific gravity at 20°C (68°F) is 1.196.

Z.ONE.DATSUN

How to Handle Battery (Cont'd)

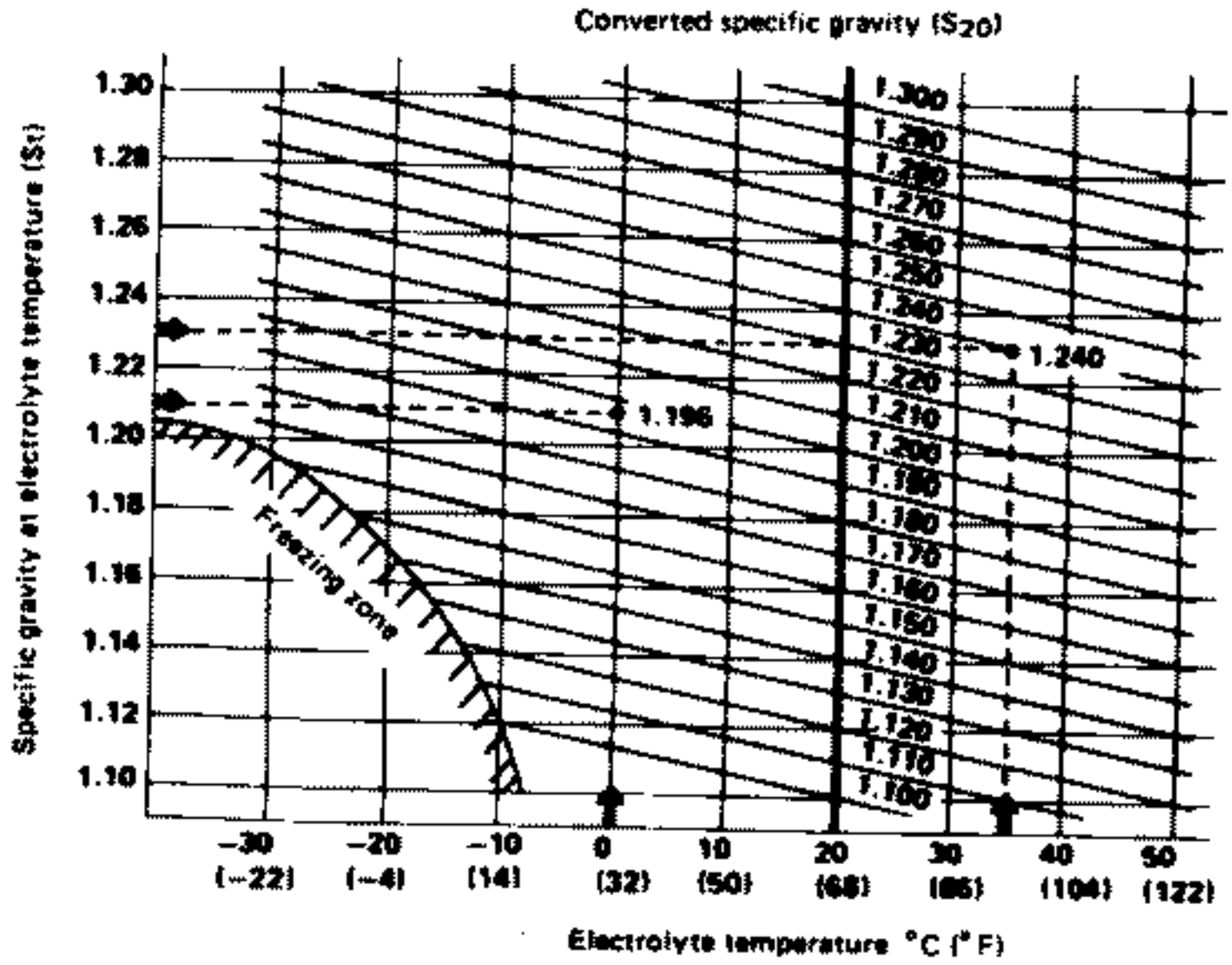

SEL042D

Battery Test and Charging Chart

Chart I

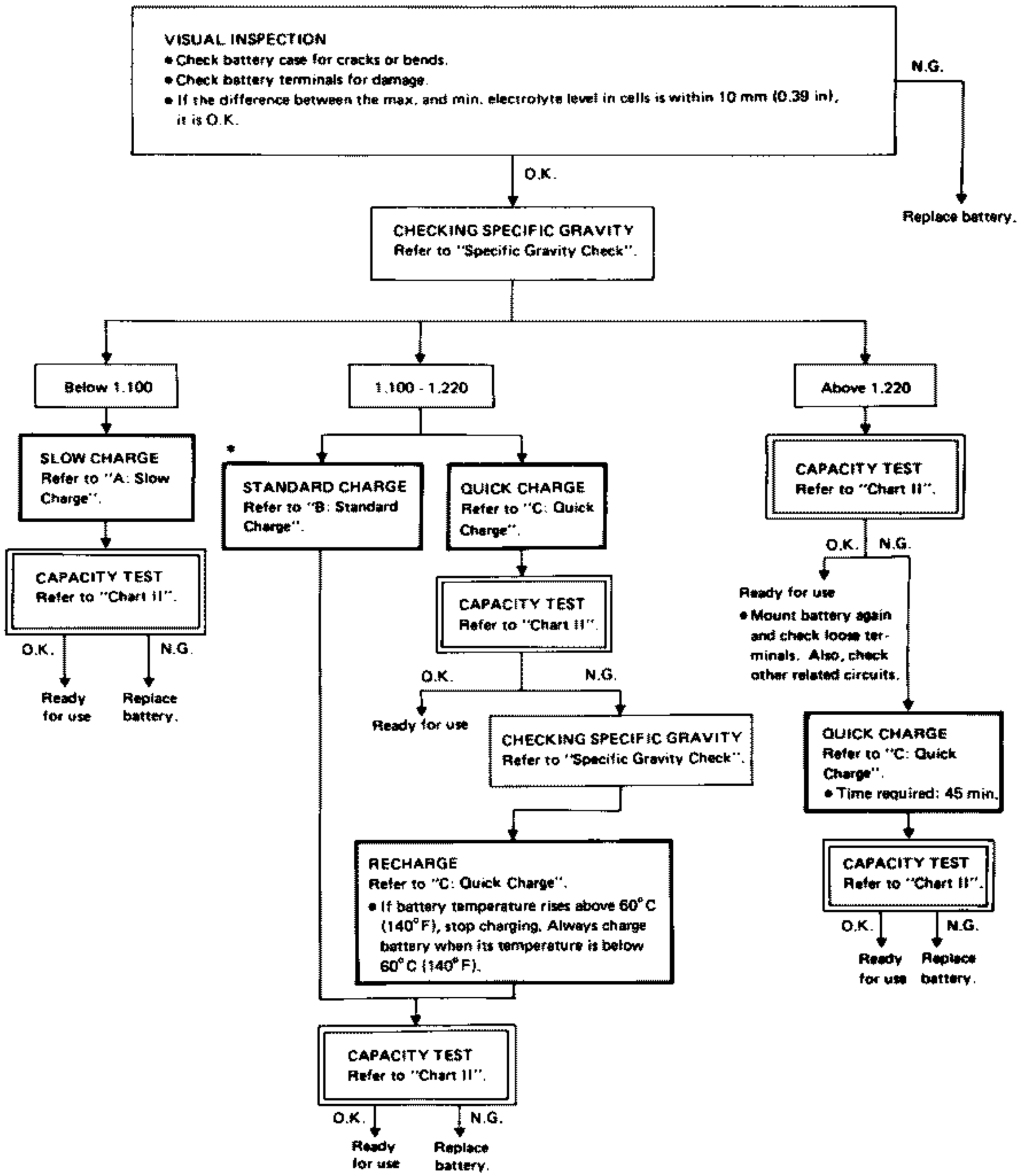

* "STANDARD CHARGE" is recommended in case that the vehicle is in storage after charging.

Battery Test and Charging Chart (Cont'd)

Chart II

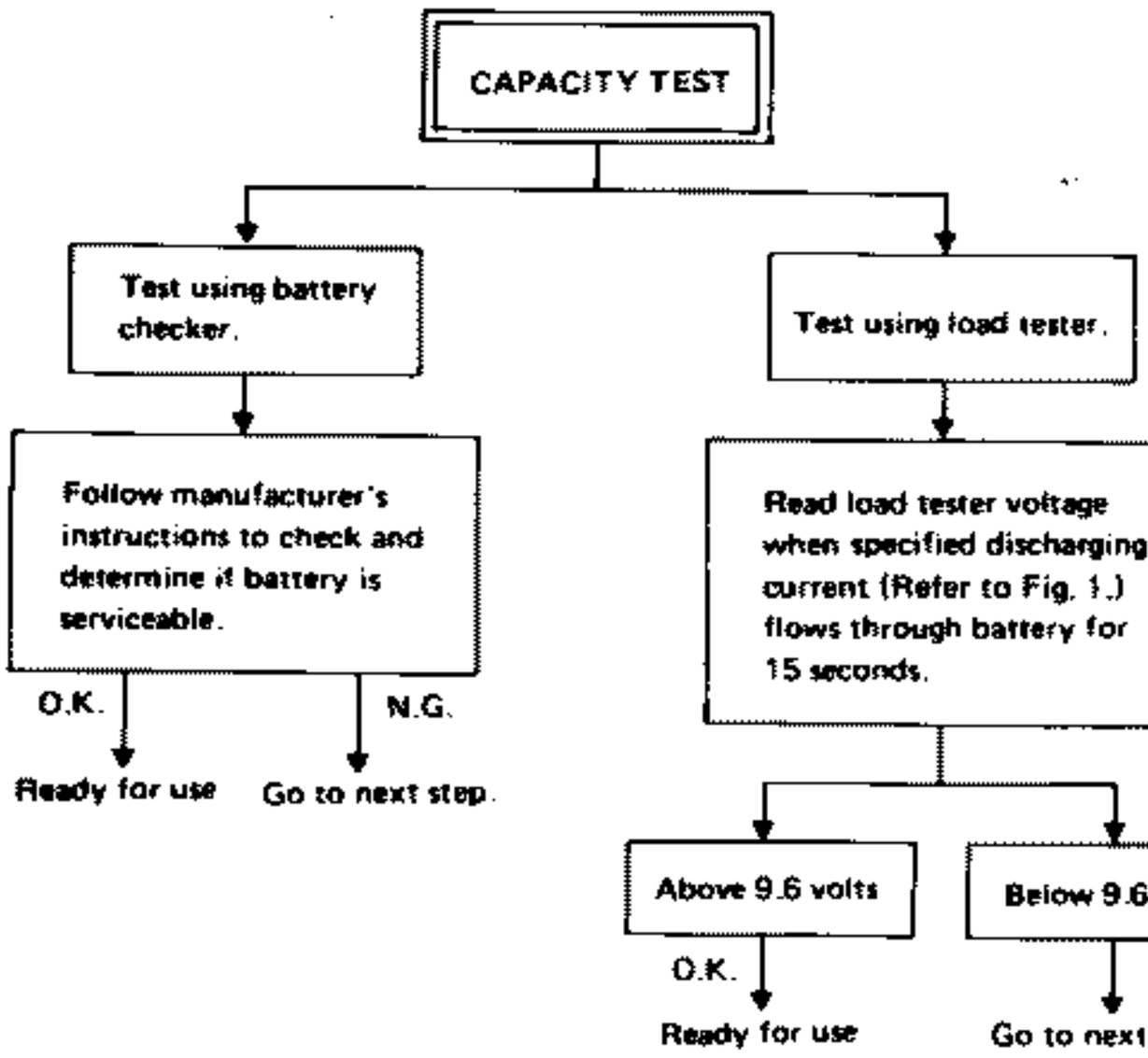

- Check battery type and determine the specified current using the following table.

Fig. 1 DISCHARGING CURRENT (Load tester)

Type	Current (A)
28B19R(L)	90
34B19R(L)	99
46B24R(L)	135
55B24R(L)	135
50D23R(L)	150
55D23R(L)	180
65D26R(L)	195
80D26R(L)	195
75D31R(L)	210
95D31R(L)	240
95E41R(L)	300
130E41R(L)	330

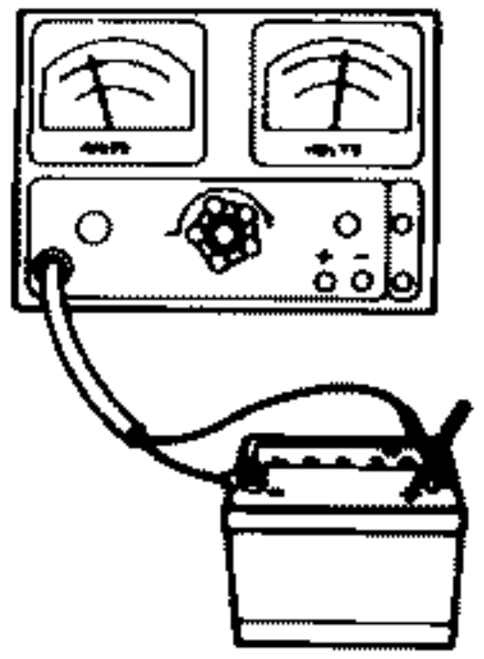

SEL697B

Battery Test and Charging Chart (Cont'd)

A: SLOW CHARGE

Determine initial charging current from specific gravity referring to Fig. 2.

- Charge battery.
- Check charging voltage 30 minutes after starting the battery charge.

12 to 15 volts → O.K. → Continue to charge for 12 hours.

Below 12 volts or above 15 volts → N.G. → Replace battery.

CHECKING SPECIFIC GRAVITY
Refer to "Specific Gravity Check".

Conduct additional charge as per Fig 3, if necessary.

Go to "CAPACITY TEST".

Fig. 2 INITIAL CHARGING CURRENT SETTING (Slow charge)

BATTERY TYPE / CONVERTED SPECIFIC GRAVITY	28B19R(L) 34B19R(L)	46B24R(L) 55B24R(L)	50D23R(L) 55D23R(L)	65D26R(L) 80D26R(L)	75D31R(L)	95D31R(L) 95E41R(L)	130E41R(L)
Below 1.100	4.0 (A)	5.0 (A)	7.0 (A)	8.0 (A)	9.0 (A)	10.0 (A)	14.0 (A)

- Check battery type and determine the specified current using the table shown above.
- After starting charging, adjustment of charging current is not necessary.

Fig. 3 ADDITIONAL CHARGE (Slow charge)

- Below 1.150 → Charge for 5 hours at initial charging current setting.
- 1.150 - 1.200 → Charge for 4 hours at initial charging current setting.
- 1.200 - 1.240 → Charge for 2 hours at initial charging current setting.
- Above 1.240

→ Go to "CAPACITY TEST".

CAUTION:

a. Set charging current to value specified in Fig. 2. If charger is not capable of producing specified current value, set its charging current as close to that value as possible.
b. Keep battery away from open flame while it is being charged.
c. When connecting charger, connect leads first, then turn on charger. Do not turn on charger first, as this may cause a spark.
d. If battery temperature rises above 60°C (140°F), stop charging. Always charge battery when its temperature is below 60°C (140°F).

Battery Test and Charging Chart (Cont'd)

B: STANDARD CHARGE

Determine initial charging current from specific gravity, referring to Fig. 4.

↓

Charge battery for 8 hours.

↓

CHECKING SPECIFIC GRAVITY
Refer to "Specific Gravity Check".

↓

Conduct additional charge as per Fig. 5, if necessary.

↓

Go to "CAPACITY TEST".

Fig. 4 INITIAL CHARGING CURRENT SETTING
(Standard charge)

BATTERY TYPE / CONVERTED SPECIFIC GRAVITY	28B19R(L) 34B19R(L)	46B24R(L) 55B24R(L)	50D23R(L) 55D23R(L)	65D26R(L) 80D26R(L)	75D31R(L)	95D31R(L) 95E41R(L)	130E41R(L)
1.100 - 1.130	4.0 (A)	5.0 (A)	6.0 (A)	7.0 (A)	8.0 (A)	9.0 (A)	13.0 (A)
1.130 - 1.160	3.0 (A)	4.0 (A)	5.0 (A)	6.0 (A)	7.0 (A)	8.0 (A)	11.0 (A)
1.160 - 1.190	2.0 (A)	3.0 (A)	4.0 (A)	5.0 (A)	6.0 (A)	7.0 (A)	9.0 (A)
1.190 - 1.220	2.0 (A)	2.0 (A)	3.0 (A)	4.0 (A)	5.0 (A)	5.0 (A)	7.0 (A)

- Check battery type and determine the specified current using the table shown above.
- After starting charging, adjustment of charging current is not necessary.

Fig. 5 ADDITIONAL CHARGE (Standard charge)

Below 1.150 | 1.150 - 1.200 | 1.200 - 1.240 | Above 1.240

↓

Charge for 3.5 hours at initial charging current setting. | Charge for 2.5 hours at initial charging current setting. | Charge for 1.5 hours at initial charging current setting.

↓

Go to "CAPACITY TEST".

CAUTION:

a. Do not use standard charge method on a battery whose specific gravity is less than 1.100.

b. Set charging current to value specified in Fig. 4. If charger is not capable of producing specified current value, set its charging current as close to that value as possible.

c. Keep battery away from open flame while it is being charged.

d. When connecting charger, connect leads first, then turn on charger. Do not turn on charger first, as this may cause a spark.

e. If battery temperature rises above 60°C (140°F), stop charging. Always charge battery when its temperature is below 60°C (140°F).

Battery Test and Charging Chart (Cont'd)

C: QUICK CHARGE

Determine initial charging current setting and charging time from specific gravity, referring to Fig. 6.

↓

Charge battery

↓

Go to "CAPACITY TEST".

Fig. 6 INITIAL CHARGING CURRENT SETTING AND CHARGING TIME (Quick charge)

BATTERY TYPE / CURRENT (A) / CONVERTED SPECIFIC GRAVITY	28B19R(L) 34B19R(L)	46B24R(L) 55B24R(L) 50D23R(L)	55D23R(L) 65D26R(L) 80D26R(L)	75D31R(L) 95D31R(L) 95E41R(L)	130E41R(L)
	10 (A)	15 (A)	20 (A)	30 (A)	40 (A)
1.100 - 1.130	2.5 hours				
1.130 - 1.160	2.0 hours				
1.160 - 1.190	1.5 hours				
1.190 - 1.220	1.0 hours				
Above 1.220	0.75 hours (45 min.)				

- Check battery type and determine the specified current using the table shown above.
- After starting charging, adjustment of charging current is not necessary.

CAUTION:

a. Do not use quick charge method on a battery whose specific gravity is less than 1.100.

b. Set initial charging current to value specified in Fig. 6. If charger is not capable of producing specified current value, set its charging current as close to that value as possible.

c. Keep battery away from open flame while it is being charged.

d. When connecting charger, connect leads first, then turn on charger. Do not turn on charger first, as this may cause a spark.

e. Be careful of a rise in battery temperature because a large current flow is required during quick-charge operation.

If battery temperature rises above 60°C (140°F), stop charging. Always charge battery when its temperature is below 60°C (140°F).

f. Do not exceed the charging time specified in Fig. 6, because charging battery over the charging time can cause deterioration of the battery.

Service Data and Specifications (S.D.S.)

	Australia	Europe	
Applied model	All	M/T	A/T
Type	55D23L	65D26L	80D26L
Capacity V-AH	12-60	12-65	

Wiring Diagram

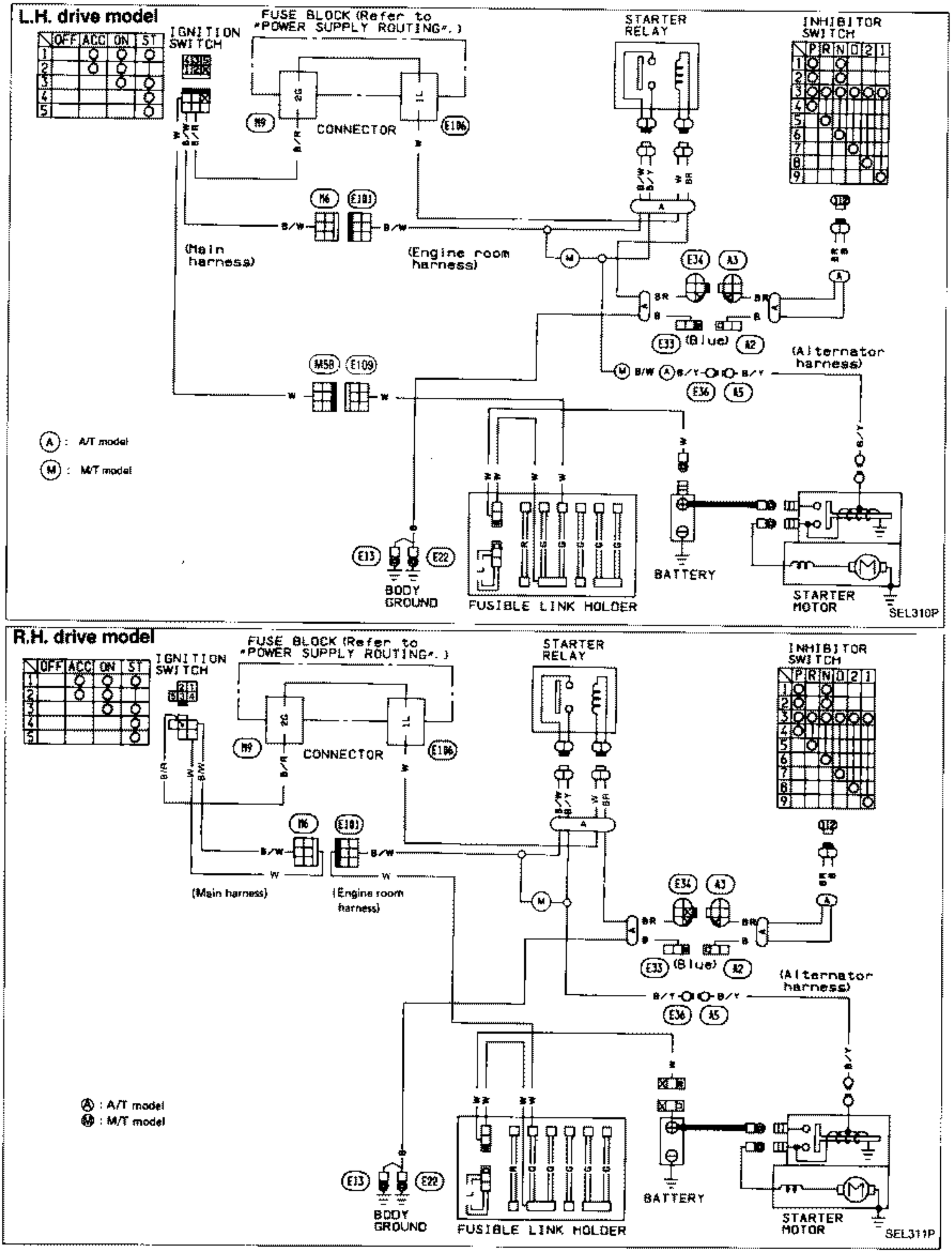

Engine does not start.

Does engine turn by cranking?

No → Does starter motor turn?

No → Check fuse and fusible link. N.G. → Replace.

O.K. → Check battery for charging condition and battery terminals for connections and corrosion. N.G. → *1
- Charge or replace battery.
- Repair connections and corrosion of battery terminals.

O.K. → Check starting system wiring. N.G. → Repair wiring or replace electrical units.
- Ignition switch
- Inhibitor switch
- Starter relay
- Connections

O.K. → Can You hear magnetic switch of starter motor operating? No
- Repair or replace magnetic switch.

Yes → Is meshing condition of pinion and ring gear O.K.? N.G.
- Adjust dimension ℓ.
- Check shift lever for deformation, return spring for fatigue and pinion for sliding condition.
- Correct meshing condition of pinion and ring gear. Replace if necessary.

O.K. → Remove starter motor from engine. Does starter motor turn under no load by connecting battery ⊕ terminal to M terminal of starter motor and battery ⊖ terminal to starter motor body? No
- Check armature assembly, field coil, and brush. Replace if necessary.

Yes → Check magnetic switch contacts. Replace if necessary.

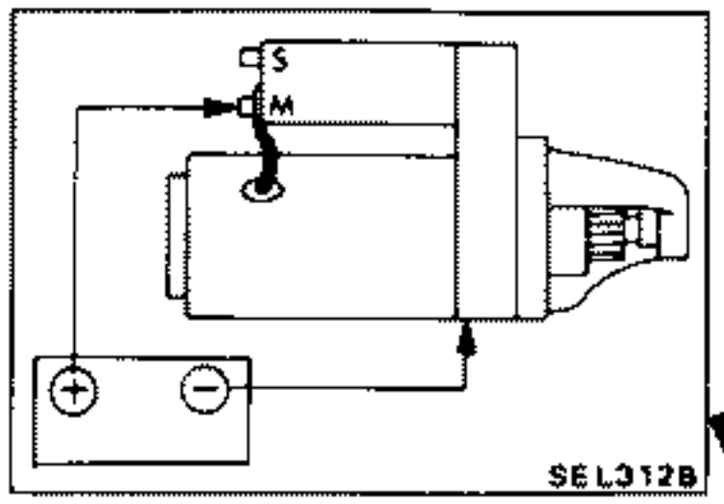

Yes → Check pinion roller clutch for damage. Replace if necessary.

No → Check reduction gear, armature and gear shaft for damage. Replace if necessary.

Does gear shaft turn? Yes

No → Does engine turn normally? N.G. (Turns slowly.)

O.K. → Check ignition system and fuel system.

Check battery for charging condition and battery terminals for connections and corrosion. N.G. → *1

O.K. → Repair or replace starter motor.

Starter motor does not stop if ignition switch is turned off. → Repair or replace ignition switch, starter relay or magnetic switch.

Check item. / Problem or corrective action

If any abnormality is found, immediately disconnect battery negative terminal.

Construction

M2T25281

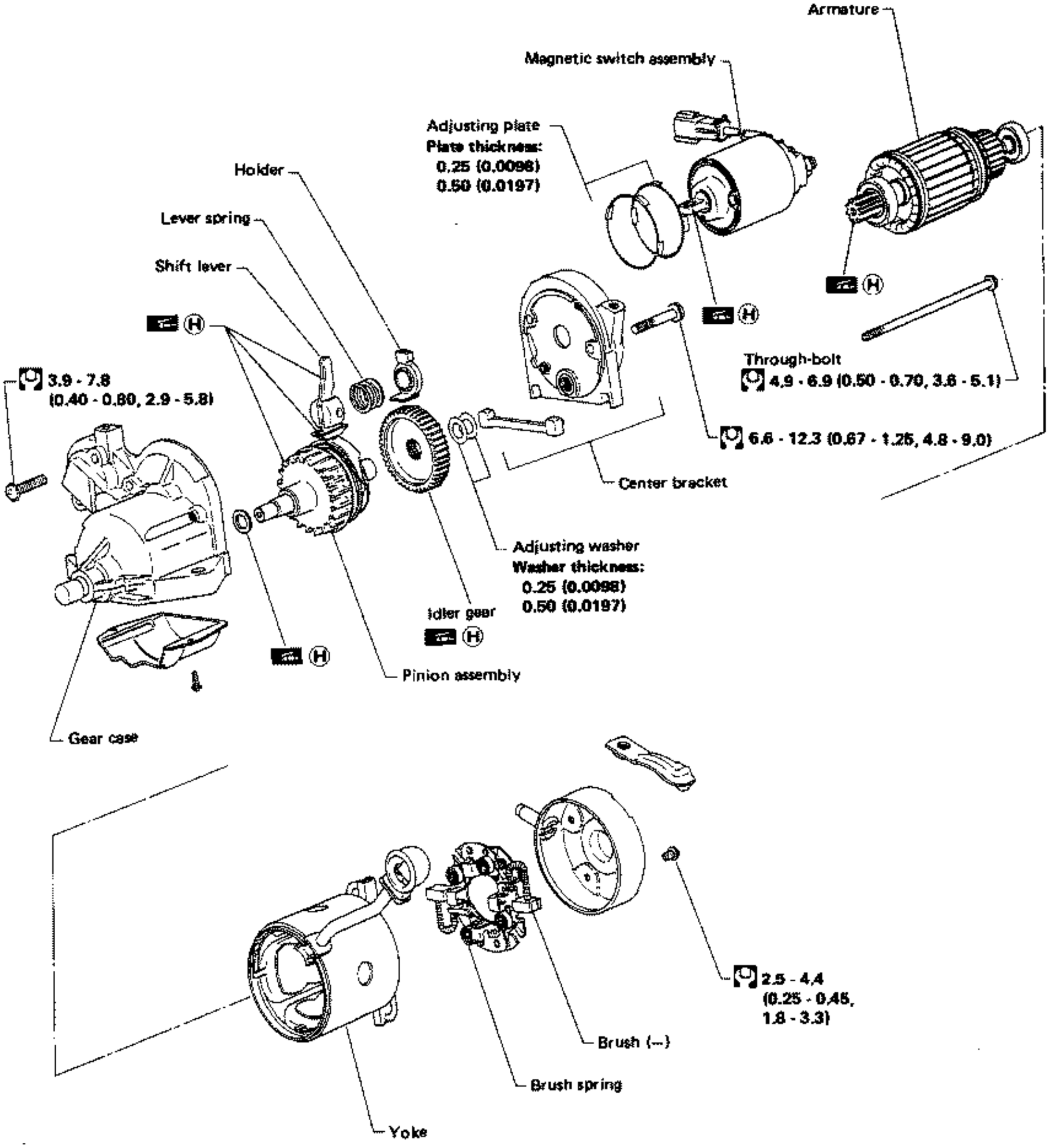

Unit: mm (in)
: N·m (kg-m, ft-lb)
GS (H) : High-temperature grease point

SEL038N

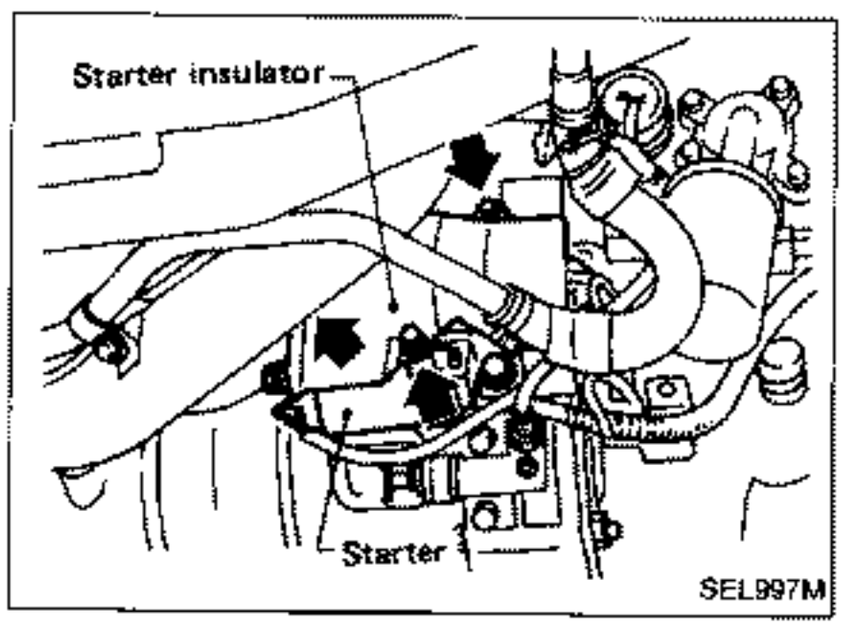

Removal and Installation

REMOVAL

1. Remove starter insulator.
2. Remove starter harness connector and cable.
3. Remove starter fixing bolt and nut and remove starter.

INSTALLATION

- Installation procedure is in reverse order of removal.

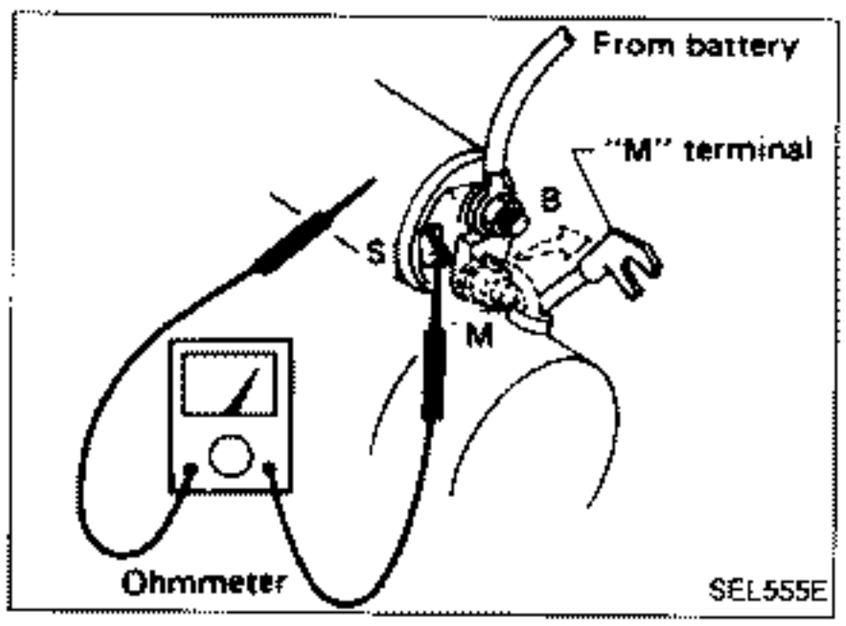

Magnetic Switch Check

- Before starting to check, disconnect battery ground cable.
- Disconnect "M" terminal of starter motor.

1. Continuity test (between "S" terminal and switch body).

- No continuity ... Replace.

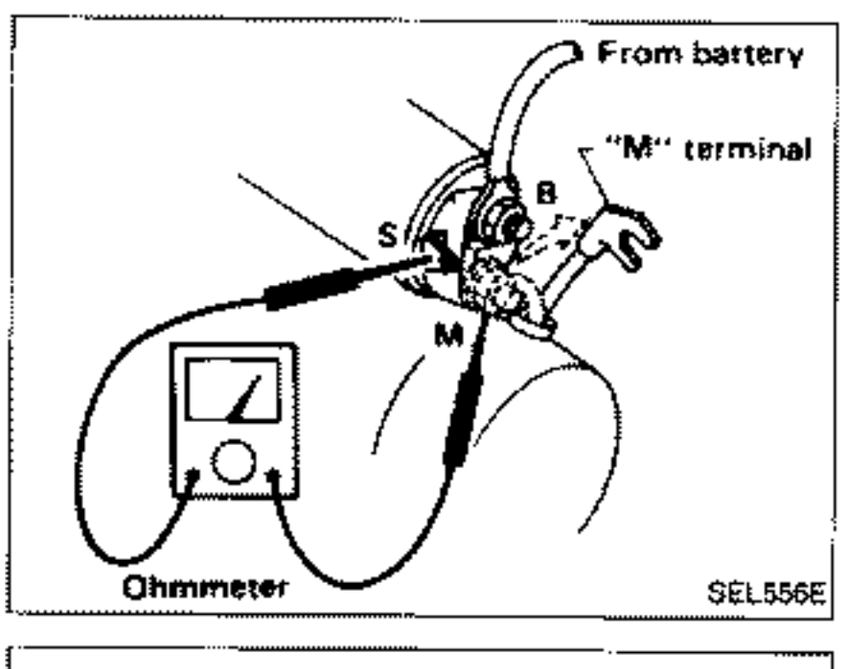

2. Continuity test (between "S" terminal and "M" terminal).

- No continuity ... Replace.

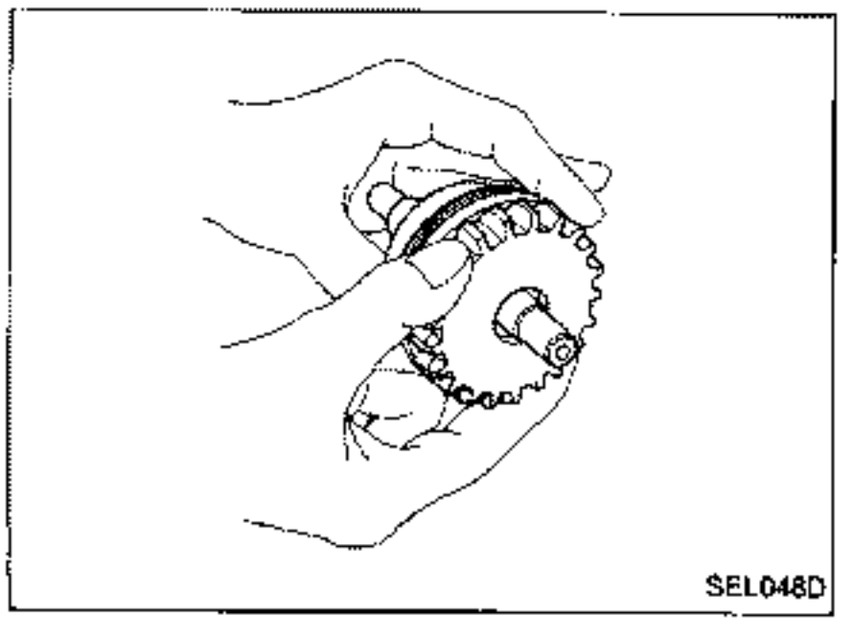

Pinion/Clutch Check

1. Inspect pinion teeth.

- Replace pinion if teeth are worn or damaged. (Also check condition of ring gear teeth.)

2. Check to see if pinion locks in one direction and rotates smoothly in the opposite direction.

- If it does not lock (or locks) in either direction or unusual resistance is evident ... Replace.

3. Inspect reduction gear teeth.

- Replace reduction gear if teeth are worn or damaged. (Also check condition of armature shaft gear teeth.)

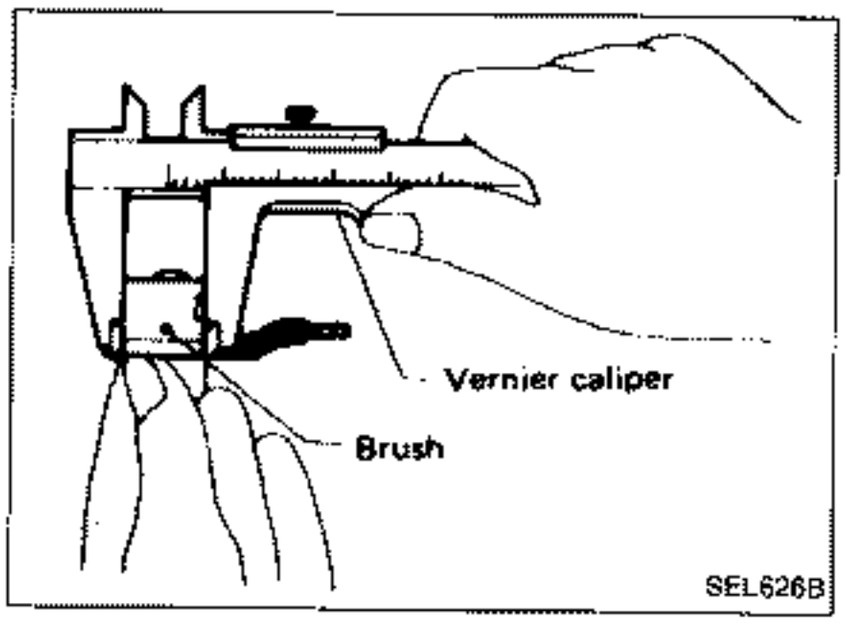

Brush Check

BRUSH

Check brush for wear.

Wear limit length:
Refer to S.D.S.

- Excessive wear ... Replace.

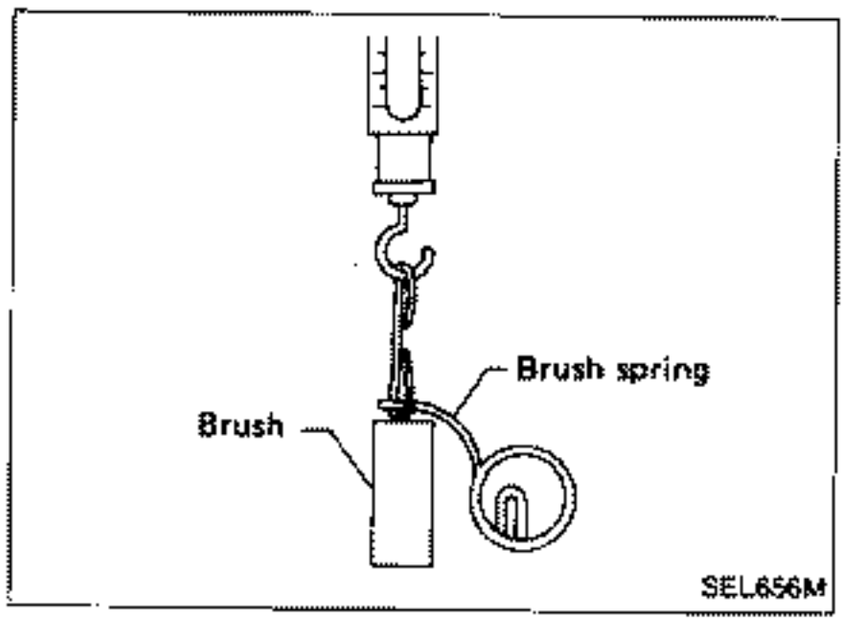

BRUSH SPRING PRESSURE

Check brush spring pressure with brush spring detached from brush.

Spring pressure (with new brush):
Refer to S.D.S.

- Not within the specified values ... Replace.

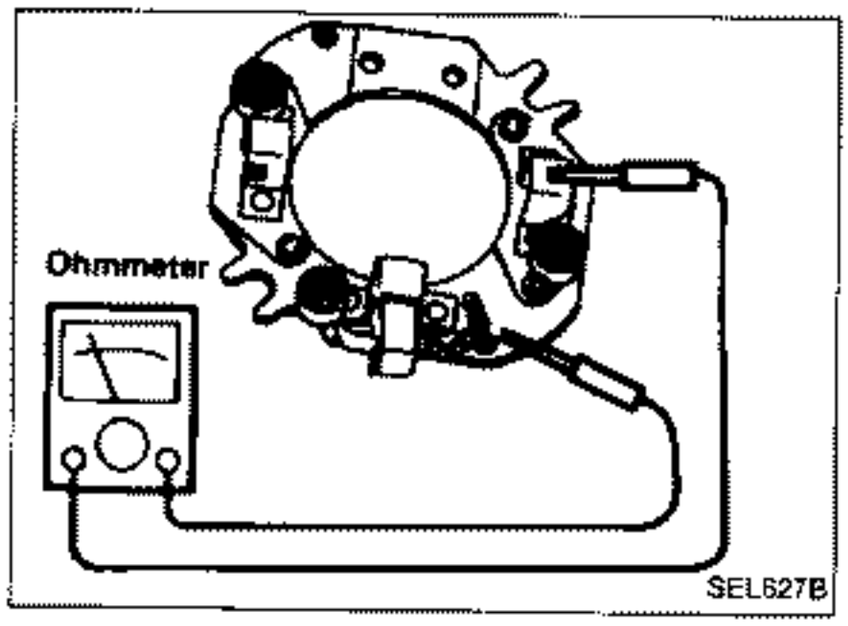

BRUSH HOLDER

1. Perform insulation test between brush holder (positive side) and its base (negative side).
- Continuity exists .... Replace.
2. Check brushes to see if they move smoothly.
- If brush holder is bent, replace it; if surfaces of brush holder and base are dirty, clean them.

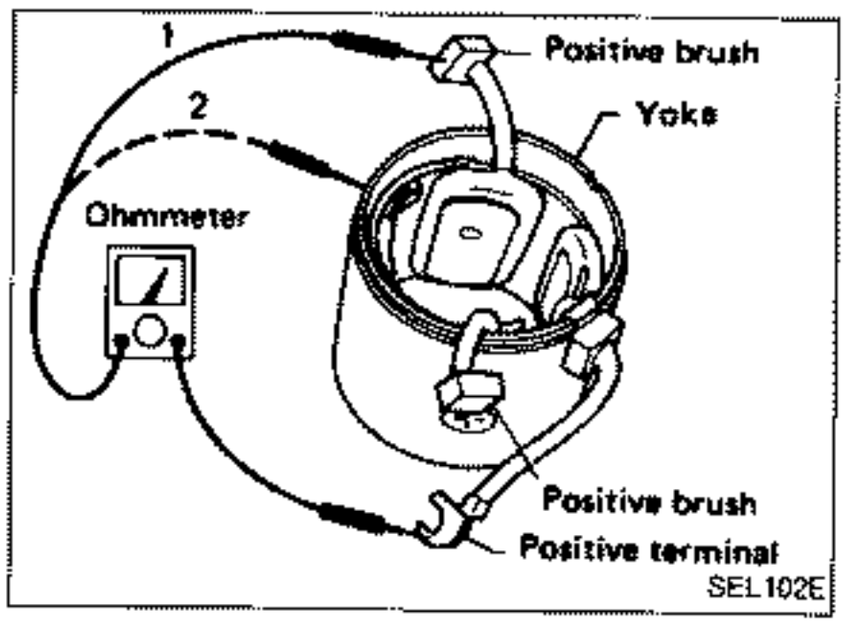

Field Coil Check

1. Continuity test (between field coil positive terminal and positive brushes).
- No continuity ... Replace yoke.
2. Insulation test (between field coil positive terminal and yoke).
- Continuity exists .... Replace yoke.

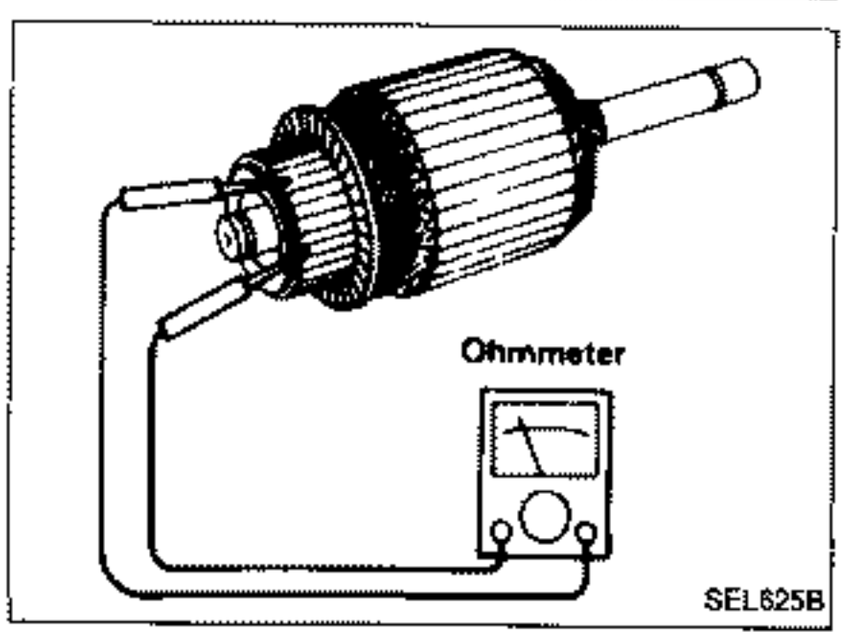

Armature Check

1. Continuity test (between two segments side by side).
- No continuity ... Replace.

Armature Check (Cont'd)

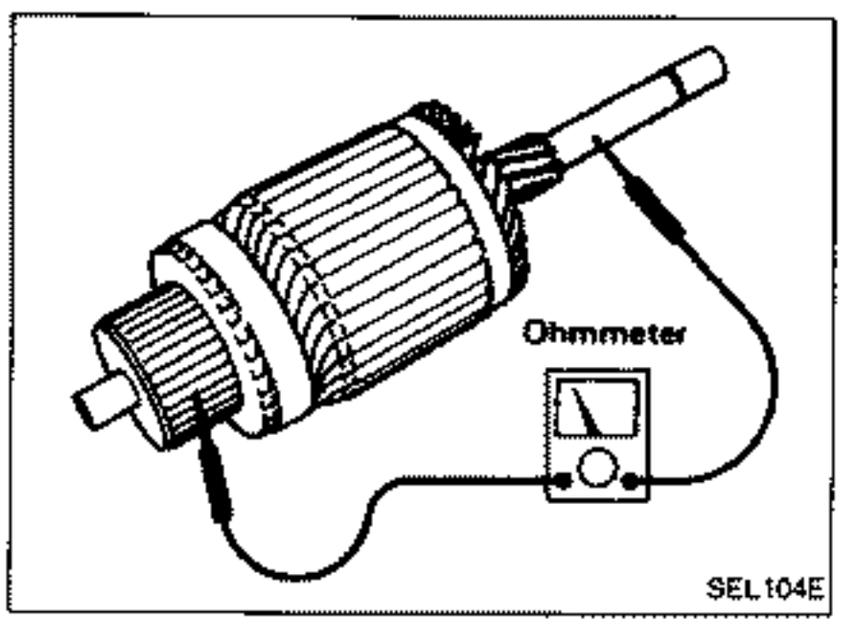

2. Insulation test (between each commutator bar and shaft).
- Continuity exists .... Replace.

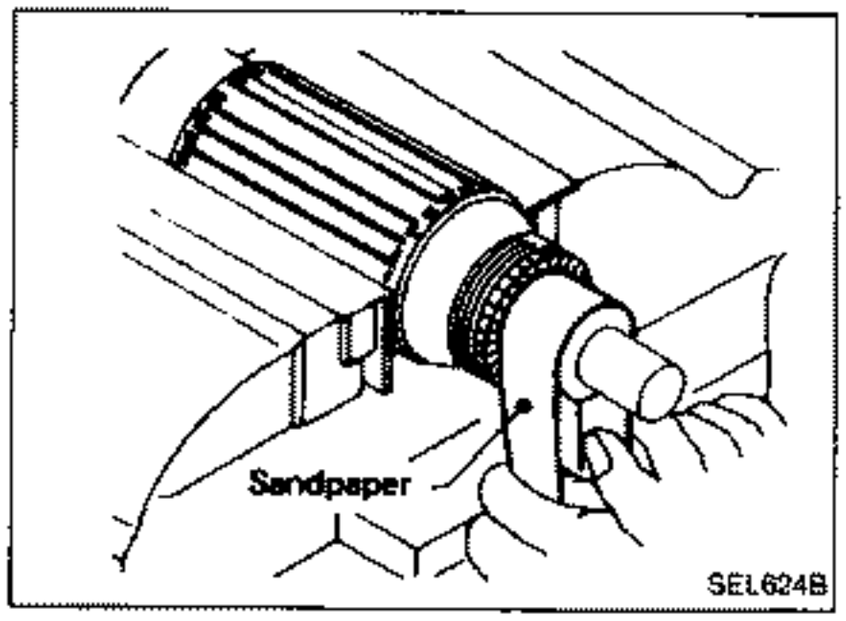

3. Check commutator surface.
- Rough ... Sand lightly with No. 500 - 600 sandpaper.

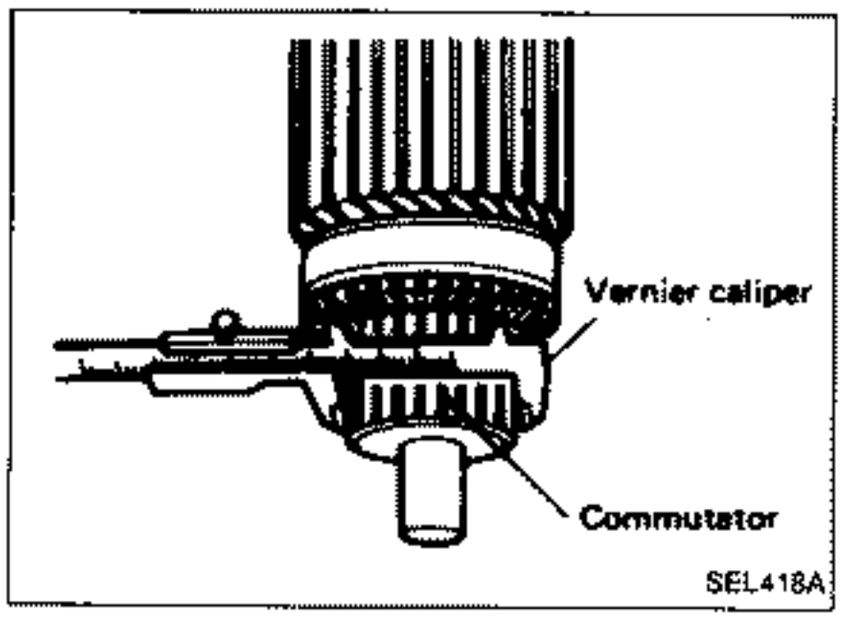

4. Check diameter of commutator.
   Commutator minimum diameter:
   Refer to S.D.S.
- Less than specified value ... Replace.

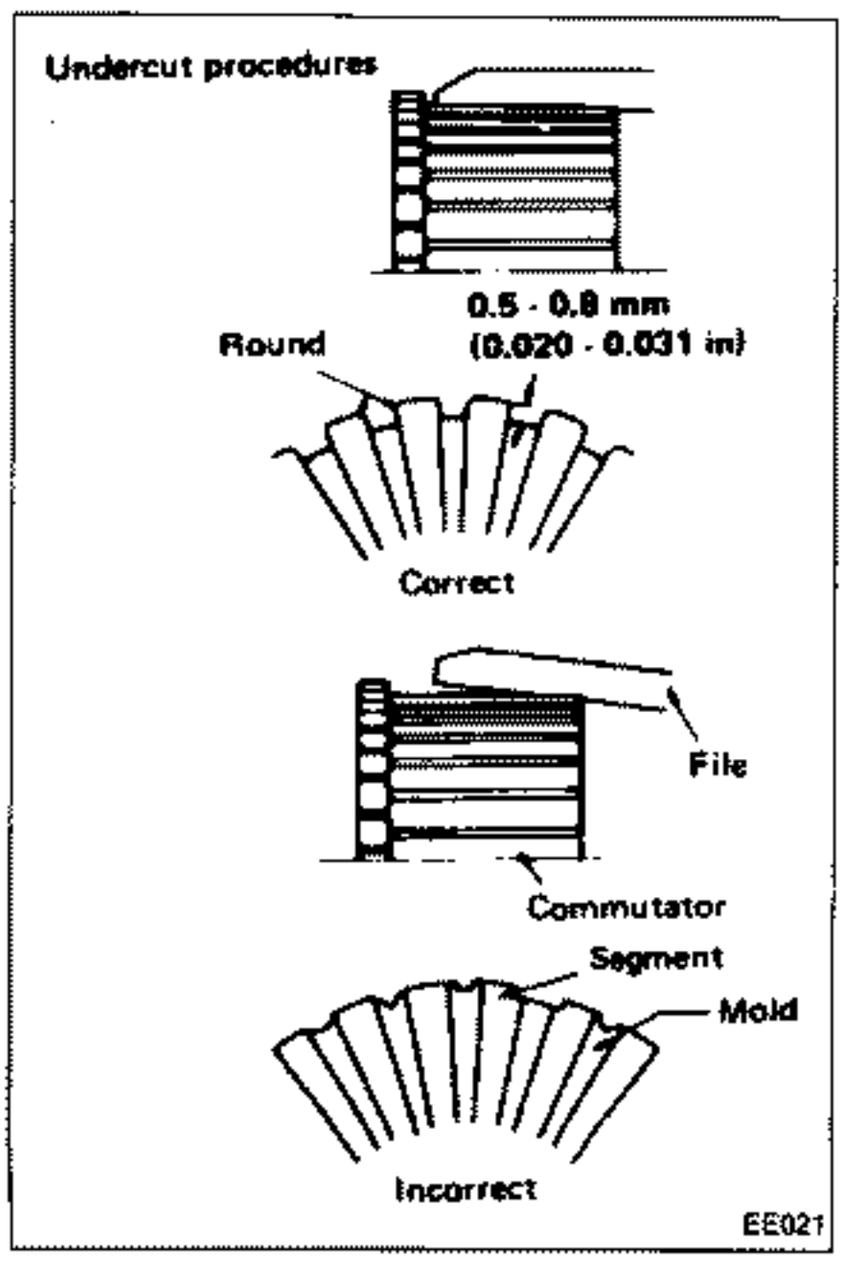

5. Check depth of insulating mold from commutator surface.
- Less than 0.2 mm (0.008 in) ... Undercut to 0.5 to 0.8 mm (0.020 to0.031 in)

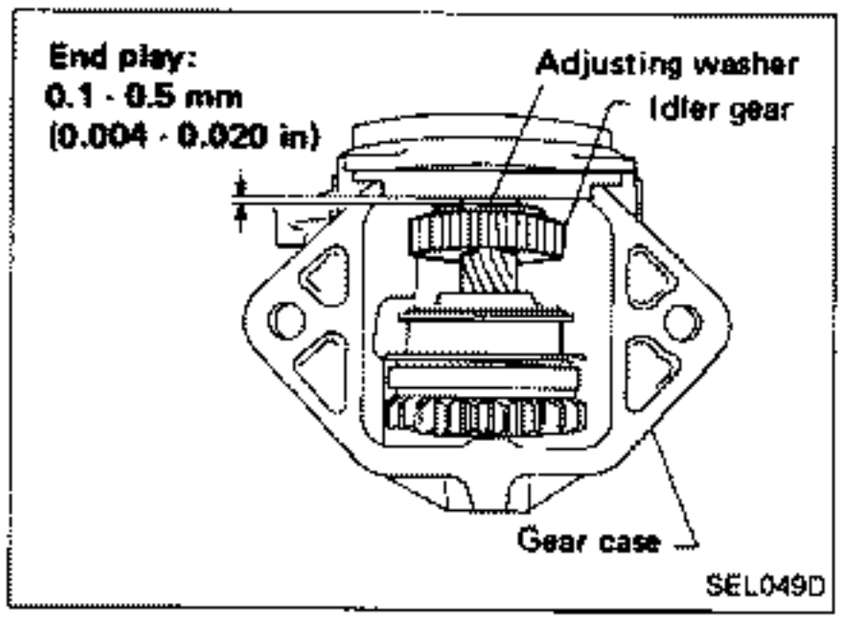

Reassembly

Carefully observe the following instructions.

a. **Apply grease to:**
   - Rear cover metal
   - Gear case metal
   - Frictional surface of pinion
   - Moving portion of shift lever
   - Plunger of magnetic switch

b. **After assembling gear case, pinion assembly, idler gear, adjusting washers and center bracket, turn idler gear with your hand in axial direction and adjust end play to the 0.1 to 0.5 mm (0.004 to 0.020 in) range using adjusting washer(s).**

c. **Check pinion to see if its engagement length is correct.**

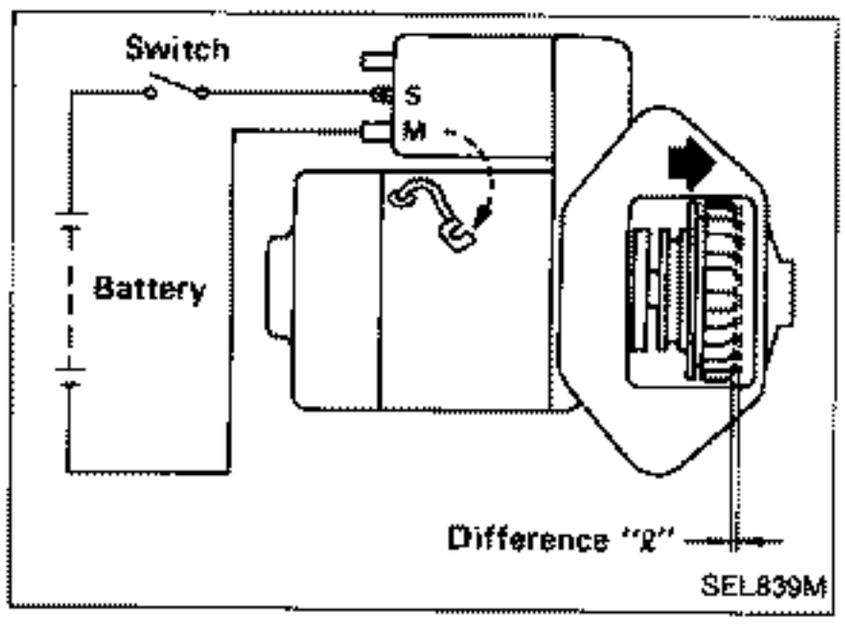

Measure difference in height "ℓ" of pinion assembly front edge when pinion assembly is forced out by the magnetic switch and then when it is pulled out by hand.

Difference "ℓ": 0.3 - 2.0 mm (0.012 - 0.079 in)

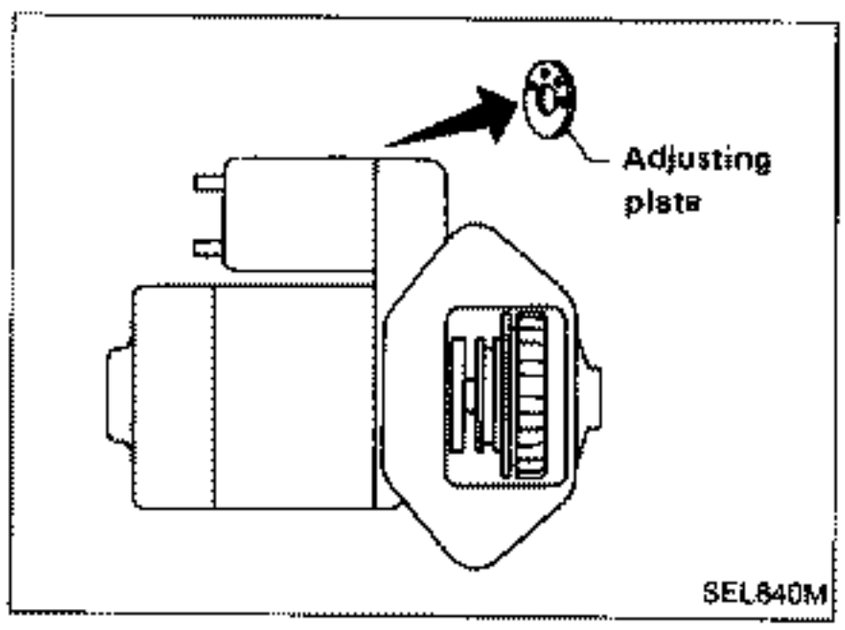

- Not in the specified value ... Adjust by adjusting plate.

Service Data and Specifications (S.D.S.)

STARTER

Type			M2T25281
			Reduction gear
System voltage		V	12
No-load	Terminal voltage	V	11.0
	Current	A	70
	Revolution	rpm	More than 2,000
Minimum length of brush		mm (in)	11.5 (0.453)
Brush spring tension (With new brush)		N (kg, lb)	13.7 - 25.5 (1.4 - 2.6, 3.1 - 5.7)
Minimum diameter of commutator		mm (in)	31.4 (1.236)
Difference "ℓ" in height of pinion assembly		mm (in)	0.3 - 2.0 (0.012 - 0.079)

Wiring Diagram

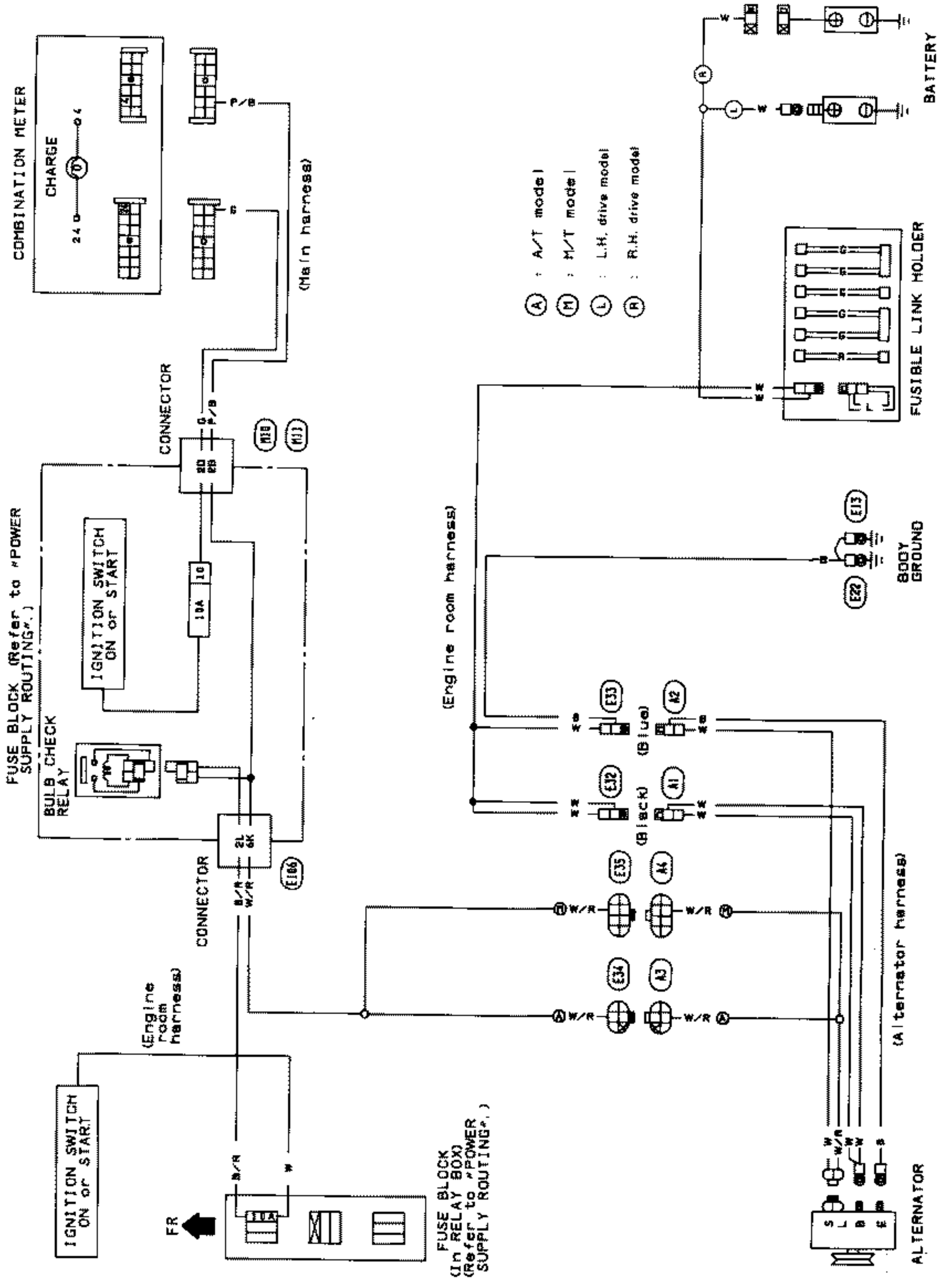

SEL312P

Trouble-shooting

Before conducting an alternator test, make sure that the battery is fully charged. A 30-volt voltmeter and suitable test probes are necessary for the test. The alternator can be checked easily by referring to the Inspection Table.

Before starting trouble-shooting, inspect the fusible link.

WITH IC REGULATOR

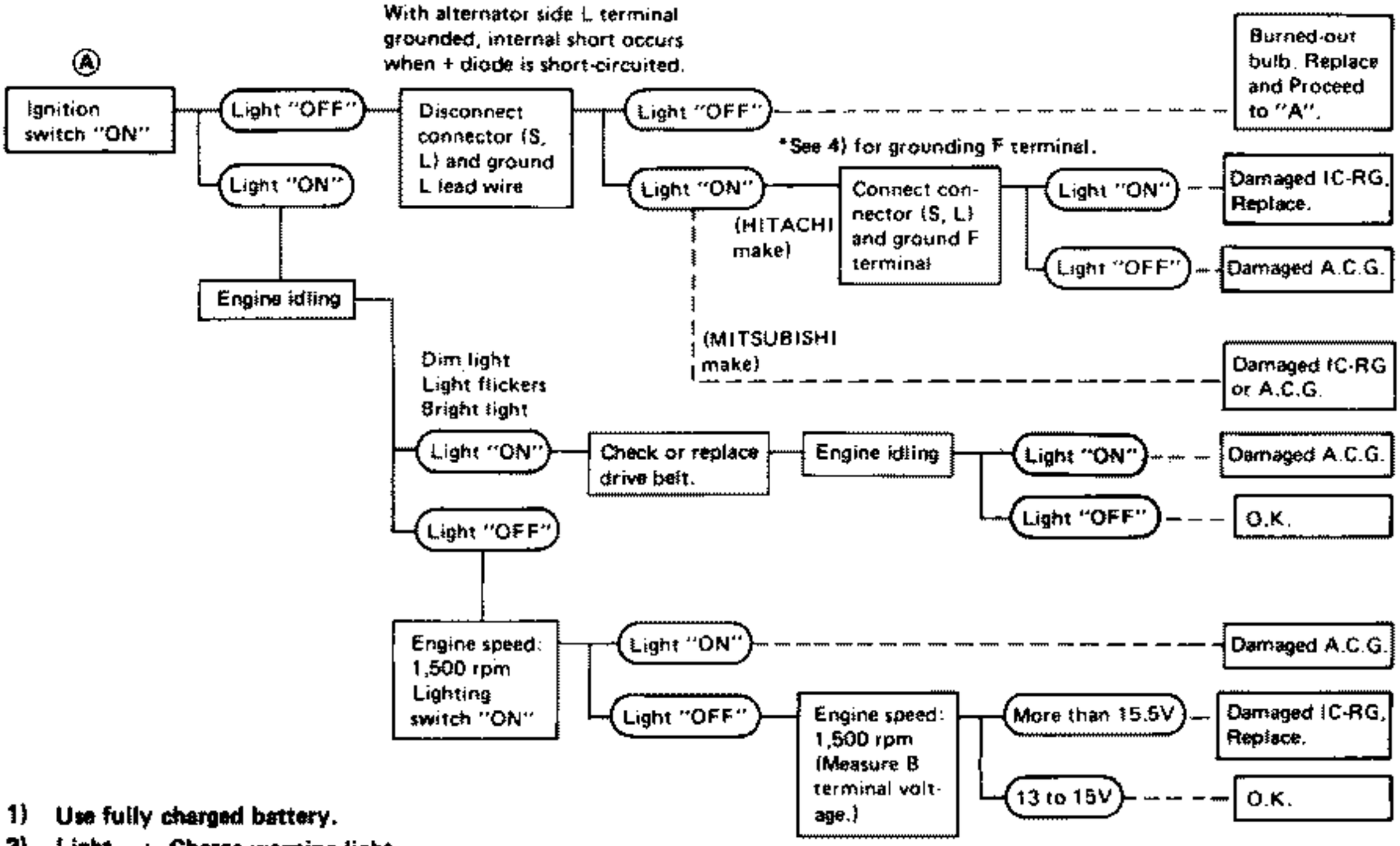

1) **Use fully charged battery.**
2) **Light : Charge warning light**
   A.C.G. : Alternator parts except IC regulator
   IC-RG : IC regulator
   O.K. : IC alternator is in good condition.
3) **When reaching "Damaged A.C.G.", remove alternator from vehicle and disassemble, inspect and correct or replace faulty parts.**
4) ***Method of grounding F terminal (HITACHI make only)**

Gasoline engine model

Contact tip of wire with brush and attach wire to alternator body.

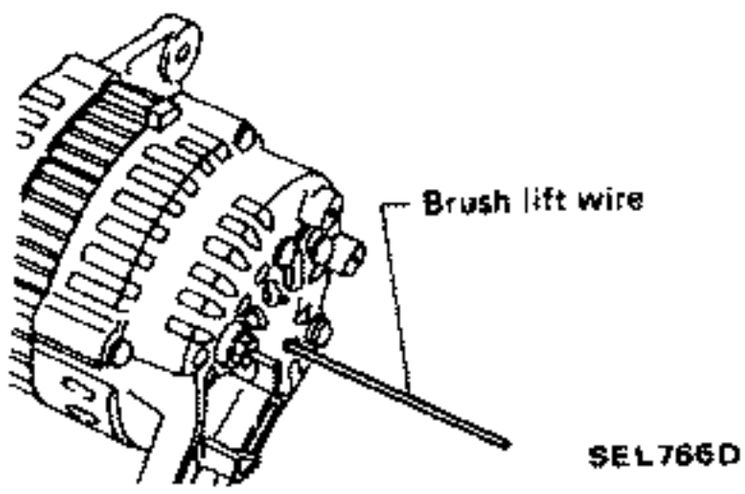

5) **Terminals "S", "L", "B" and "E" are marked on rear cover of alternator.**

Construction

LR180-724

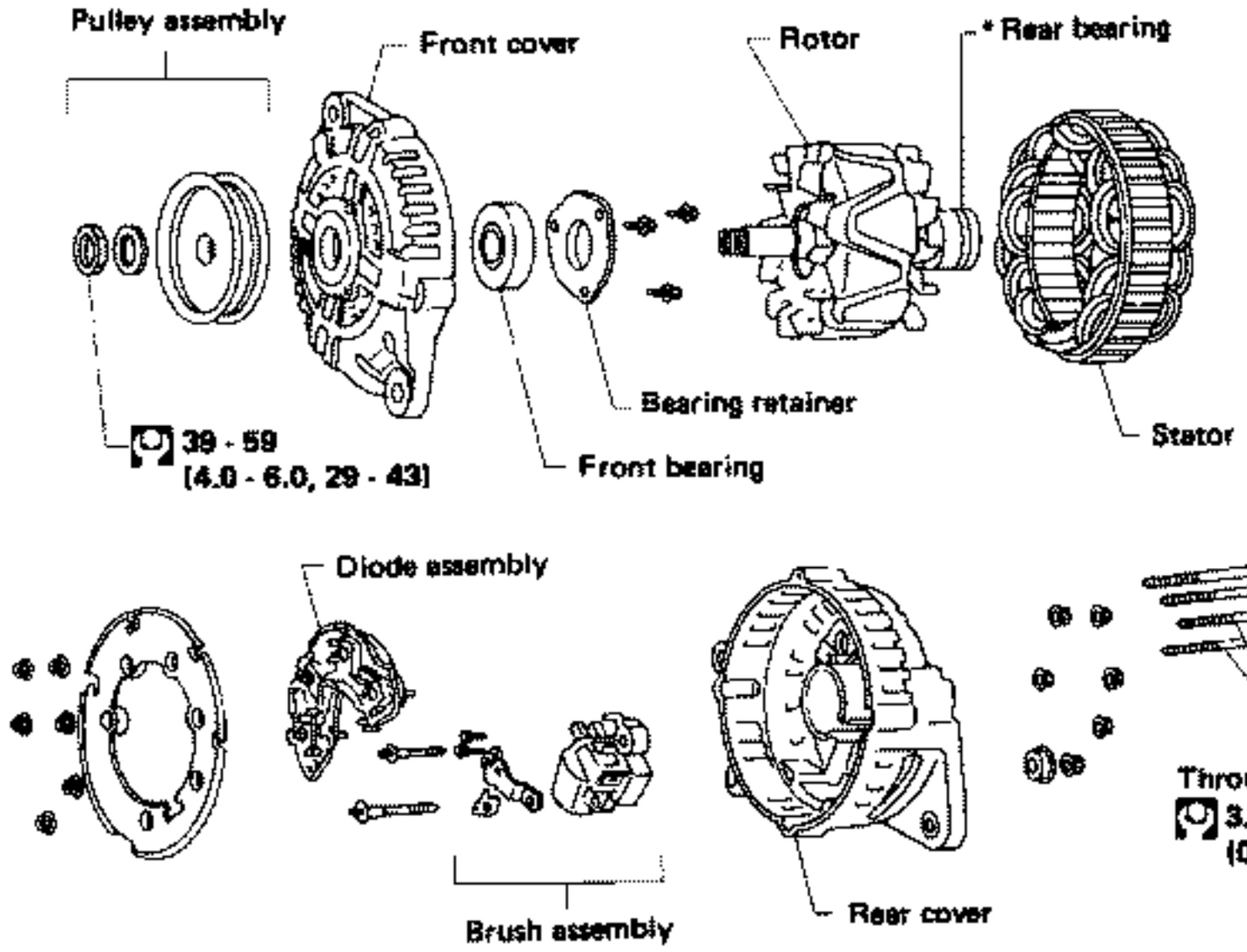

SEL686N

A3T05192

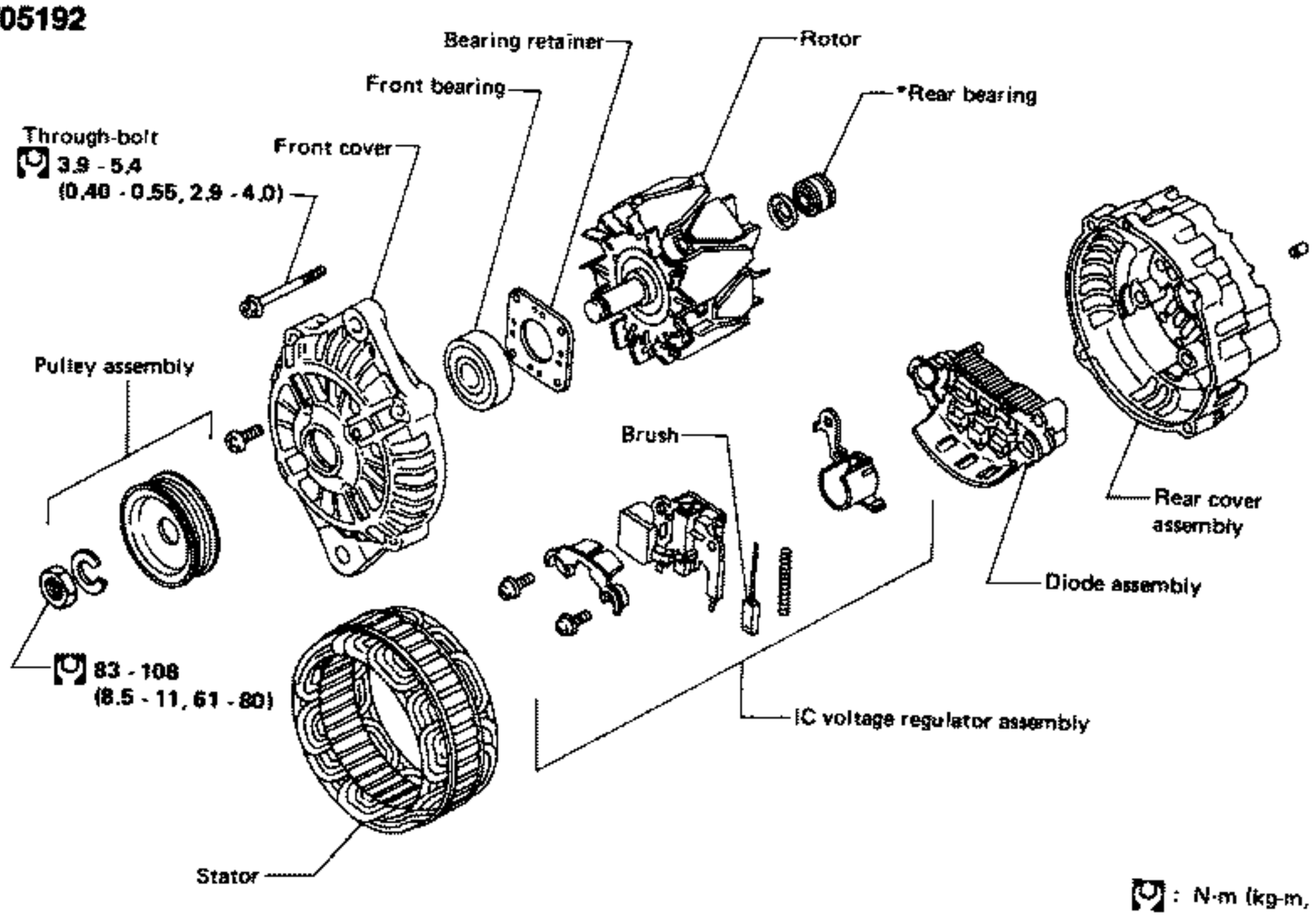

SEL687N

***Rear bearing**
CAUTION:
Rear cover may be hard to remove because a ring is used to lock outer race of rear bearing. Be careful not to lose this ring during removal.

Z.ONE.DATSUN

Removal and Installation

REMOVAL

1. Loosen alternator belt.
2. Remove alternator adjusting bar.
3. Remove harness connector and cable from alternator.

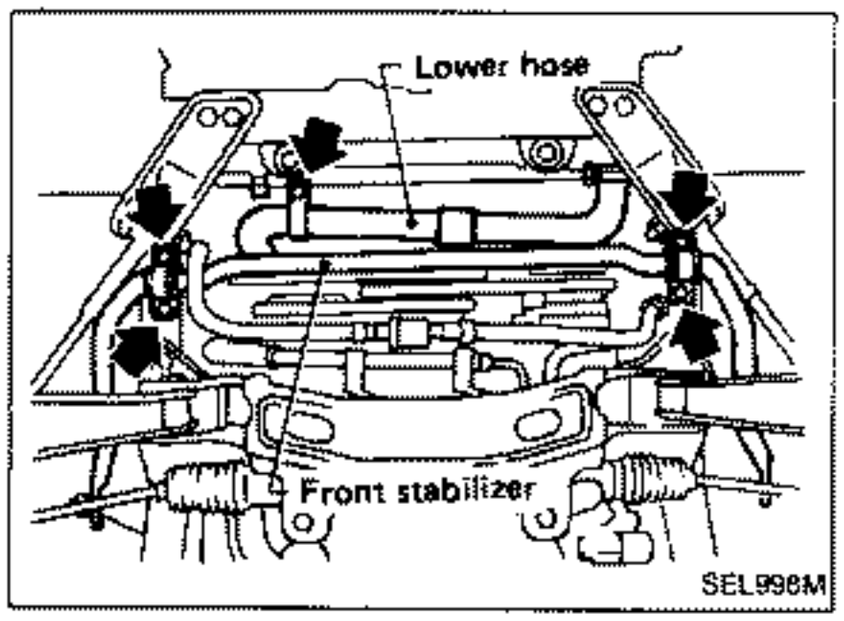

4. Remove stabilizer bracket fixing bolts.
5. Remove radiator lower hose bracket and push lower hose upward to make room.

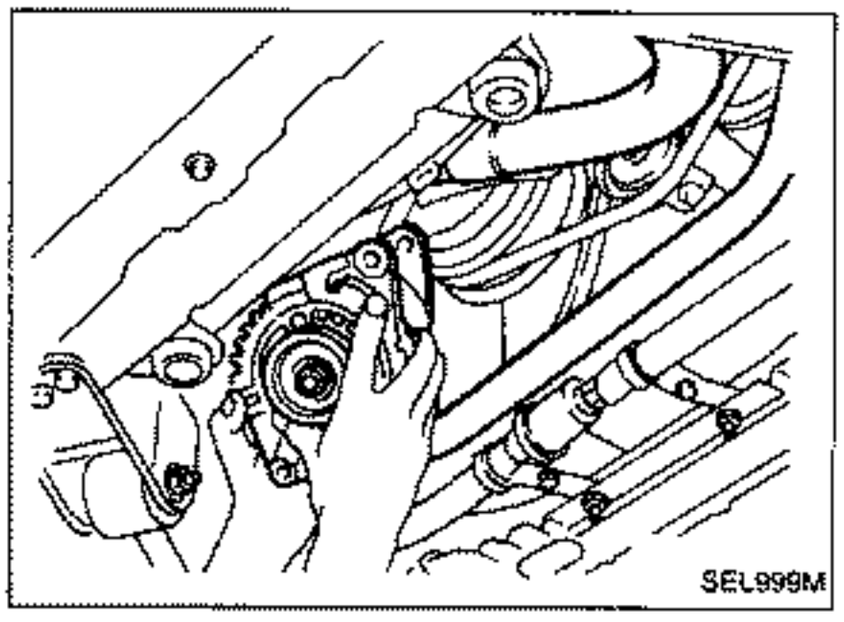

6. Remove alternator fixing bolt and take out alternator as shown in the figure.

INSTALLATION

- Installation procedure is in reverse order of removal.

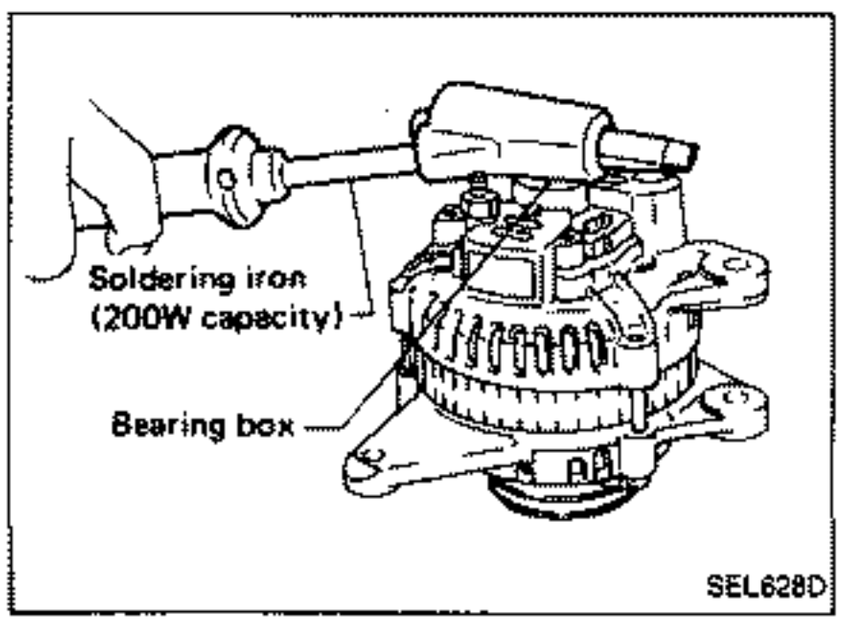

Disassembly

CAUTION:

Rear cover may be hard to remove because a ring is used to lock outer race of rear bearing. To facilitate removal of rear cover, heat just bearing box section with a 200W soldering iron. Do not use a heat gun, as it can damage diode assembly.

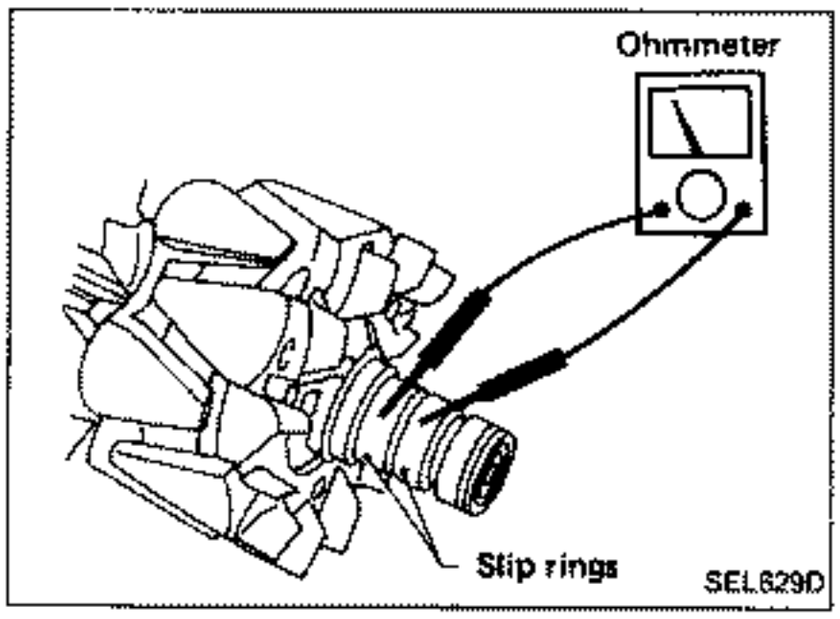

Rotor Slip Ring Check

1. Continuity test
   - No continuity ... Replace rotor.

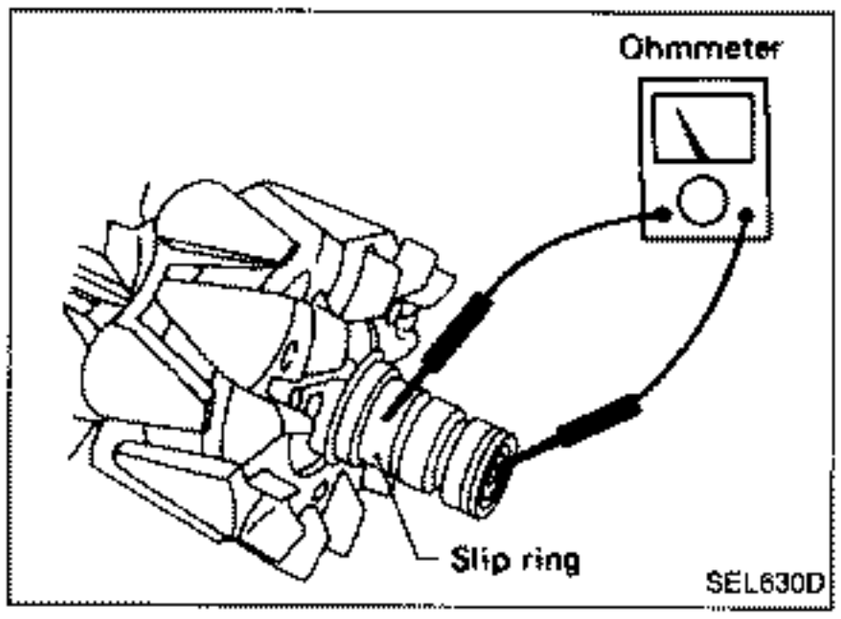

2. Insulator test
   - Continuity exists ... Replace rotor.
3. Check slip ring for wear.
   Slip ring minimum outer diameter:
   Refer to S.D.S.

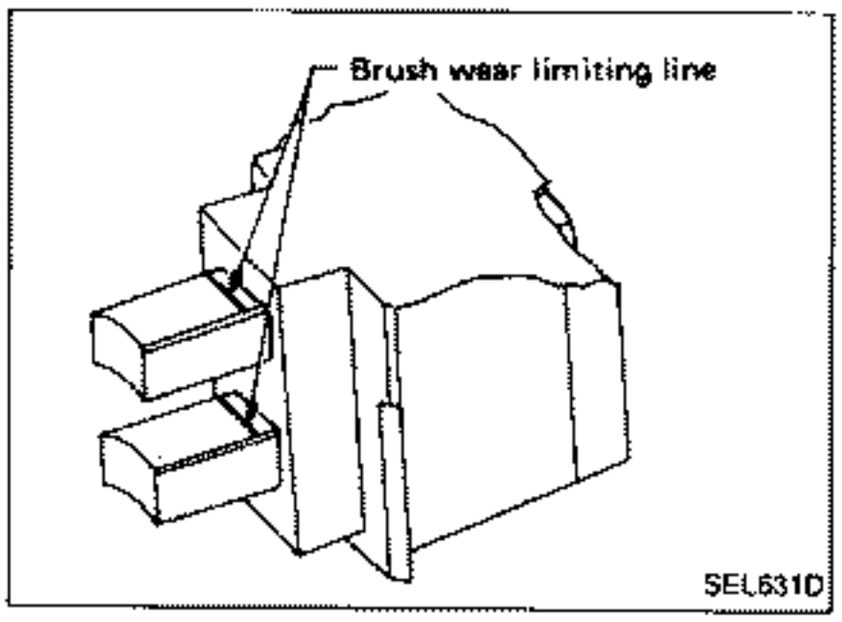

Brush Check

1. Check smooth movement of brush.
   - Not smooth ... Check brush holder and clean.
2. Check brush for wear.
   - Replace brush if it is worn down to the limit line.

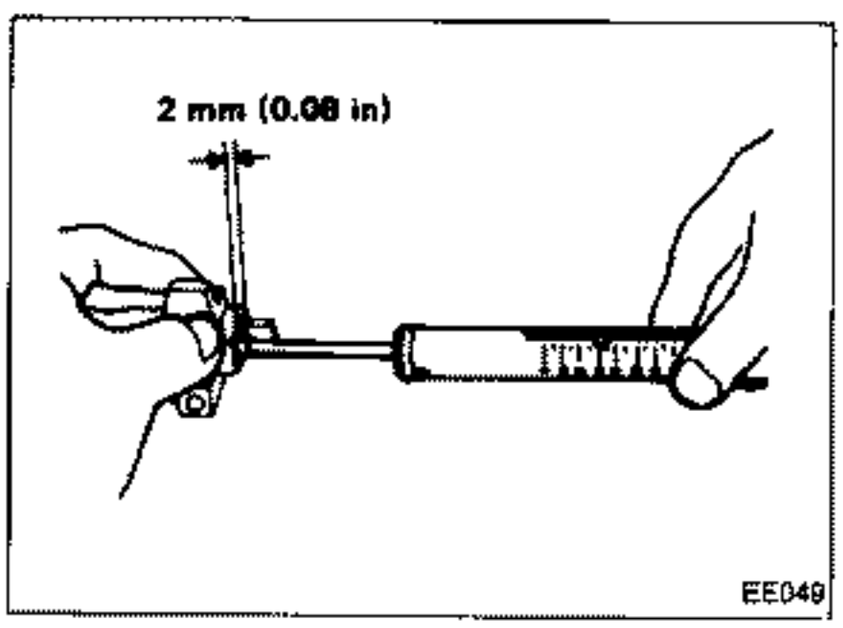

3. Check brush lead wire for damage.
   - Damaged ... Replace.
4. Check brush spring pressure with brush projected approximately 2 mm(0.08 in) from brush holder.
   Spring pressure:
   Refer to S.D.S.
   - Not within the specified values ... Replace.

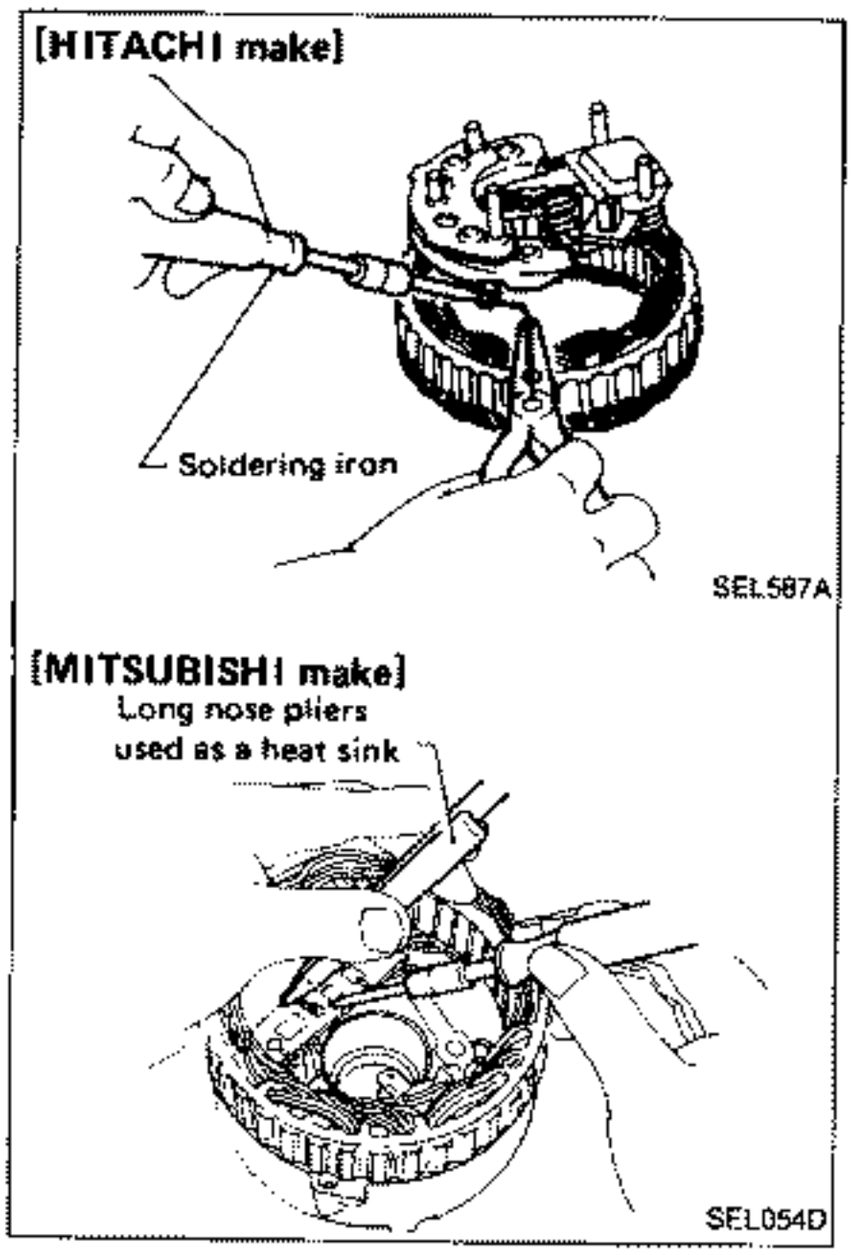

Stator Check

To test the stator or diode, you must separate them by unsoldering the connecting wires.
CAUTION:
Use only as much heat as required to melt solder. Otherwise, diodes will be damaged by excessive heat.

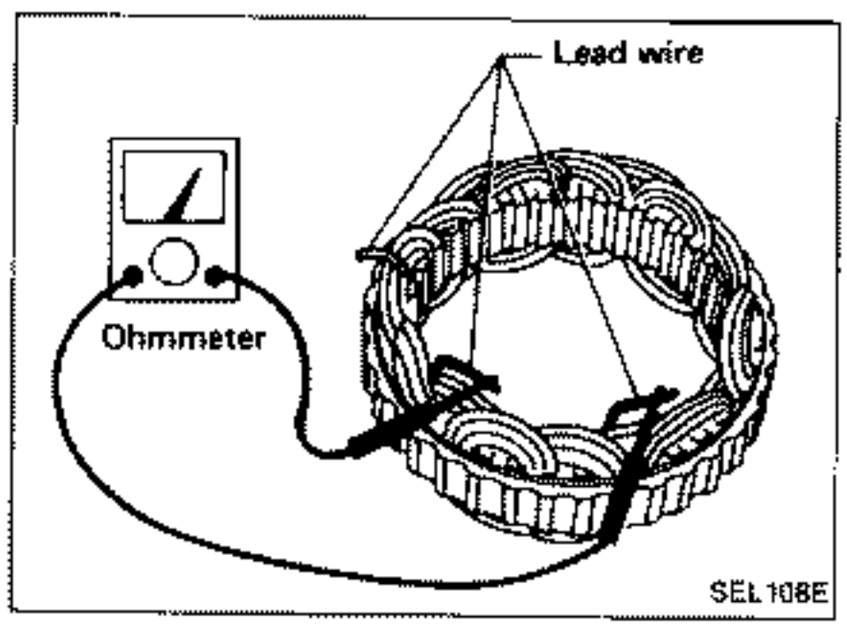

1. Continuity test
   - No continuity ... Replace stator.

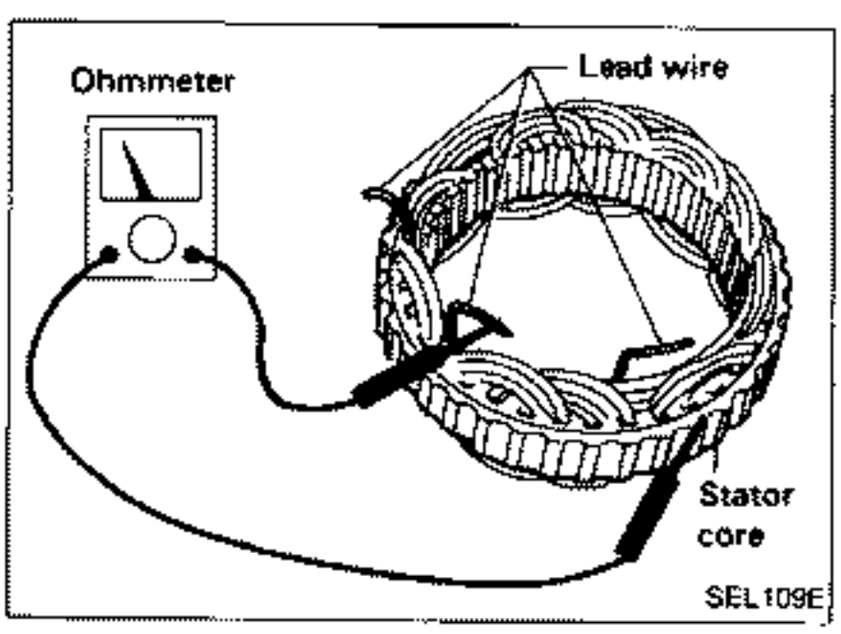

2. Ground test
   - Continuity exists ... Replace stator.

Z.ONE.DATSUN

Diode Check

MAIN DIODES

- Use an ohmmeter to check condition of diodes as indicated in chart below.
- If any of the test results is not satisfactory, replace diode assembly.

	Ohmmeter probes		Continuity
	Positive ⊕	Negative ⊖	
Diodes check (Positive side)	Positive diode plate	Diode terminals	Yes
	Diode terminals	Positive diode plate	No
Diodes check (Negative side)	Negative diode plate	Diode terminals	No
	Diode terminals	Negative diode plate	Yes

[HITACHI make]

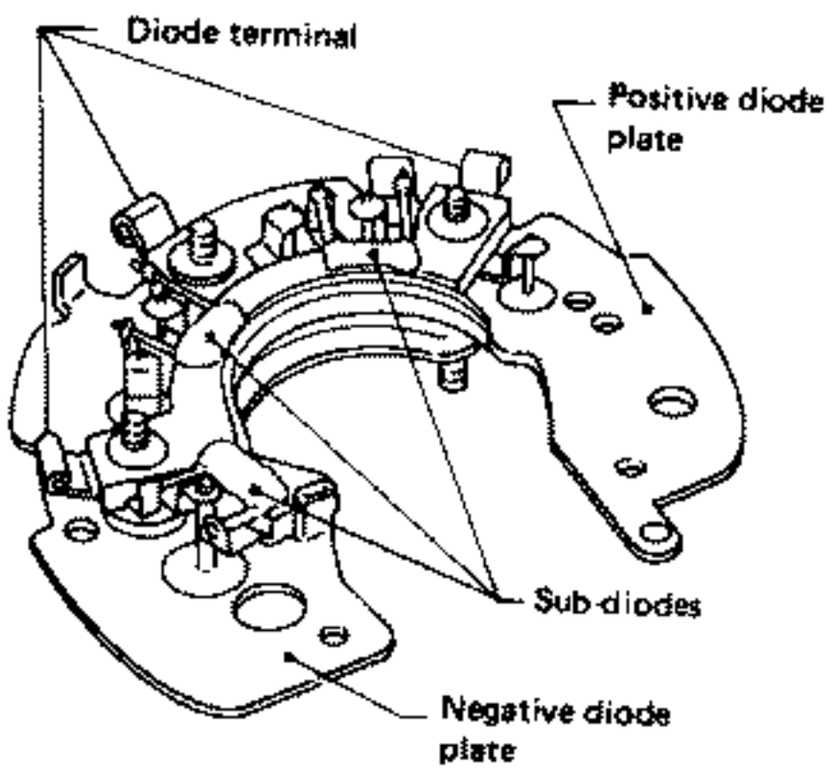

SEL768D

[MITSUBISHI make]

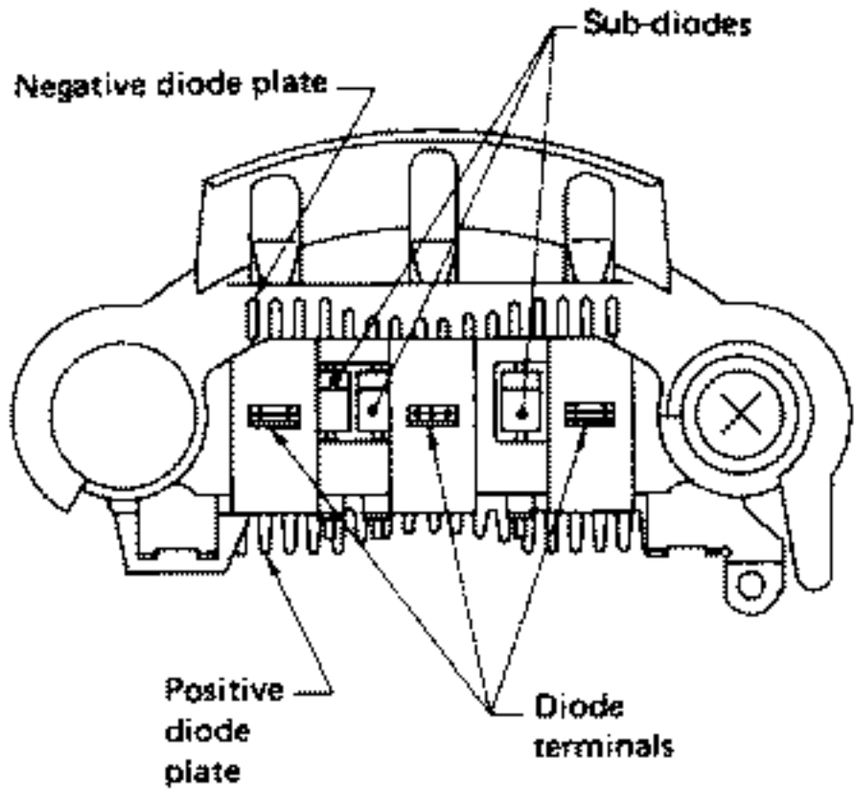

SEL493H

[HITACHI make]

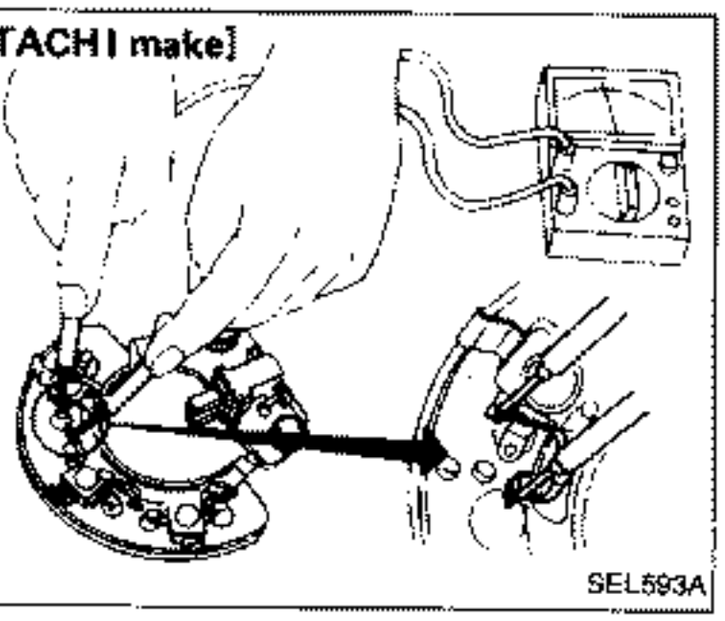

SEL593A

SUB-DIODES

- Attach ohmmeter's probe to each end of diode to check for continuity.
- Continuity is N.G .... Replace diode assembly.

[MITSUBISHI make]

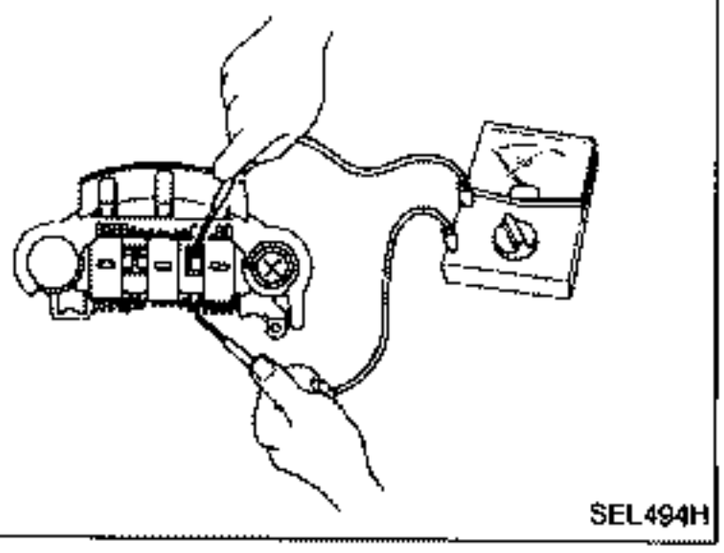

SEL494H

Assembly

Carefully observe the following instructions.

- When soldering each stator coil lead wire to diode assembly terminal,carry out the operation as fast as possible.

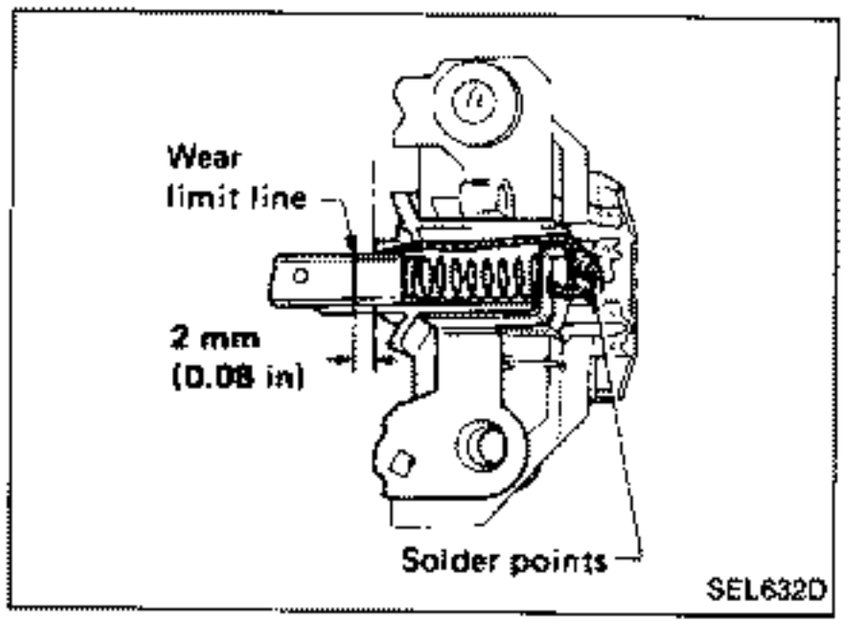

WHEN SOLDERING BRUSH LEAD WIRE

[MITSUBISHI make]

- Position brush so that its wear limit line protrudes 2 mm (0.08 in) beyond end face of brush holder.

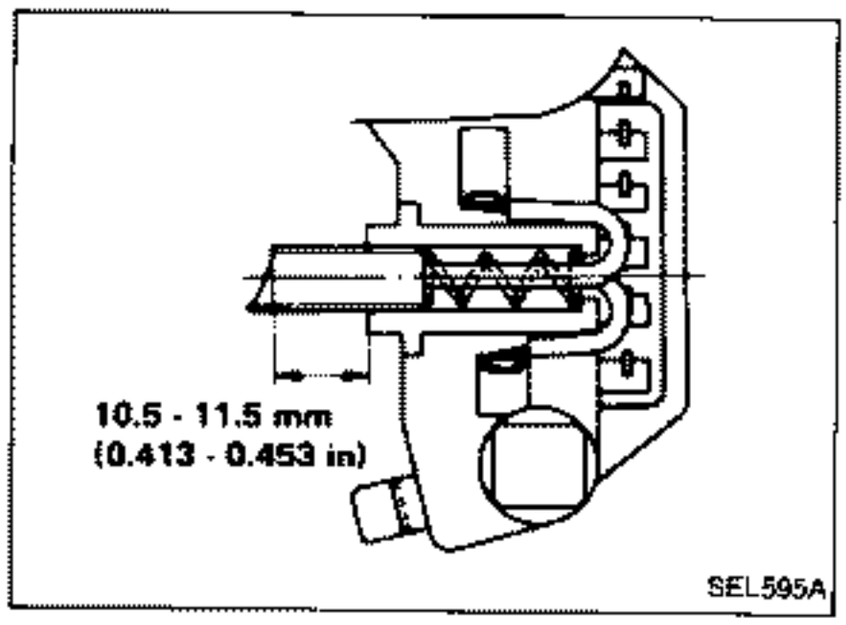

[HITACHI make]

(1) Position brush so that it extends 10.5 to 11.5 mm (0.413 to 0.453 in) from brush holder.

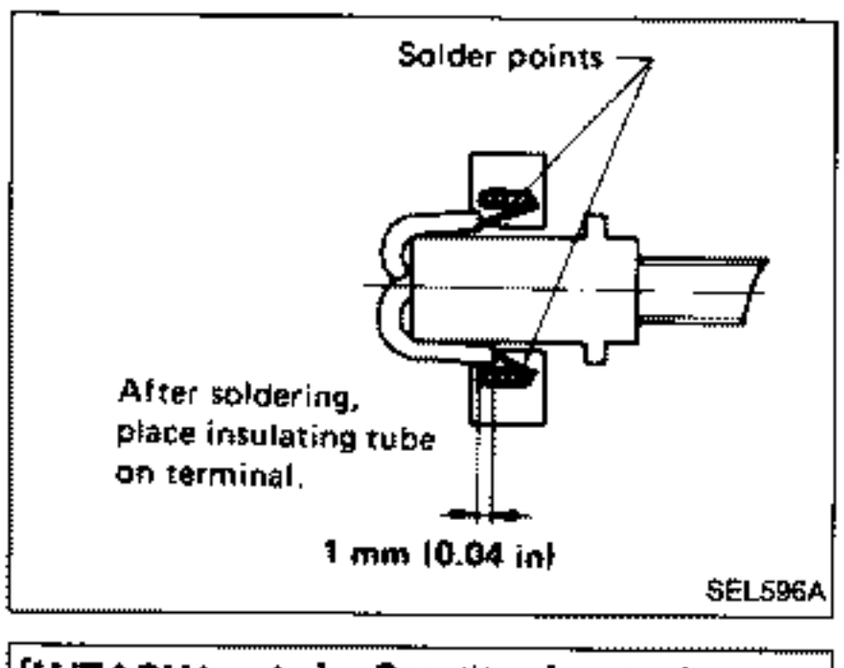

(2) Coil lead wire 1.5 times around terminal groove. Solder outside of terminal.

When soldering, be careful not to let solder adhere to insulating tube as it will weaken the tube and cause it to break.

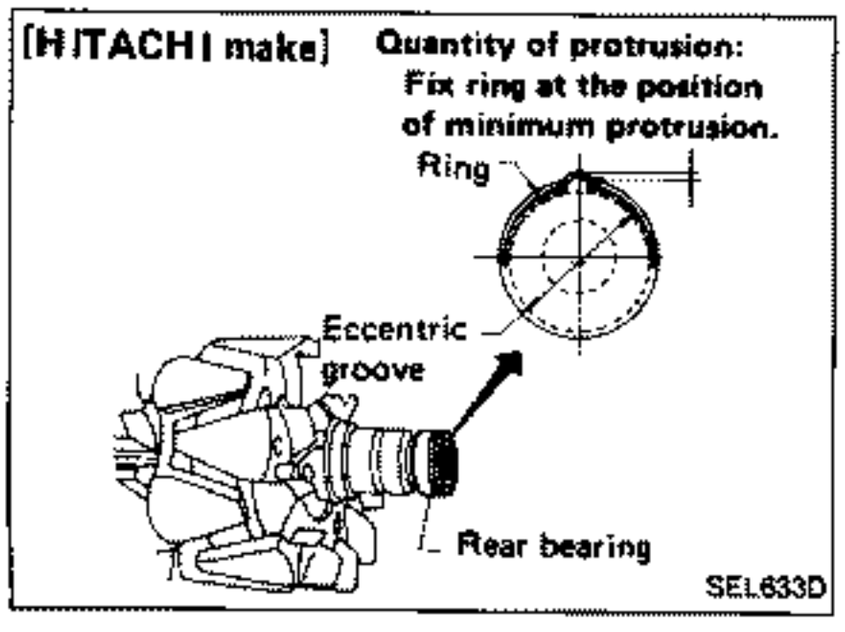

RING FITTING IN REAR BEARING

[HITACHI make]

- Fix ring into groove in rear bearing so that it is as close to the adjacent area as possible.

[MITSUBISHI make]

- Always press new bearing into place with ring groove toward slip ring.

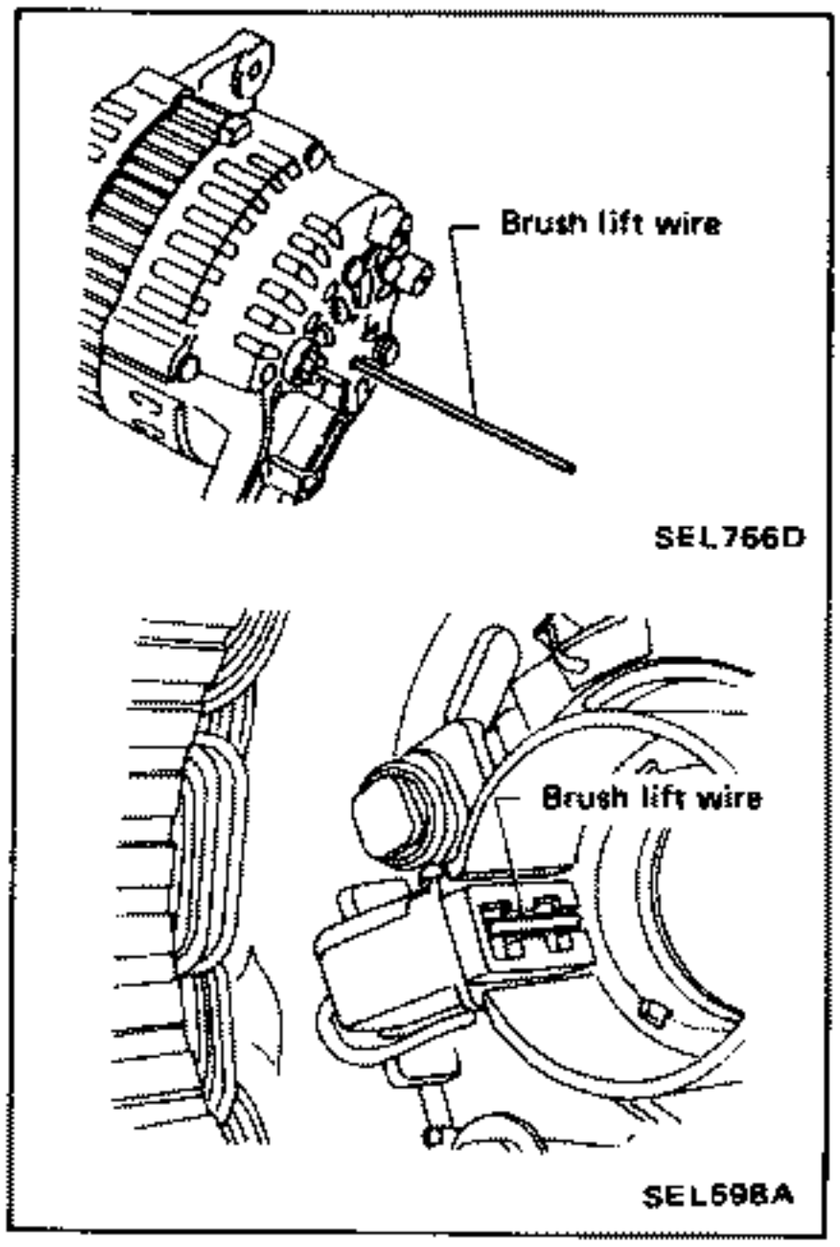

Assembly (Cont'd)

REAR COVER INSTALLATION

(1) Before installing front cover with pulley and rotor with rear cover, push brush up with fingers and retain brush by inserting brush lift wire into brush lift hole from outside.
(2) After installing front and rear sides of alternator, pull out brush lift wire.

Service Data and Specifications (S.D.S.)

ALTERNATOR

Type		LR180-724 HITACHI make	A3T05192 MITSUBISHI make
Applied model		Australia	Europe
Nominal rating	V-A	12-80	12-90
Ground polarity		Negative	
Minimum revolution under no-load (when 13.5 volts is applied)	rpm	Less than 950	Less than 1,300
Hot output current	A/rpm	More than 65/2,500 More than 80/5,000	More than 65/2,500 More than 90/5,000
Regulated output voltage	V	14.1 - 14.7	
Minimum length of brush	mm (in)	More than 7.0(0.276)	More than 8.0 (0.315)
Brush spring pressure	N(g, oz)	1.863 - 3.040 (190 - 310, 6.70 - 10.93)	3.040 -4.217 (310 - 430, 10.93 - 15.17)
Slip ring minimum outer diameter	mm (in)	More than 30.6 (1.205)	More than22.1 (0.870)

Combination Switch/Check

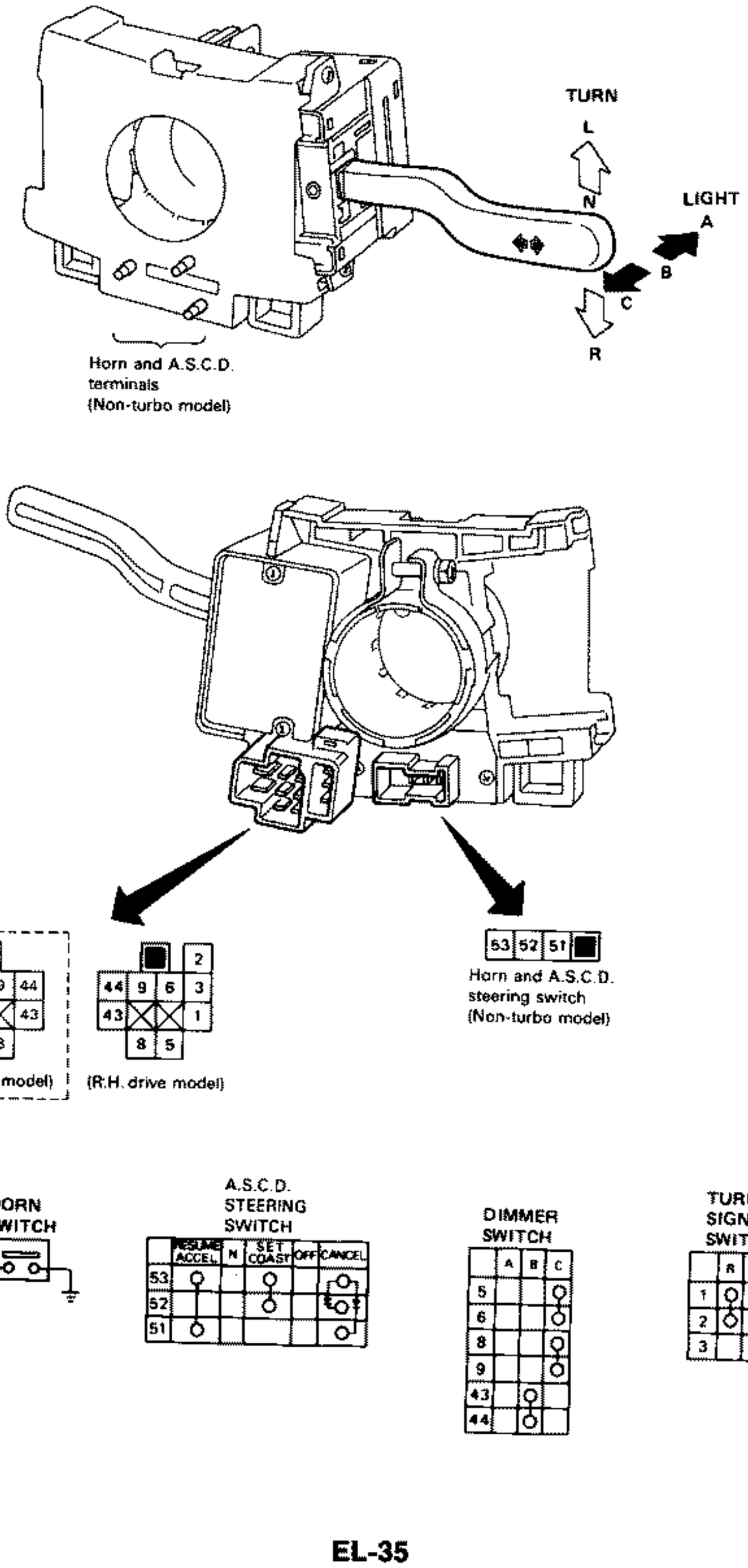

SEL313P

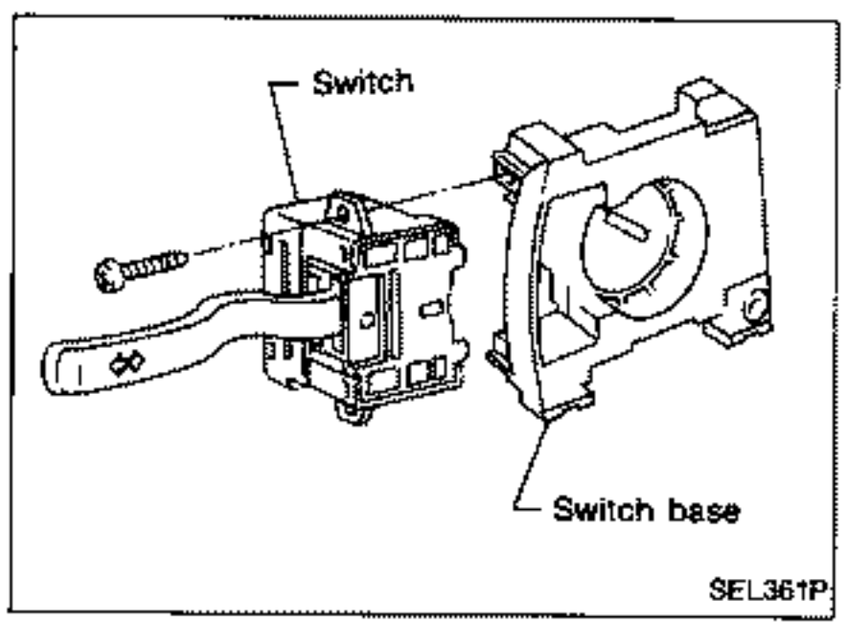

Combination Switch/Replacement

- Each switch can be replaced without removing combination switch base.
- To remove combination switch base, remove base attaching screw and turn after pushing on it.

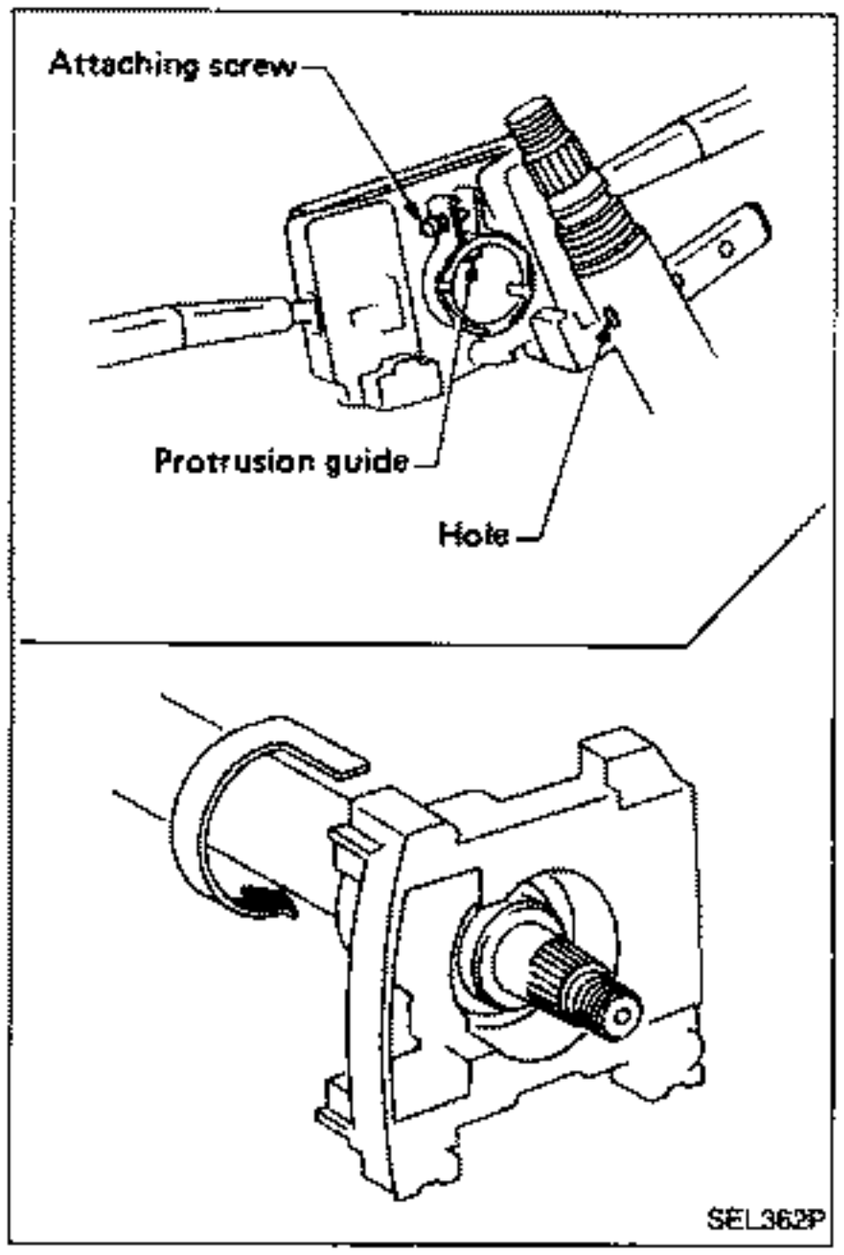

Steering Switch/Check

Turbo model

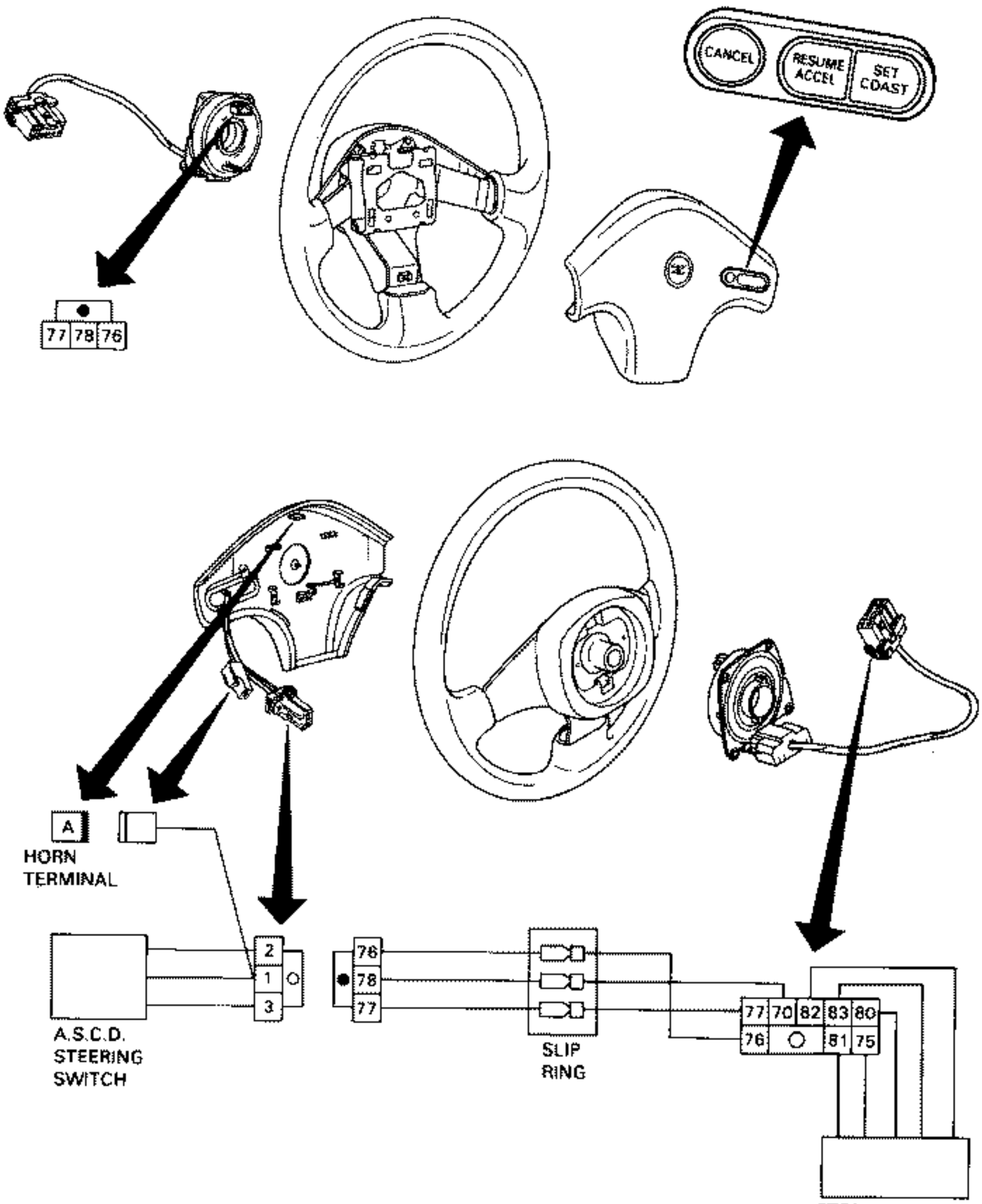

A.S.C.D. STEERING SWITCH

	RESUME ACCEL	N	SET COAST	OFF	CANCEL
1	○		○		○
2			○		○
3	○				○

HORN SWITCH

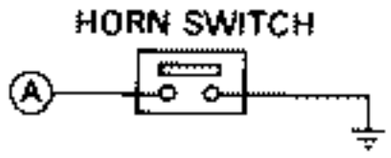

SEL314P

Check

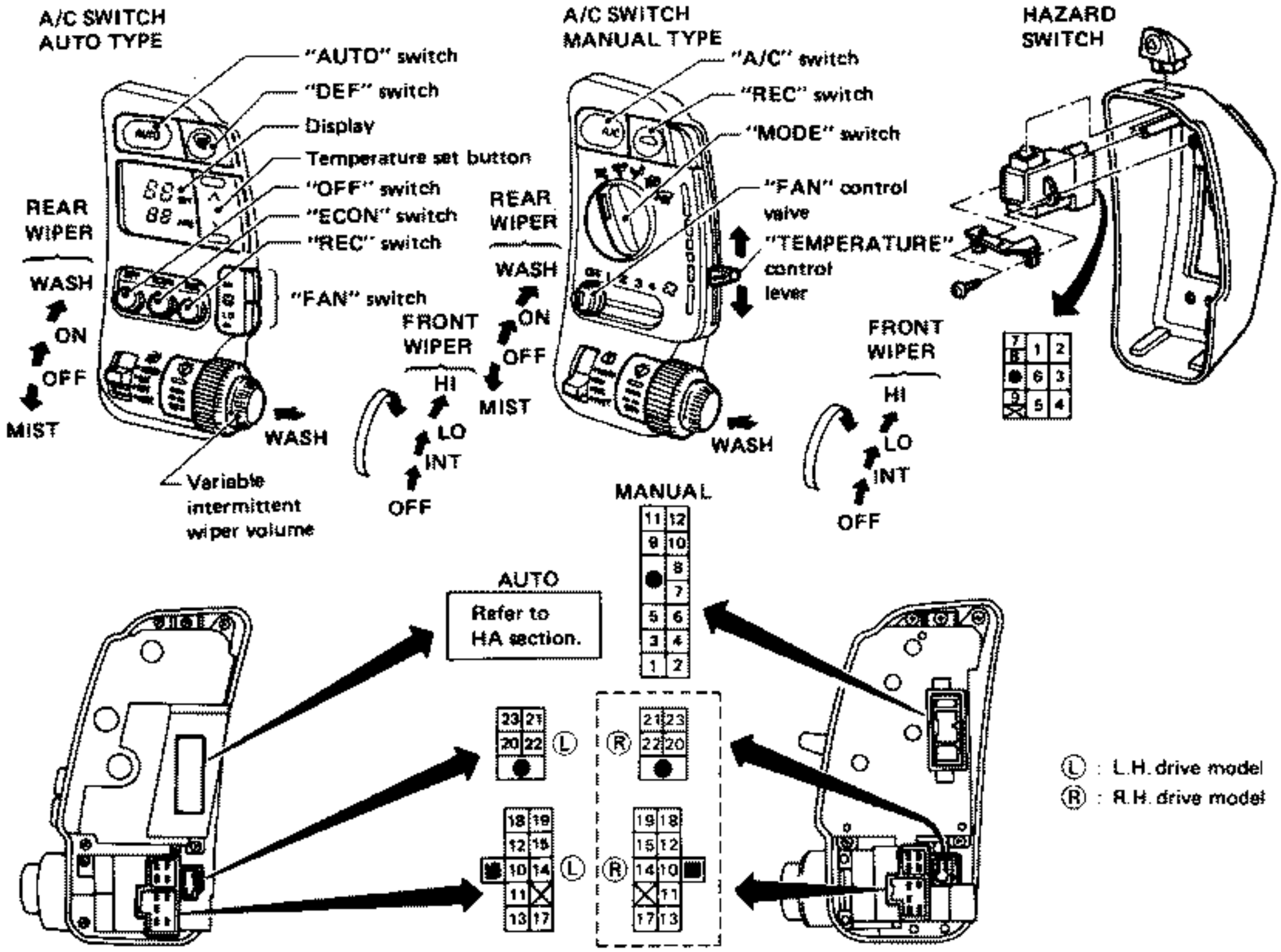

A/C SWITCH, MANUAL TYPE

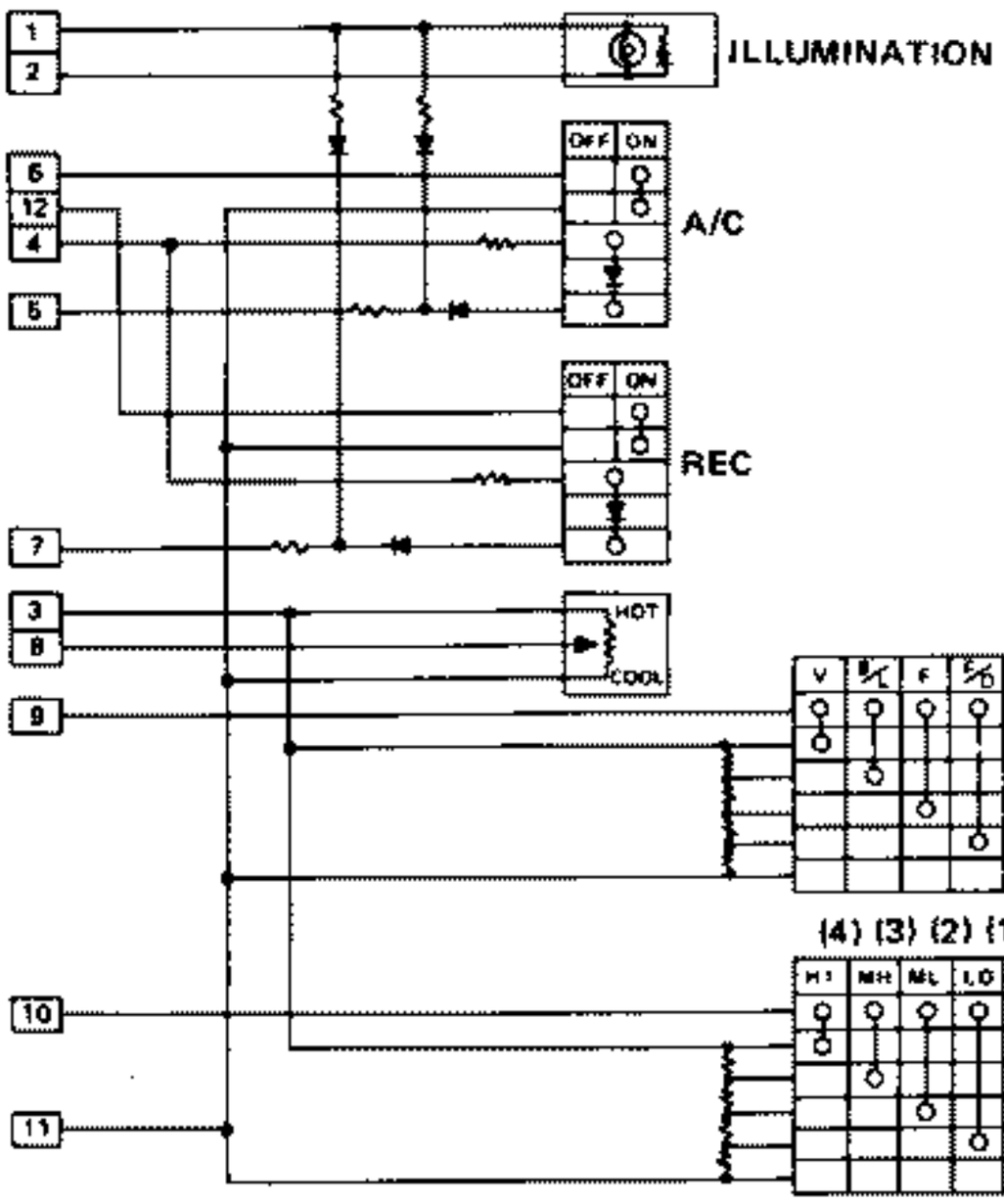

FRONT WIPER SWITCH

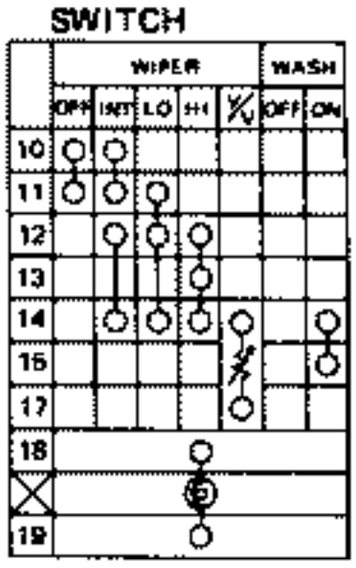

REAR WIPER SWITCH

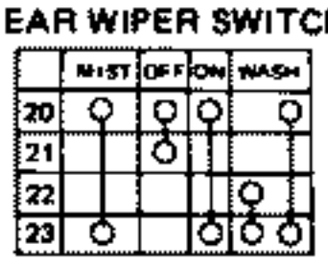

HAZARD SWITCH

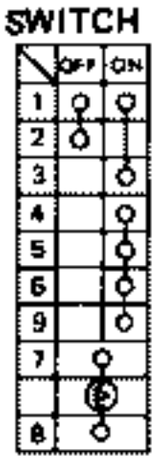

Check (Cont'd)

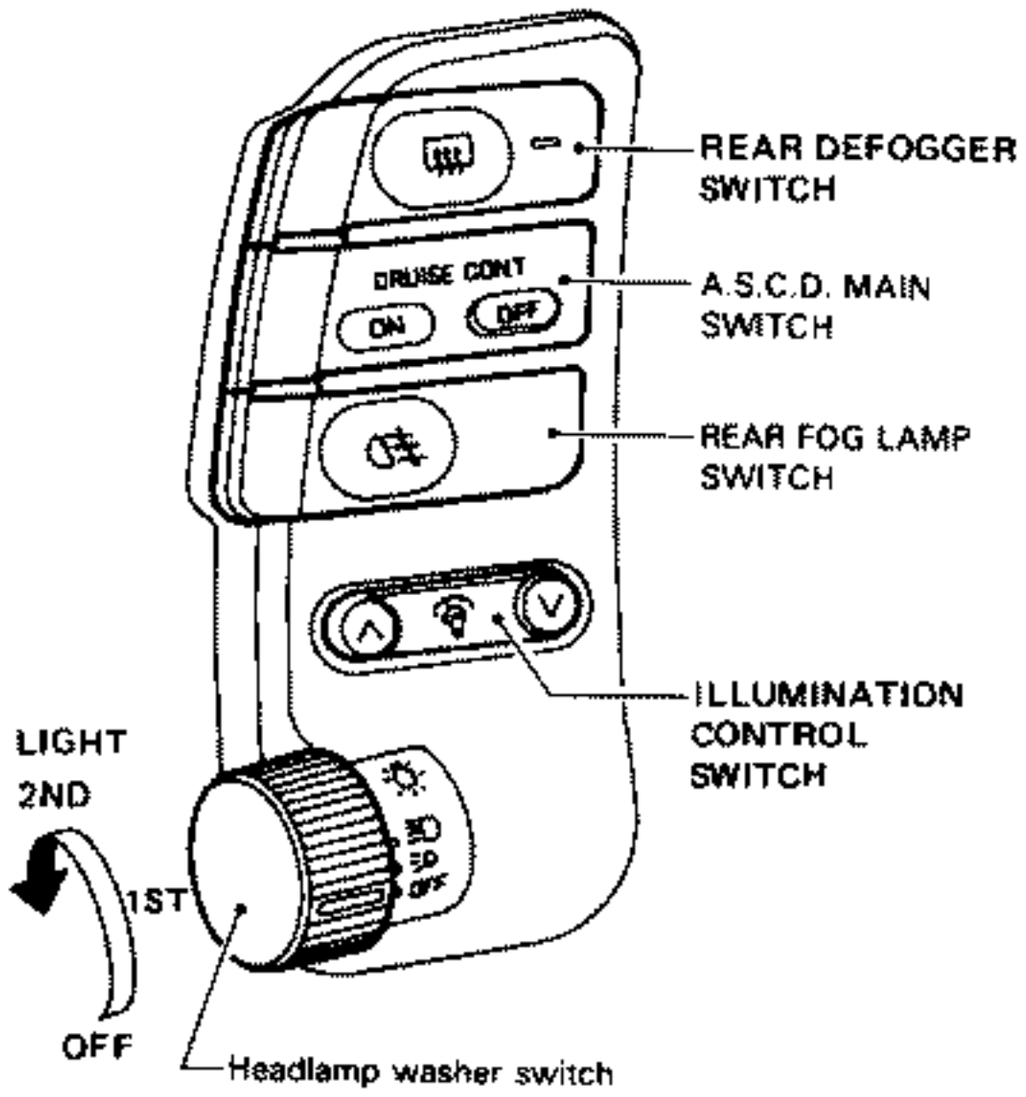

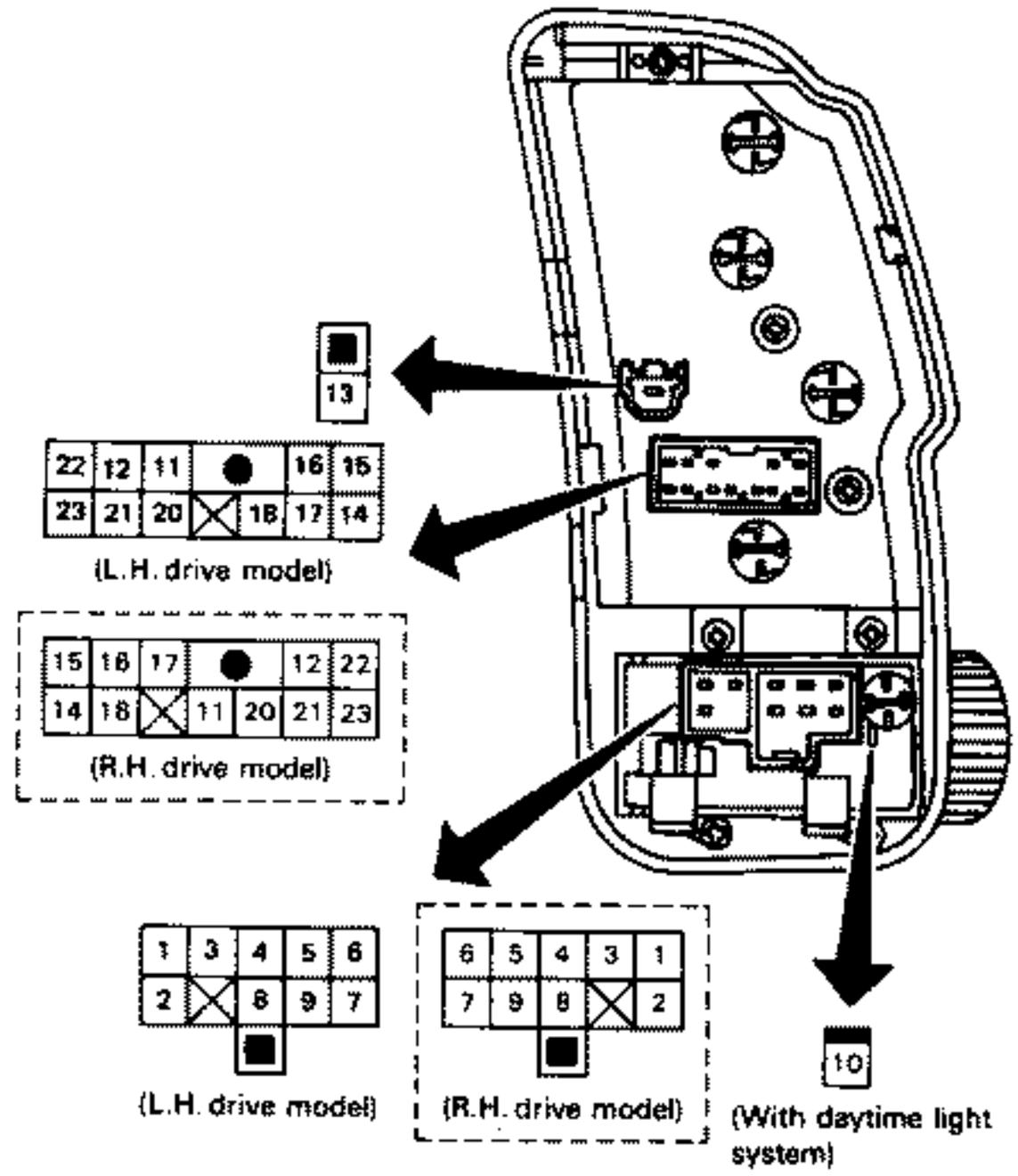

LIGHTING SWITCH

	OFF	1ST	2ND
1			○
2			○
3			○
4			○
5		○	○
6		○	○
⊠	○	○	
⊠	●		
7	○		

(Without daytime light system)

	OFF	1ST	2ND
1			○
2			○
3			○
4			○
5		○	○
6		○	○
10	○		
⊠	●		
7	○		

(With daytime light system)

REAR DEFOGGER SWITCH

	OFF	ON
11		○
12		○
⊠		●
13		○

A.S.C.D. MAIN SWITCH

	OFF	N	ON
14			○
15		○	○
16		○	○

REAR FOG LAMP SWITCH

	OFF	ON
17		○
18		○

HEADLAMP WASHER SWITCH

	OFF	ON
8		○
9		○

ILLUMINATION CONTROL SWITCH

	V	N	Λ
20			○
21	○		
12	○		○

CLUSTER ILLUMINATION

22	○
⊠	●
23	○

SEL315P

Schematic (Models without daytime light system and dim-dip lamp system)

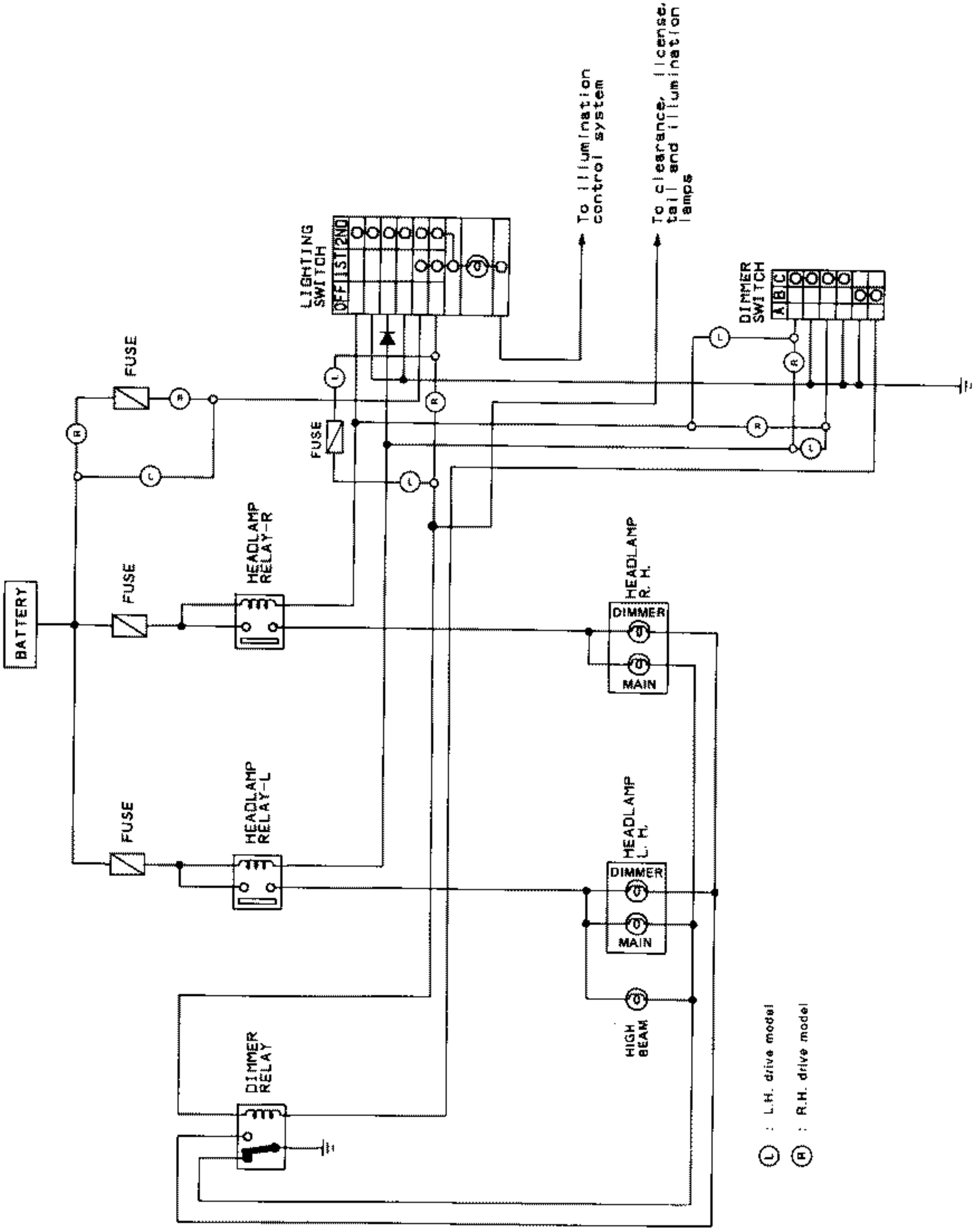

SEL316P

Wiring Diagram (Models without daytime light system and dim-dip lamp system)

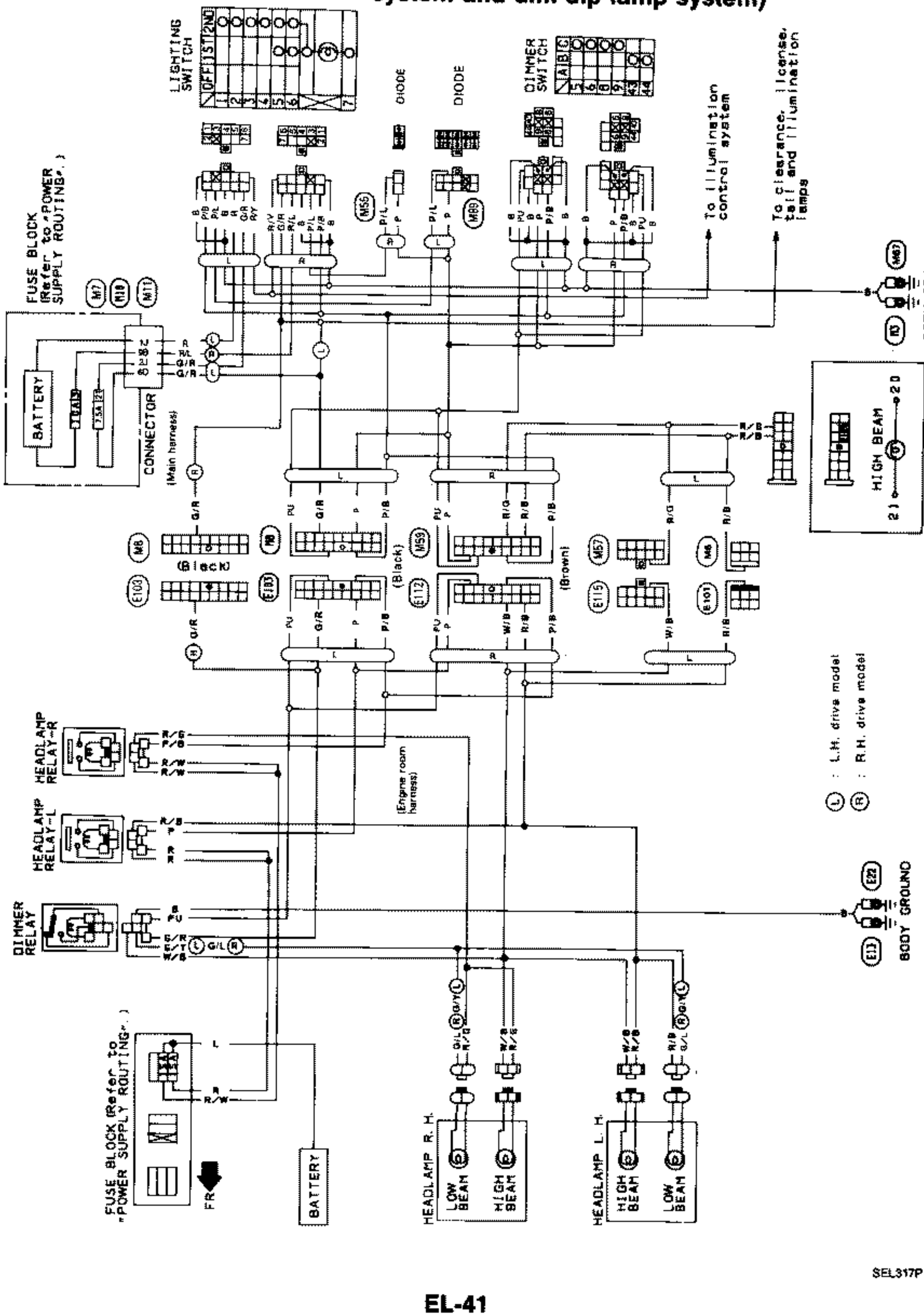

SEL317P

Operation (Models equipped with daytime light system)

After starting the engine with the lighting switch in the "OFF" position, the headlamp low beam and clearance, tail, license and instrument illumination lamps automatically turn on. Lighting switch operations other than the above are the same as conventional light systems.

Engine		With engine stopped									With engine running								
Lighting switch		OFF			1ST			2ND			OFF			1ST			2ND		
		A	B	C	A	B	C	A	B	C	A	B	C	A	B	C	A	B	C
Headlamp	High beam	X	X	O	X	X	O	O	X	O	X	X	O	X	X	O	O	X	O
	Low beam	X	X	X	X	X	X	X	O	X	O	O	O	X	X	X	X	O	X
Clearance and tail lamp		X	X	X	O	O	O	O	O	O	O	O	O	O	O	O	O	O	O
License and instrument illumination lamp		X	X	X	O	O	O	O	O	O	O	O	O	O	O	O	O	O	O

O : Lamp "ON"

X : Lamp "OFF"

■ : Added functions

Schematic (Models equipped with daytime light system)

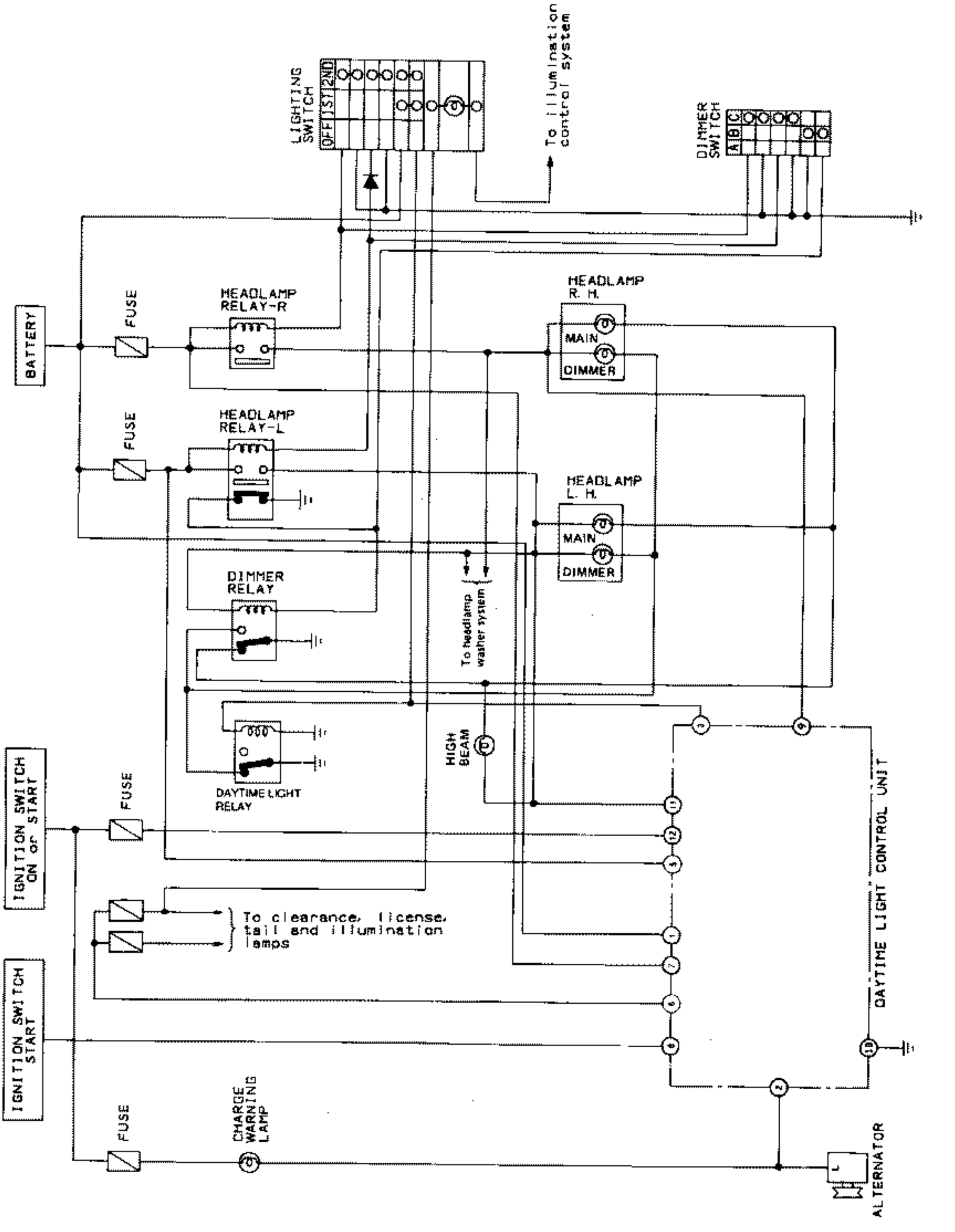

SEL318P

Wiring Diagram (Models equipped with daytime light system)

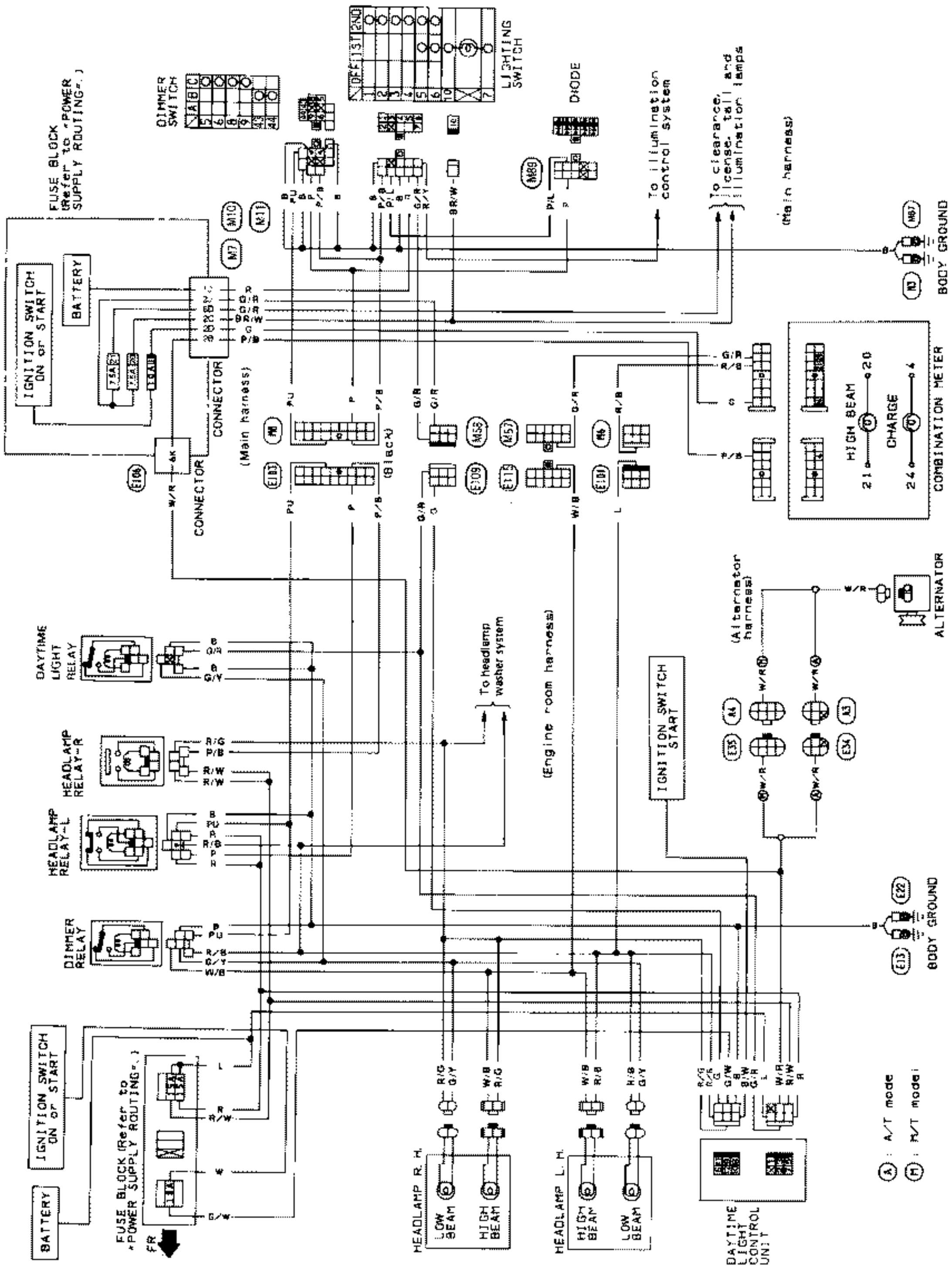

SEL319P

Operation (Models equipped with dim-dip lamp)

When ignition switch is in the "ON" position with the lighting switch in the "1ST" position, the headlamp low beam comes on dimly to function as a clearance lamp. Lighting switch operations other than the above are the same as conventional light systems.

Ignition switch		OFF or ACC									ON								
Lighting switch		OFF			1ST			2ND			OFF			1ST			2ND		
		A	B	C	A	B	C	A	B	C	A	B	C	A	B	C	A	B	C
Headlamp	High beam	X	X	O	X	X	O	O	X	O	X	X	O	X	X	O	O	X	O
	Low beam	X	X	X	X	X	X	X	O	X	X	X	X	X	X	X	X	O	X
	Dim-dip (Low beam)	X	X	X	X	X	X	X	X	X	X	X	X	O	O	X	X	X	X
Clearance, tail, license and illumination lamps		X	X	X	O	O	O	O	O	O	X	X	X	O	O	O	O	O	O

O : Lamp "ON"

X : Lamp "OFF"

□ : Added functions

Schematic (Models equipped with dim-dip lamp)

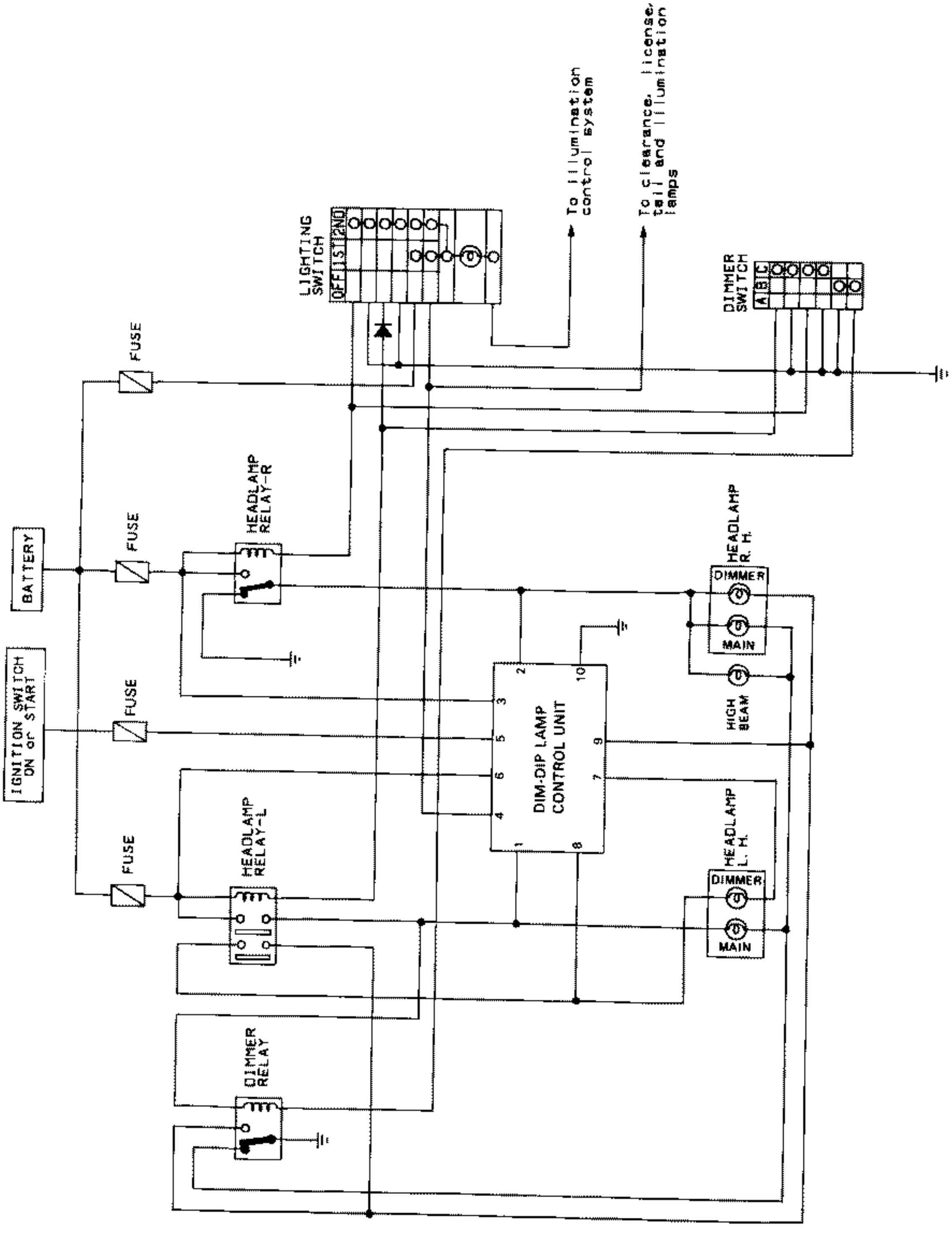

SEL320P

Wiring Diagram (Models equipped with dim-dip lamp)

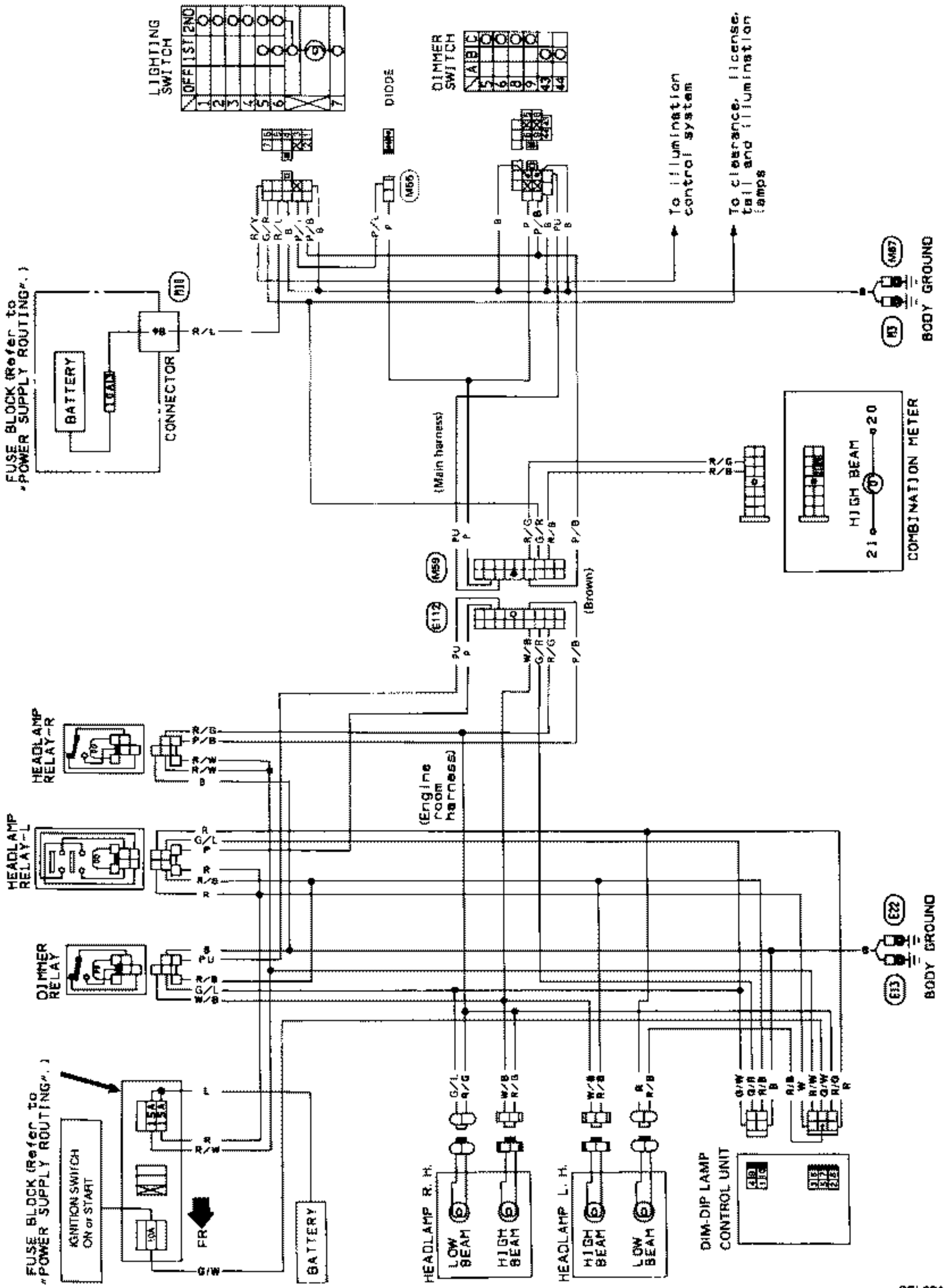

Description

- The vertical direction of the headlamp projection can be adjusted from inside the vehicle to prevent the headlight beam axis from facing upward due to a change in the number of occupants and load conditions in the vehicle.

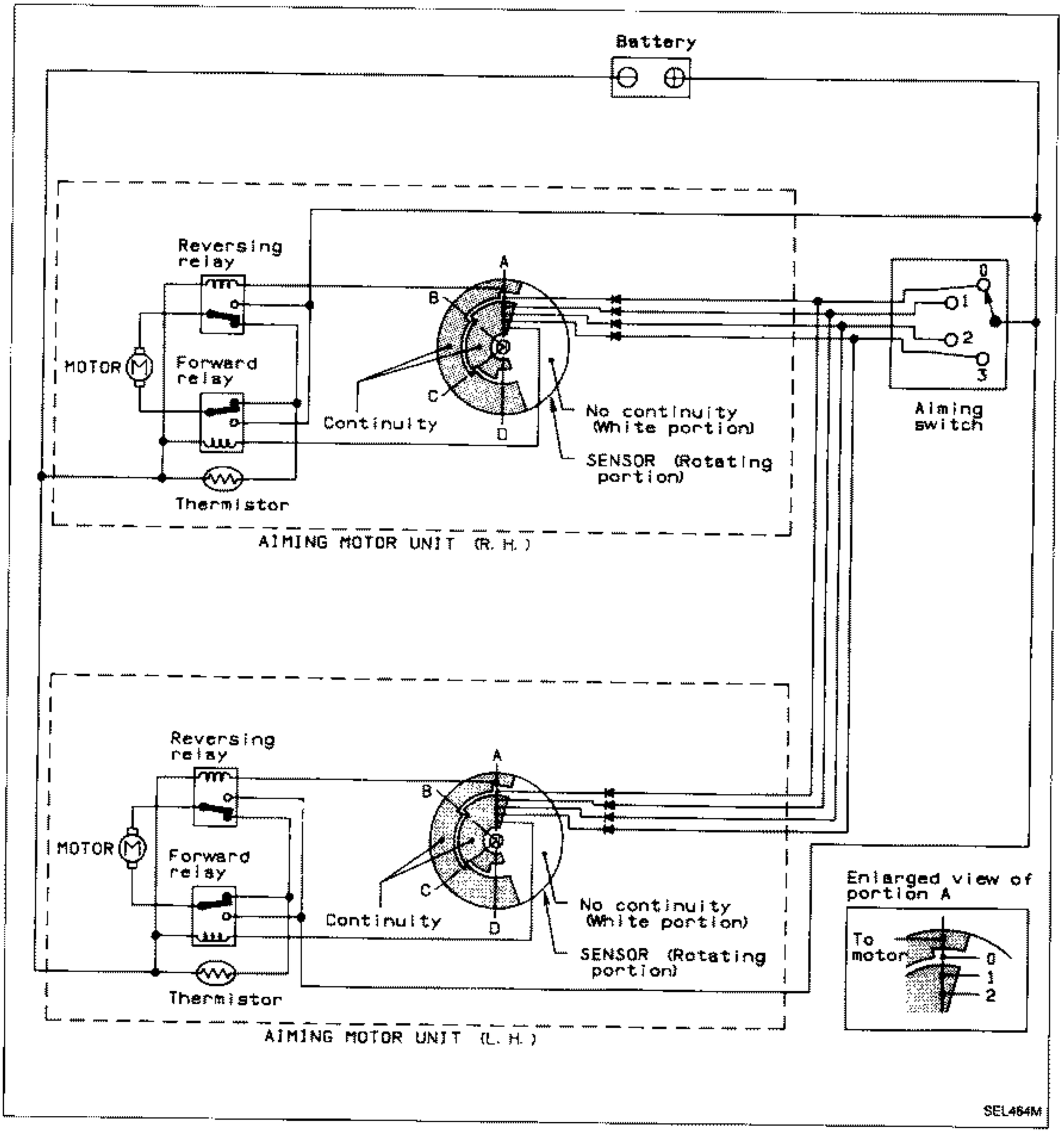

SEL464M

Description (Cont'd)

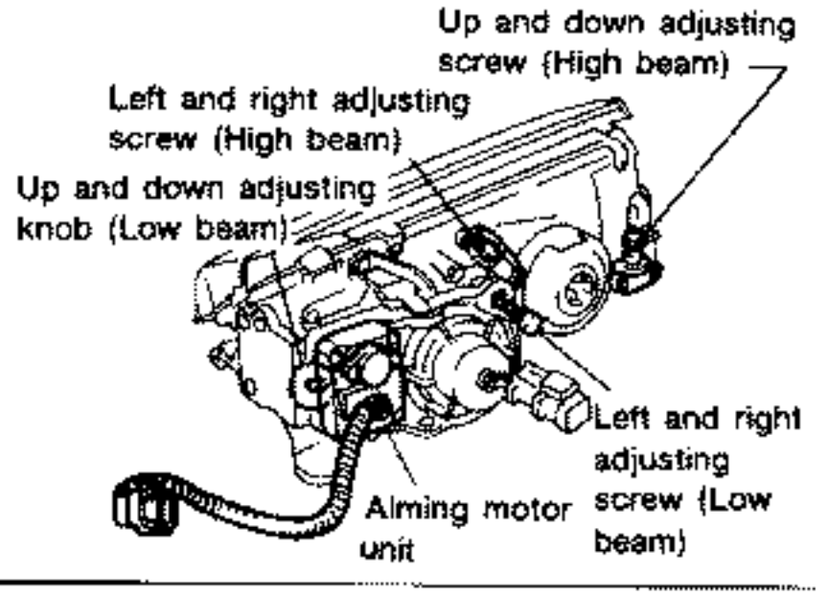

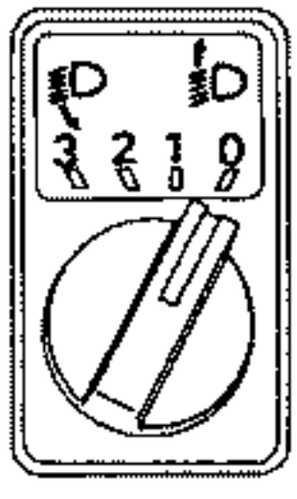

SEL363P

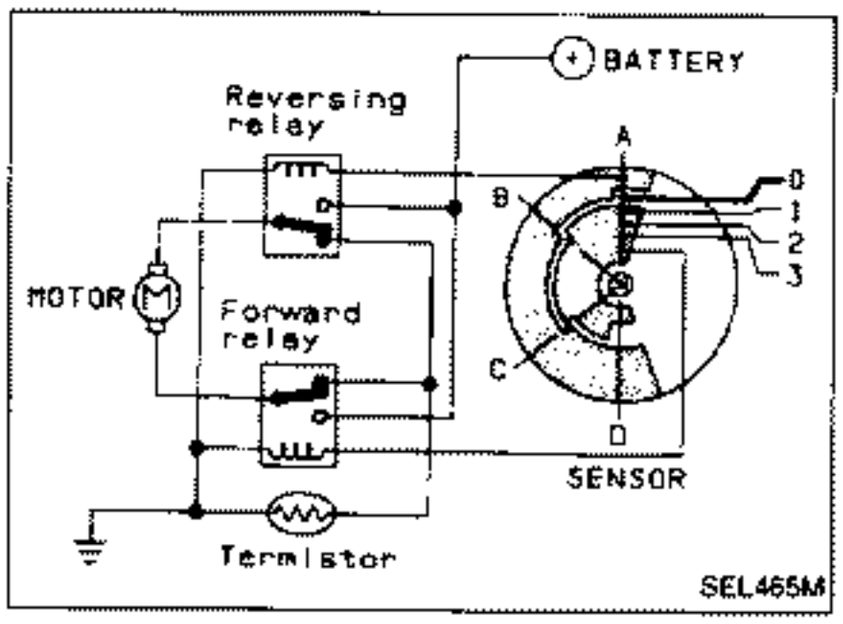

SEL465M

CIRCUIT OPERATION

[Example]

Aiming switch "0"

- When the aiming switch is set to "0", the motor will not start because the power terminals are positioned at the nonconductive section of the sensor's rotary unit.

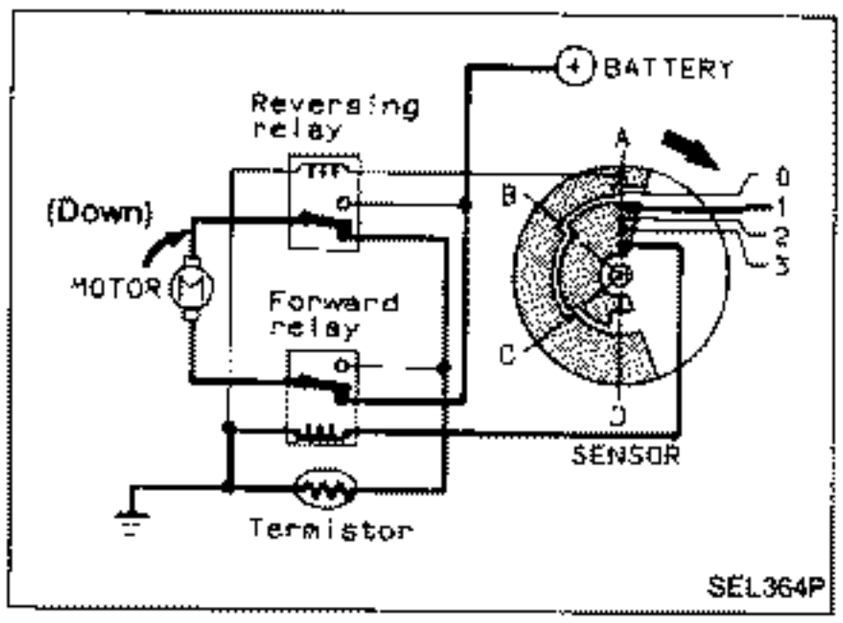

SEL364P

Aiming switch "0" → "1"

- When the aiming switch is moved from "0" to "1", power is applied to the motor through the relay operated by the sensor's conductive section. The headlamps will then move in the "DOWN" direction.
- The motor continues to rotate while the rotary unit of the sensor moves from point A to point B.
- The power terminals will then be positioned at the nonconductive section, disconnecting the power to the motor. Then motor then stops.

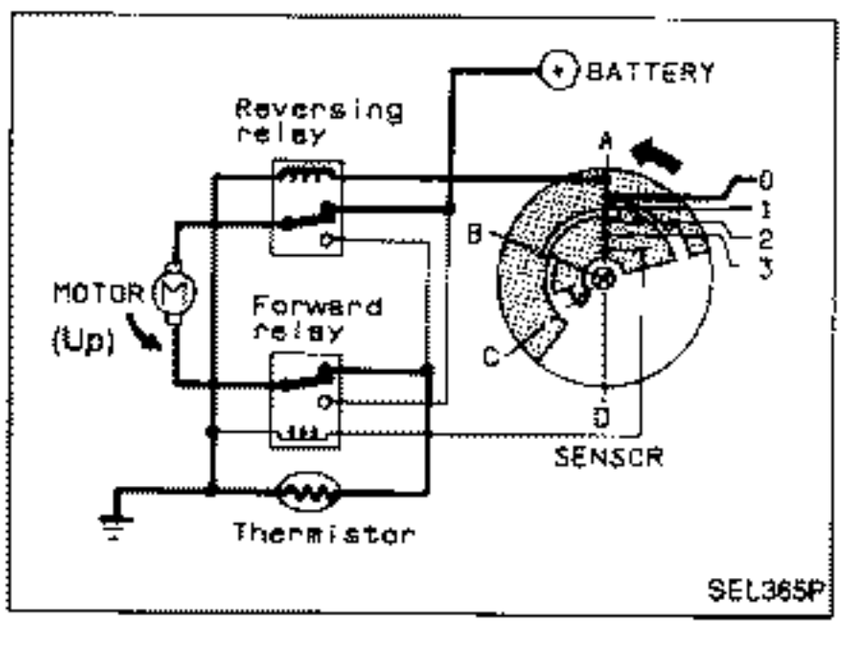

SEL365P

Aiming switch "1" → "0"

- When the aiming switch is moved from "1" to "0", power is applied to the motor through the relay operated by the conductive section of the sensor. The motor will rotate to move the headlamps in the "UP" direction.
- When the rotary unit of the sensor moves from point B to point A, the motor will stop.

Schematic

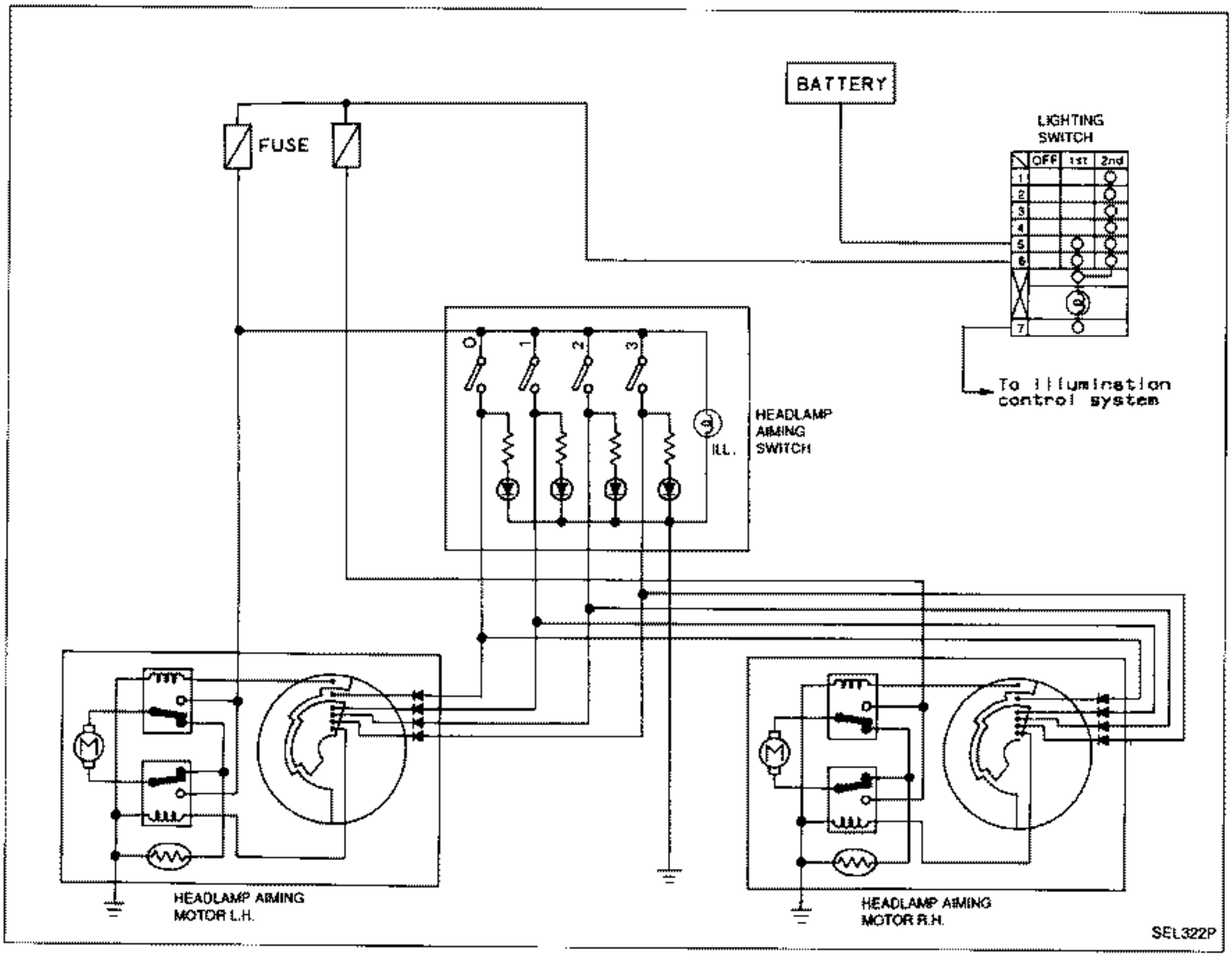
BATTERY
FUSE
LIGHTING SWITCH
OFF
1st
2nd
1
2
3
4
5
6
7
To illumination control system
0
1
2
3
ILL.
HEADLAMP AIMING SWITCH
HEADLAMP AIMING MOTOR L.H.
HEADLAMP AIMING MOTOR R.H.
SEL322P

Wiring Diagram

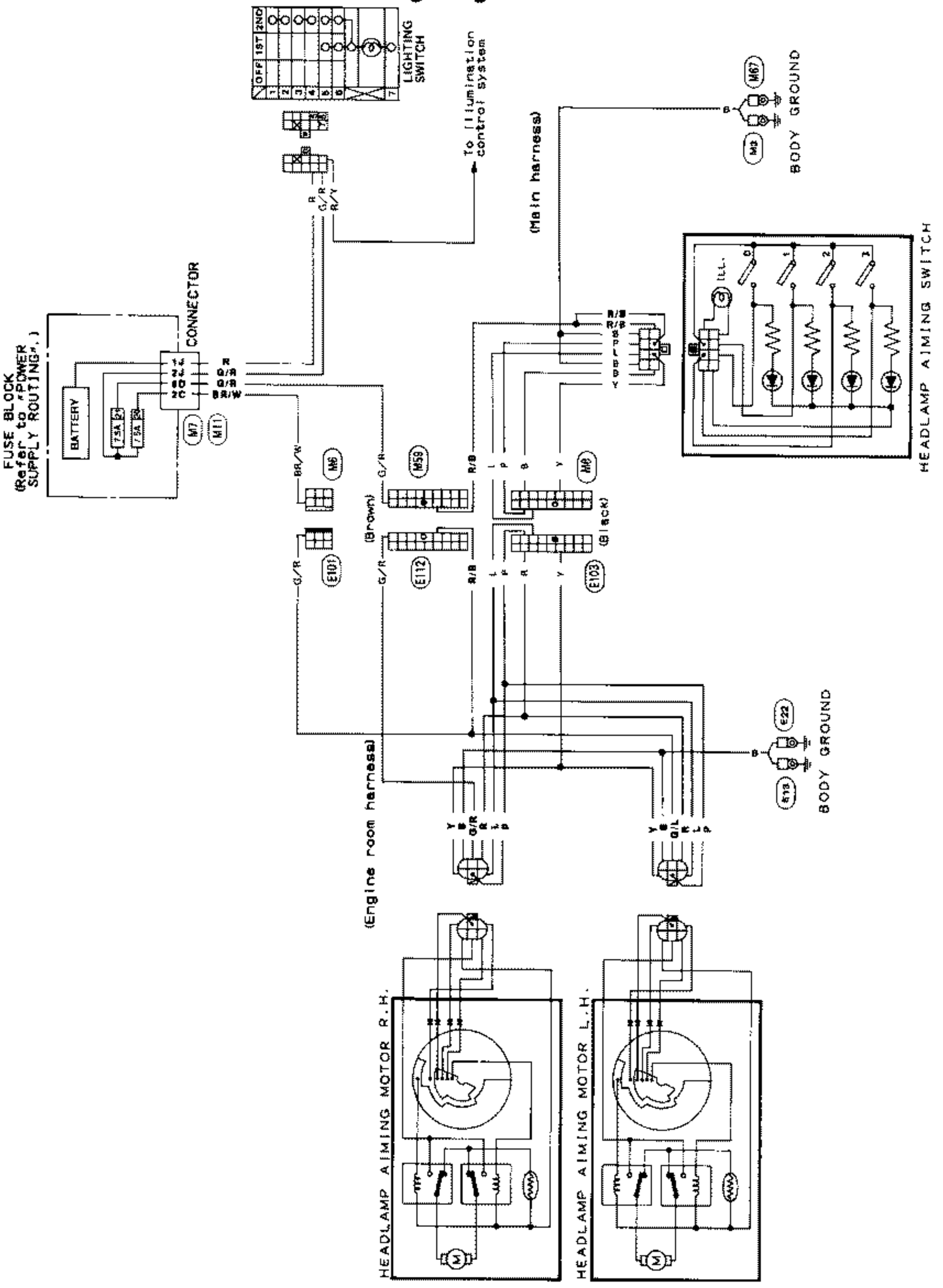

SEL323P

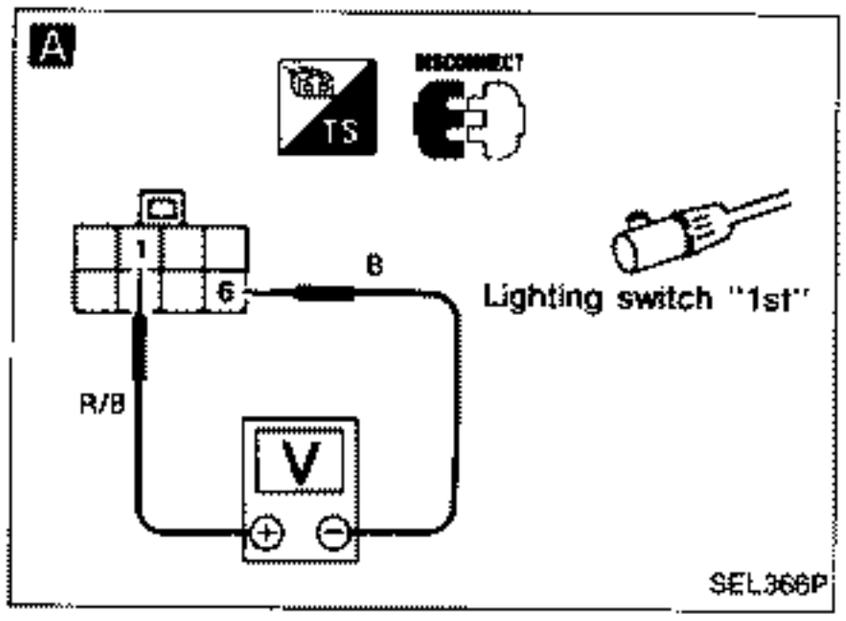

Trouble-diagnosis

SYMPTOM: Headlamp aiming does not operate.

A

POWER SUPPLY CIRCUIT CHECK (For aiming switch)
Check if 12 volts exist between terminals ① and ⑥.

Voltmeter terminals		Voltage [V]
(+)	(−)	
①	⑥	Approx. 12

N.G. → Check 7.5A fuse at fuse block. (Refer to "POWER SUPPLY ROUTING".)

O.K. ↓

B

AIMING SWITCH CHECK
Check continuity between terminals at each switch position

Switch position \ Terminal	①	②	③	④	⑤
0	○—○	○—○			
1	○—○		○—○		
2	○—○			○—○	
3	○—○				○—○

N.G. → Replace aiming switch.

O.K. ↓

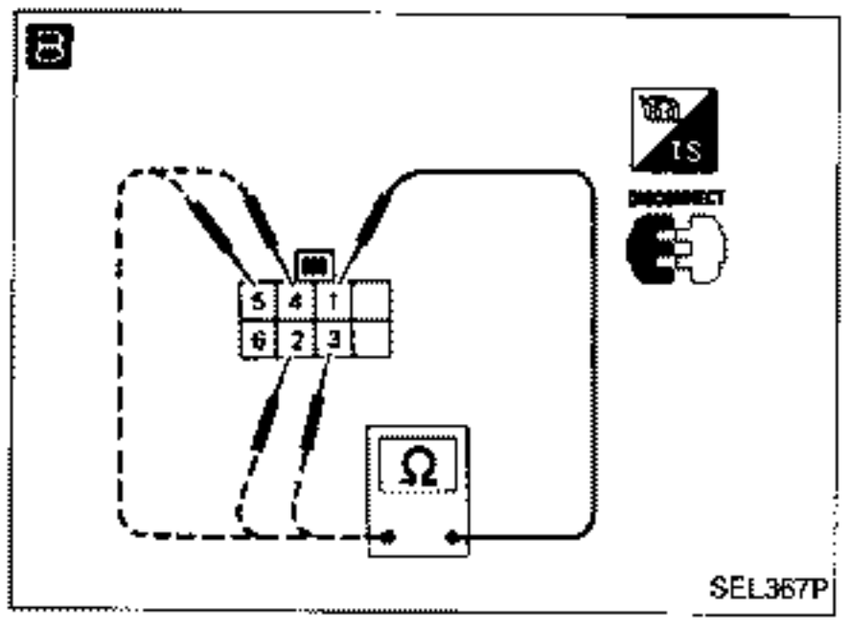

C

GROUND CIRCUIT CHECK FOR AIMING MOTOR
Check continuity between terminals ⑥ and body ground.
Continuity exists ... O.K.

N.G. → Repair harness between aiming motor and body ground.

O.K. ↓

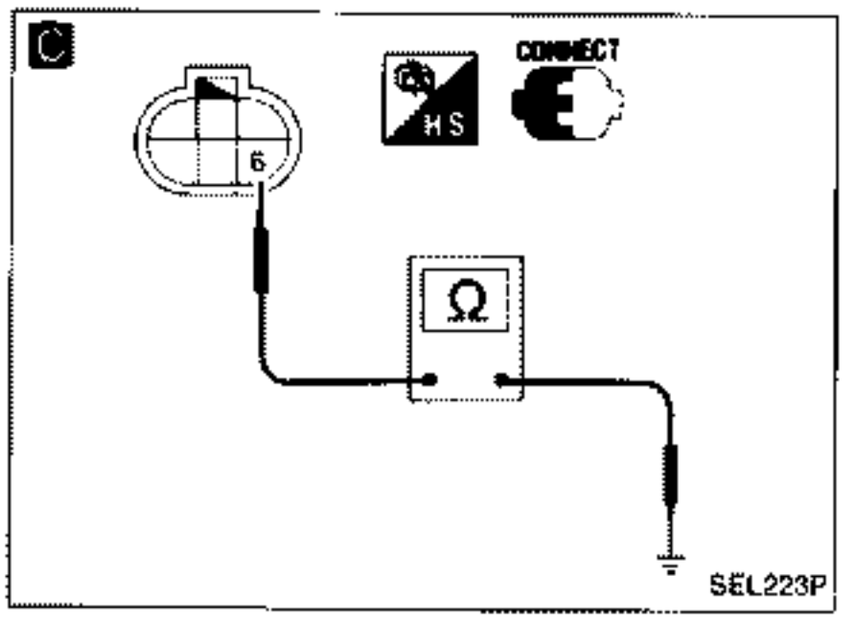

D

POWER SUPPLY CIRCUIT CHECK (For aiming motor unit)
Check if 12 volts exist between terminals ①, ②, ③, ④, ⑤ and ⑥.

Voltmeter terminals (+)	Voltmeter terminals (−)	Voltage [V]	Aiming switch position
①	⑥	Approx. 12	"0"
		0	Except "0"
②	⑥	Approx. 12	"1"
		0	Except "1"
③	⑥	Approx. 12	"2"
		0	Except "2"
④	⑥	Approx. 12	"3"
		0	Except "3"
⑤	⑥	Approx. 12	—

N.G. → Check harness between aiming switch and aiming motor unit

O.K. ↓

Replace aiming motor unit.

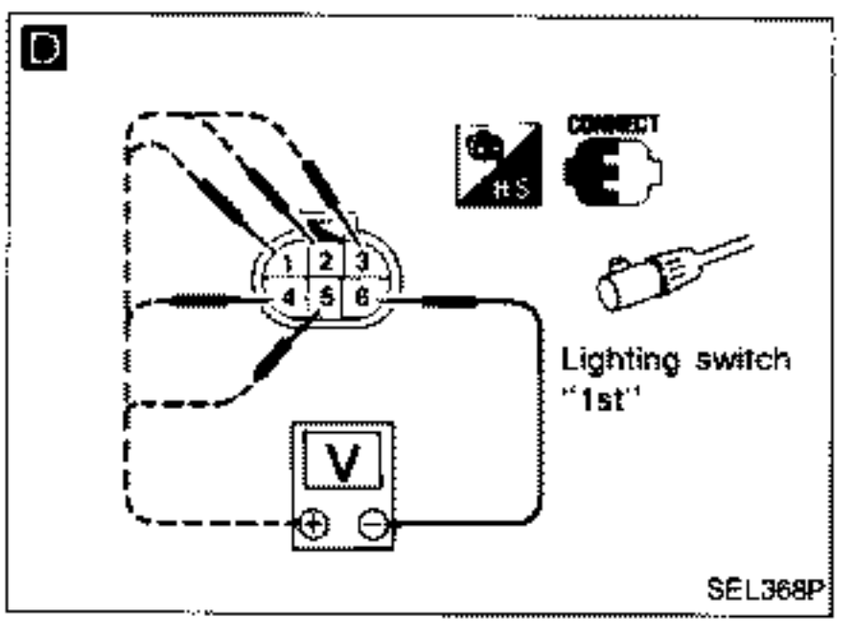

Bulb Replacement

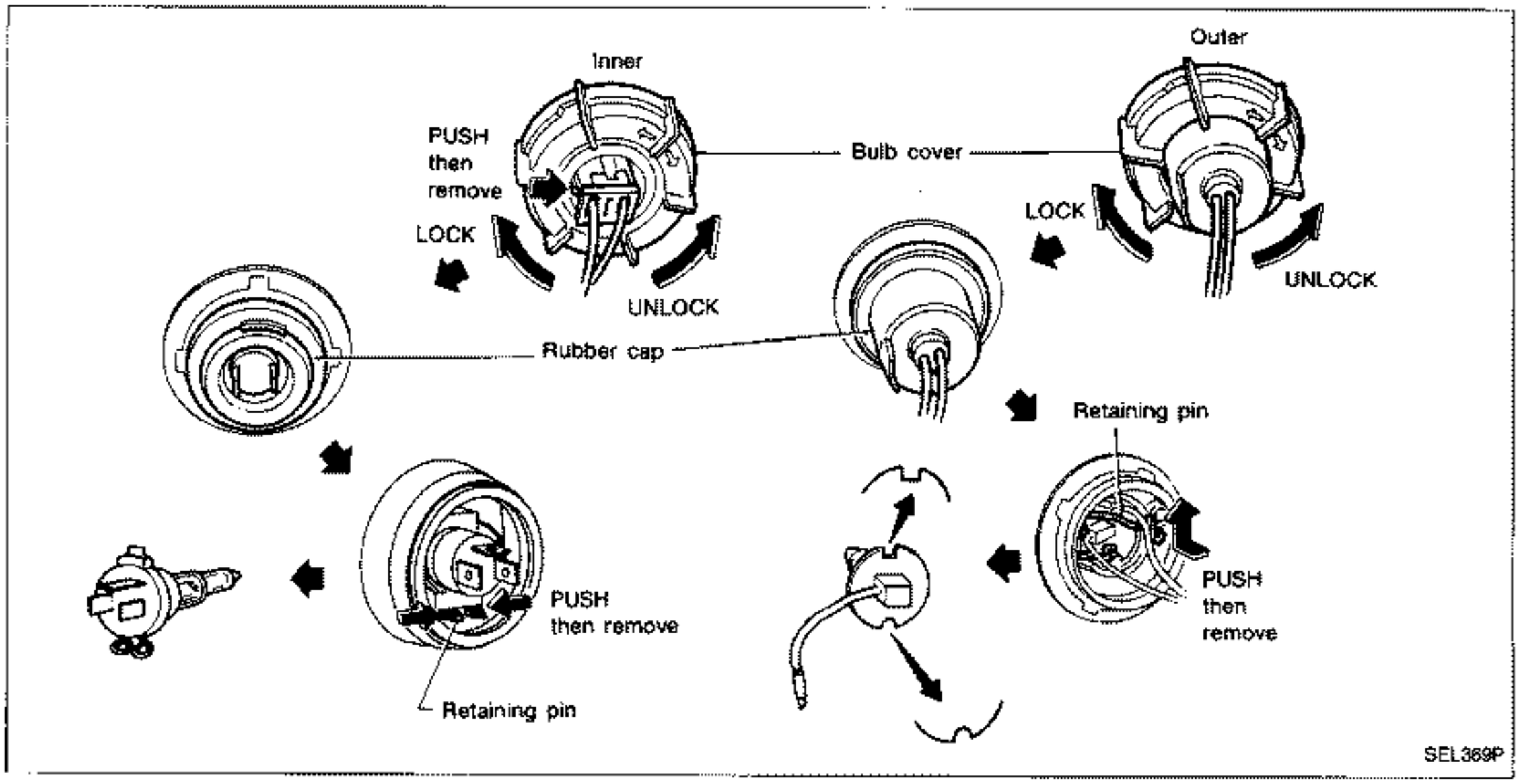

The headlamp is a semi-sealed beam type which uses a replaceable halogen bulb. The bulb can be replaced from the engine compartment side without removing the headlamp body.

- **Grasp only the plastic base when handling the bulb. Never touch the glass envelope.**

1. Disconnect the battery cable.
2. Disconnect harness connector from rear end of bulb. (Inner)
3. Turn bulb cover counterclockwise, then remove it.
4. Pull off rubber cap.
5. Push and turn retaining pin to loosen it.
6. Remove headlamp bulb. Do not shake or rotate bulb when removing it.
7. Disconnect harness connector. (Outer)
8. Install in the reverse order of removal.

CAUTION:

- **Do not leave the bulb out of the headlamp reflector for a long period of time as dust, moisture, smoke, etc. may enter the headlamp body and affect the performance of the headlamp. Thus, the headlamp bulb should not be removed from the headlamp reflector until just before a replacement bulb is to be installed.**
- **Use the same wattage as originally installed:**

	Inside (High beam)	Outside (Low beam)
Wattage (W)	55	55

Aiming Adjustment

When performing headlamp aiming adjustment, use an aiming machine,aiming wall screen or headlamp tester. For operating instructions of any aimer, it should be in good repair, calibrated and used according to respective operation manuals supplied with the unit.
If any aimer is not available, aiming adjustment can be done as follows:

For details, refer to the regulations in your own country.

CAUTION:

a. **Keep all tires inflated to correct pressures.**
b. **Place vehicle and tester on one and same flat surface.**
c. **See that there is no-load in vehicle (coolant, engine oil filled up to correct level and full fuel tank) other than the driver (or equivalent weight placed in driver's position).**

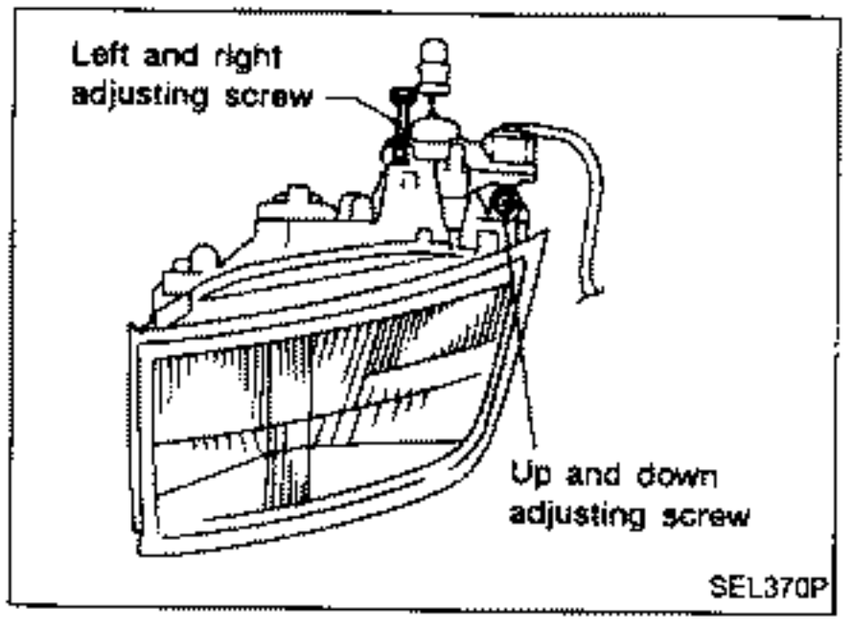

LOW BEAM

1. Turn headlamp low beam on.
2. Use adjusting screws to perform aiming adjustment.

- **First tighten the adjusting screw all the way and then make adjustment by loosening the screw.**

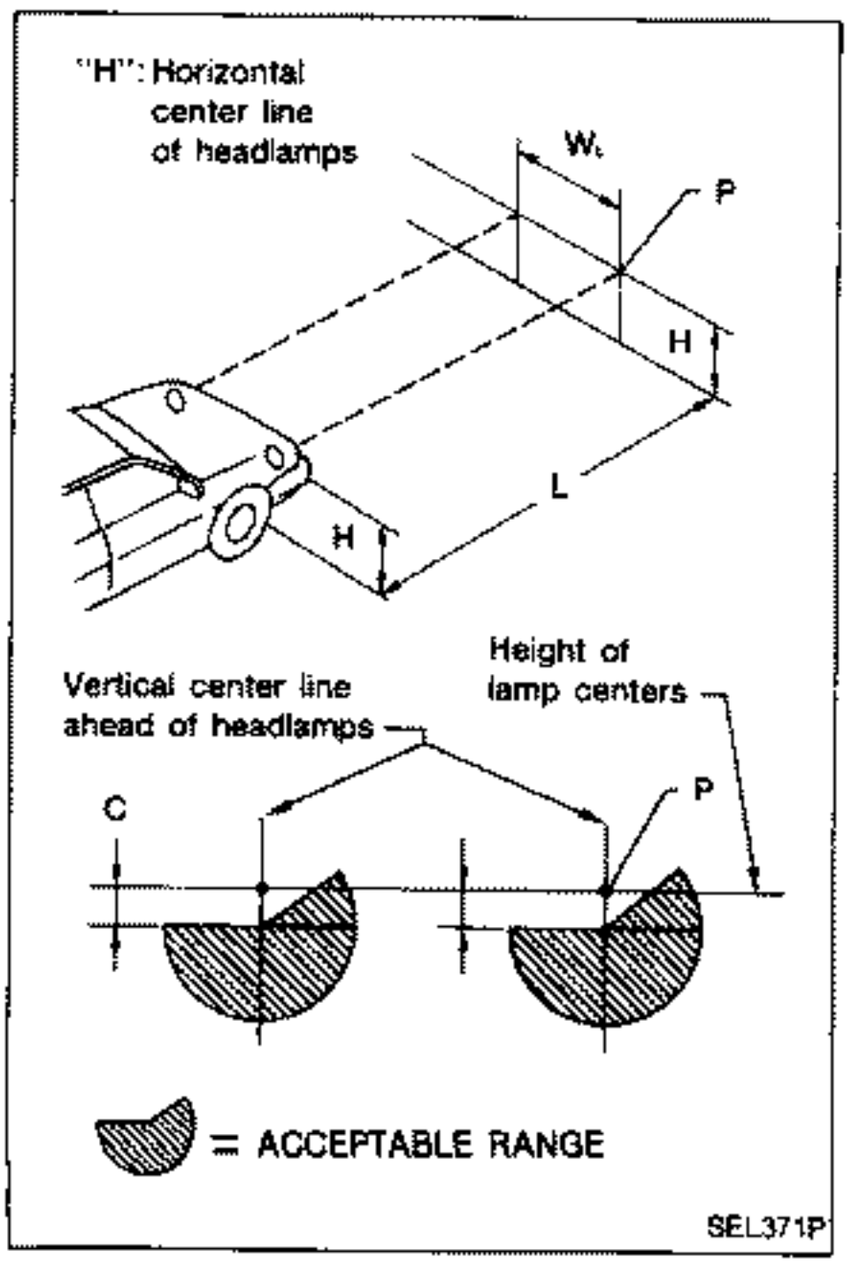

a. **Adjust headlamps so that main axis of light is parallel to center line of body and is aligned with point P shown in illustration.**
b. **Figure to the left shows headlamp aiming pattern for driving on right side of road; for driving on left side of road, aiming pattern is reversed.**
c. **Dotted lines in illustration show center of headlamp.**

"H": Horizontal center line of headlamps
"W_L": Distance between each headlamp center
"L": 5,000 mm (196.85 in)
"C": 50 mm (1.97 in)

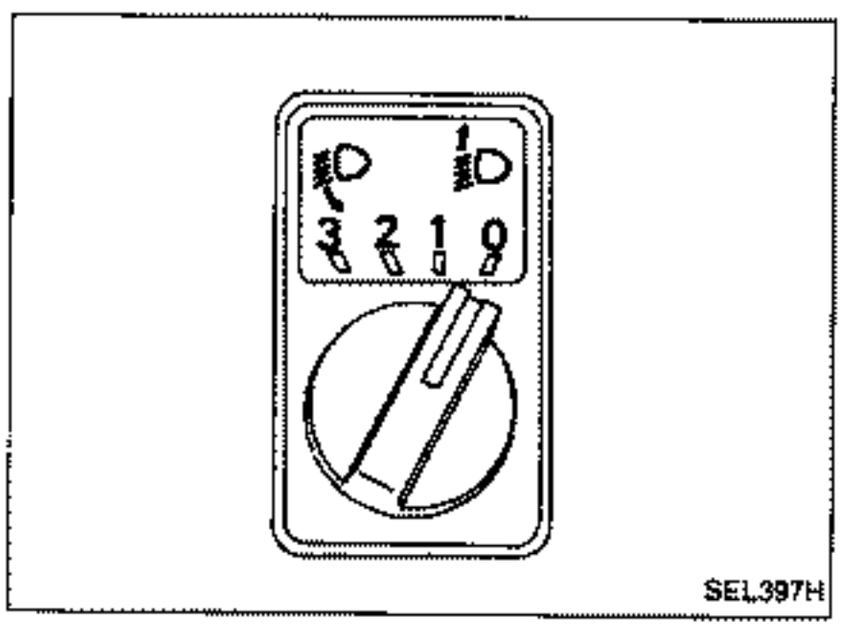

Aiming Adjustment (Cont'd)

CAUTION:
Be sure aiming switch is set to "0" when performing aiming adjustment on vehicles equipped with headlamp aiming control.

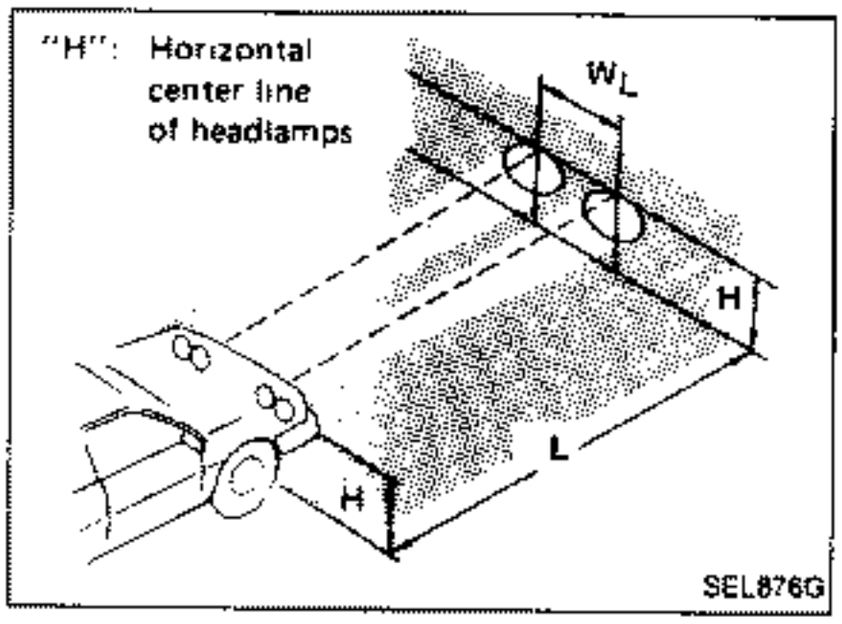

HIGH BEAM

Turn headlamp high beam on.

a. Adjust high beams so that main axis of light is parallel to center line of body.
b. Dotted lines in illustration show center of headlamp.
"H": Horizontal center line of headlamps
"W_L": Distance between each headlamp center
"L": 5,000 mm (196.85 in)

Clearance, License, Tail and Stop Lamps/Wiring Diagram

L.H. DRIVE MODELS

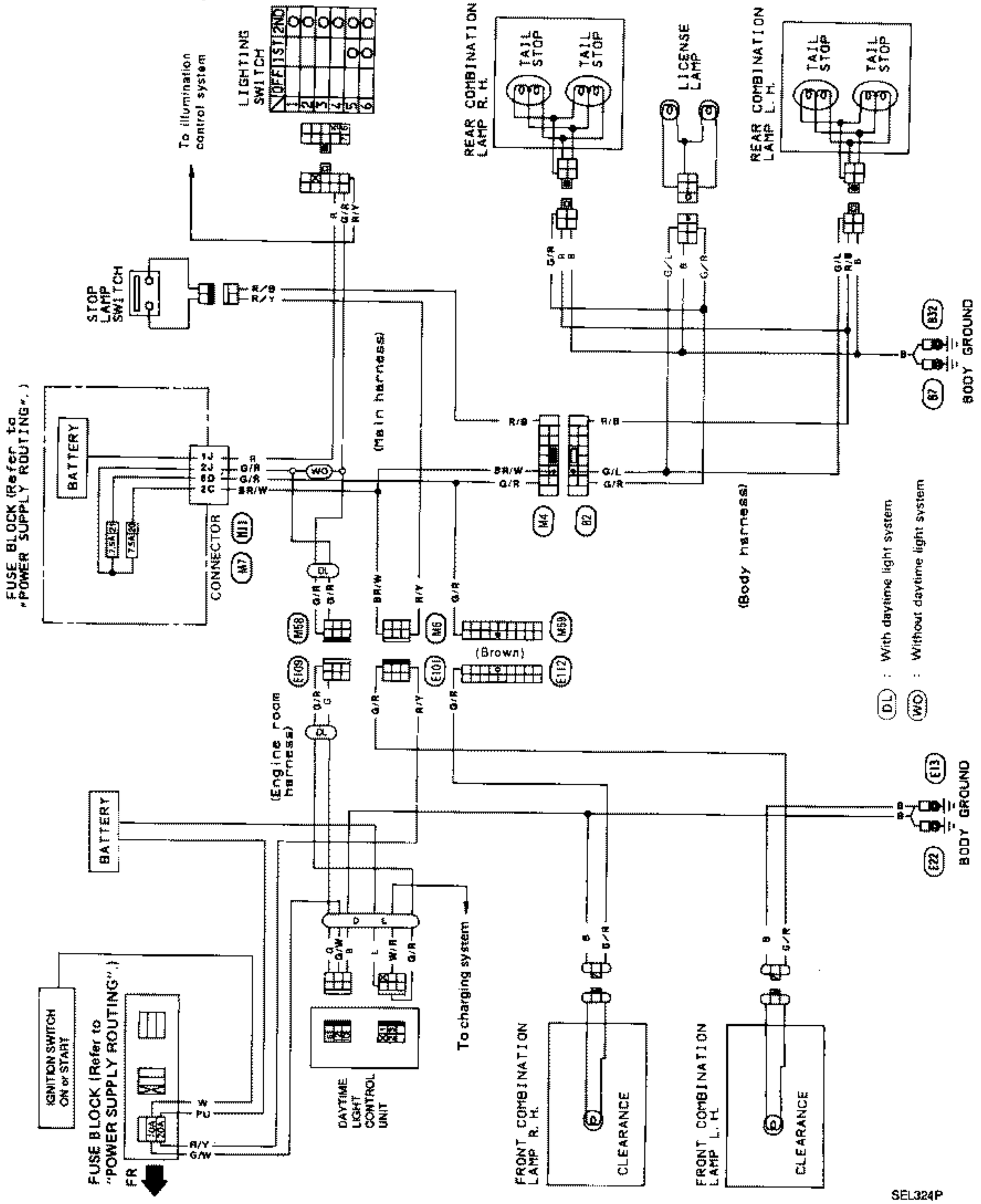

Clearance, License, Tail and Stop Lamps/Wiring Diagram (Cont'd)

R.H. DRIVE MODELS

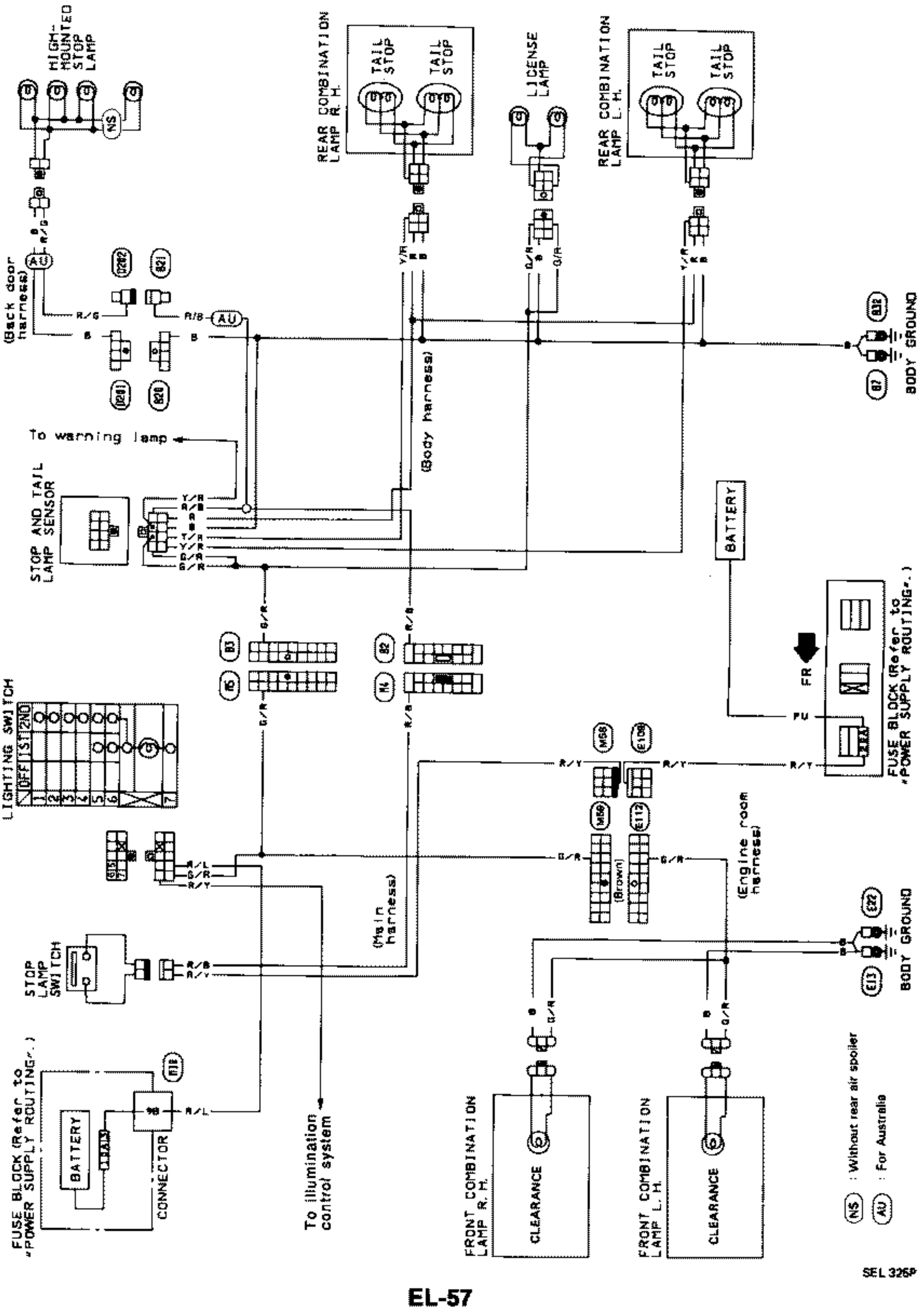

Back-up Lamp/Wiring Diagram

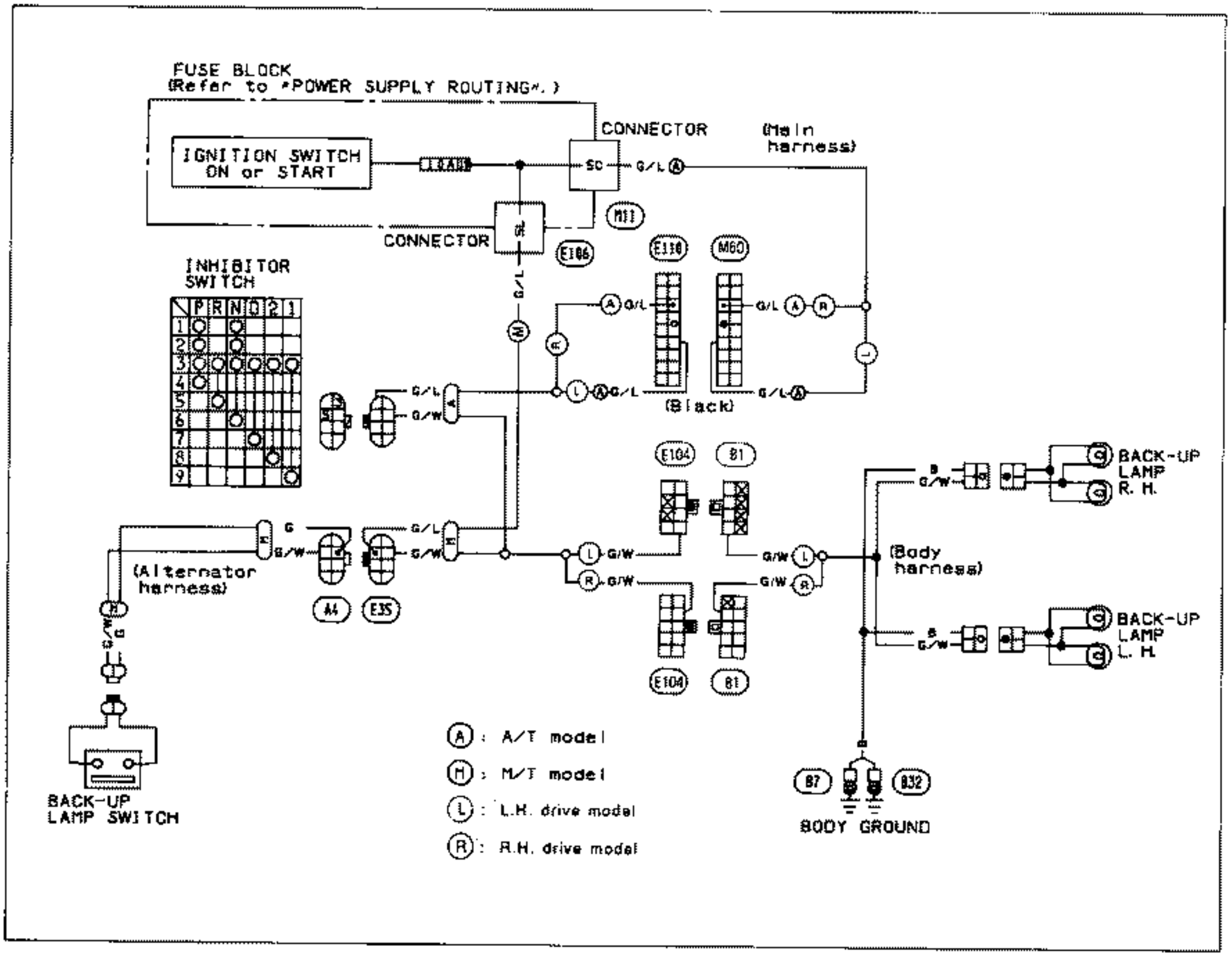

Turn Signal and Hazard Warning Lamps/Wiring Diagram

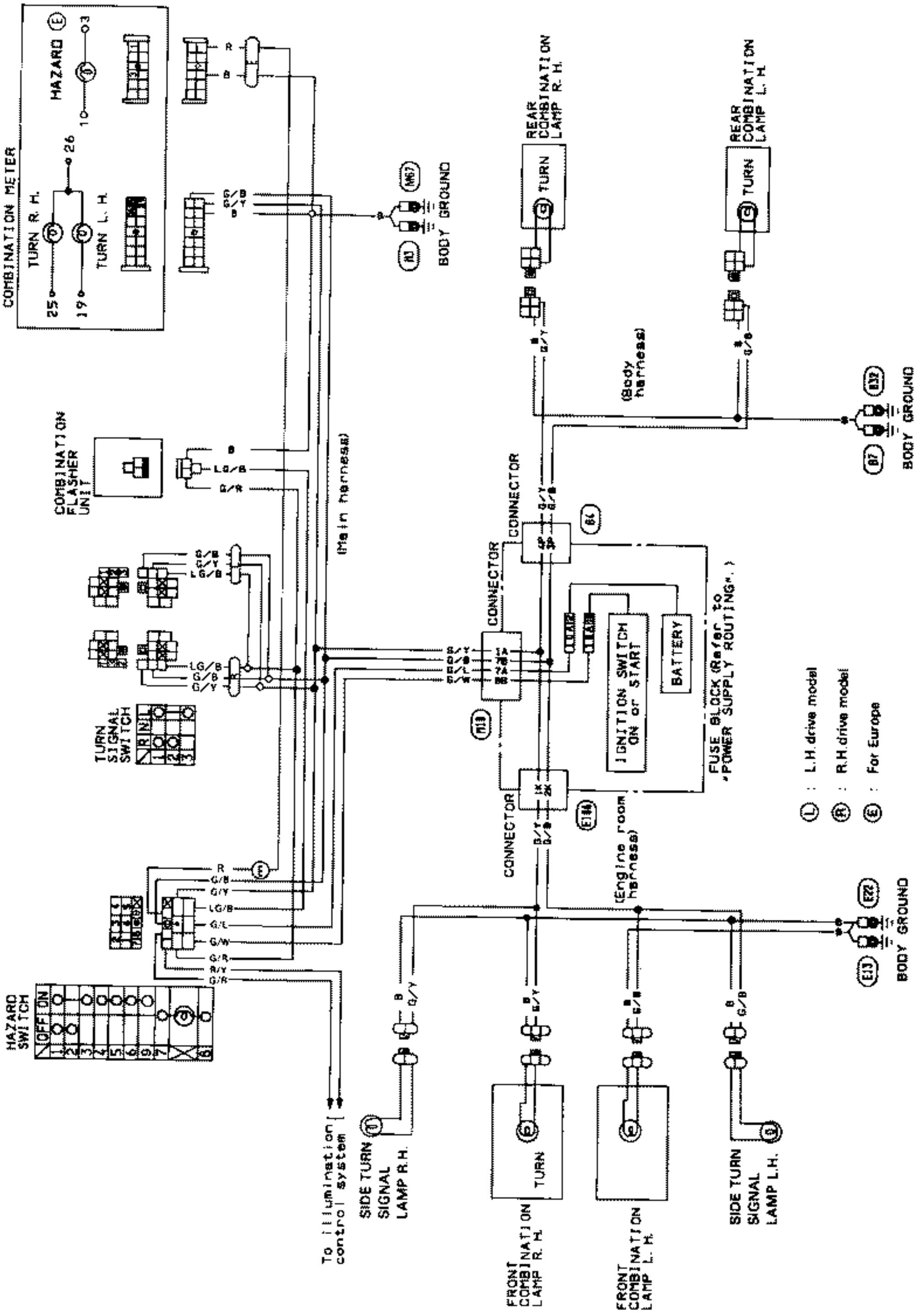

SEL327P

Rear Fog Lamp/Wiring Diagram

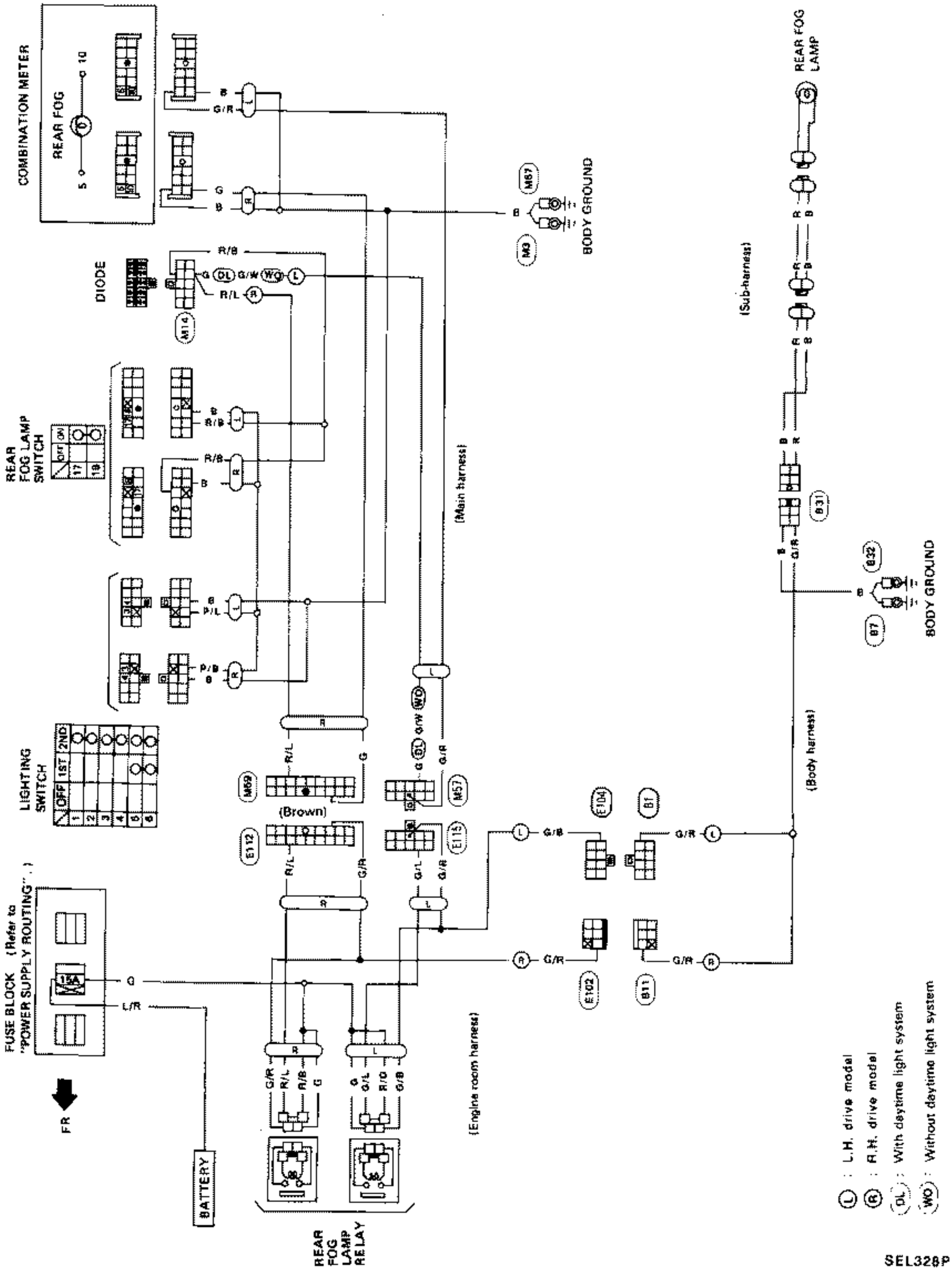

SEL328P

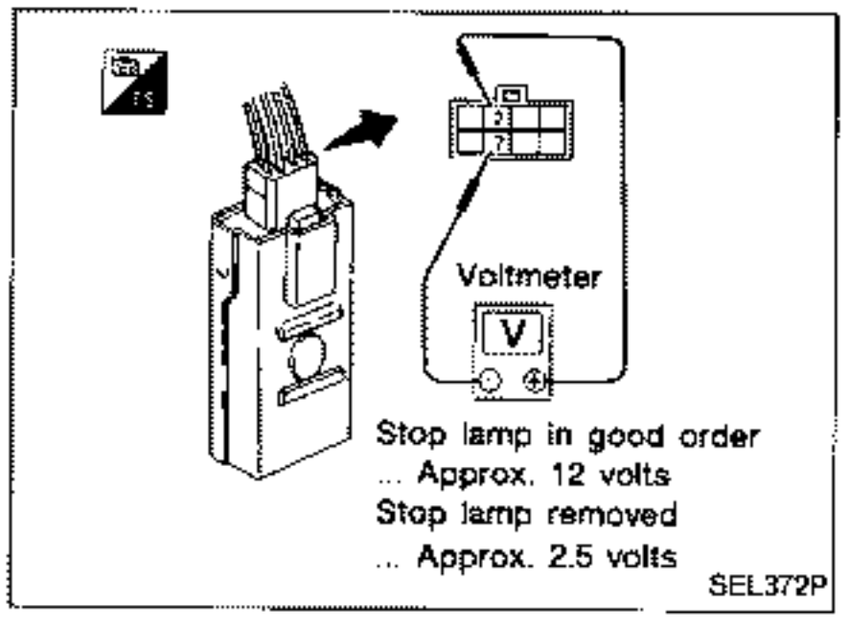

Stop and Tail Lamp Sensor Check

- Before checking, ensure that bulbs meet specifications.

STOP LAMP

1. Start engine.
2. Stop lamp switch on.

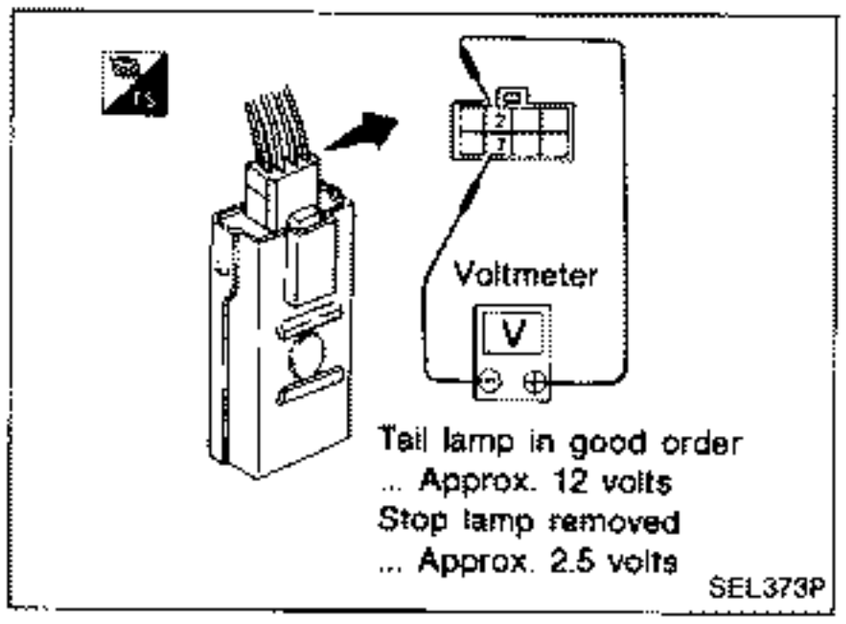

Tail Lamp

1. Start engine.
2. Lighting switch on.

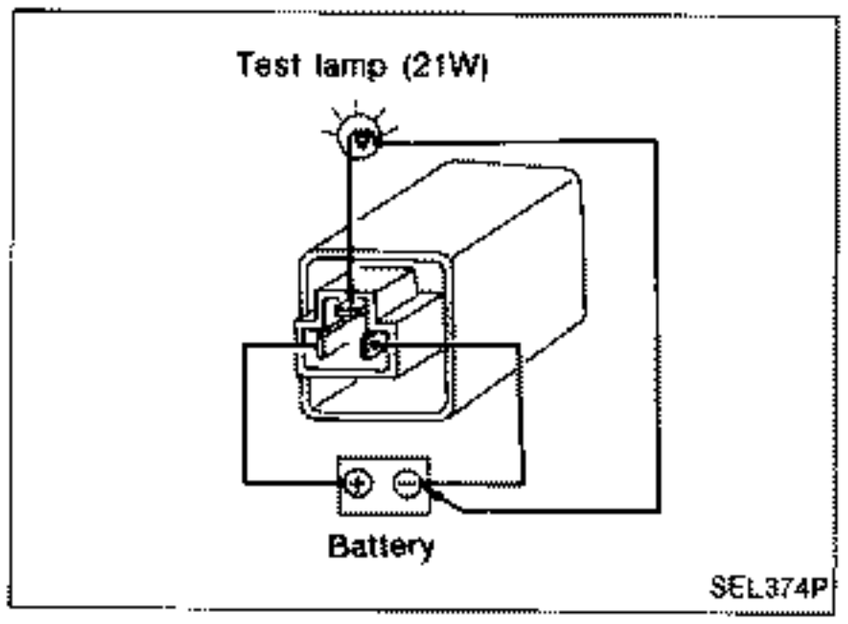

Combination Flasher Unit Check

- Before checking, ensure that bulbs meet specifications.
- Connect a battery and test lamp to the combination flasher unit, as shown. Combination flasher unit is properly functioning if it blinks when power is supplied to the circuit.

Bulb Specifications

	Wattage (W)
Front combination lamp	
Turn signal	21
Clearance	5
Side turn signal lamp	5
Rear combination lamp	
Turn signal	21
Stop/Tail	21/5
Back-up lamp	21
License plate lamp	5
Rear fog lamp	21
High-mounted stop lamp	13
Interior lamp	10
Spot lamp	3.8
Luggage room lamp	3.4

Illumination/Wiring Diagram

L.H. DRIVE MODELS

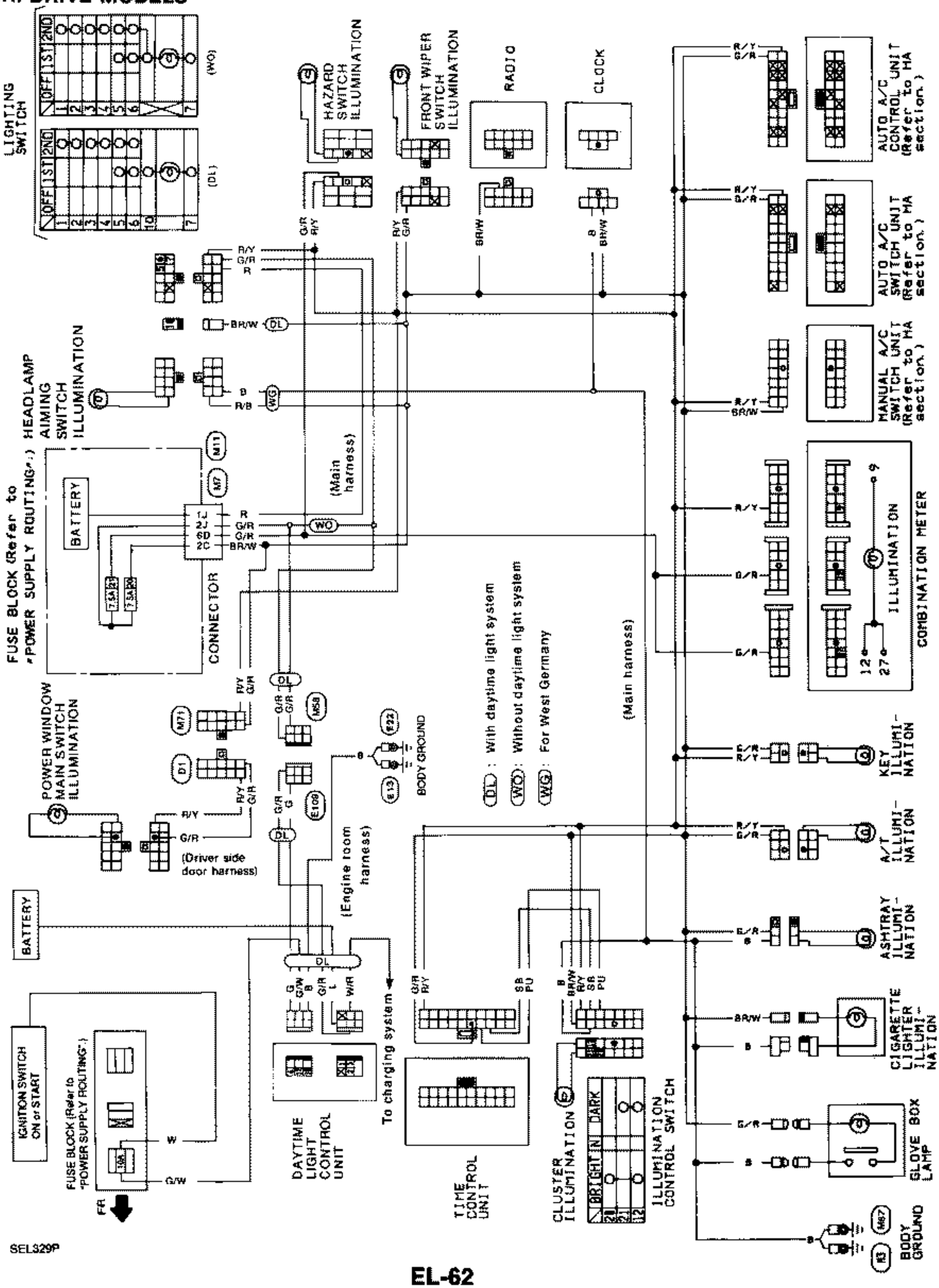

SEL329P

Illumination/Wiring Diagram (Cont'd)

R.H. DRIVE MODELS

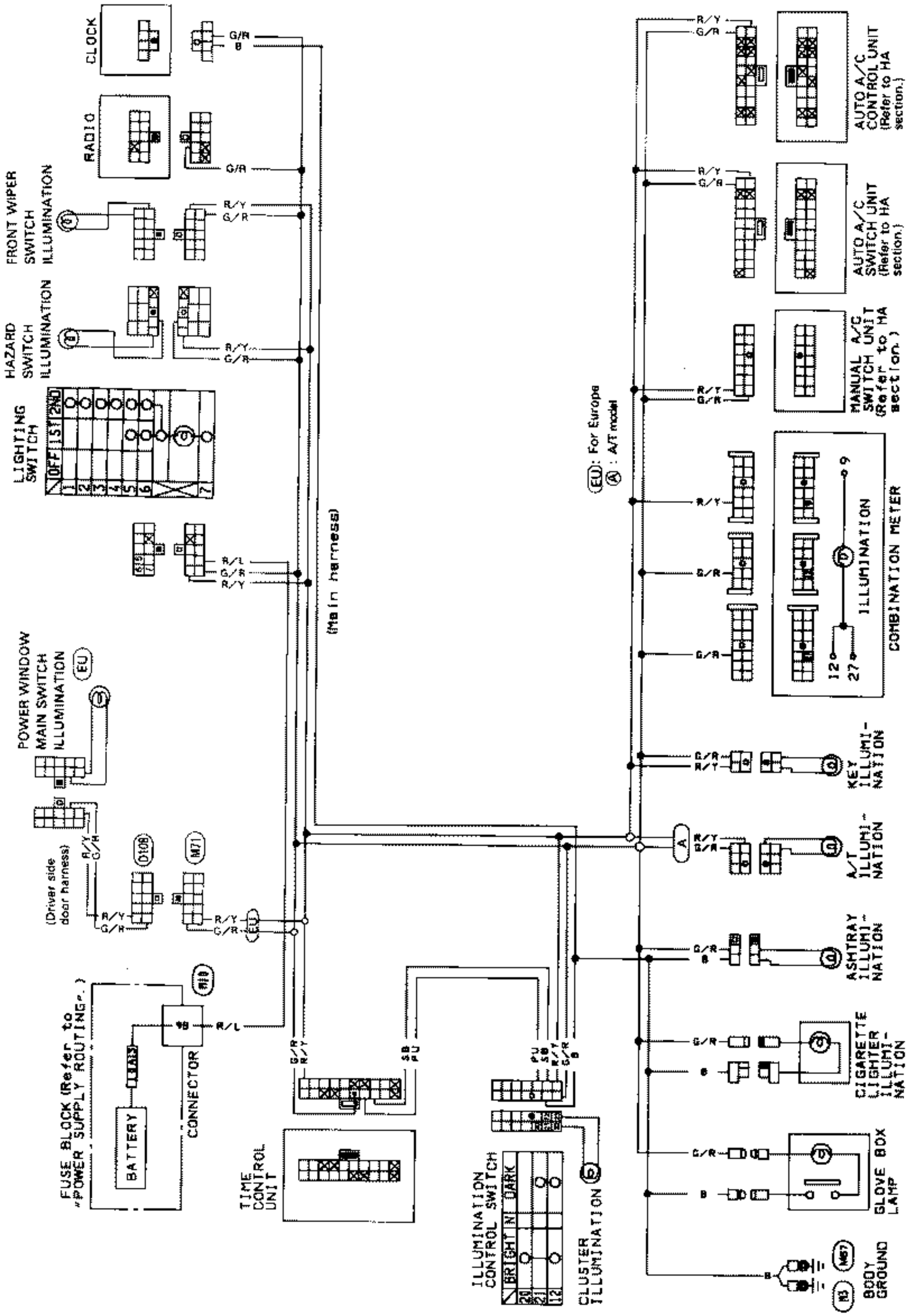

SEL412P

Interior Lamp/Wiring Diagram

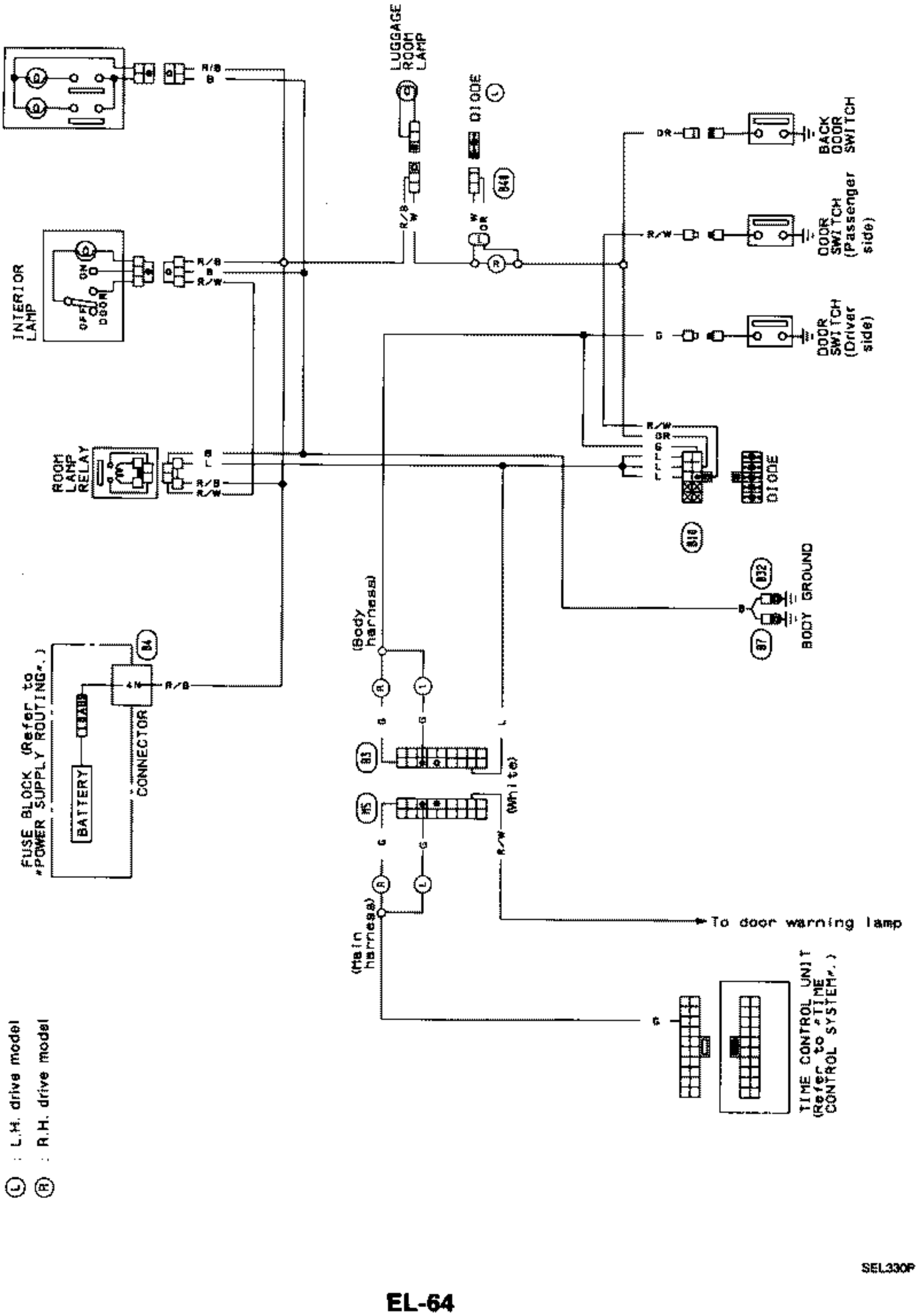

SEL330P

Combination Meter

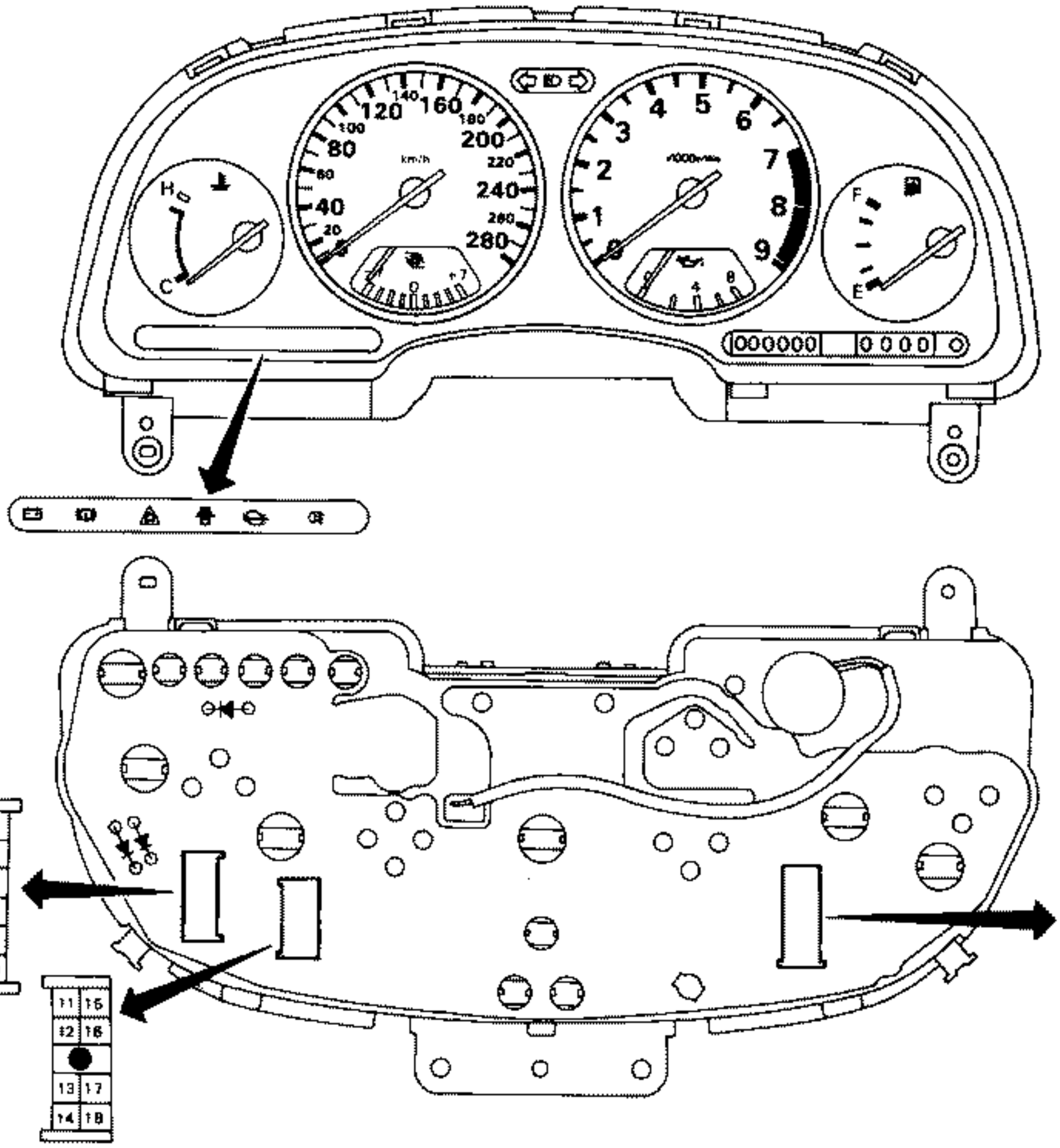

(EU) : For Europe
(AU) : For Australia
(TC) : Turbo model

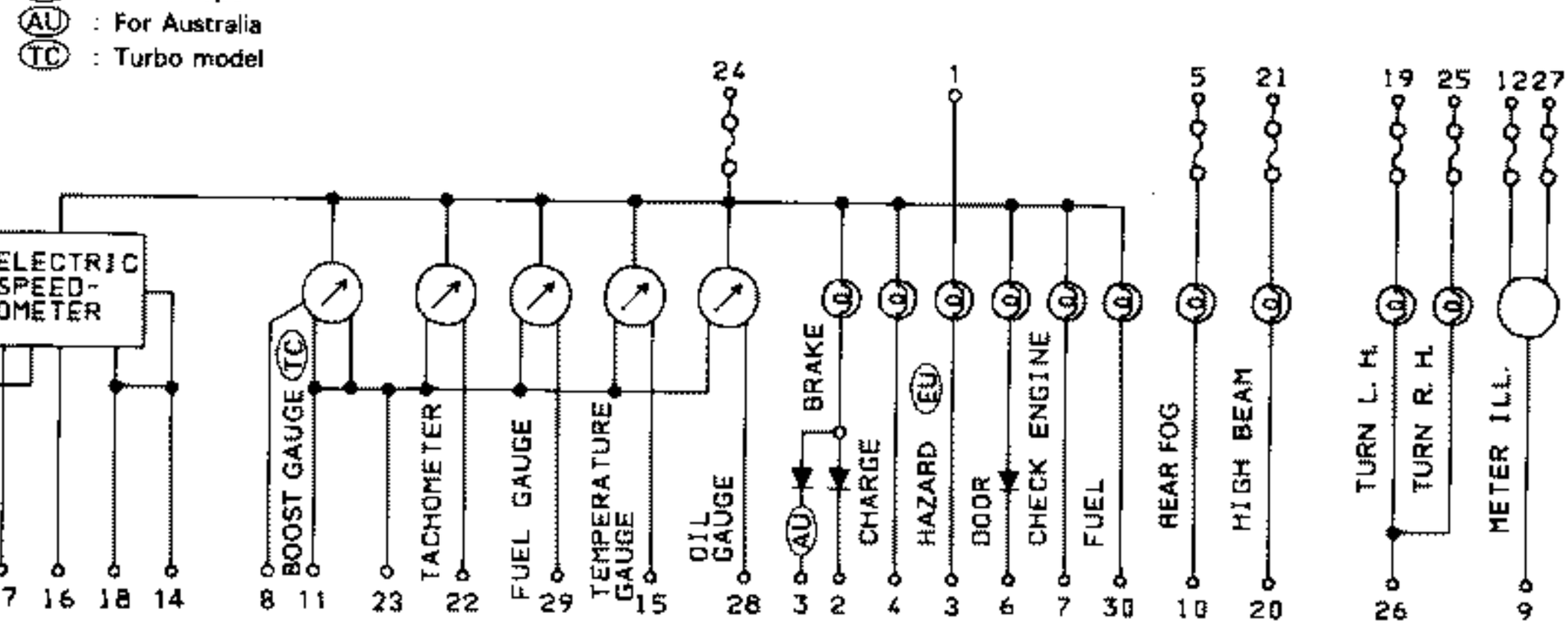

SEL331P

Tachometer, Temp., Oil, Fuel and Boost Gauges/Wiring Diagram

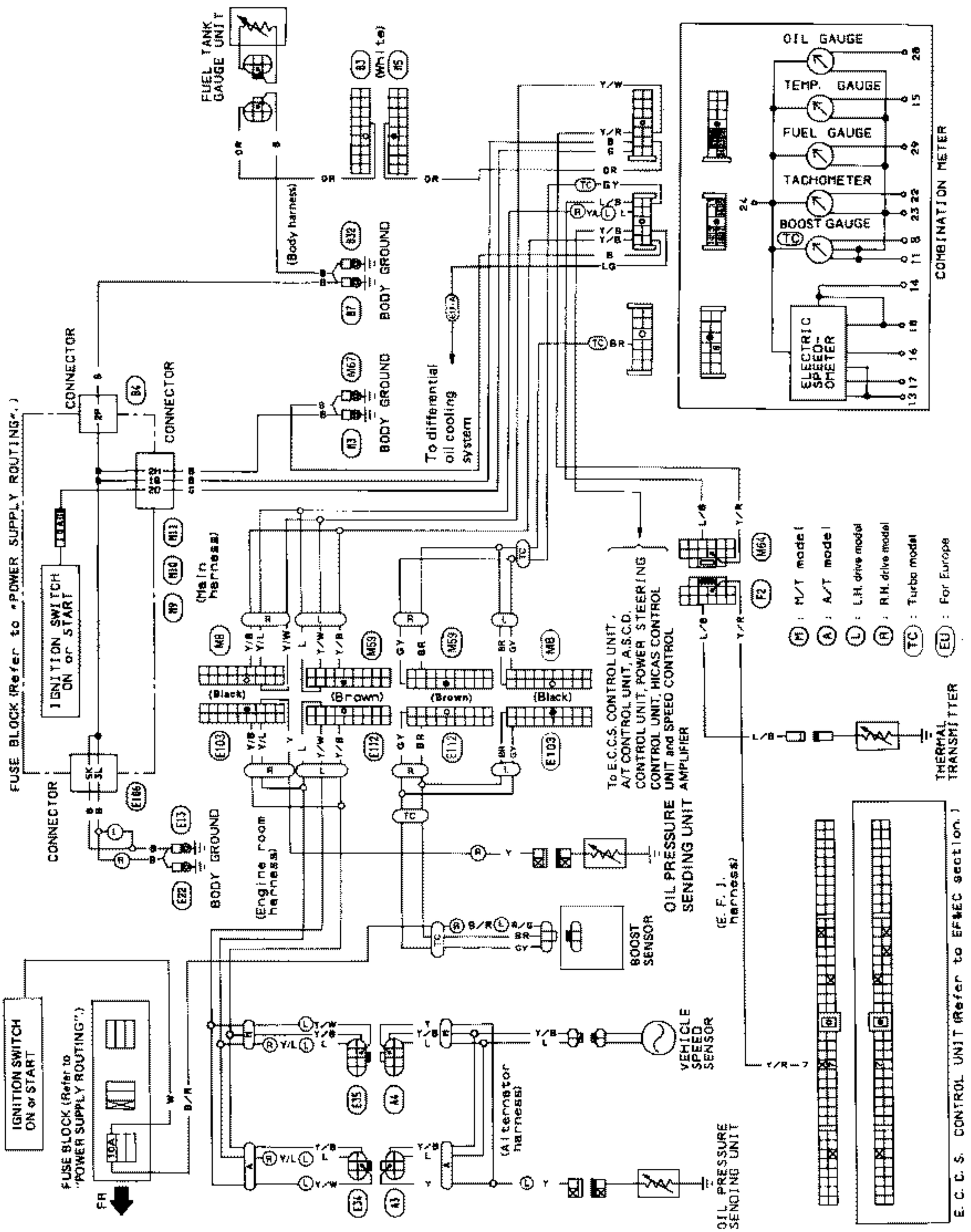

SEL332P

Inspection/Fuel, Oil Pressure and Water Temperature Gauges

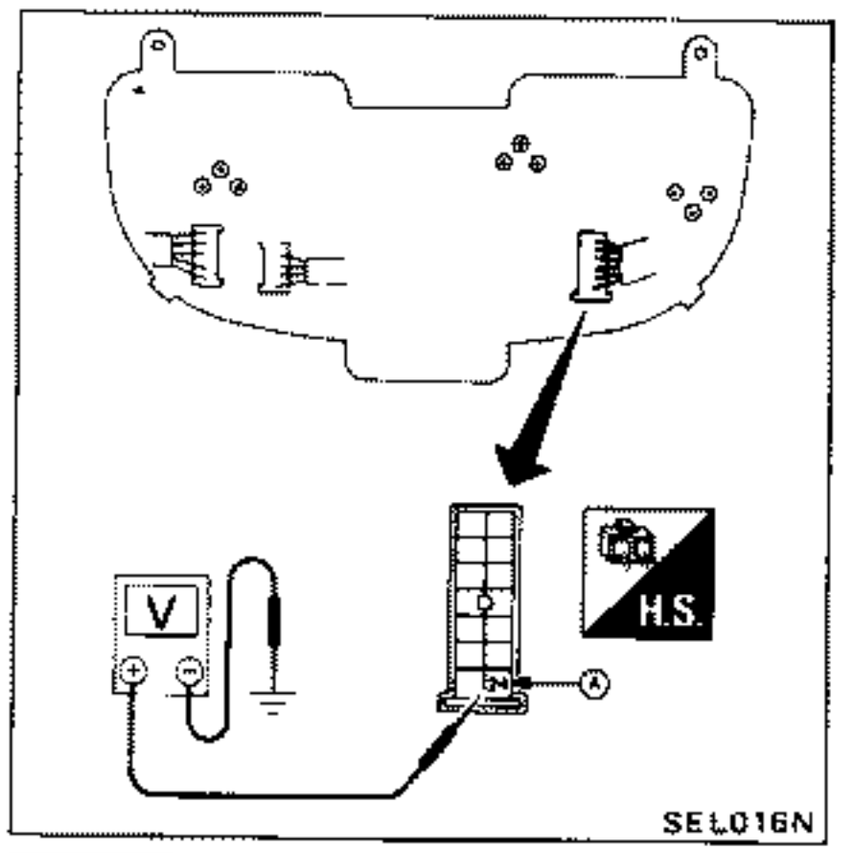

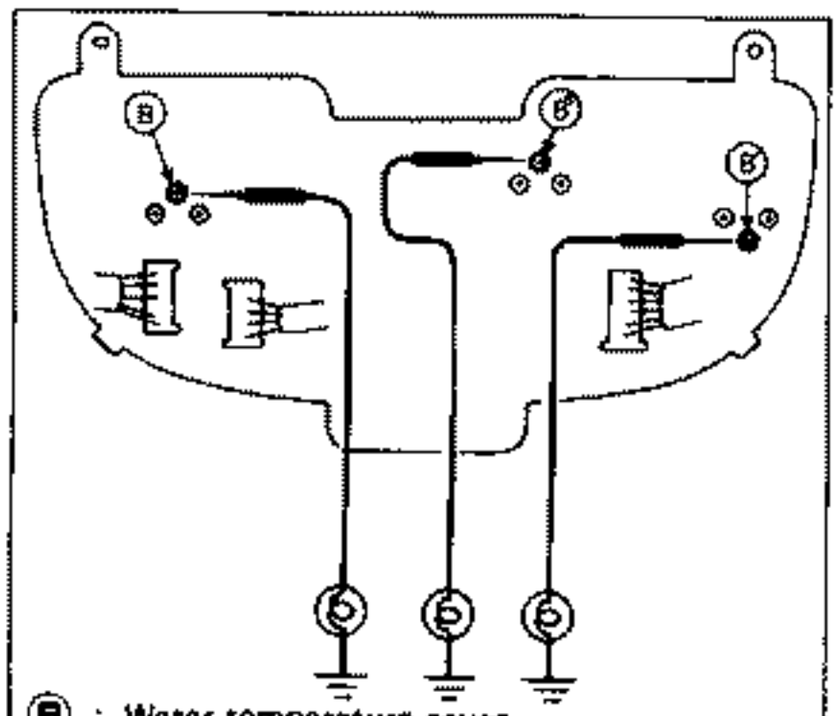

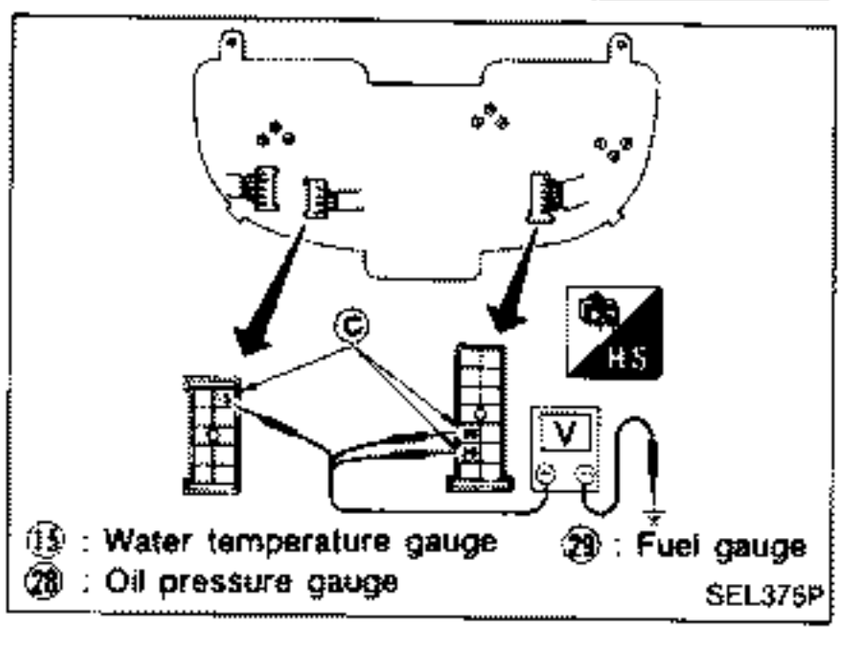

INSPECTION START

O.K.

CHECK POWER SOURCE
1) Turn ignition switch "ON".
2) Check voltage between terminal Ⓐ and ground.
Battery voltage should exist.

N.G. → Check the following items.
1) Harness continuity between battery terminal and combination meter
2) Ignition relay
3) Fusible link and fuse
4) Ignition switch

O.K.

CHECK GAUGE OPERATION
1) Turn ignition switch "ON".
2) Connect terminal Ⓑ and ground with wire through 3.4 W test bulb.
3) Check operation of gauge.
Gauge should move smoothly to full scale.

N.G. → Repair or replace gauge.

O.K.

Check harness continuity between component and combination meter Ⓒ.

N.G. → Repair or replace.

O.K.

CHECK COMPONENT
Check gauge units and harness.
Refer to "Fuel Tank Gauge Unit Check", "Thermal Transmitter Check".

N.G. → Repair or replace.
Refer to FE section. (Fuel tank gauge unit)

O.K.

Reinstall any part removed.

INSPECTION END

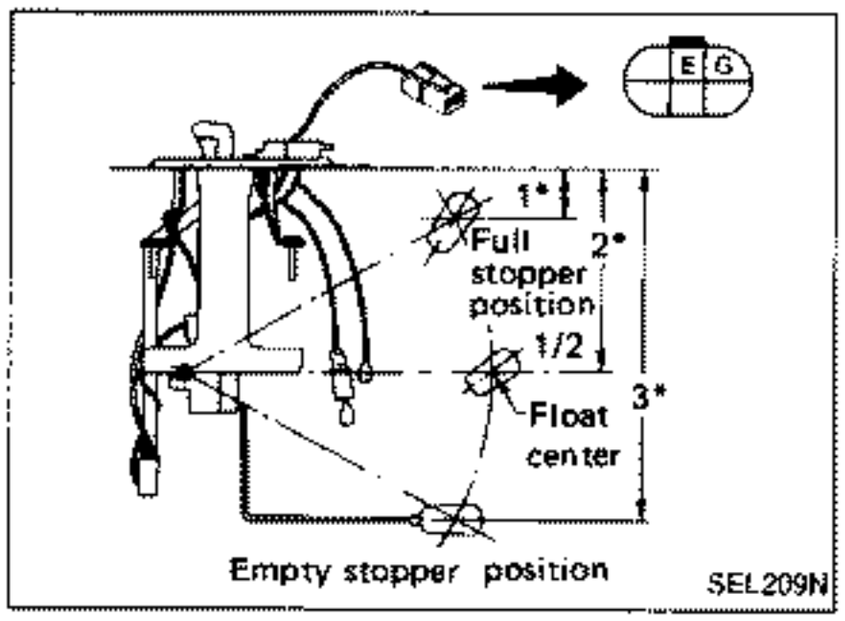

Fuel Tank Gauge Unit Check

- For removal, refer to FE section.

Check the resistance between terminals Ⓖ and Ⓔ.

Ohmmeter (+)	Ohmmeter (−)	Float position mm (in)			Resistance value (Ω)
G	E	1*	Full	21.0 (0.827)	4.3 - 5.8
		2*	1/2	115.0 (4.53)	27.7 - 34.3
		3*	Empty	207.0 (8.15)	78.3 - 84.8

1* and 3*: When float rod is in contact with stopper.

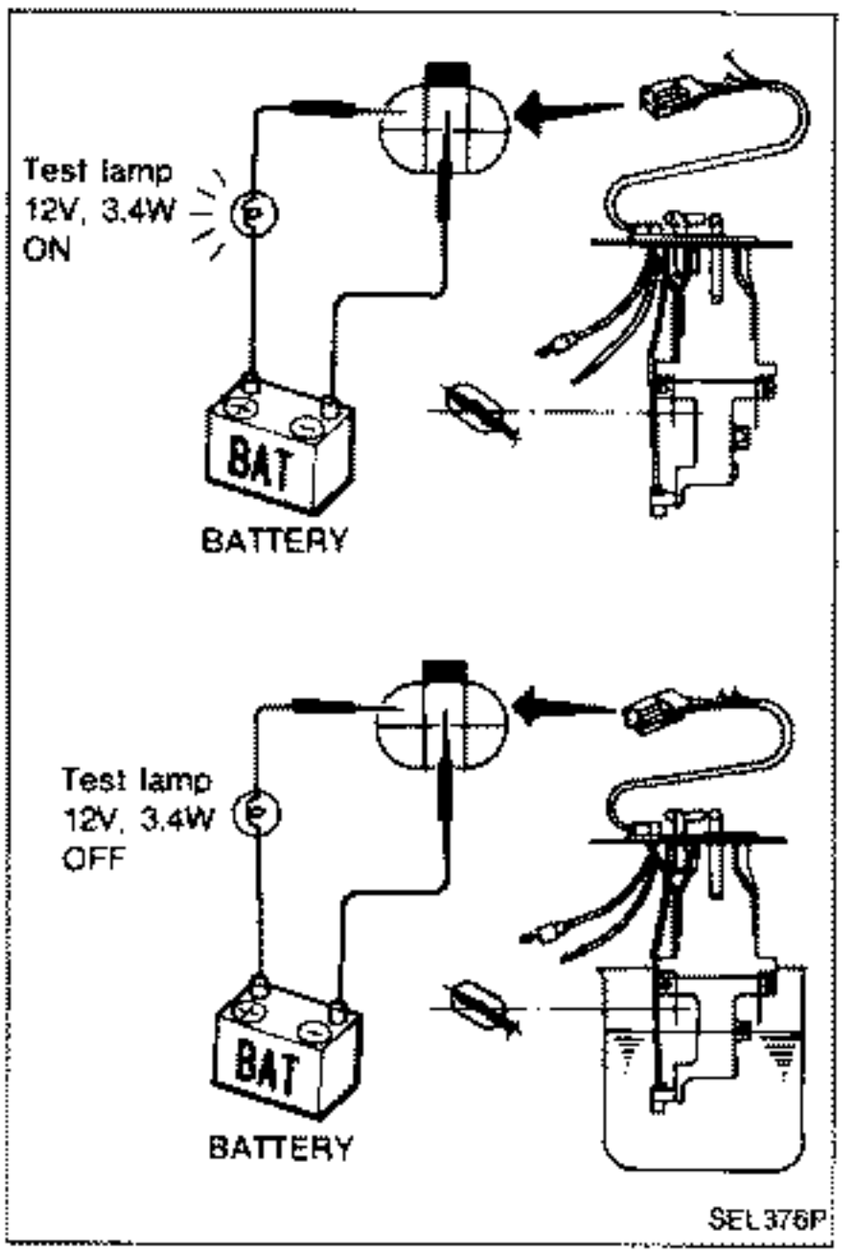

Fuel Warning Lamp Sensor Check

- It will take a short time for the bulb to light.

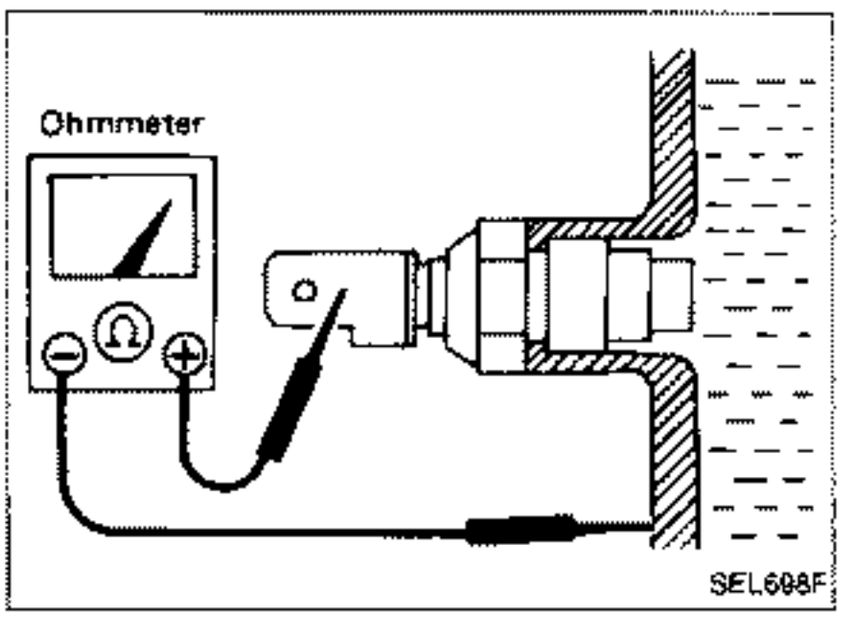

Thermal Transmitter Check

Check the resistance between the terminals of thermal transmitter and body ground.

Water temperature	Resistance
60°C (140°F)	Approx.70 - 90Ω
100°C (212°F)	Approx. 21 - 24Ω

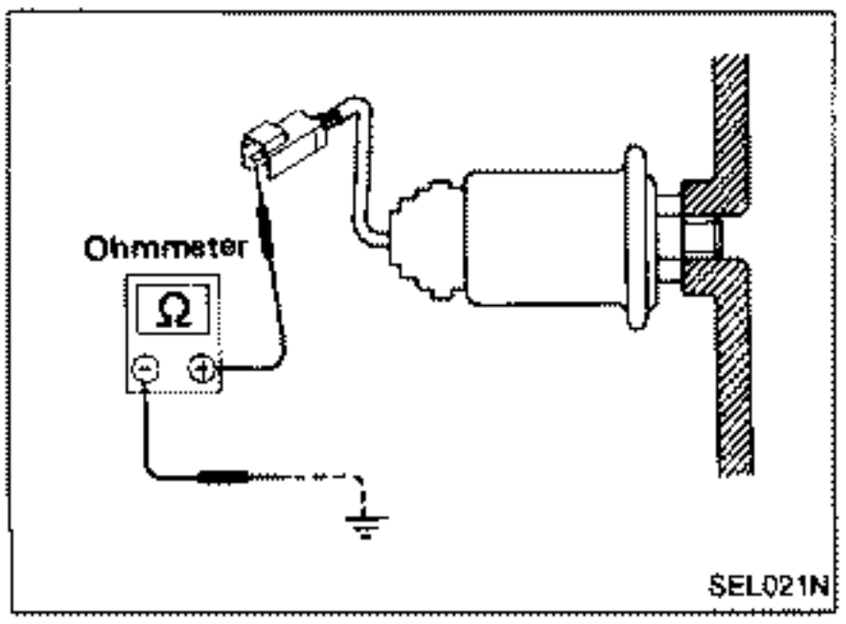

Oil Pressure Sending Unit Check

Check the resistance between the terminals of oil pressure sending unit and body ground.

Oil pressure kPa (bar, kg/cm², psi)	Resistance value (Ω)
0 (0, 0, 0) (Engine is stopped)	More than 54
392 (3.9, 4, 57)	Approx. 26 - 37
588 (5.9, 6, 85)	Approx. 18 - 26

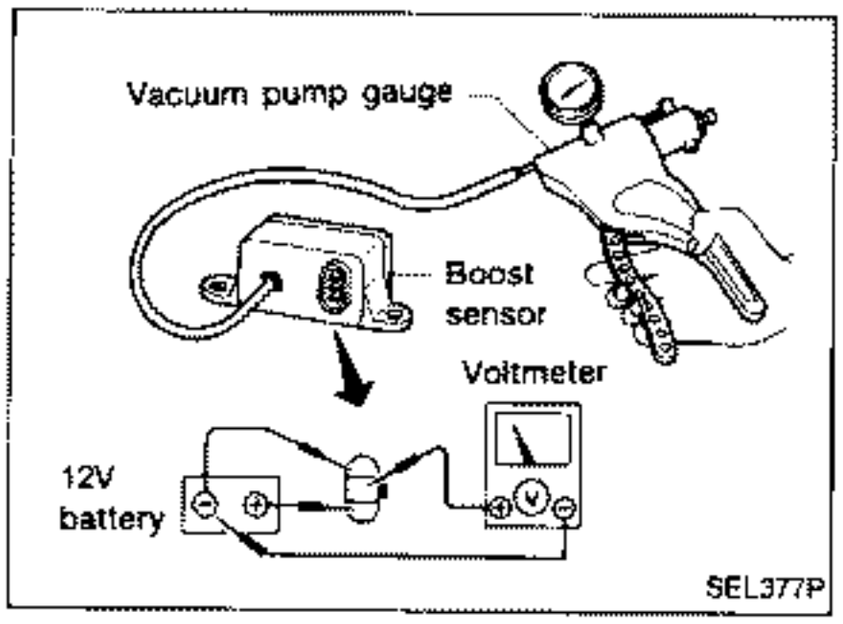

Boost Sensor Check

1. Connect vacuum pump gauge to boost sensor vacuum hose.
2. Disconnect harness connector from boost sensor and connect battery and voltmeter as shown.
3. Apply vacuum pressure to boost sensor by vacuum pump gauge and measure voltages.

Voltage:

Approx. 2.2V at 0 kPa (0 mbar, 0 mmHg, 0 inHg) (Atmospheric pressure)
Approx. 1.3V at –53.3 kPa (–533 mbar, –400 mmHg,–15.75 inHg)

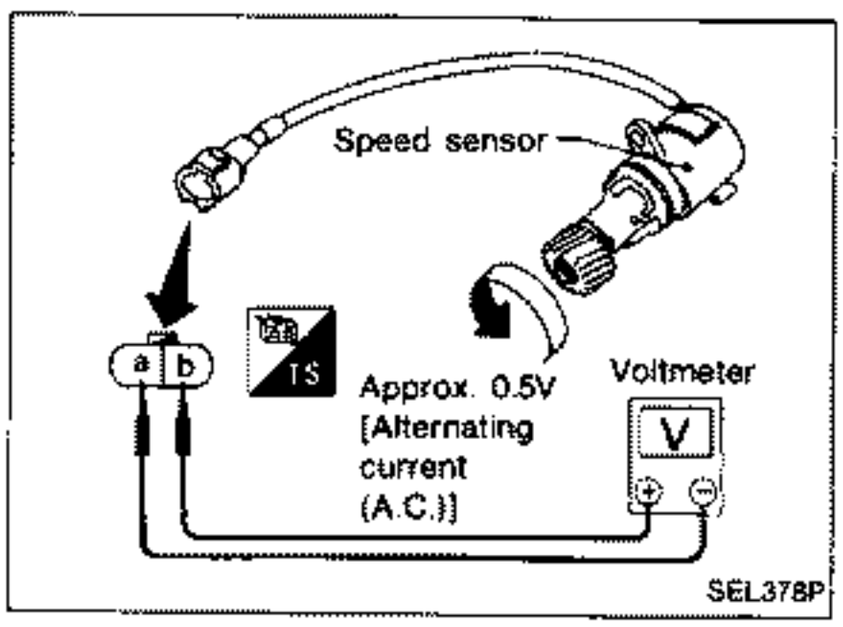

Speed Sensor Signal Check

1. Remove speed sensor from transmission.
2. Turn speedometer pinion quickly and measure voltage across ⓐ and ⓑ.

Warning Lamps/Schematic

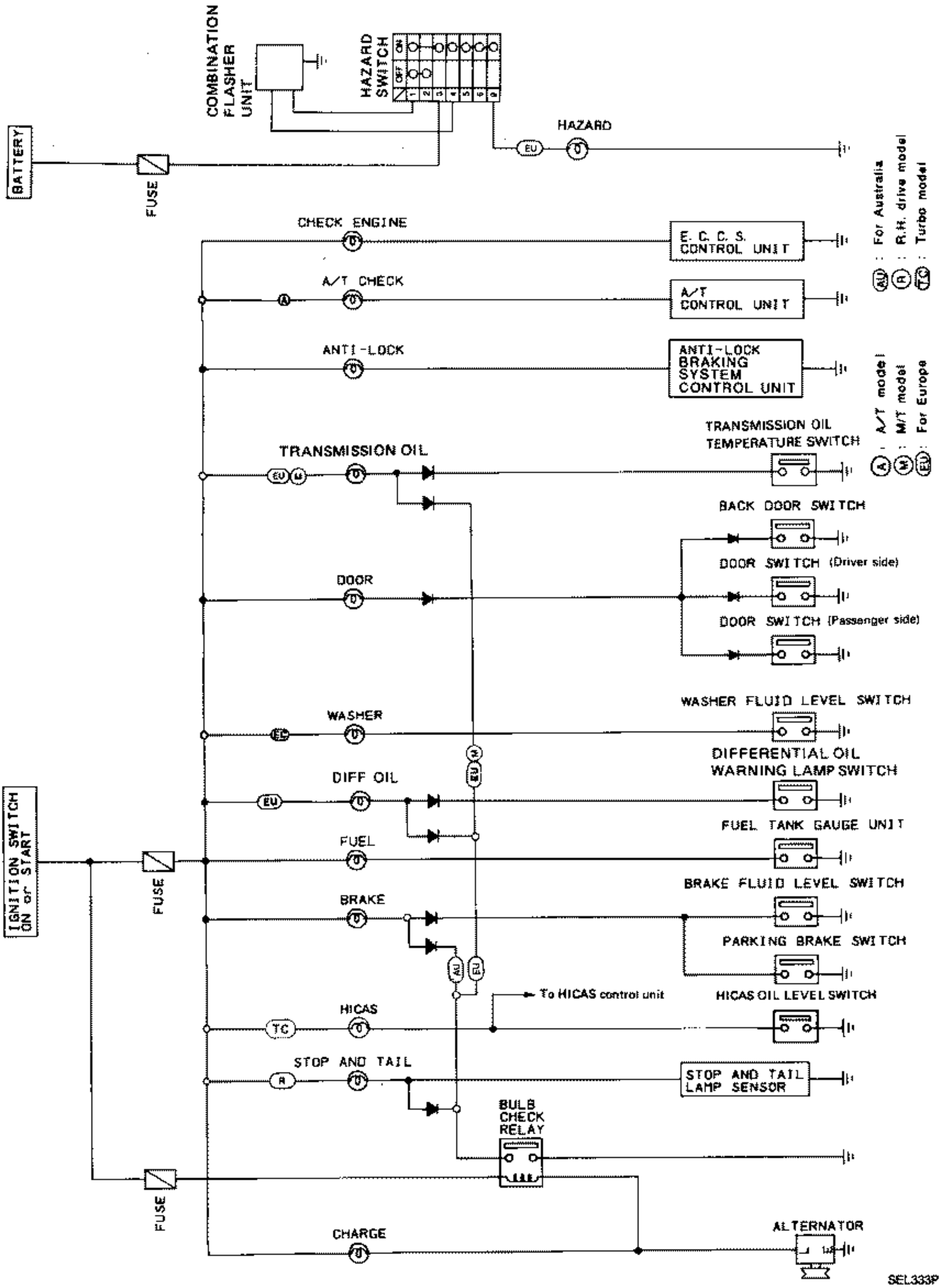

Warning Lamps/Wiring Diagram

L.H. DRIVE MODELS

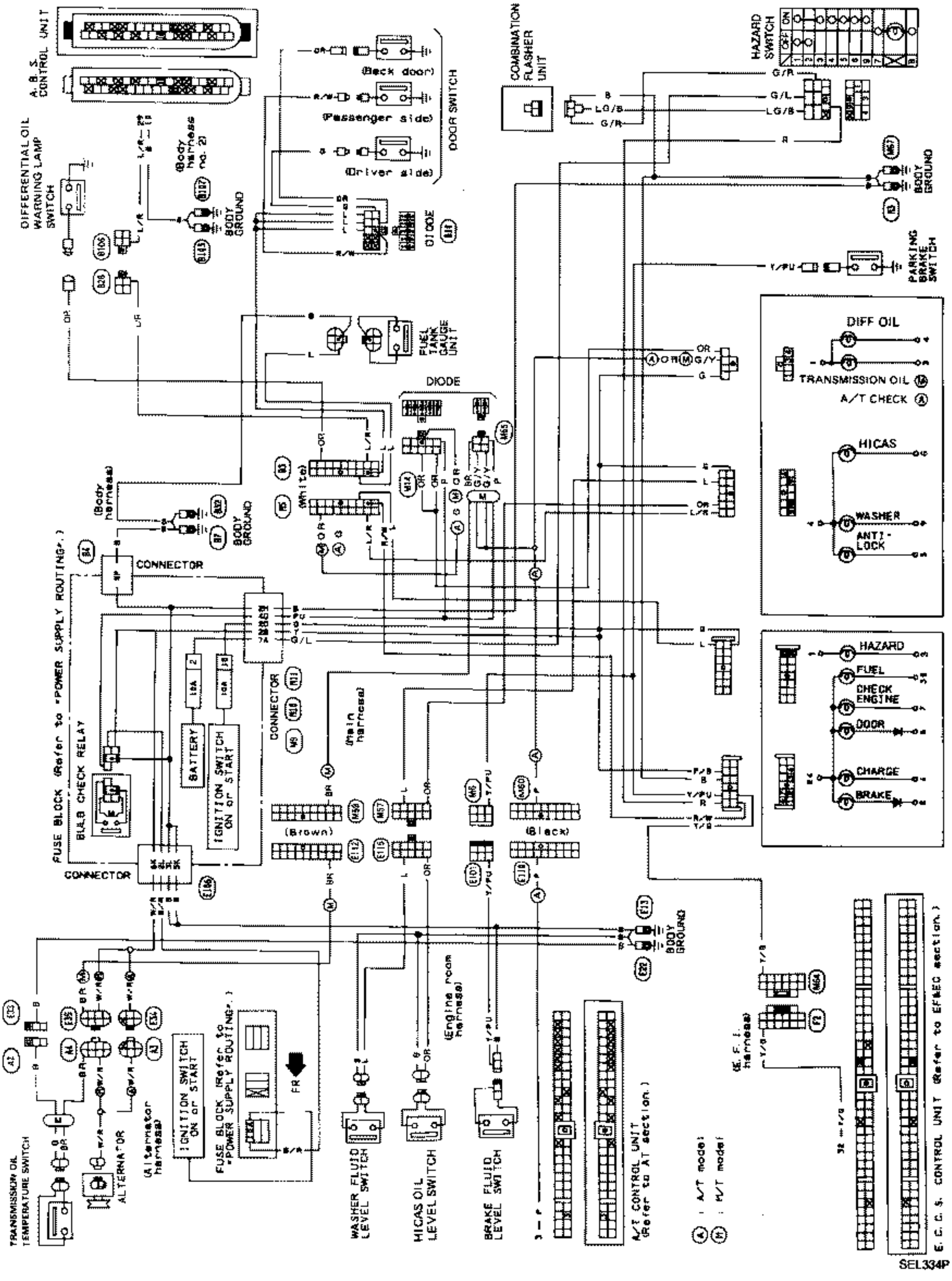

Warning Lamps/Wiring Diagram (Cont'd)

R.H. DRIVE MODELS

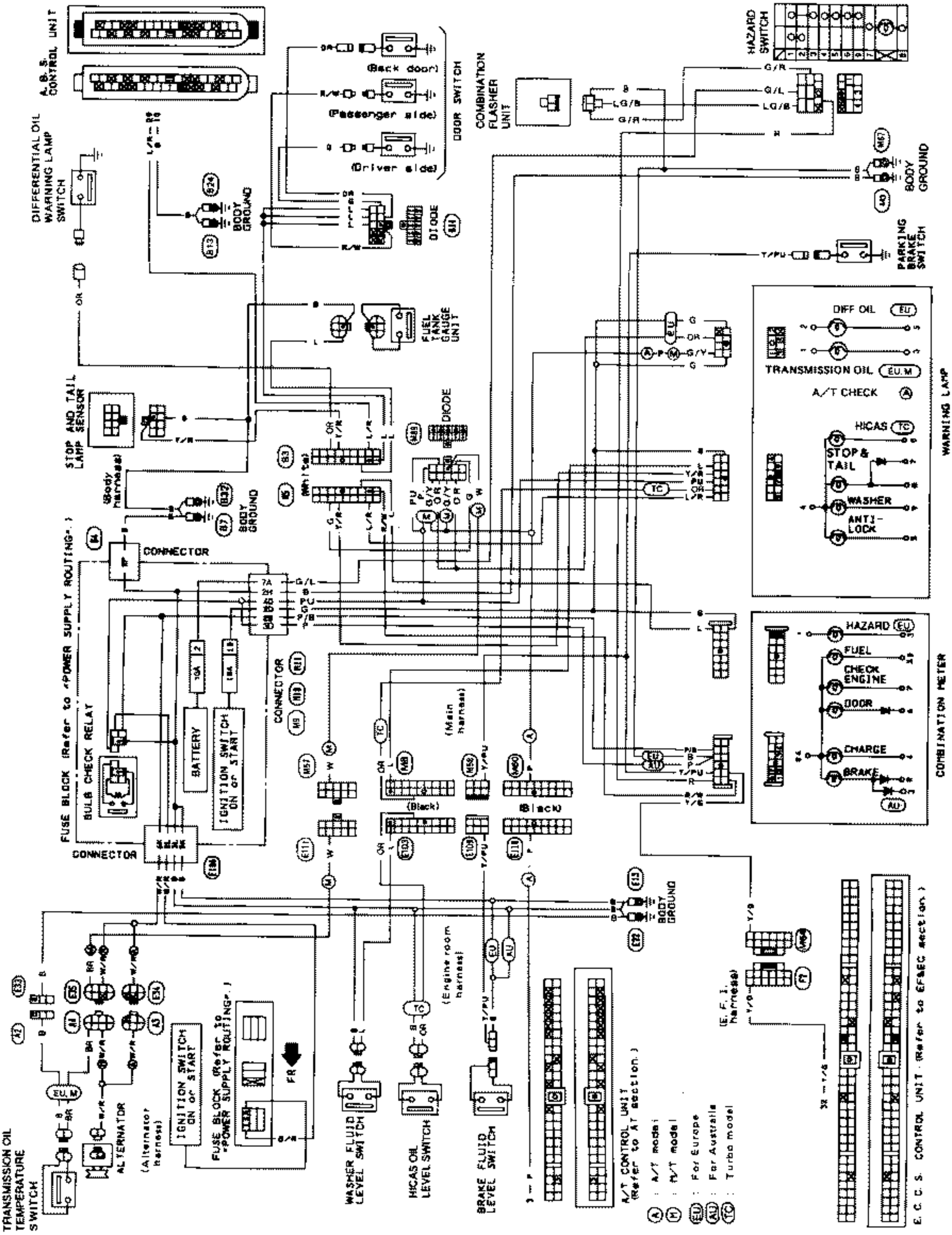

SEL335P

Warning Chime/Wiring Diagram

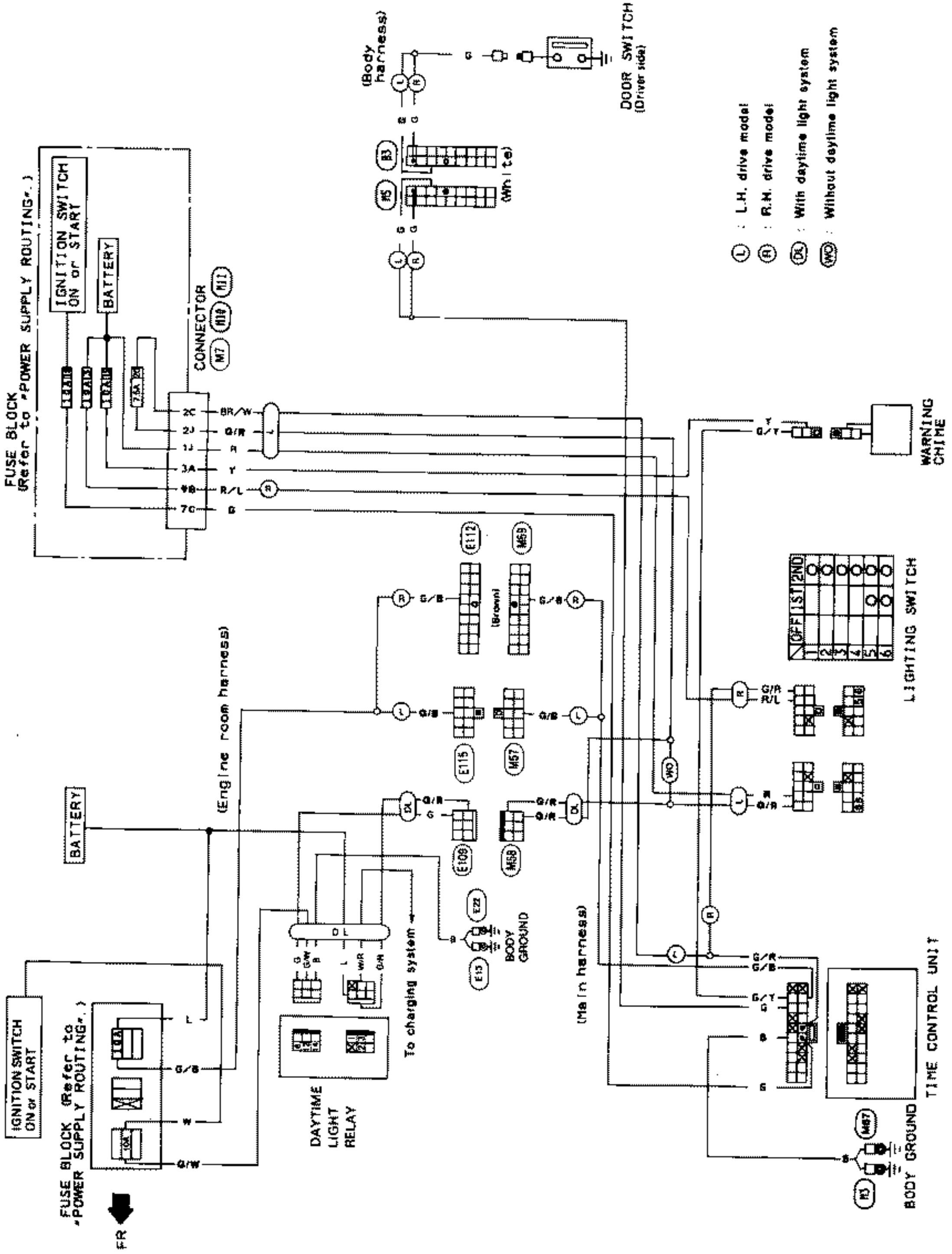

SEL336P

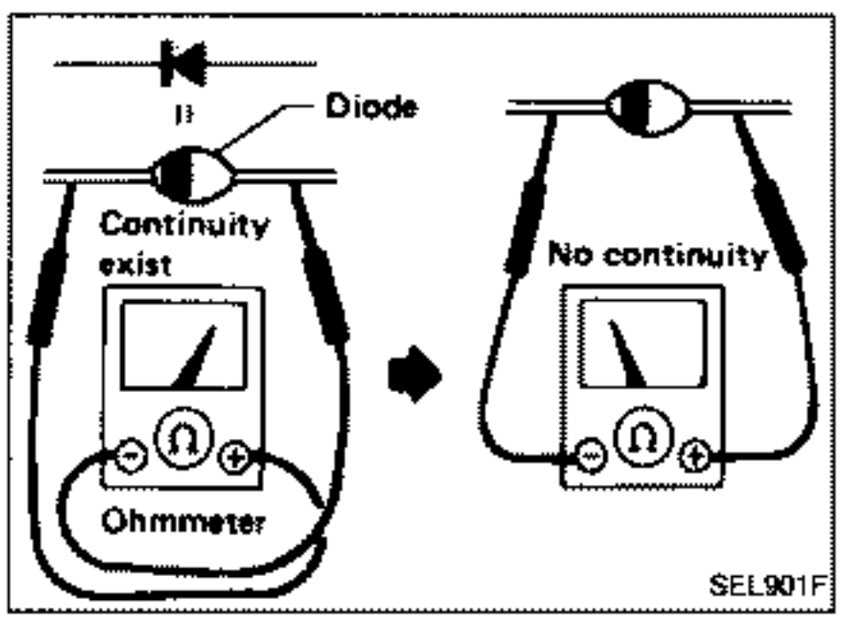

Diode Check

- Check continuity using an ohmmeter.
- Diode is functioning properly if test results are as shown in the figure at left.

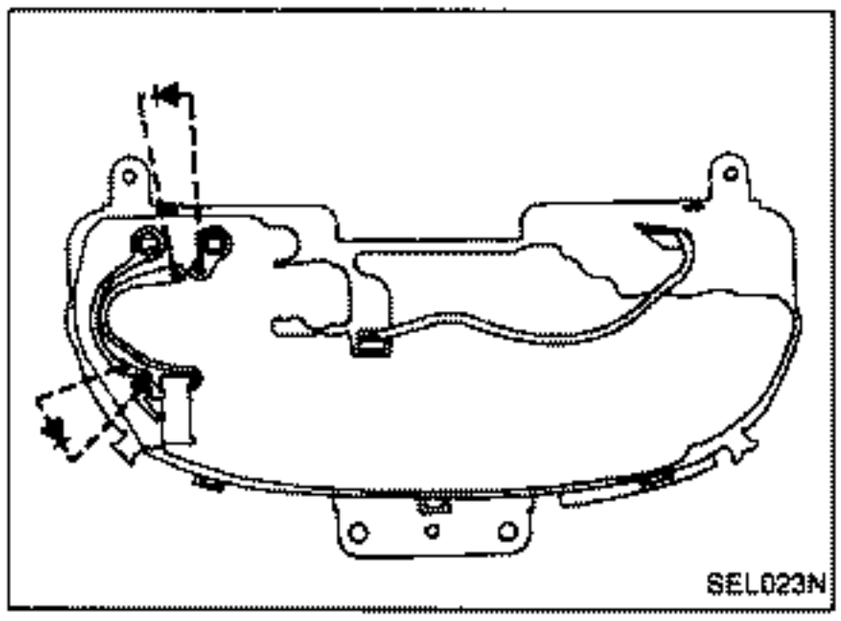

- Diodes for warning lamps are built into the combination meter printed circuit.

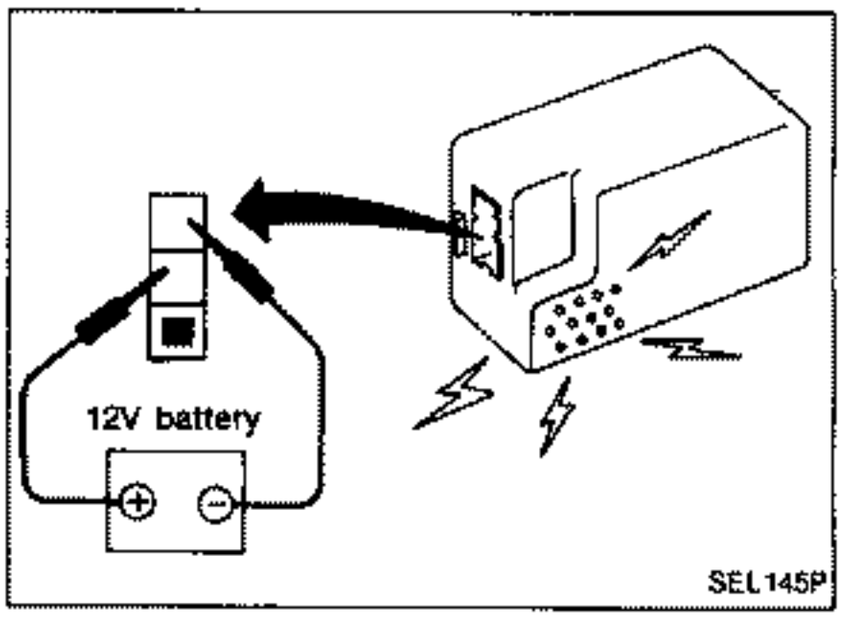

Warning Chime Check

Schematic

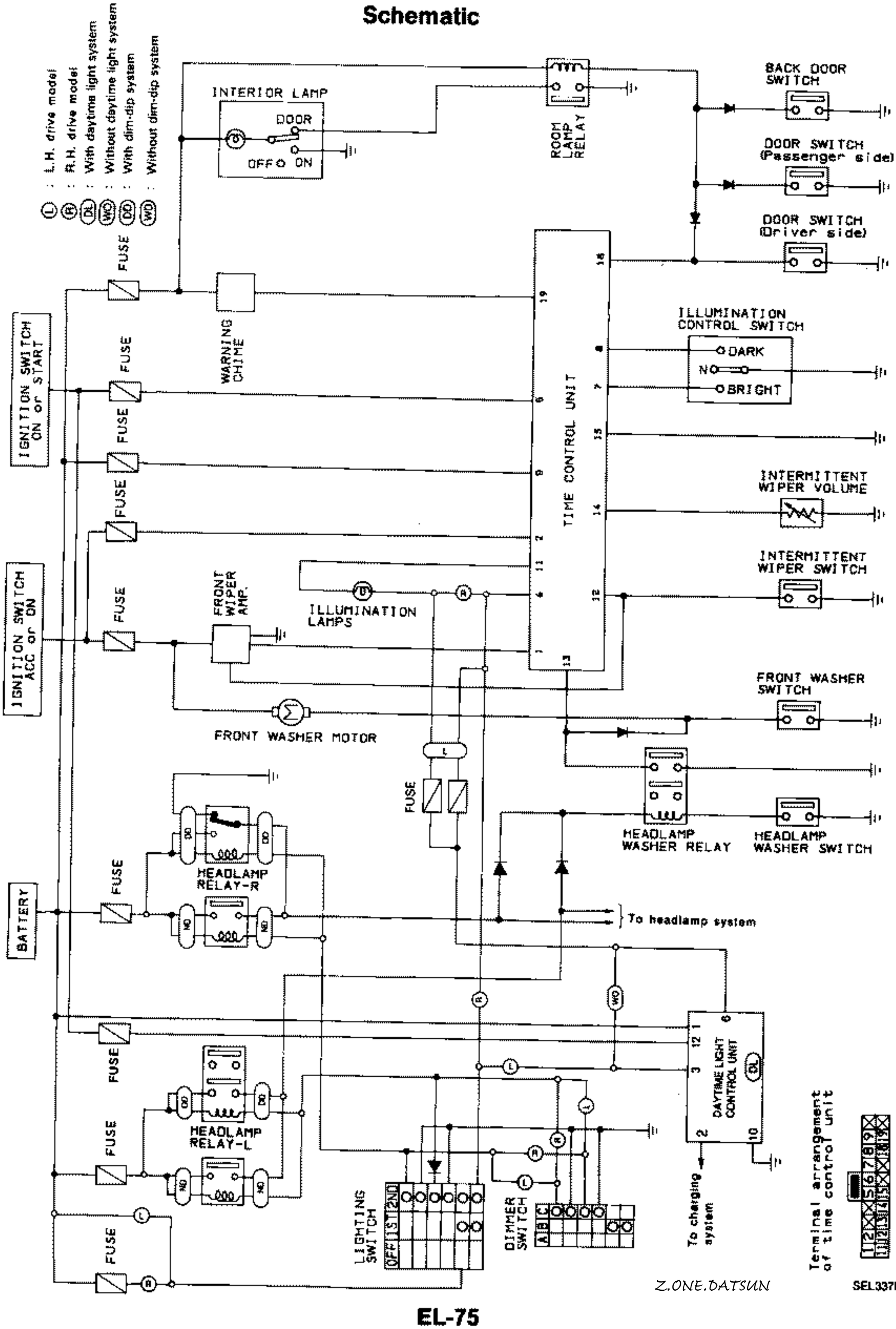

Z.ONE.DATSUN

Wiring Diagram

L.H. DRIVE MODELS

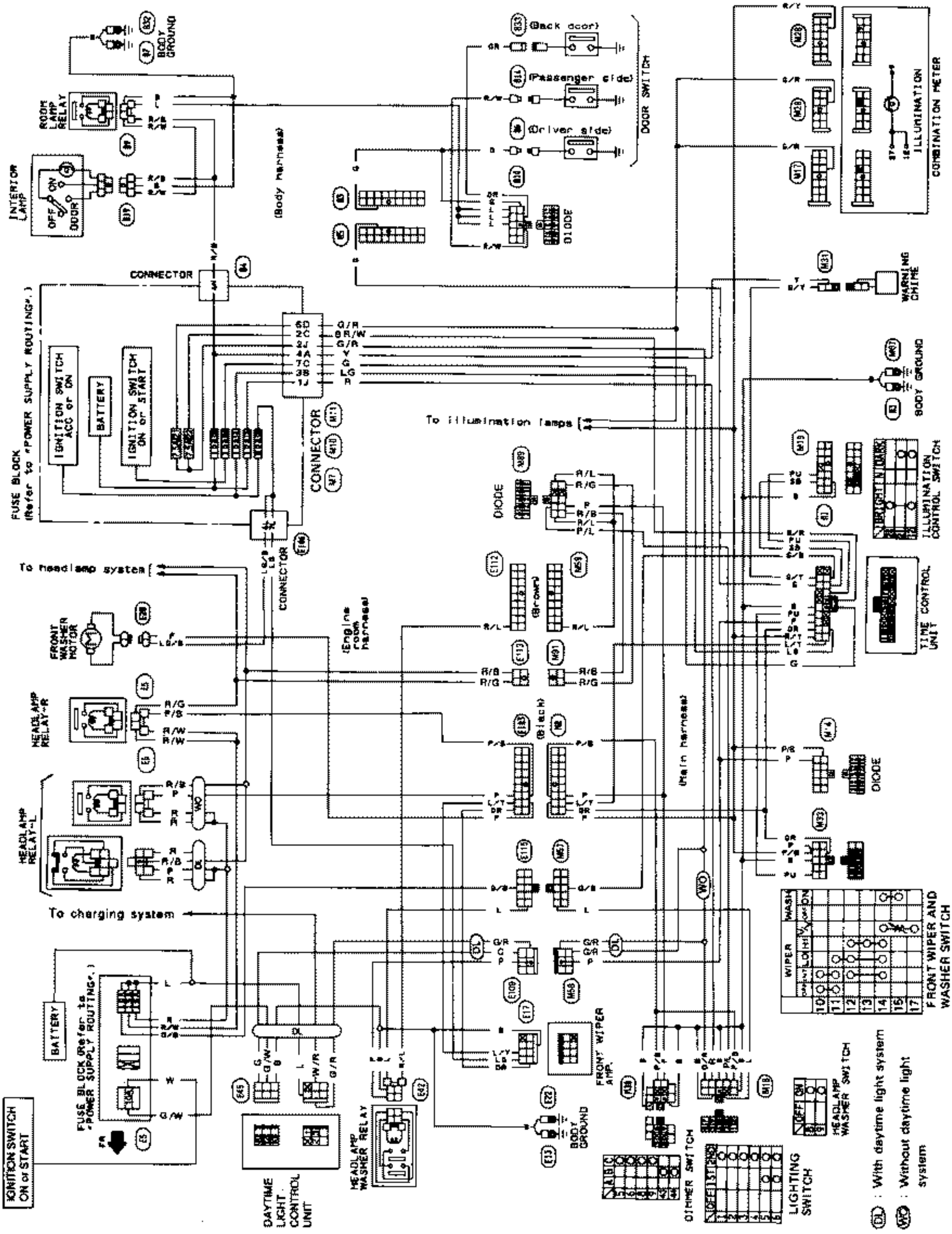

SEL338P

Wiring Diagram (Cont'd)

R.H. DRIVE MODELS

SEL339P

Z.ONE.DATSUN

Description

FUNCTION

- Time control unit has the following functions.

	Item	Details of control
1	Intermittent wiper control	Regulates intermittent time from approximately 3 to 23 seconds depending on the intermittent wiper volume setting.
2	Washer and wiper combination control Headlamp washer control	Wiper is operated in conjunction with washer switch. Headlamp washer is operated for about 7 seconds when headlamp washer switch is turned "ON".
3	Illumination control	Regulates brightness of illumination in 16 stages depending on the illumination control switch setting.
4	Light warning chime timer	When driver's door is opened with light switch "ON" and ignition switch"OFF", warning chime sounds.

OPERATING CONDITIONS

Input signal / Input terminal / Output terminal / Item		Power source from battery	Ignition switch	Light switch	Wiper switch "INT"	Washer switch	Driver's side door switch *1	Illumination control switch
		⑨	② or ⑤	⑥	⑫	⑬	⑱	⑦ or ⑧
Intermittent wiper control	①	ON	ACC or ON		ON			
Washer and wiper combination control Headlamp washer control	⑫	ON	ACC or ON			ON		
Illumination control	⑪	ON		ON				ON
Light warning chime timer	⑲	ON	OFF or ACC	ON			ON	

*1: Door switch is turned "ON" when door is opened.

Trouble-diagnosis

Symptom		DIAGNOSTIC PROCEDURE
Wiper & washer	Intermittent wiper does not operate.	1
	Intermittent time of wiper cannot be adjusted.	2
	Wiper and washer activate individually but not in combination.	3
Illumination	Illumination control system does not actuate.	4
Warning	Light warning chime does not activate.	5

Trouble-diagnosis (Cont'd)

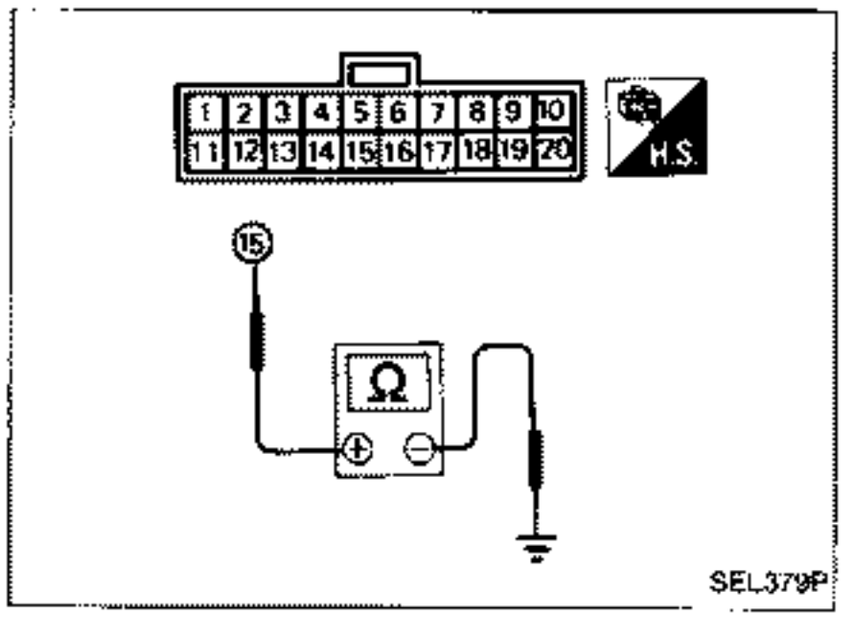

PREPARATION FOR TROUBLE-DIAGNOSIS

1. Remove lower trim.
2. Remove time control unit with harness connected.

POWER SUPPLY CIRCUIT CHECK

1. Connect ohmmeter from harness side.
2. Check continuity between terminal ⑮ and body ground.

Ohmmeter terminals		Continuity
(+)	(−)	
⑯	Body ground	Yes

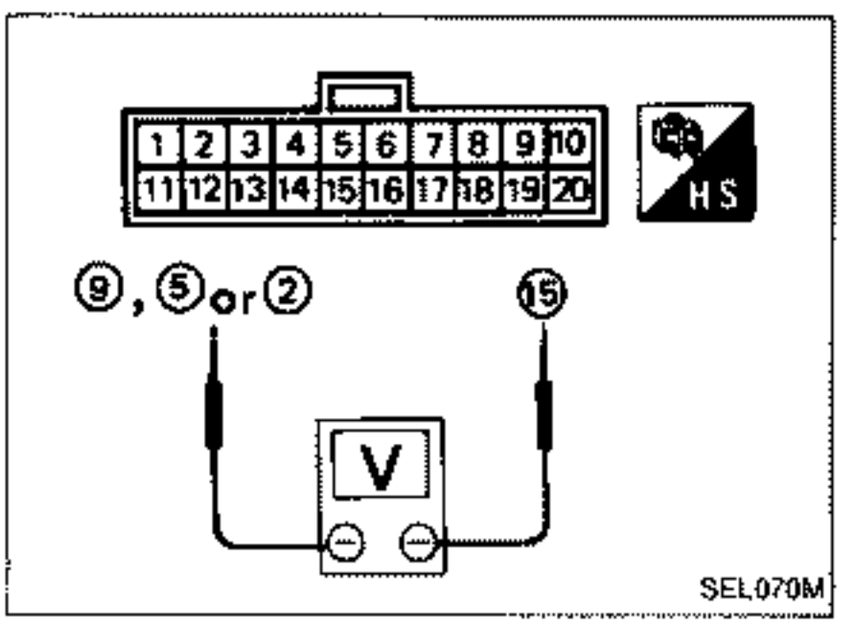

3. Connect voltmeter from harness side.
4. Measure voltage across terminal ⑮ and terminals ②, ⑤ or ⑨.

Voltmeter terminals		Ignition switch position		
(+)	(−)	OFF	ACC	ON
⑨	⑮	Approx. 12V	Approx. 12V	Approx. 12V
⑤	⑮	0V	0V	Approx. 12V
②	⑮	0V	Approx. 12V	Approx. 12V

Trouble-diagnosis (Cont'd)

DIAGNOSTIC PROCEDURE-1

Intermittent wiper does not operate.



A T.C.U. OUTPUT FOR WIPER RELAY CIRCUIT CHECK
Measure voltage across ① and ⑮.

Wiper switch → "INT"

Needle swings from 0 to 12V every 3 to 23 seconds.

SEL071M

B WIPER SWITCH CIRCUIT CHECK
Check continuity between ⑫ and ⑮.



Wiper switch
"INT": 0V
"OFF": 12V

SEL072M

Go to "Power Supply Circuit Check". → N.G. → Check harness for T.C.U. power supply circuit.

Go to "Power Supply Circuit Check". — O.K. ↓

A Check T.C.U. output for wiper amplifier circuit. → O.K. → Check wiper amplifier. Refer to "WIPER AND WASHER".

Check wiper amplifier. Refer to "WIPER AND WASHER". — O.K. ↓ — N.G. → Replace wiper amplifier.

Check wiper amplifier. Refer to "WIPER AND WASHER". — O.K. ↓ — N.G. → Check harness between T.C.U. and wiper amplifier.

Check T.C.U. output for wiper amplifier circuit. — N.G. ↓

B Check wiper switch circuit check. — O.K. ↓ — N.G. → Replace T.C.U.

Check wiper switch circuit check. — N.G. ↓

Check wiper switch. — O.K. ↓ — N.G. → Replace wiper switch.

Check wiper switch. — O.K. ↓

Check harness between T.C.U. and wiper switch.

DIAGNOSTIC PROCEDURE-2

Intermittent time of wiper cannot be adjusted.

A INTERMITTENT WIPER VOLUME CIRCUIT CHECK
Measure resistance between ⑭ and ⑮ while turning intermittent wiper volume.

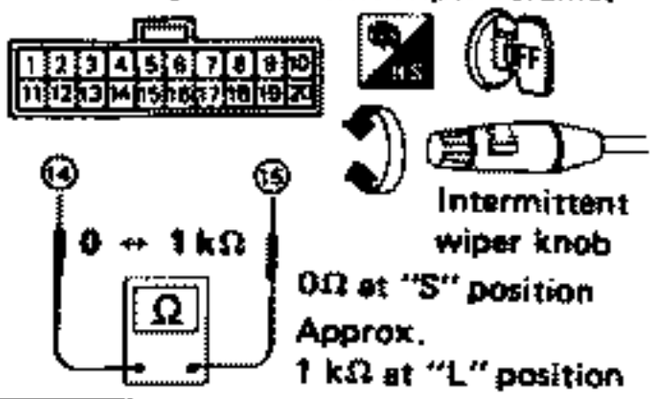

Check intermittent wiper volume circuit. → O.K. → Replace T.C.U.

Check intermittent wiper volume circuit. — N.G. ↓

Check intermittent wiper volume. → N.G. → Replace wiper switch.

Check intermittent wiper volume. — O.K. ↓

Check harness between T.C.U. and intermittent wiper volume.

Trouble-diagnosis (Cont'd)

DIAGNOSTIC PROCEDURE-3

Wiper and washer activate individually but not in combination.

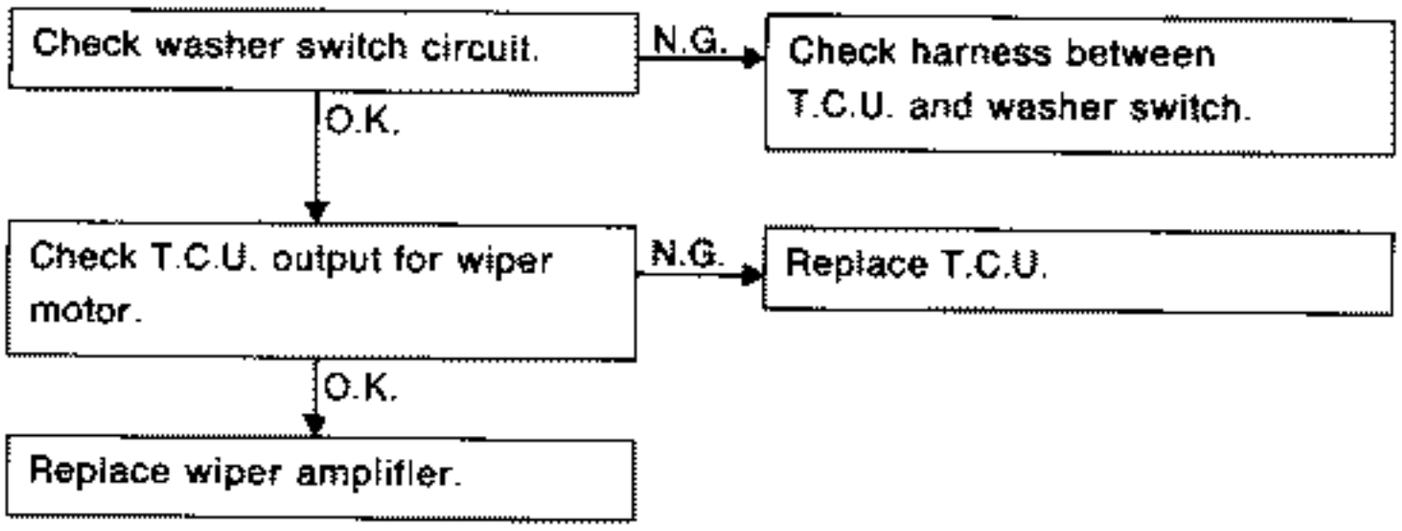

A T.C.U. OUTPUT FOR LIGHT SWITCH CIRCUIT CHECK

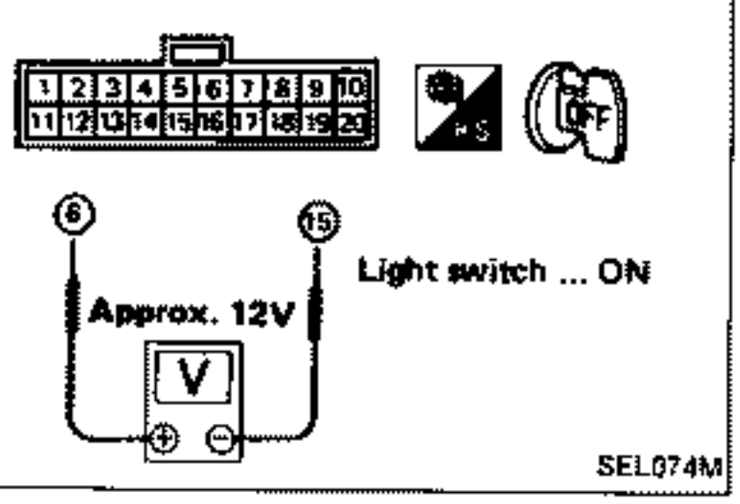

B ILLUMINATION CIRCUIT CHECK

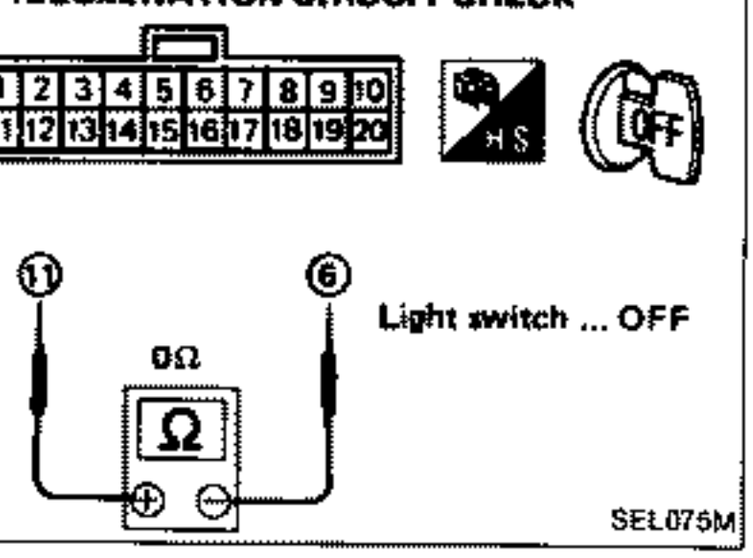

C ILLUMINATION CONTROL CIRCUIT CHECK

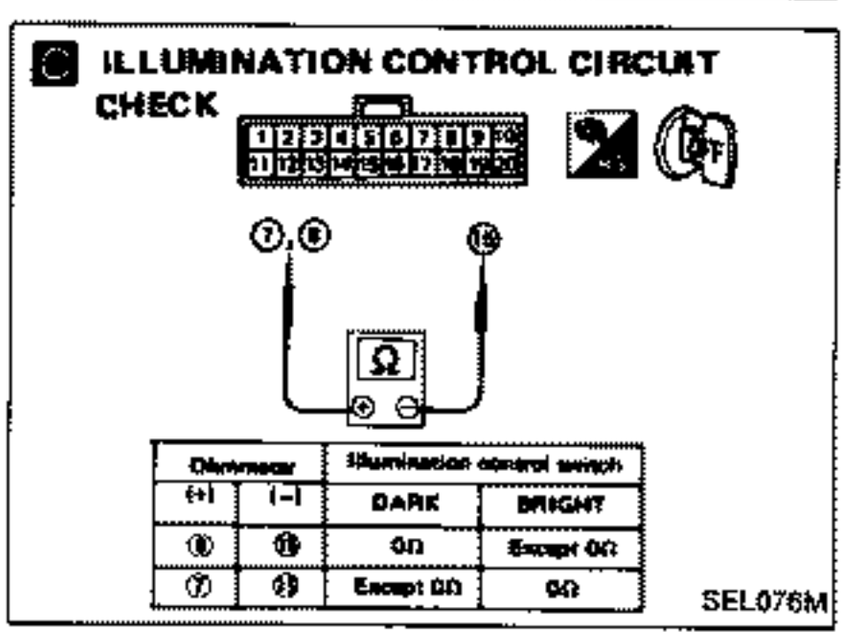

Dimmer		Illumination control switch	
(+)	(−)	DARK	BRIGHT
8	19	0Ω	Except 0Ω
7	19	Except 0Ω	0Ω

DIAGNOSTIC PROCEDURE-4

Illumination control system does not actuate.

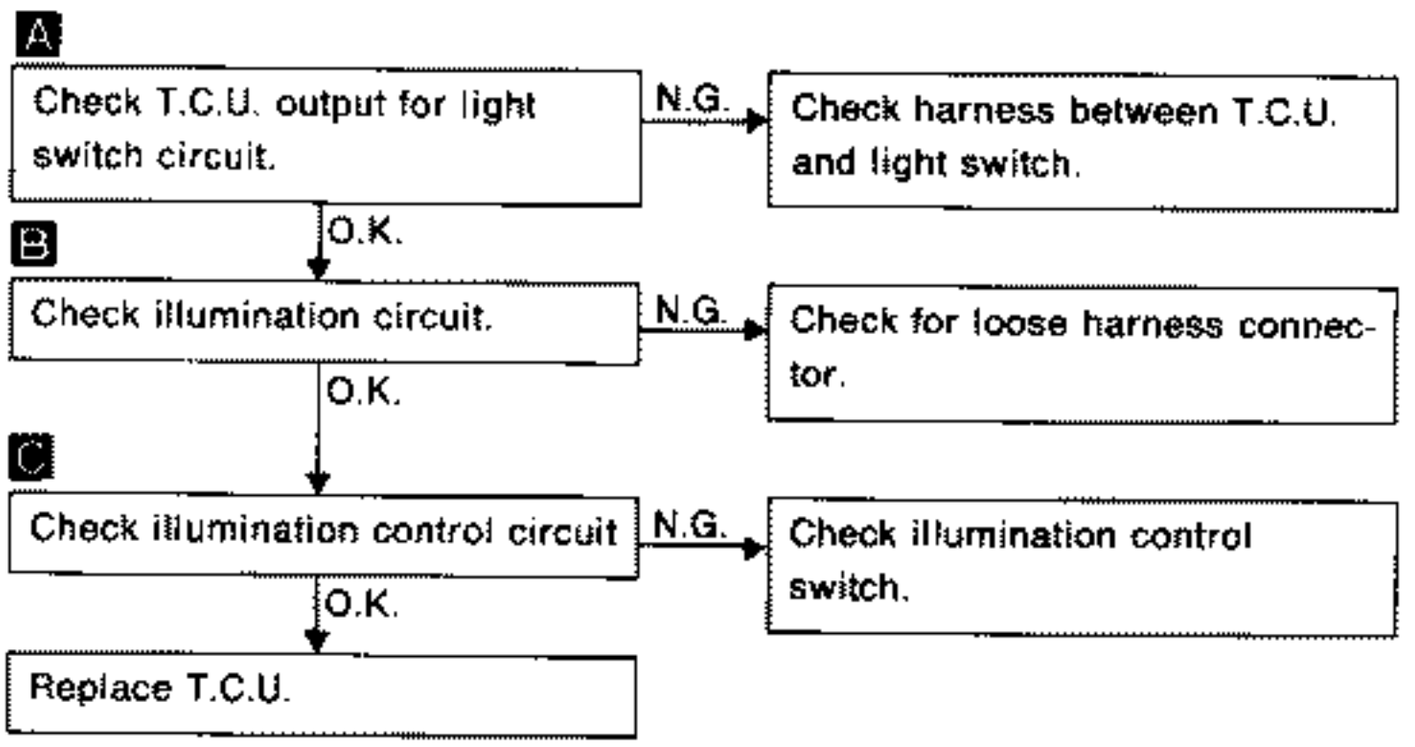

Trouble-diagnosis (Cont'd)

DIAGNOSTIC PROCEDURE-5

Light warning chime does not activate.

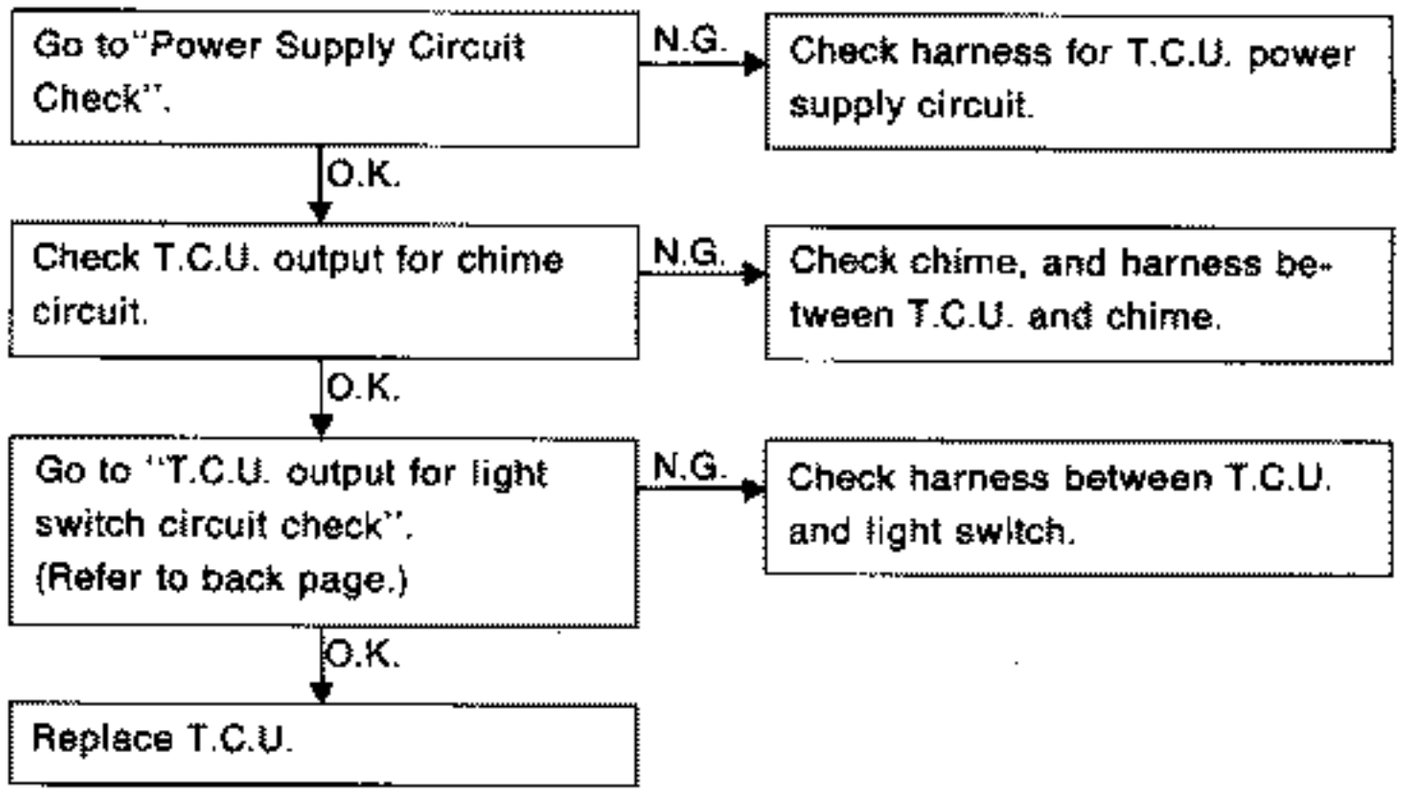

Front Wiper and Washer/Wiring Diagram

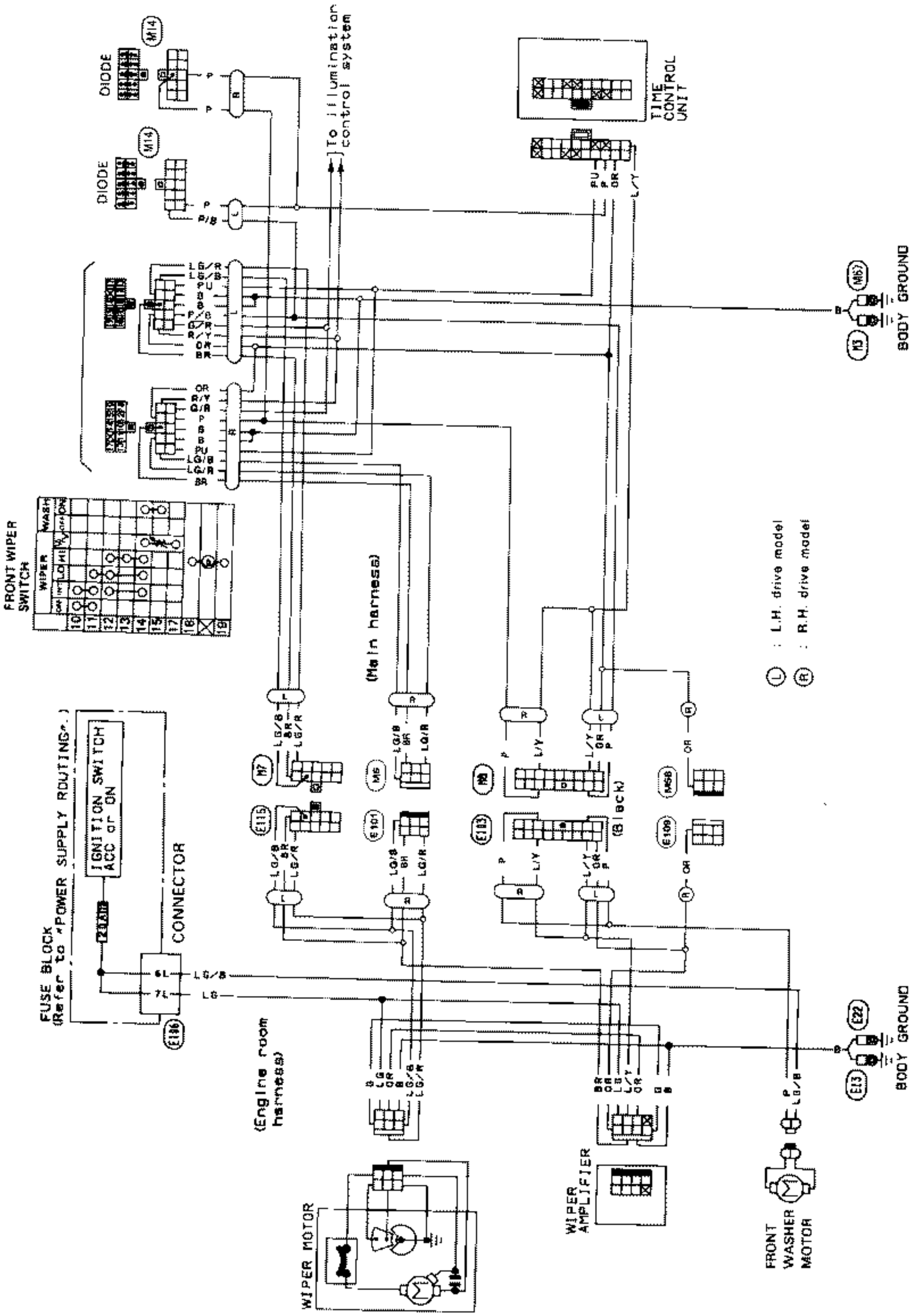

SEL340P

Rear Wiper and Washer/Wiring Diagram

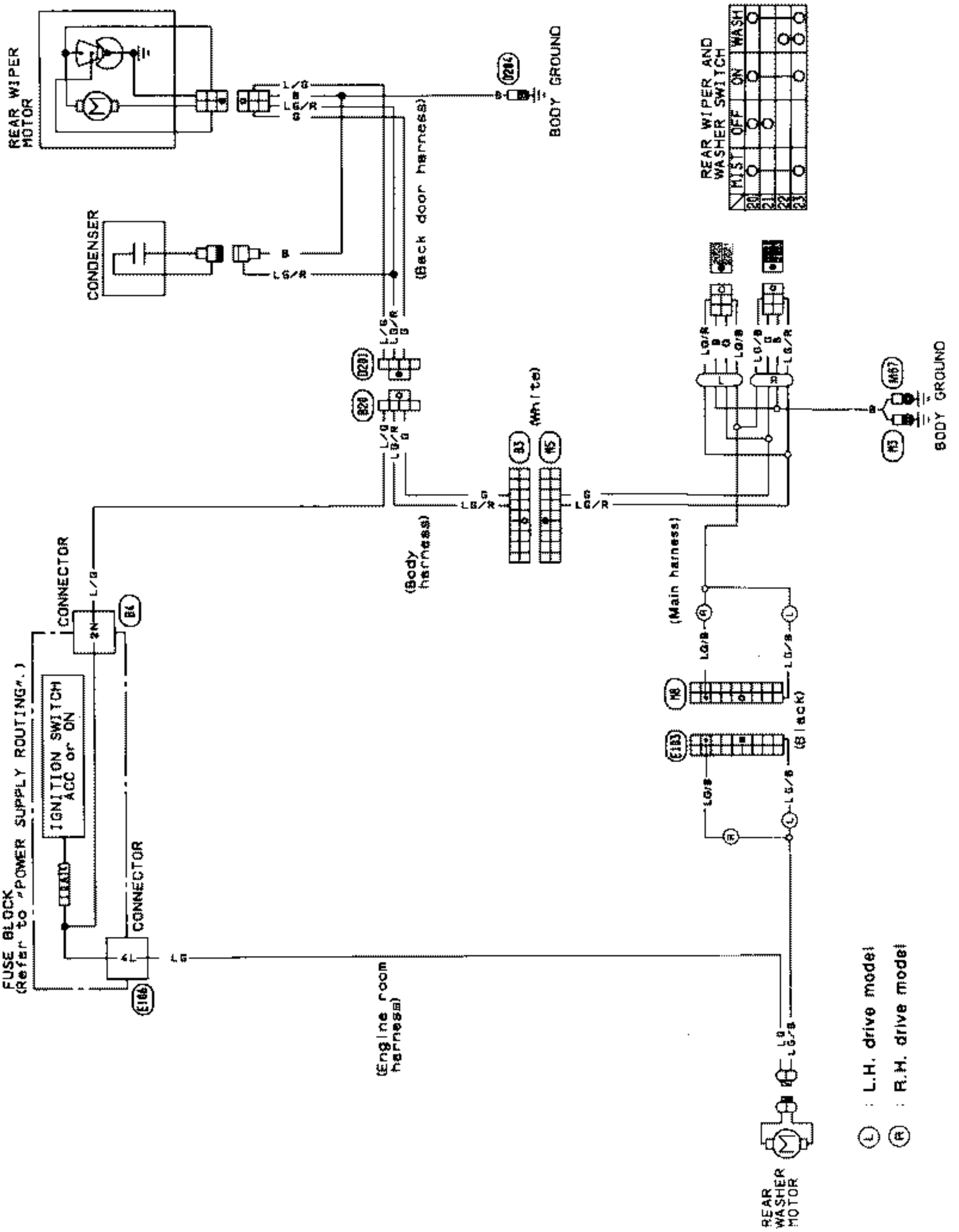

SEL341P

Headlamp Washer/Wiring Diagram

L.H. DRIVE MODELS

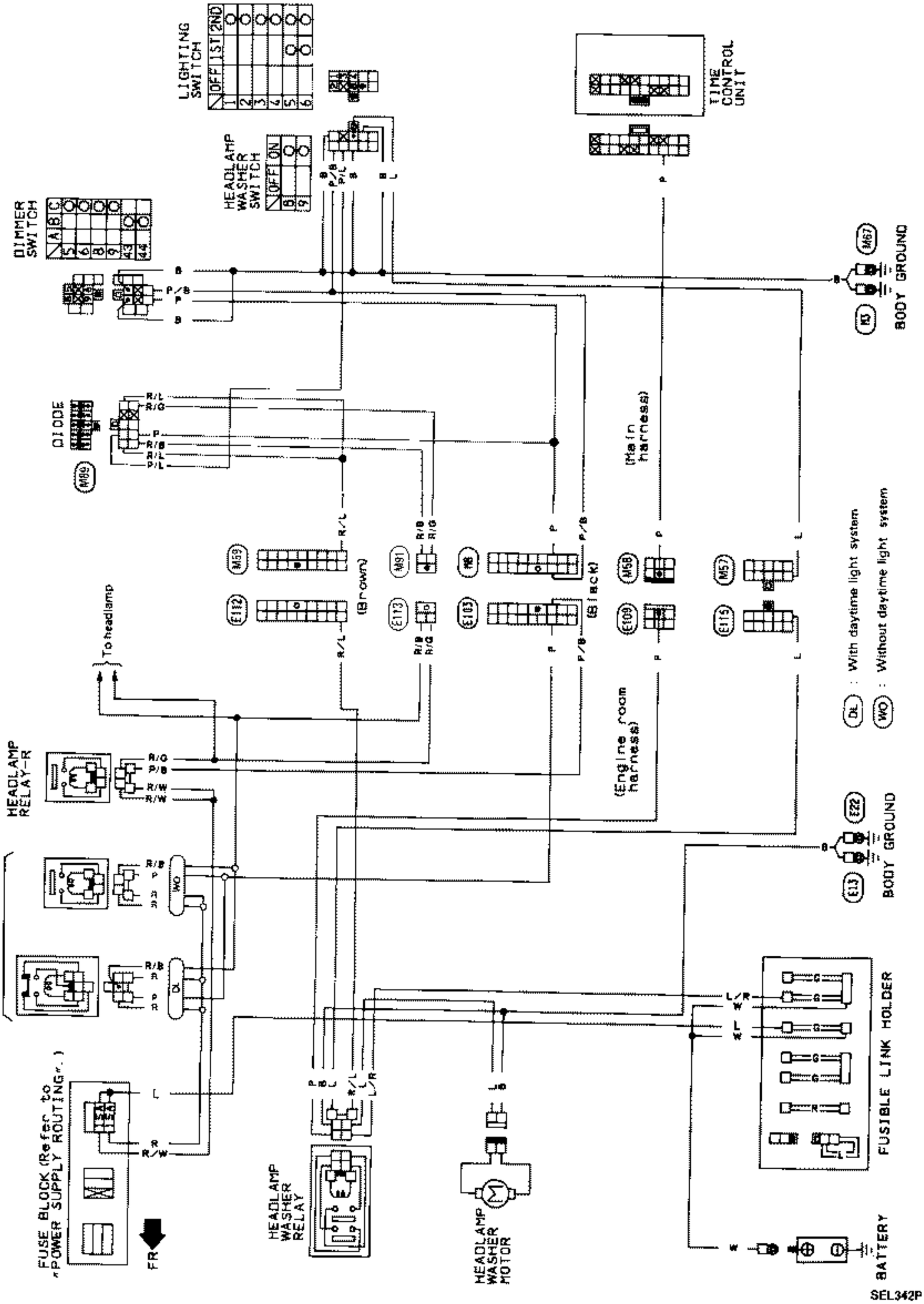

SEL342P

Headlamp Washer/Wiring Diagram (Cont'd)

R.H. DRIVE MODELS

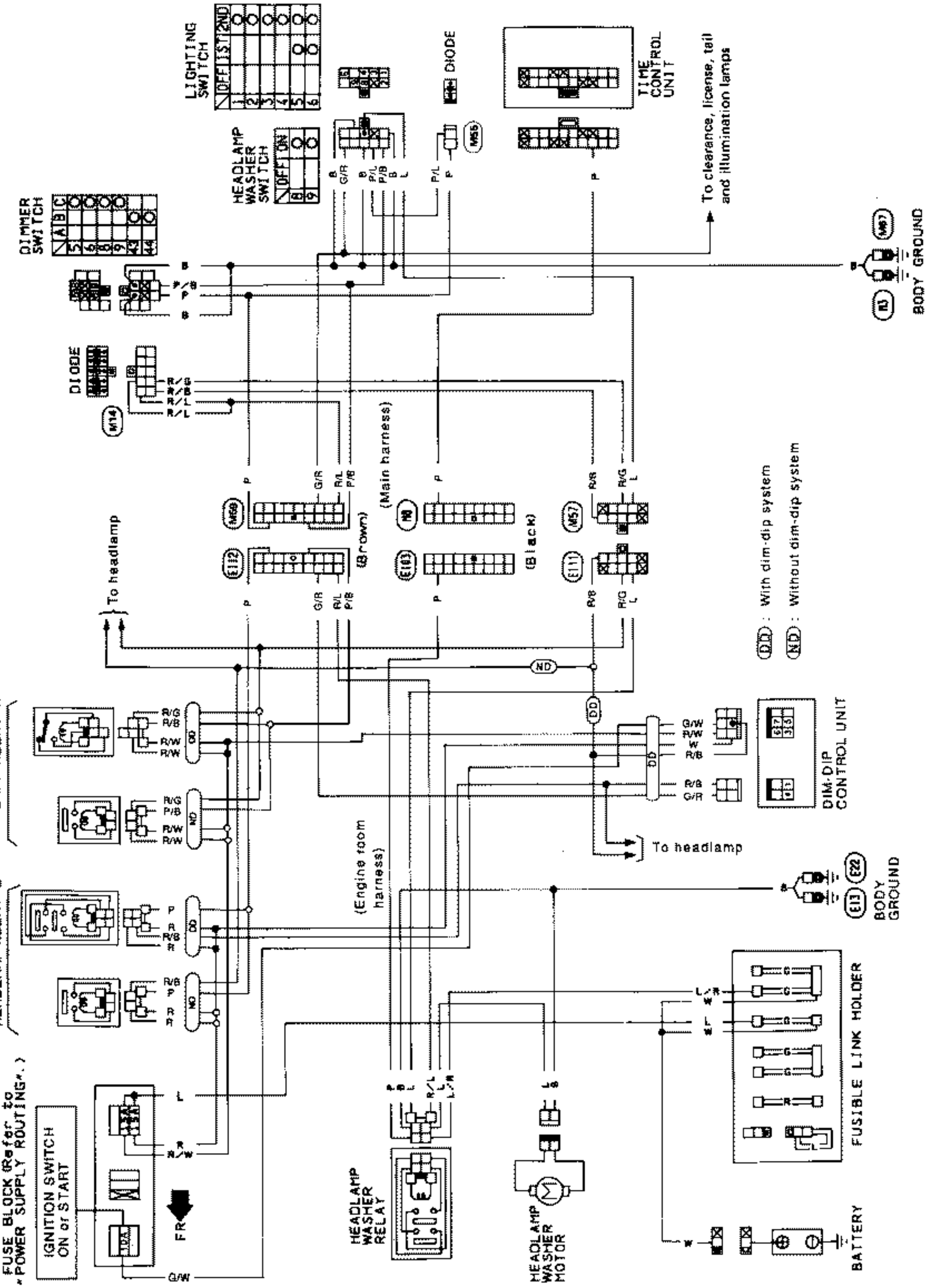

SEL343P

Installation

1. Prior to wiper arm installation, turn "ON" wiper switch to operate wiper motor and then turn it "OFF" (Auto Stop).
2. Lift the blade up and then set it down onto glass surface to set the blade center to clearance "C" or "D" immediately before tightening nut.
3. Eject washer fluid. Turn "ON" wiper switch to operate wiper motor and then turn it "OFF".
4. Ensure that wiper blades stop within clearance "C" or "D". Clearance "C": 0 - 10 mm (0 - 0.39 in) Clearance "D": 73 - 88 mm (2.87 - 3.46 in)

- Tighten windshield wiper arm nuts to specified torque.

Front wiper:
: 26 - 32 N·m (2.7 - 3.3 kg-m, 20 - 24 ft-lb)
Rear wiper:
: 13 - 18 N·m (1.3 - 1.8 kg-m, 9 - 13 ft-lb)

Front wiper and washer

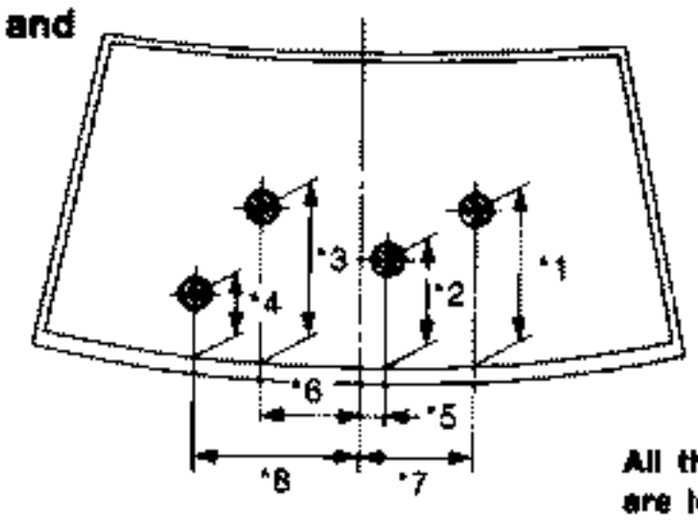

*1:	364 (14.33)
*2:	200 (7.87)
*3:	411 (16.18)
*4:	255 (10.04)
*5:	173 (6.81)
*6:	198 (7.80)
*7:	370 (14.57)
*8:	416 (16.38)

All the diameters of these circles are less than 80 (3.15).

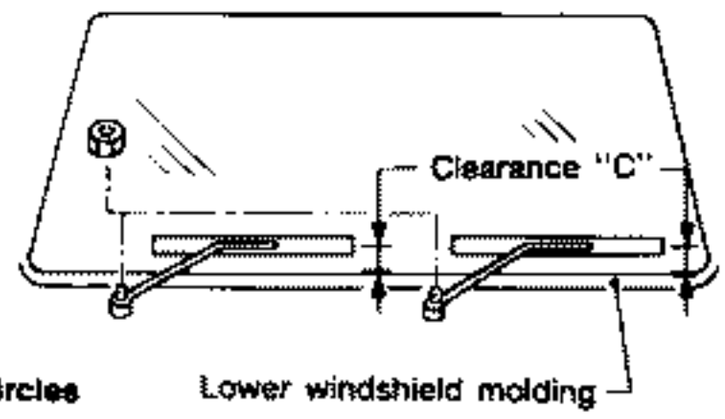

Unit: mm (in)

SEL107P

Rear wiper and washer

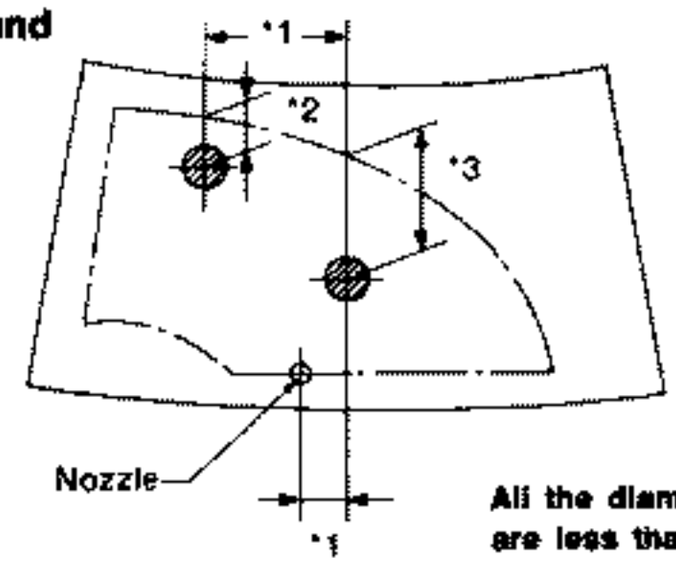

*1:	170 (6.69)
*2:	50 (1.97)
*3:	220 (8.66)

All the diameters of these circles are less than 80 (3.15).

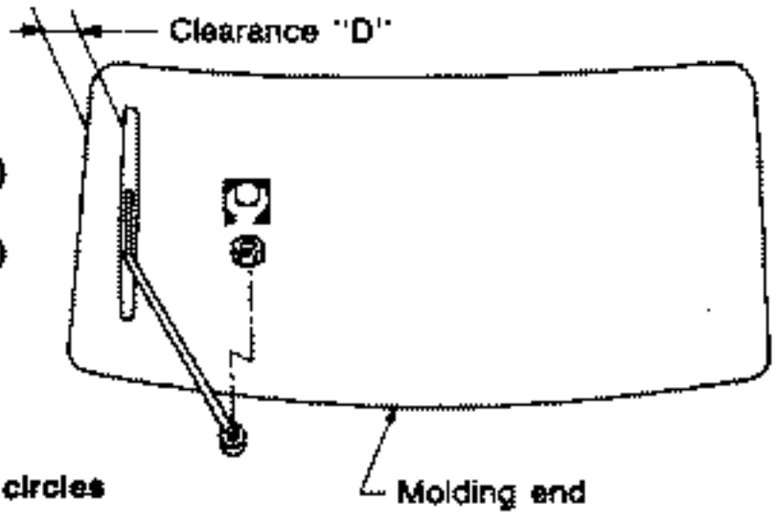

Unit: mm (in)

SEL026N

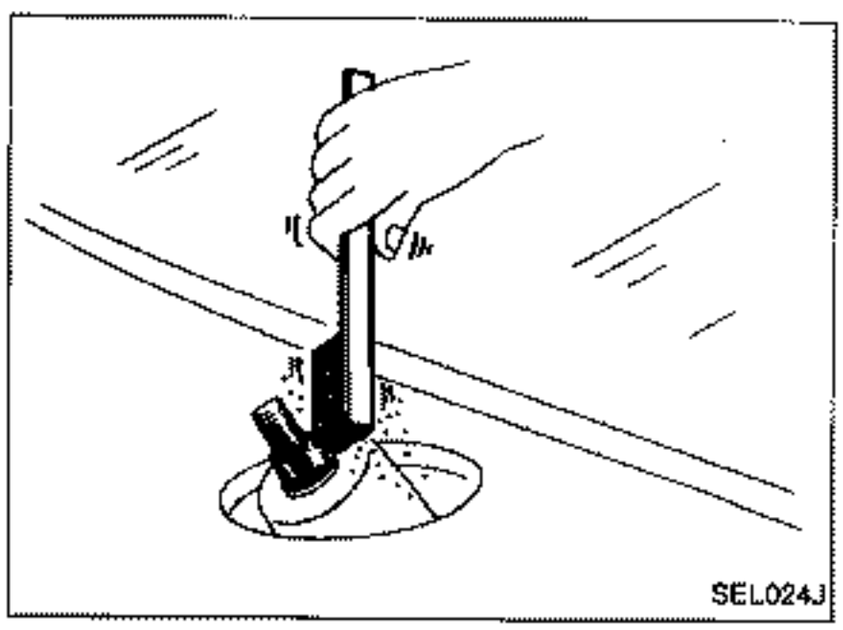

- **Before reinstalling wiper arm, clean up the pivot area as illustrated. This will reduce possibility of wiper arm looseness.**

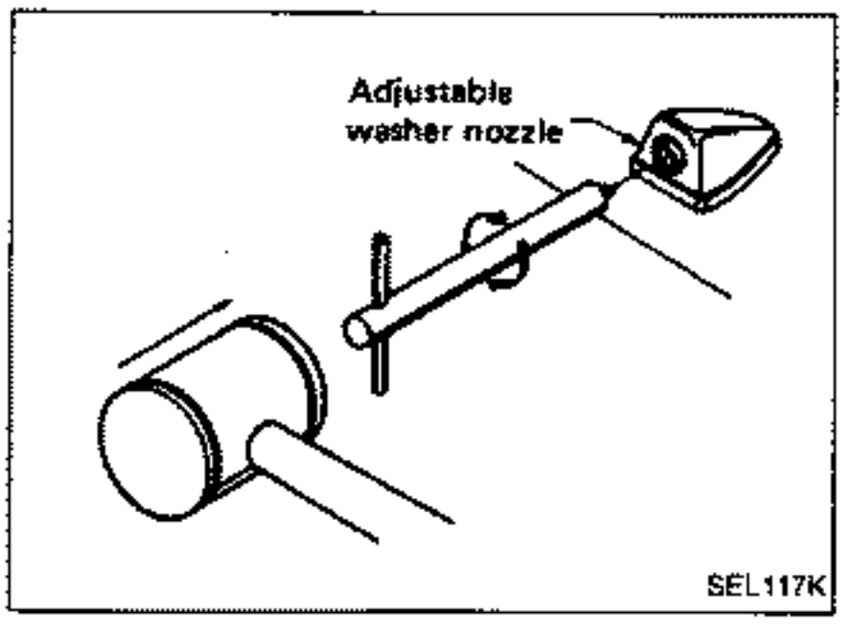

Washer Nozzle Adjustment

- Adjust washer nozzle with a suitable tool as shown in the figure at left.

Before attempting to turn the nozzle, gently tap the end of the tool to free the nozzle. This will prevent "rounding out" the small female square in the center of the nozzle.

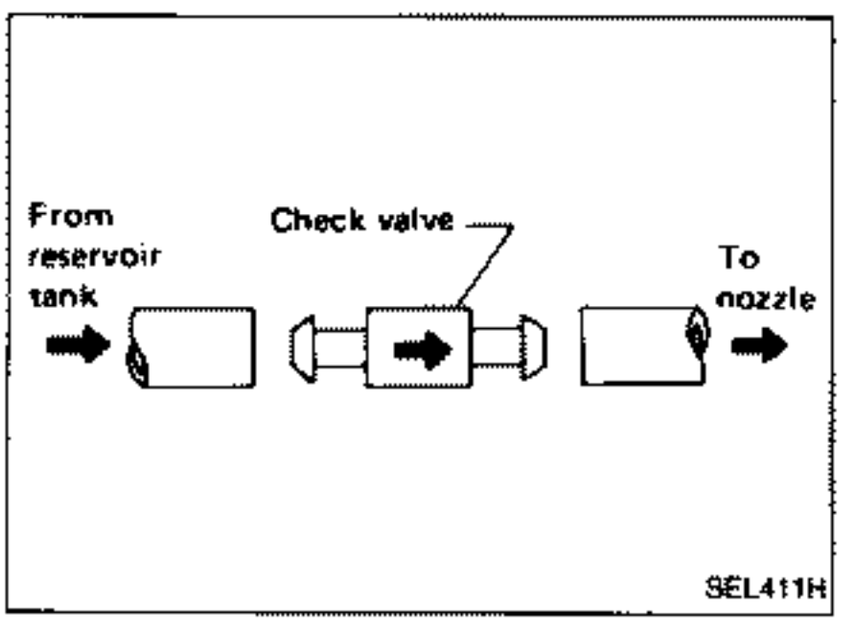

Check Valve

- A check valve is provided in the washer fluid line. Be careful not to connect check valve to washer tube in the wrong direction.

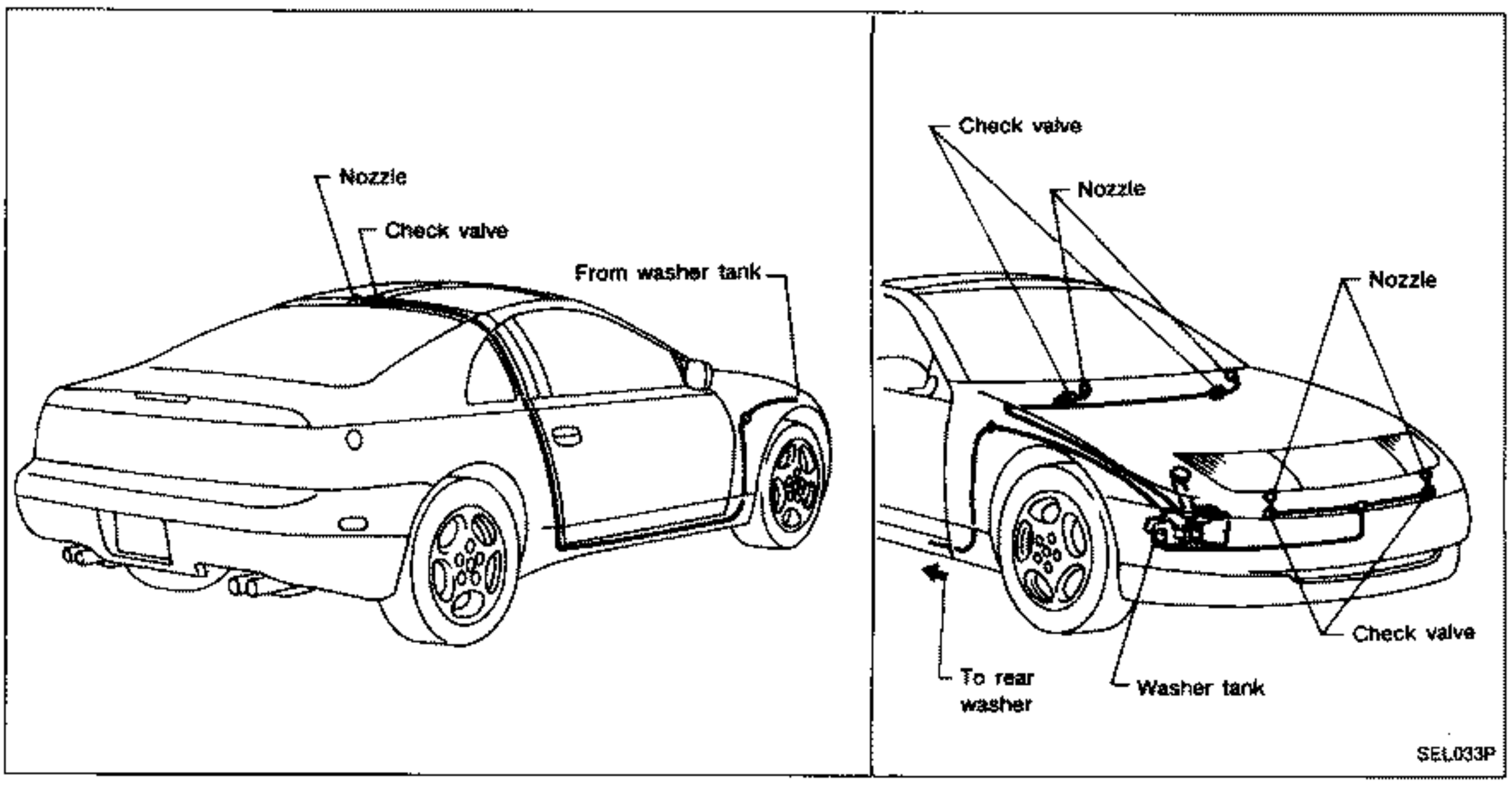

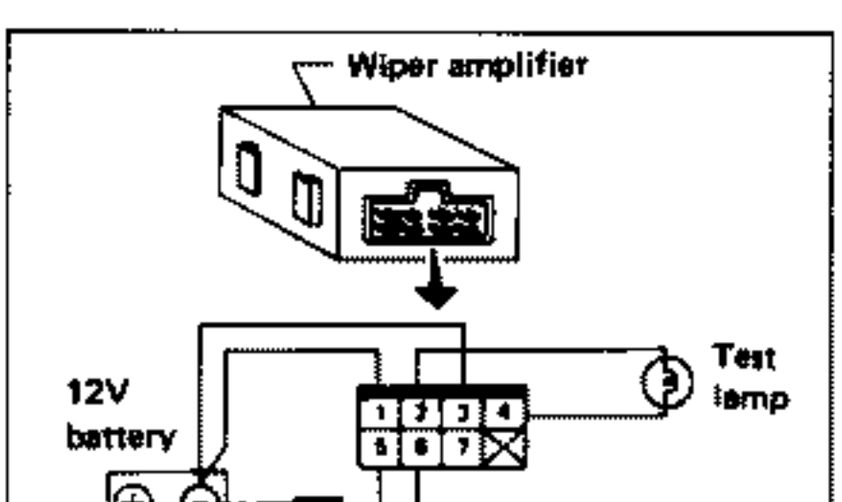

Wiper Amplifier Check

1. Connect as shown in the figure at left.
2. If test lamp comes on when connected to terminal ⑥ and battery ground, wiper relay is normal.

Wiring Diagram

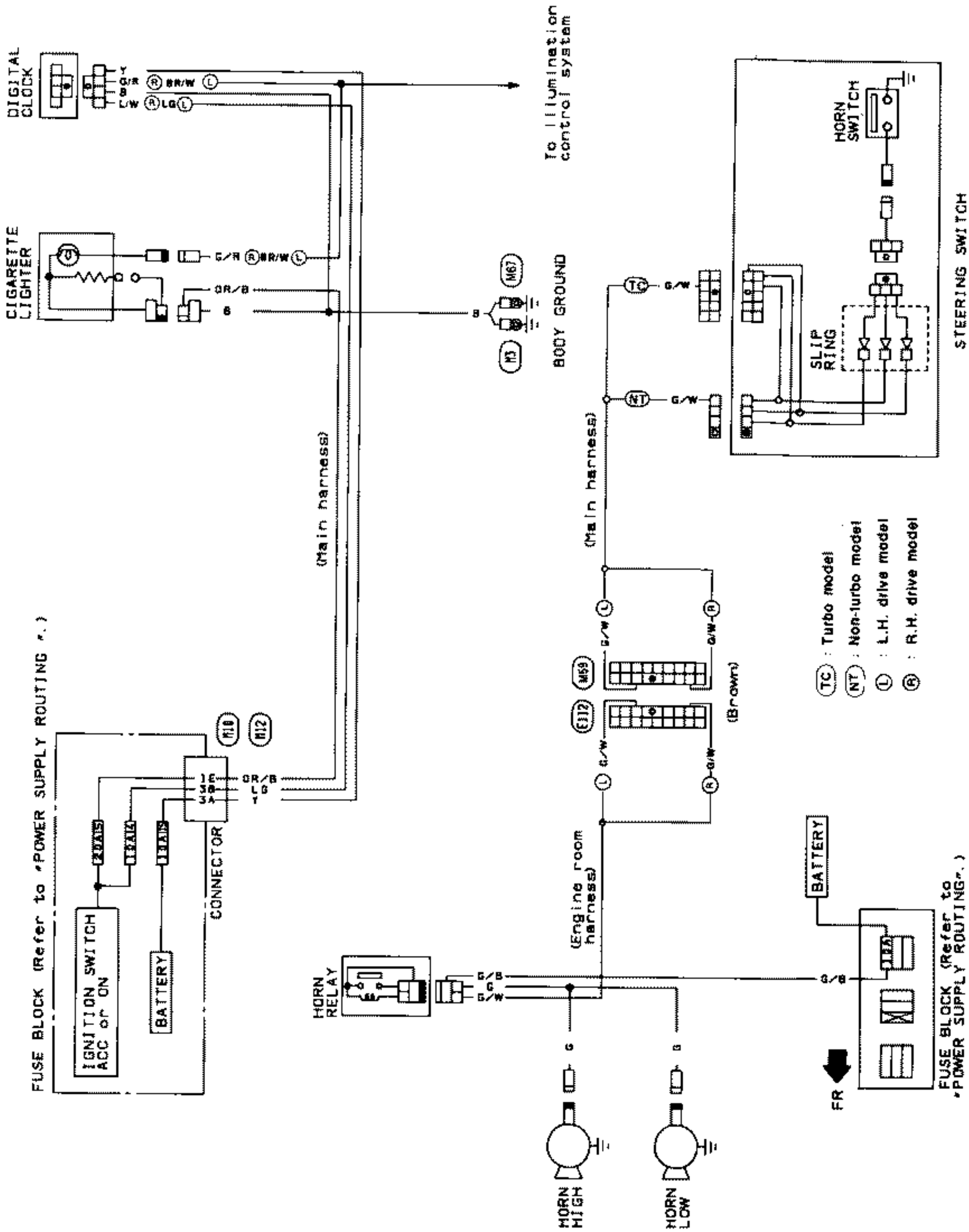

SEL344P

Wiring Diagram

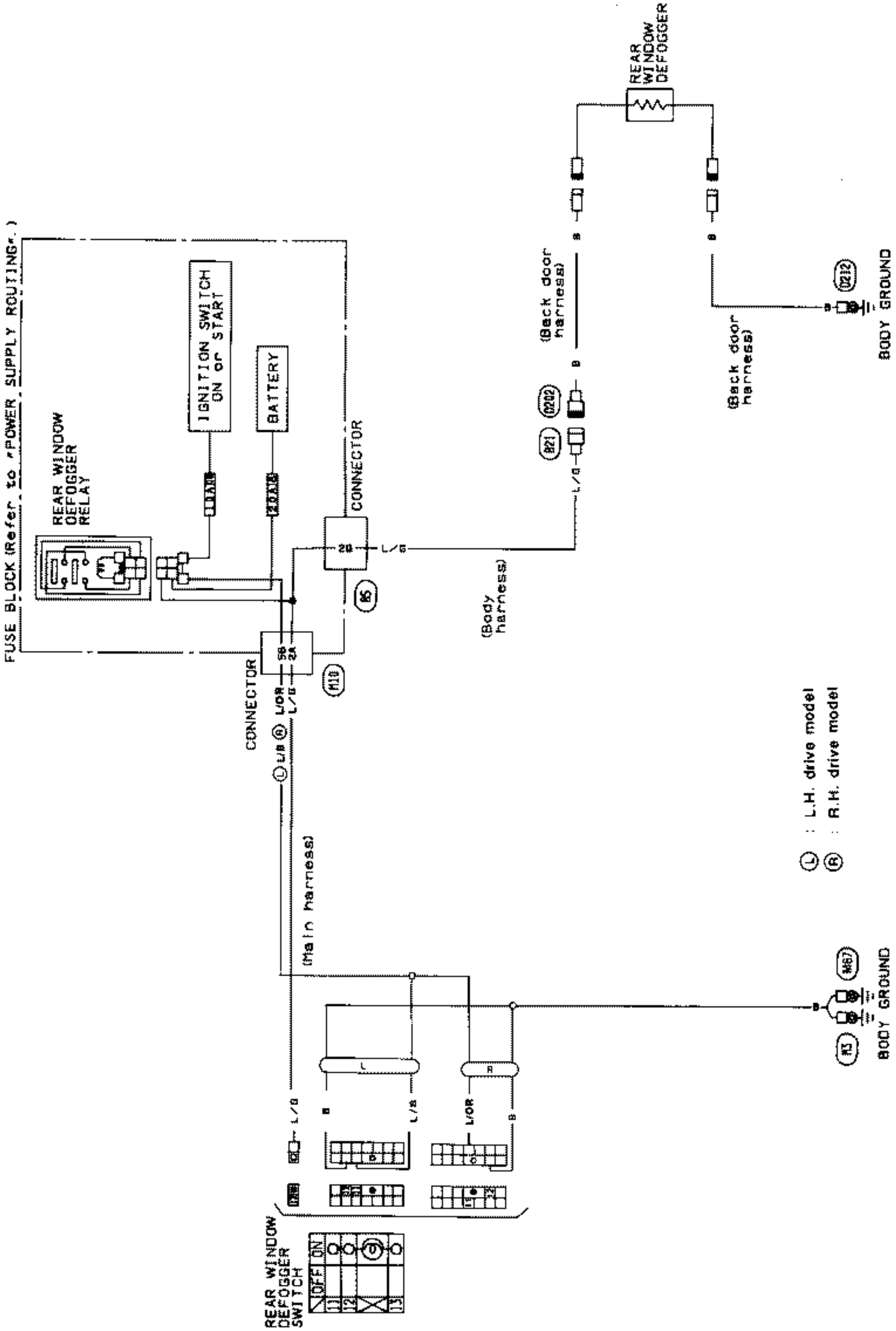

SEL345P

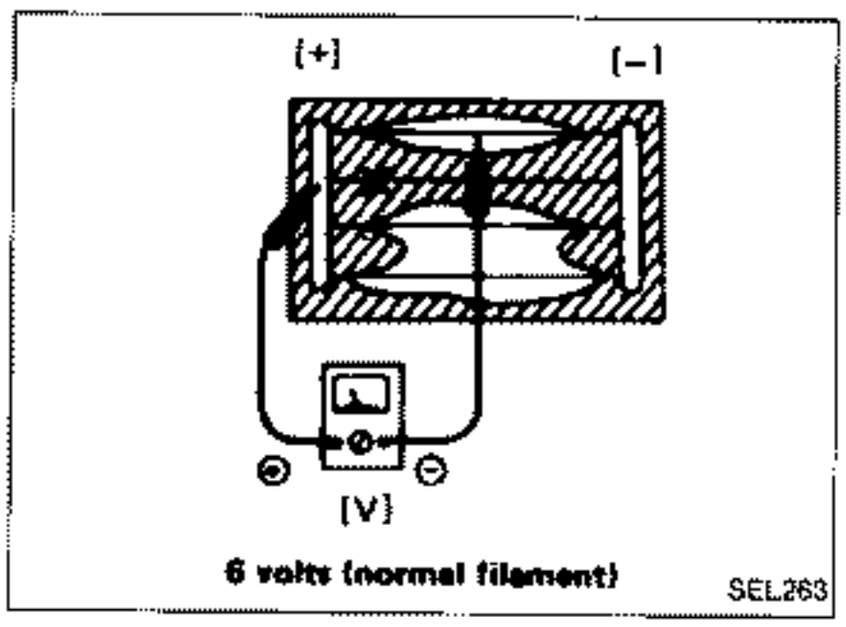

Filament Check

1. Attach probe circuit tester (in volt range) to middle portion of each filament.

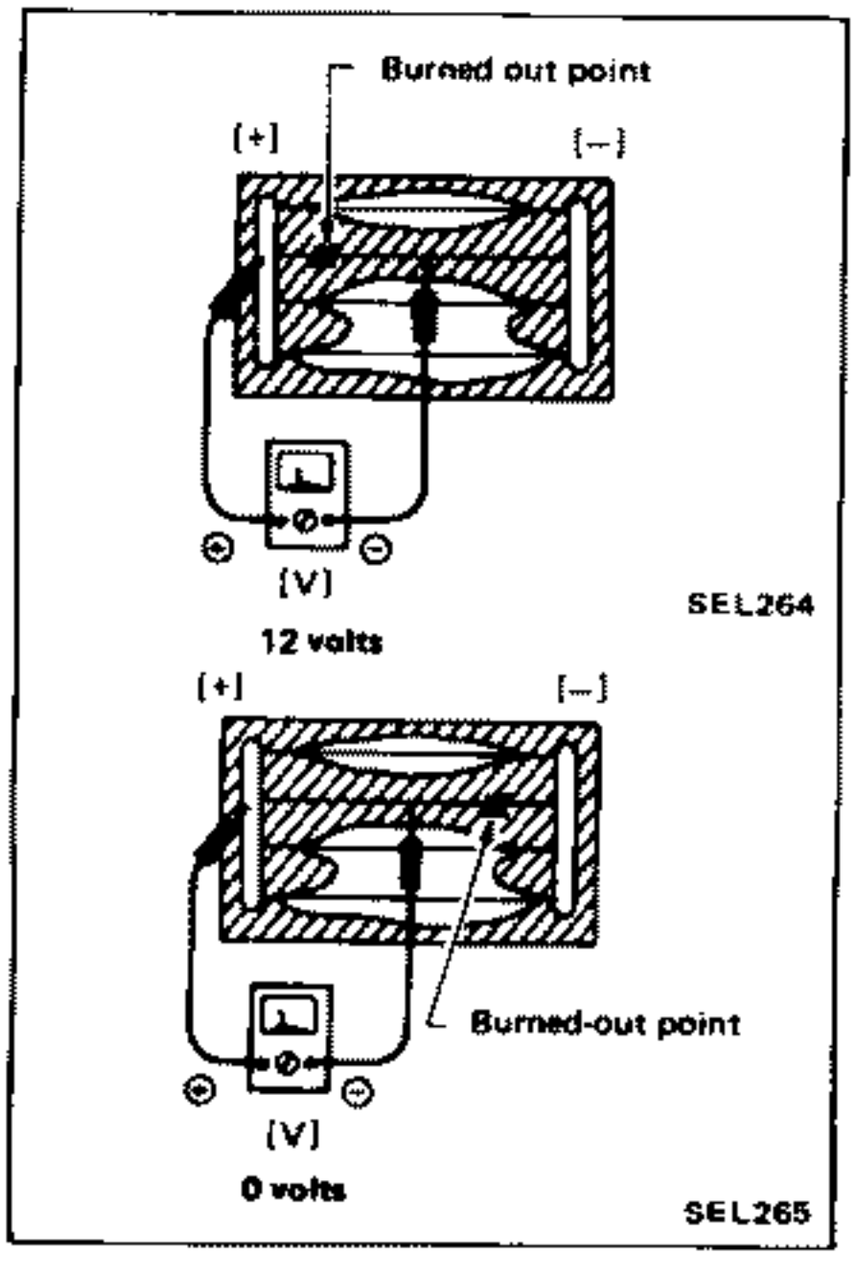

2. If a filament is burned out, circuit tester registers 0 or 12 volts.

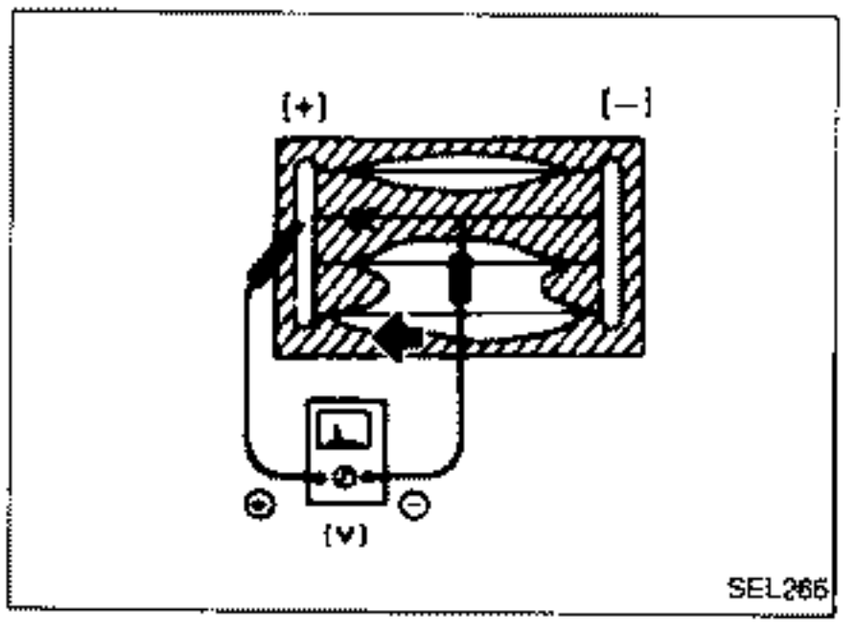

3. To locate burned out point, move probe to left and right along filament to determine point where tester needle swings abruptly.

Filament Repair

REPAIR EQUIPMENT

1. Conductive silver composition (Dupont No. 4817 or equivalent)
2. Ruler 30 cm (11.8 in) long
3. Drawing pen
4. Heat gun
5. Alcohol
6. Cloth

Filament Repair (Cont'd)

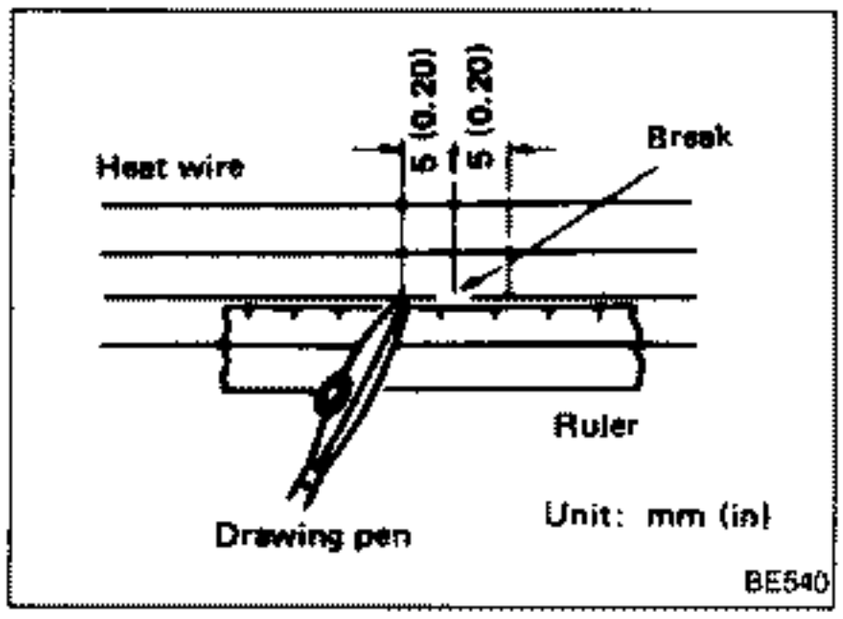

REPAIRING PROCEDURE

1. Wipe broken heat wire and its surrounding area clean with a cloth dampened in alcohol.
2. Apply a small amount of conductive silver composition to tip of drawing pen.

Shake silver composition container before use.

3. Place ruler on glass along broken line. Deposit conductive silver composition on break with drawing pen. Slightly overlap existing heat wire on both sides [preferably 5 mm (0.20 in)] of the break.
4. After repair has been completed, check repaired wire for continuity. This check should be conducted 10 minutes after silver composition is deposited.

Do not touch repaired area while test is being conducted.

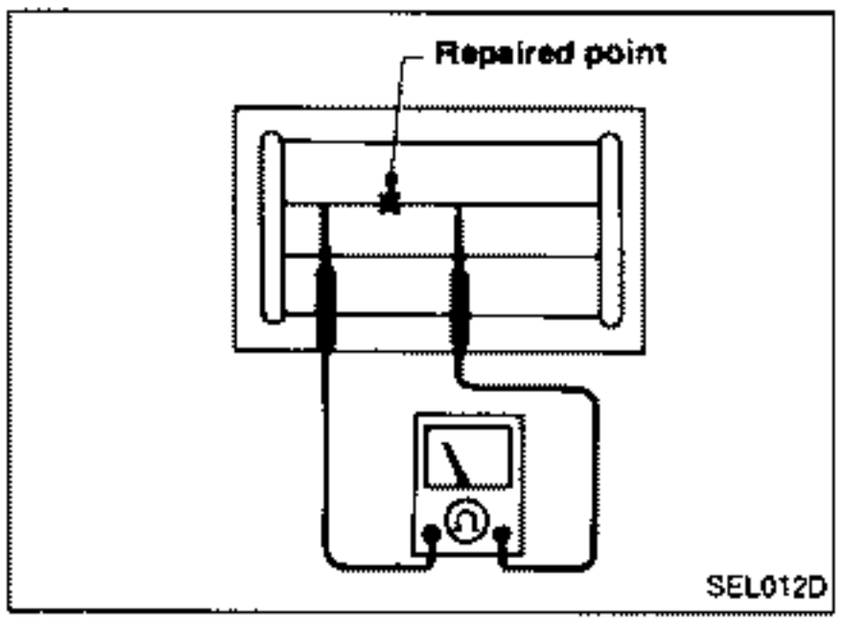

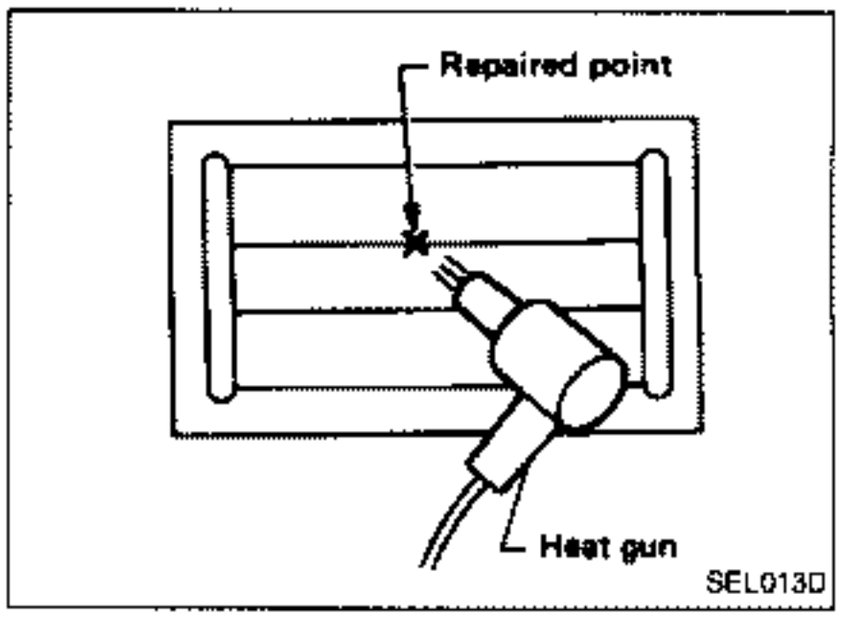

5. Apply a constant stream of hot air directly to the repaired area for approximately 20 minutes with a heat gun. A minimum distance of 3 cm (1.2 in) should be kept between repaired area and hot air outlet. If a heat gun is not available, let the repaired area dry for 24 hours.

Audio/Wiring Diagram

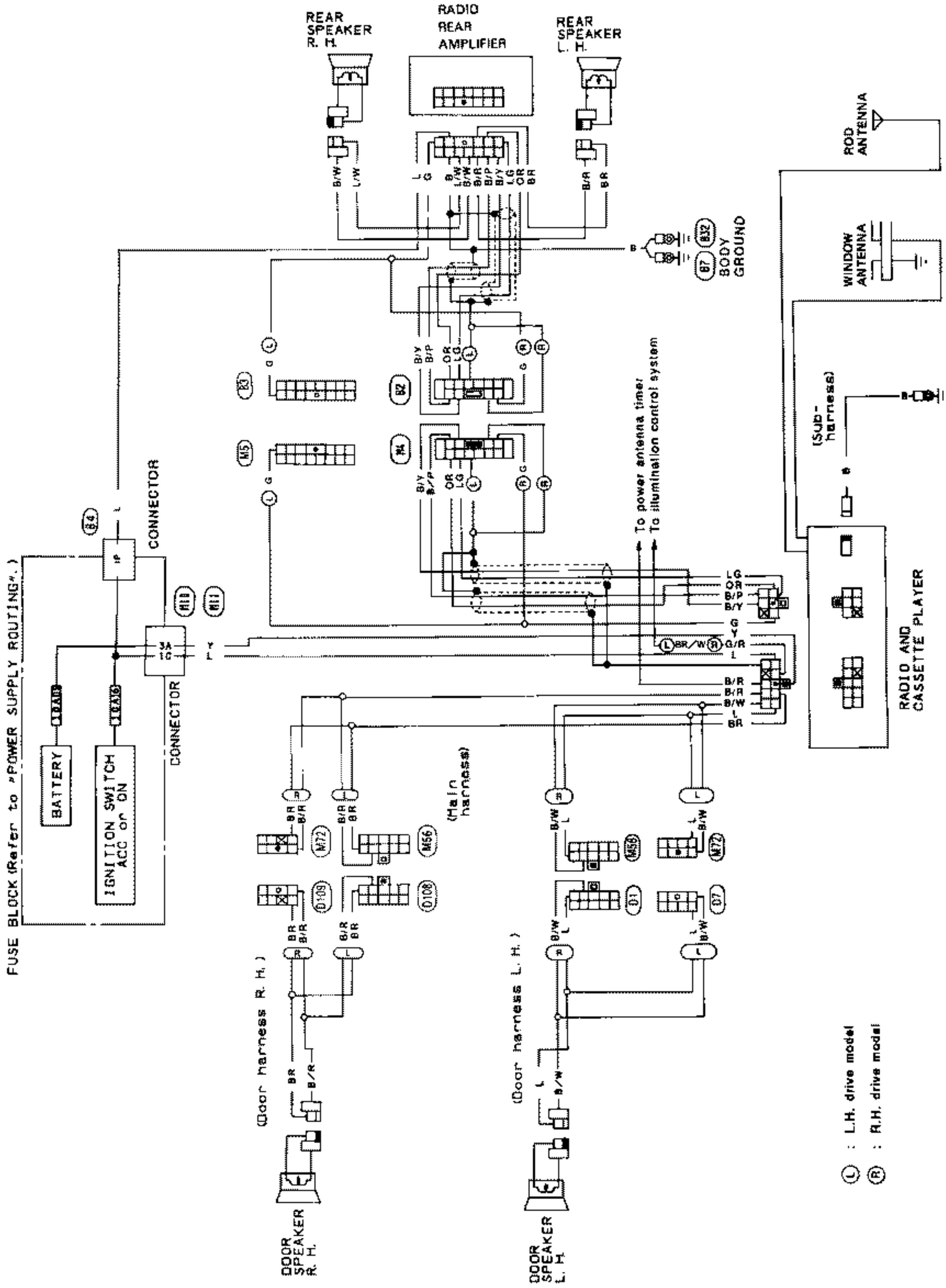

(L) : L.H. drive model
(R) : R.H. drive model

SEL346P

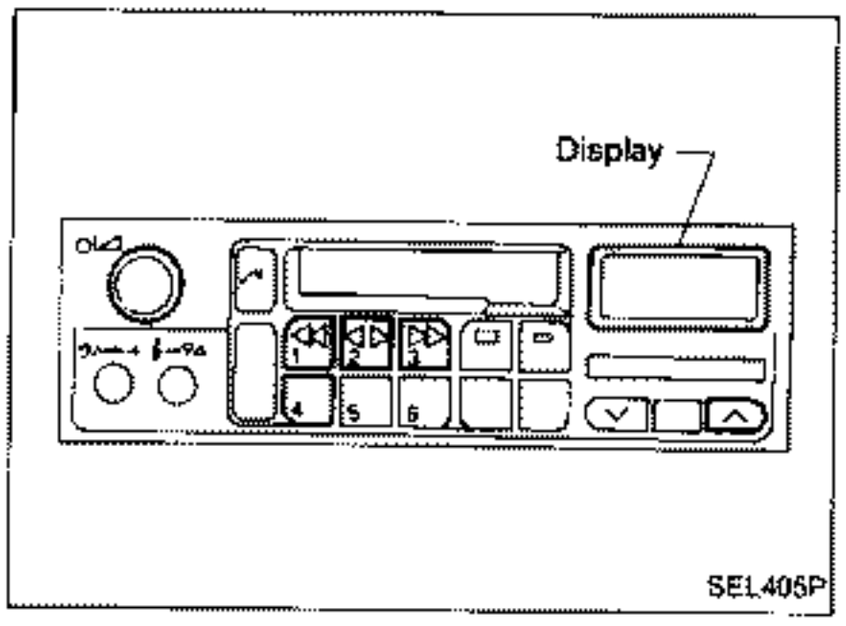

Radio

ANTI-THEFT SYSTEM

By using a personal 4-digit code known only to the vehicle owner, the possibility of the audio unit being stolen is effectively reduced, because without the code the unit can not be activated. When in normal use, the unit is unlocked and accessible in the usual way.

If however, someone attempts to remove the unit or the ground cable is disconnected from the battery, the Anti-theft system activates and the unit "locks". The only way it can be unlocked is by entering a personal code number known only by the owner.

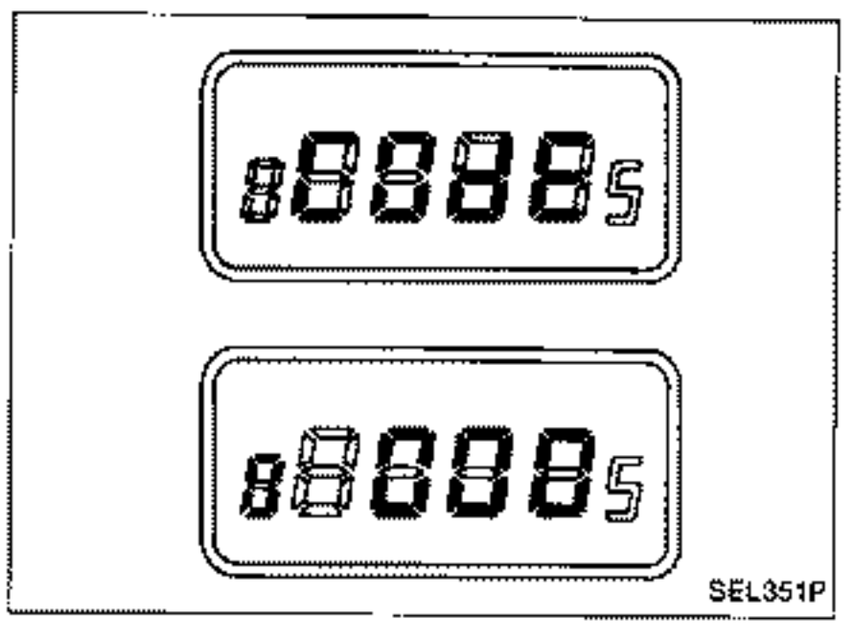

UNLOCKING THE UNIT (How to enter a personal code number)

Use the following procedures to enter a personal code number into the radio.

1. Turn ignition switch to "ACC" or "ON".
2. Turn SW. VOL knob to "ON" and "CODE" will appear on the display.
3. Press any button (except "eject") and "0000" will appear on the display.

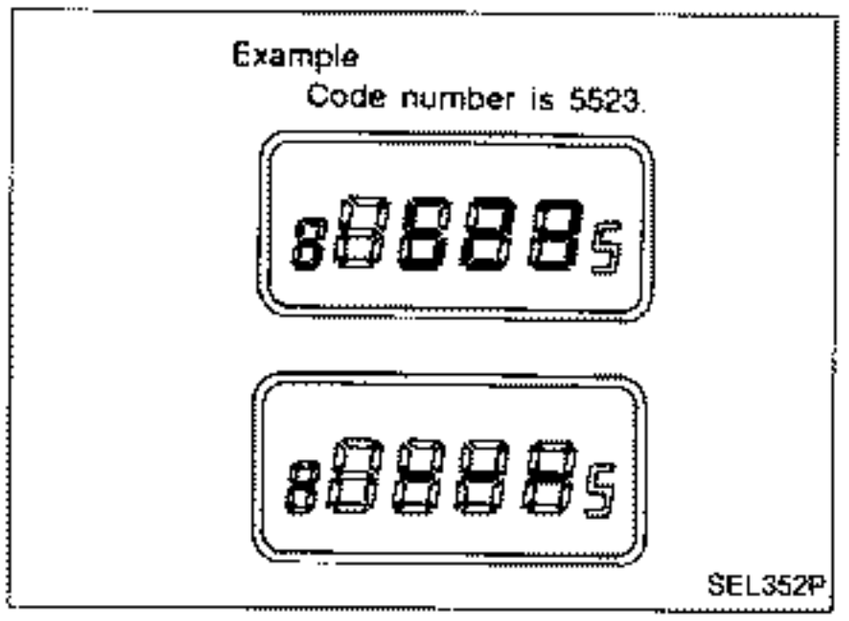

4. Enter a personal code number by pressing station select buttons 1, 2, 3,4 the required number of times to display the code.
5. Press [^] to enter the code.
   Unit is unlocked and the radio/cassette will operate.
   If the wrong code number is entered, the display shows "- - - -". Wait ten seconds then enter the correct code.

CAUTION:

There are two ten second waiting periods after a wrong code number has been entered. There then follows twenty waiting periods of fifteen minutes duration.

After that, if wrong code is entered, the unit will lock permanently.

Power Antenna/Wiring Diagram

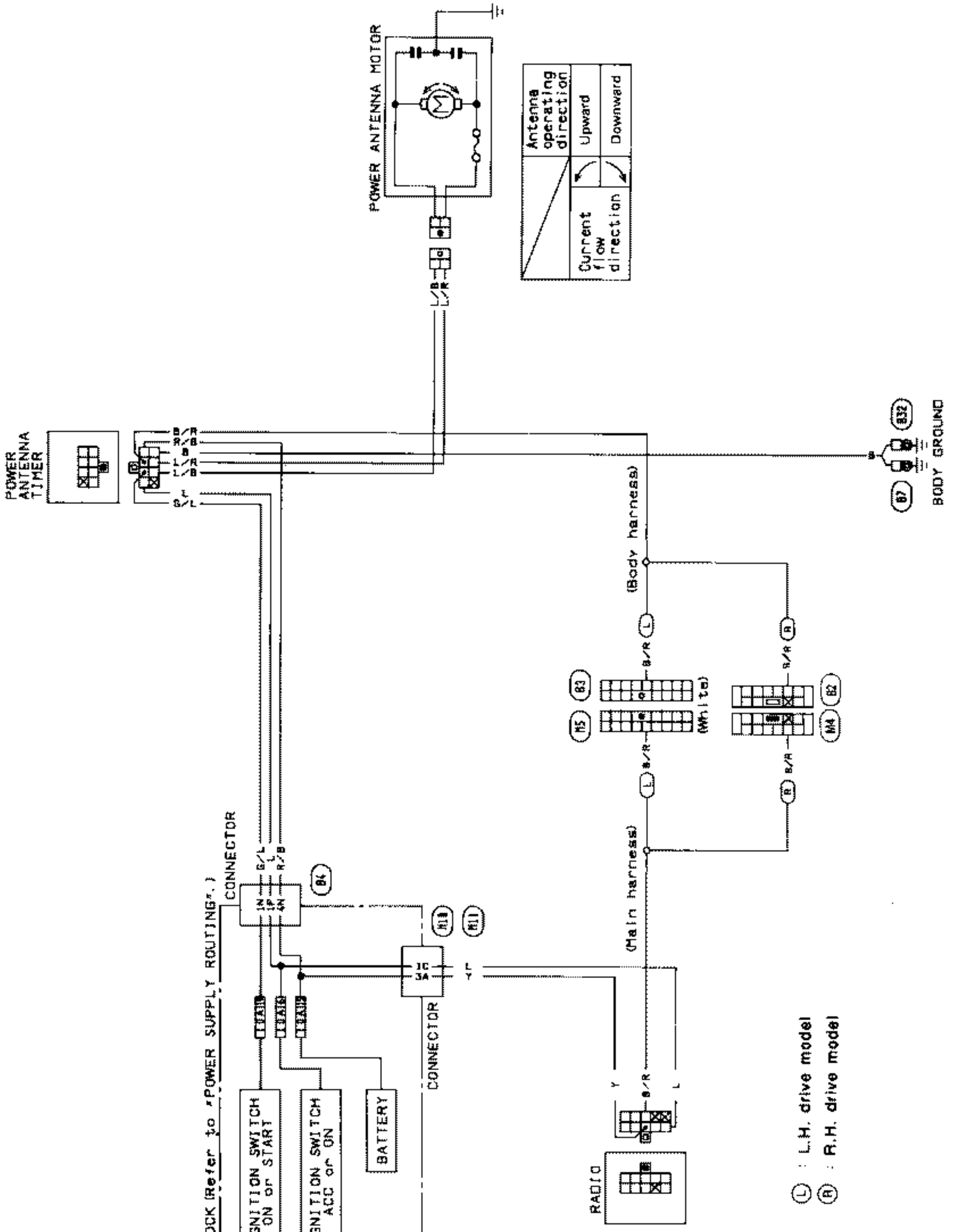

SEL347P

Location of Antenna

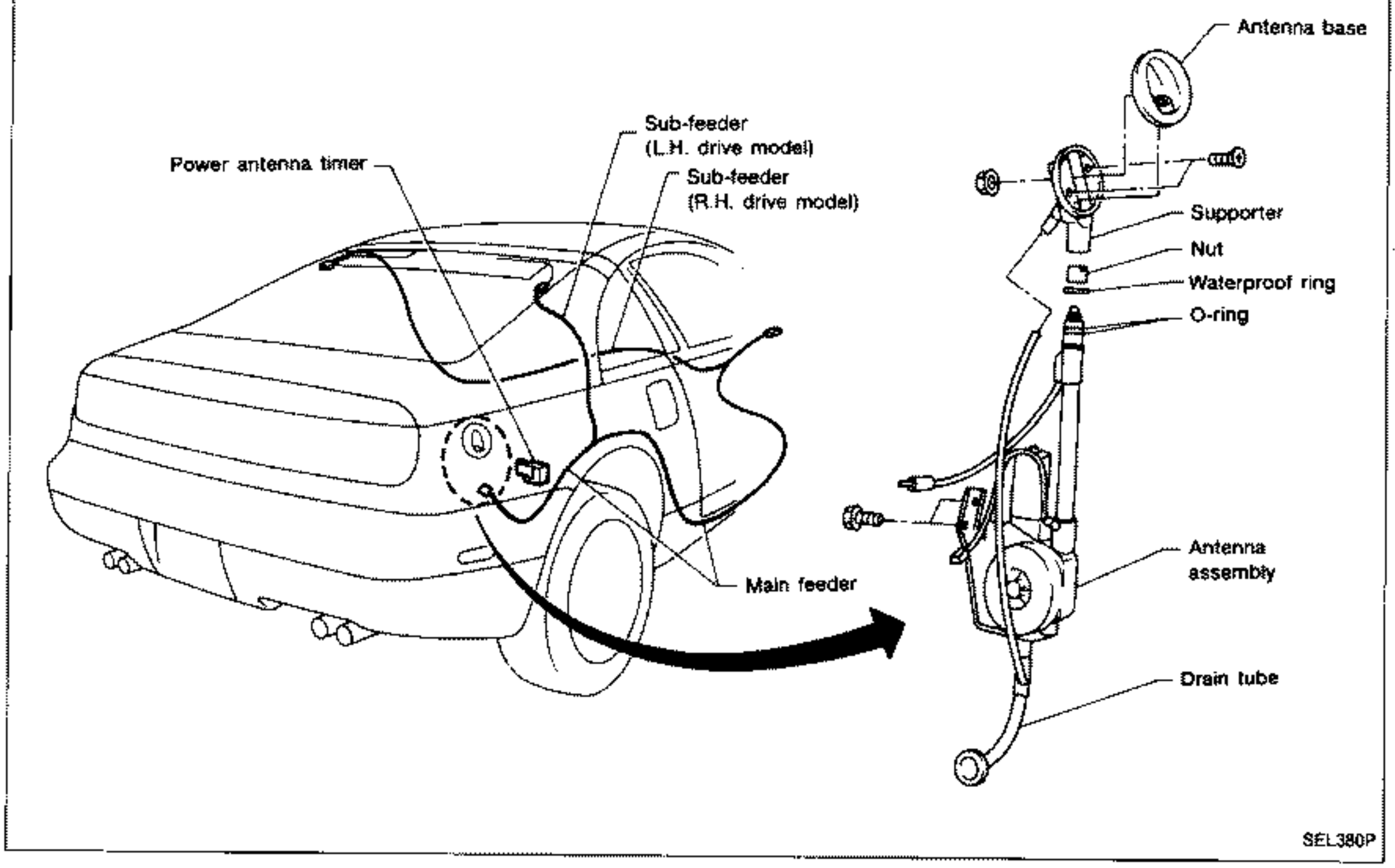

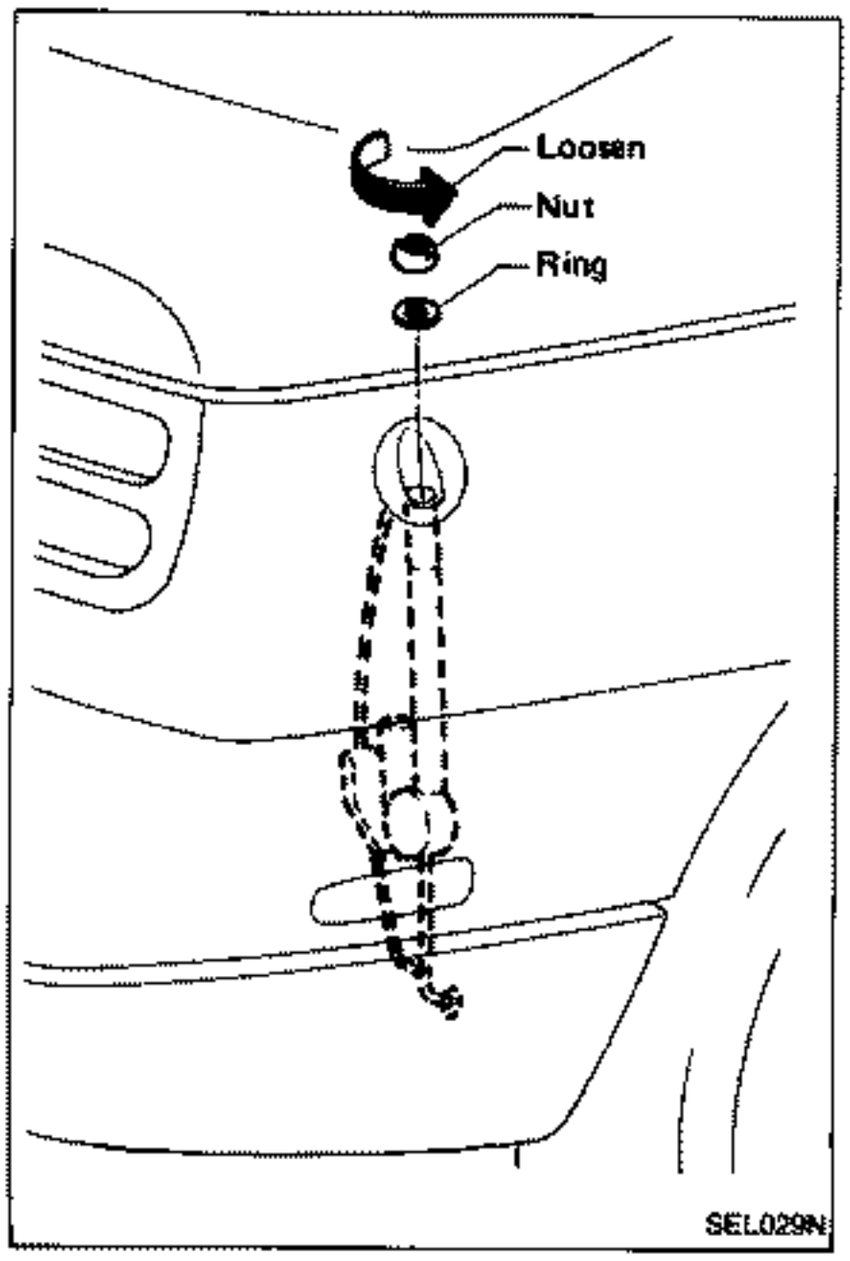

Antenna Rod Replacement

REMOVAL

1. Remove antenna nut and antenna base.

Antenna Rod Replacement (Cont'd)

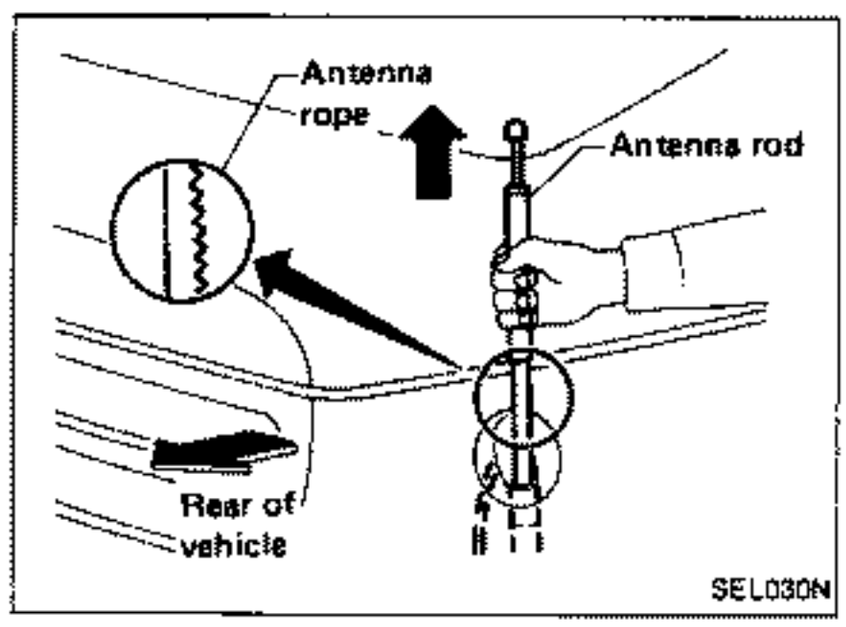

2. Withdraw antenna rod while raising it by operating antenna motor.

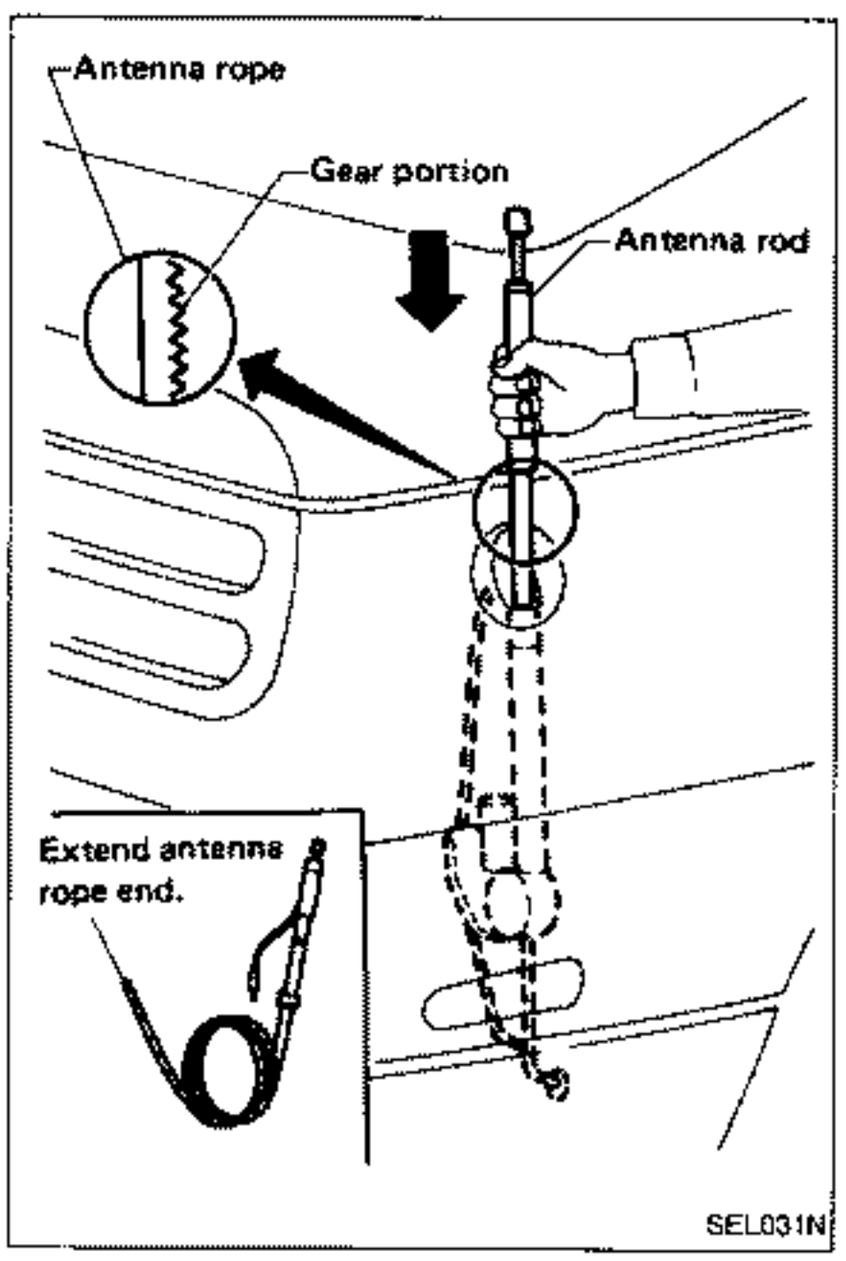

INSTALLATION

1. Lower antenna rod by operating antenna motor.
2. Insert gear section of antenna rope into place with it facing toward antenna motor.
3. As soon as antenna rope is wound on antenna motor, stop antenna motor. Insert antenna rod lower end into antenna motor pipe.
4. Retract antenna rod completely by operating antenna motor.
5. Install antenna nut and base.

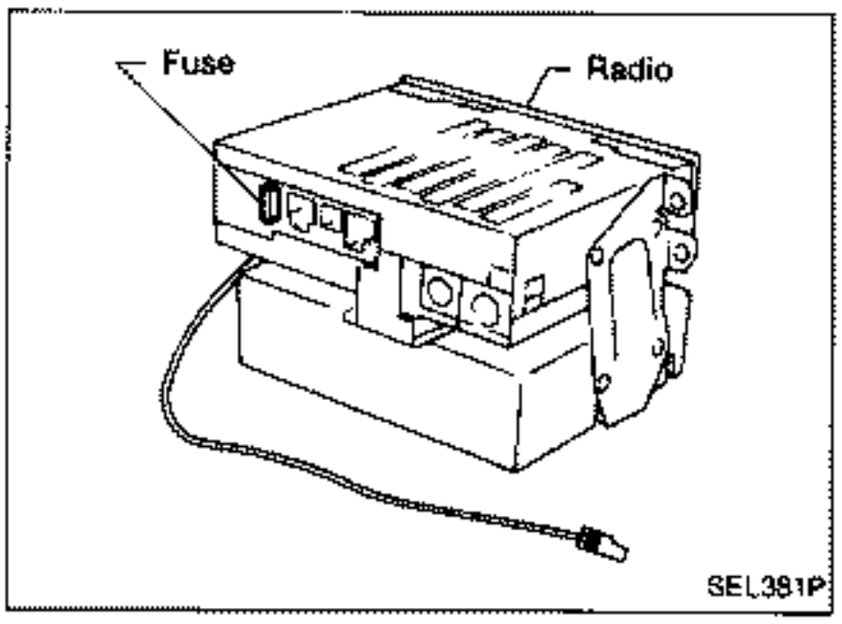

Radio Fuse Check

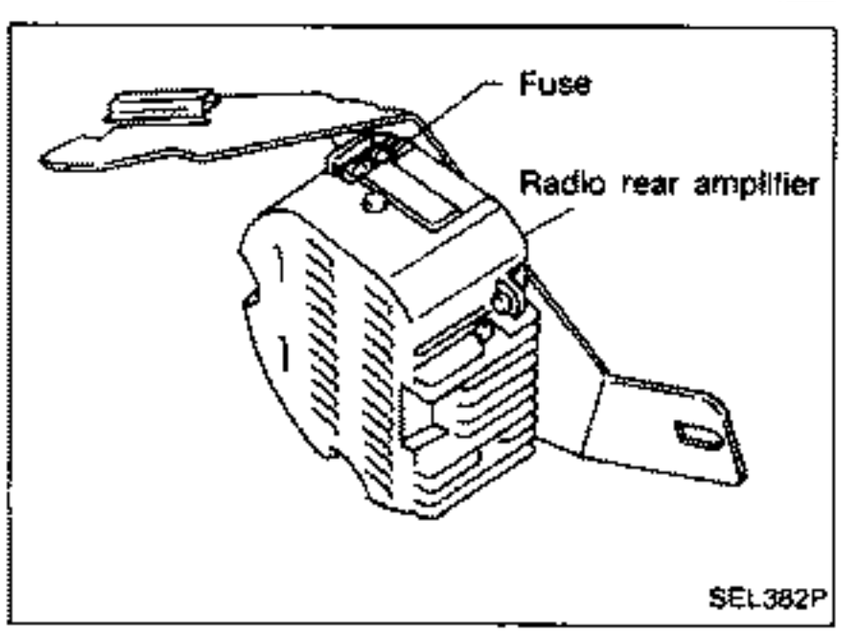

Radio Rear Amplifier Check

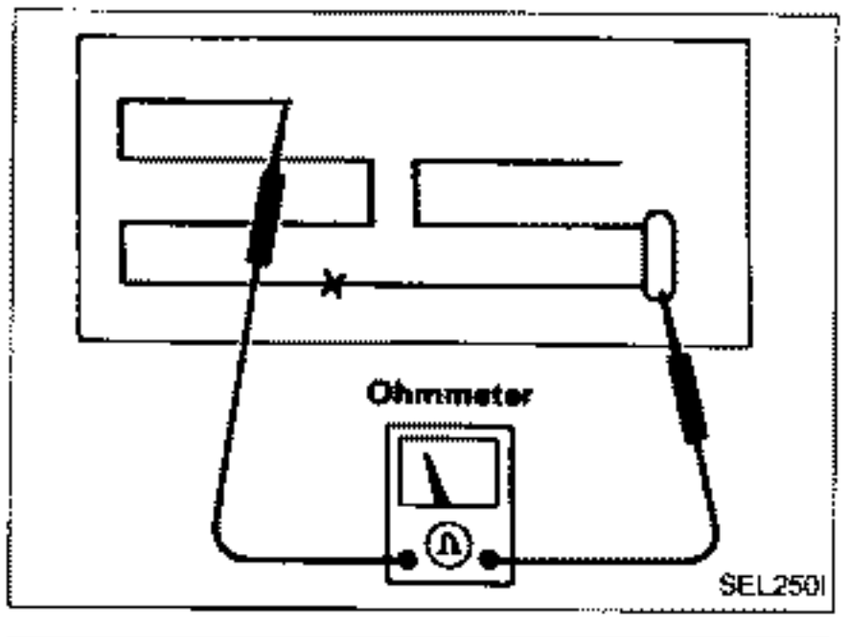

Window Antenna Repair

ELEMENT CHECK

1. Attach probe circuit tester (in ohm range) to antenna terminal on each side.

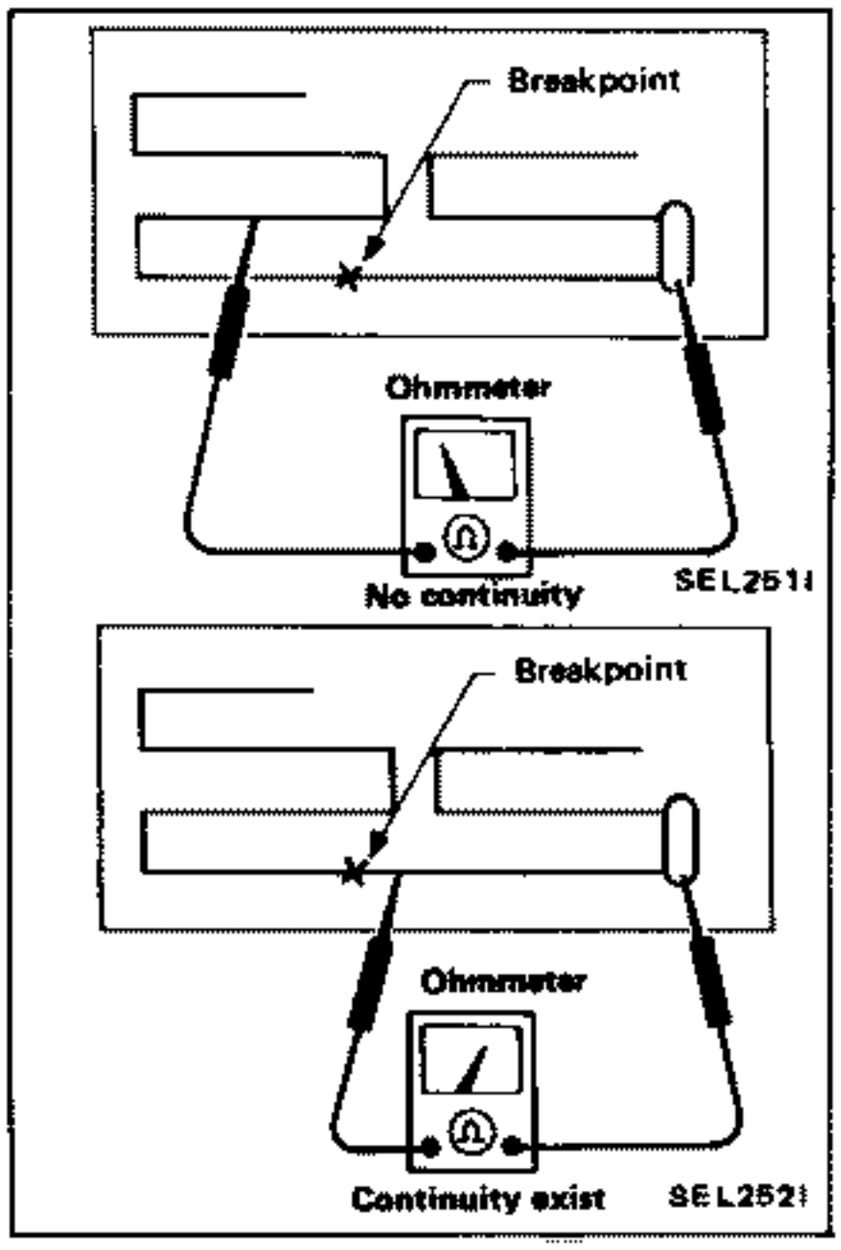

2. If an element is broken, no continuity will exist.

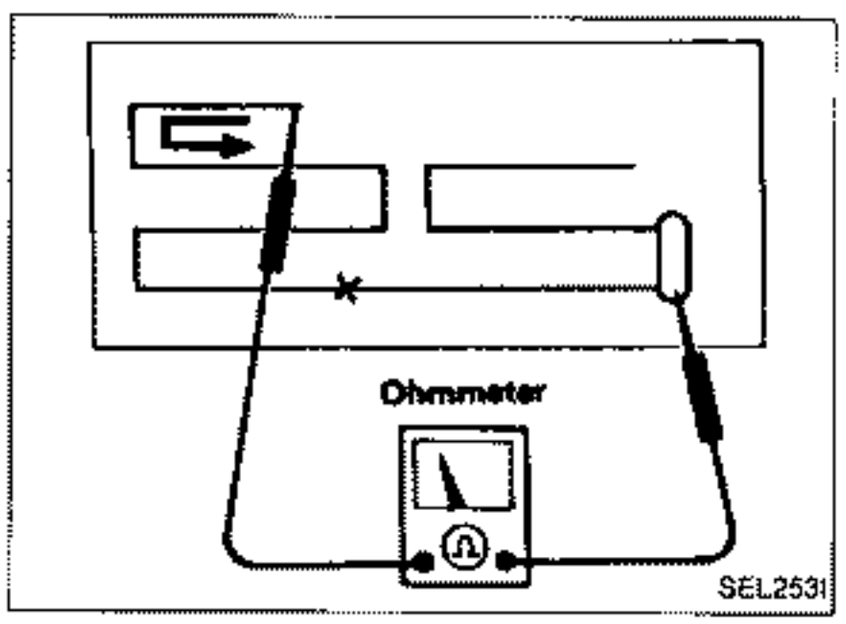

3. To locate broken point, move probe to left and right along element to determine point where tester needle swings abruptly.

ELEMENT REPAIR

Refer to REAR WINDOW DEFOGGER "Filament Repair".

Schematic

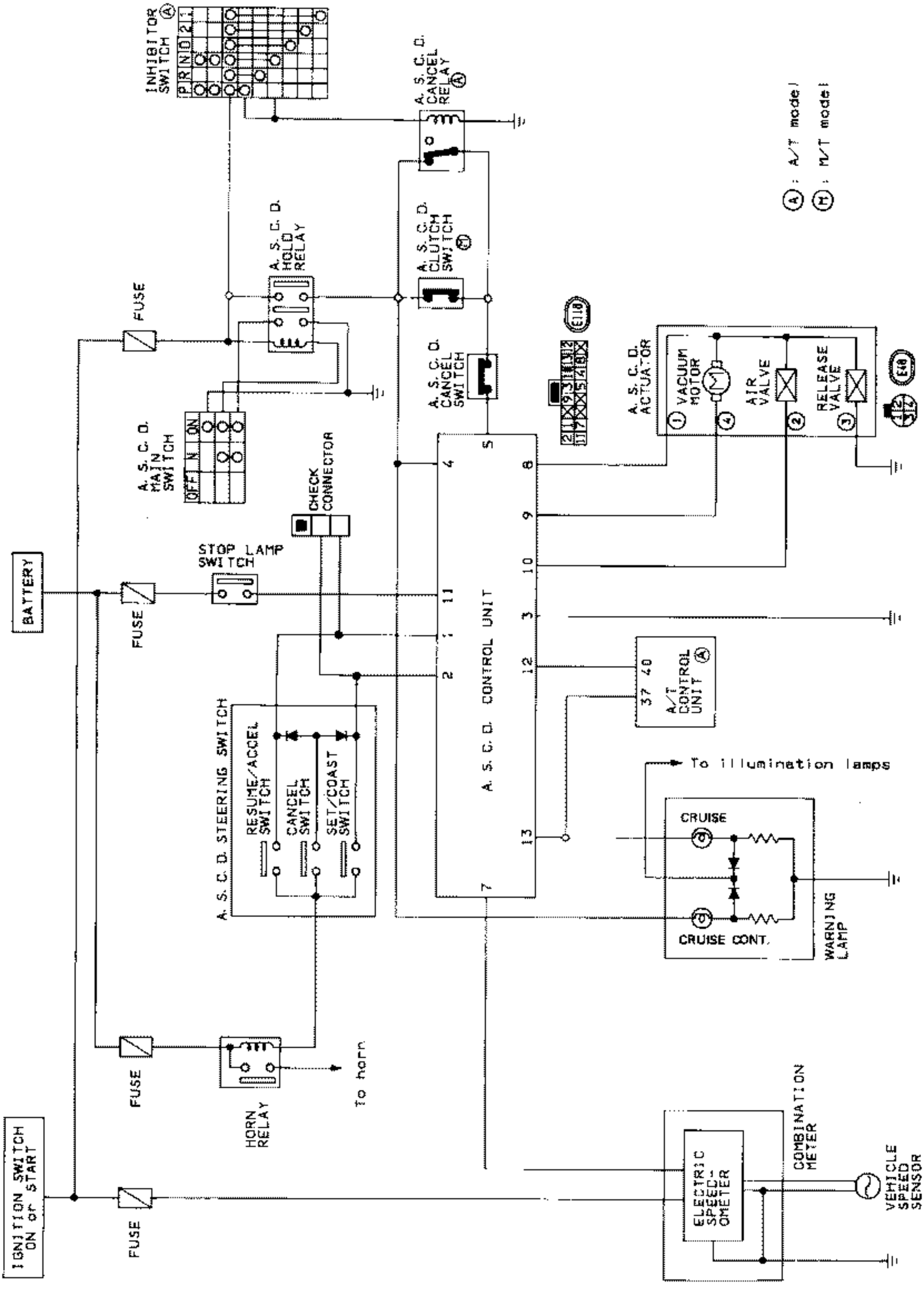

SEL348P

Wiring Diagram

L.H. DRIVE MODELS

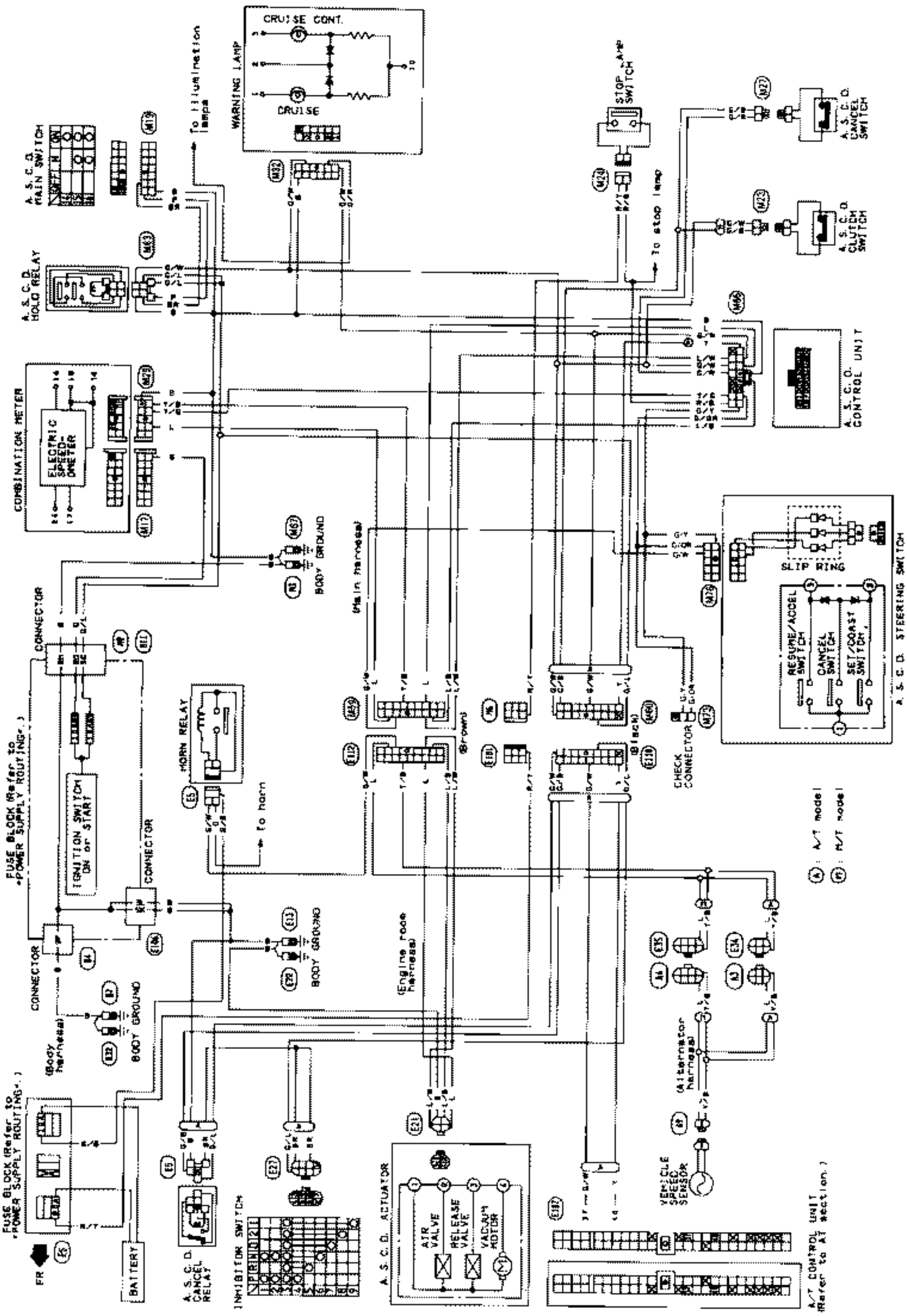

SEL349P

Wiring Diagram (Cont'd)

R.H. DRIVE MODELS

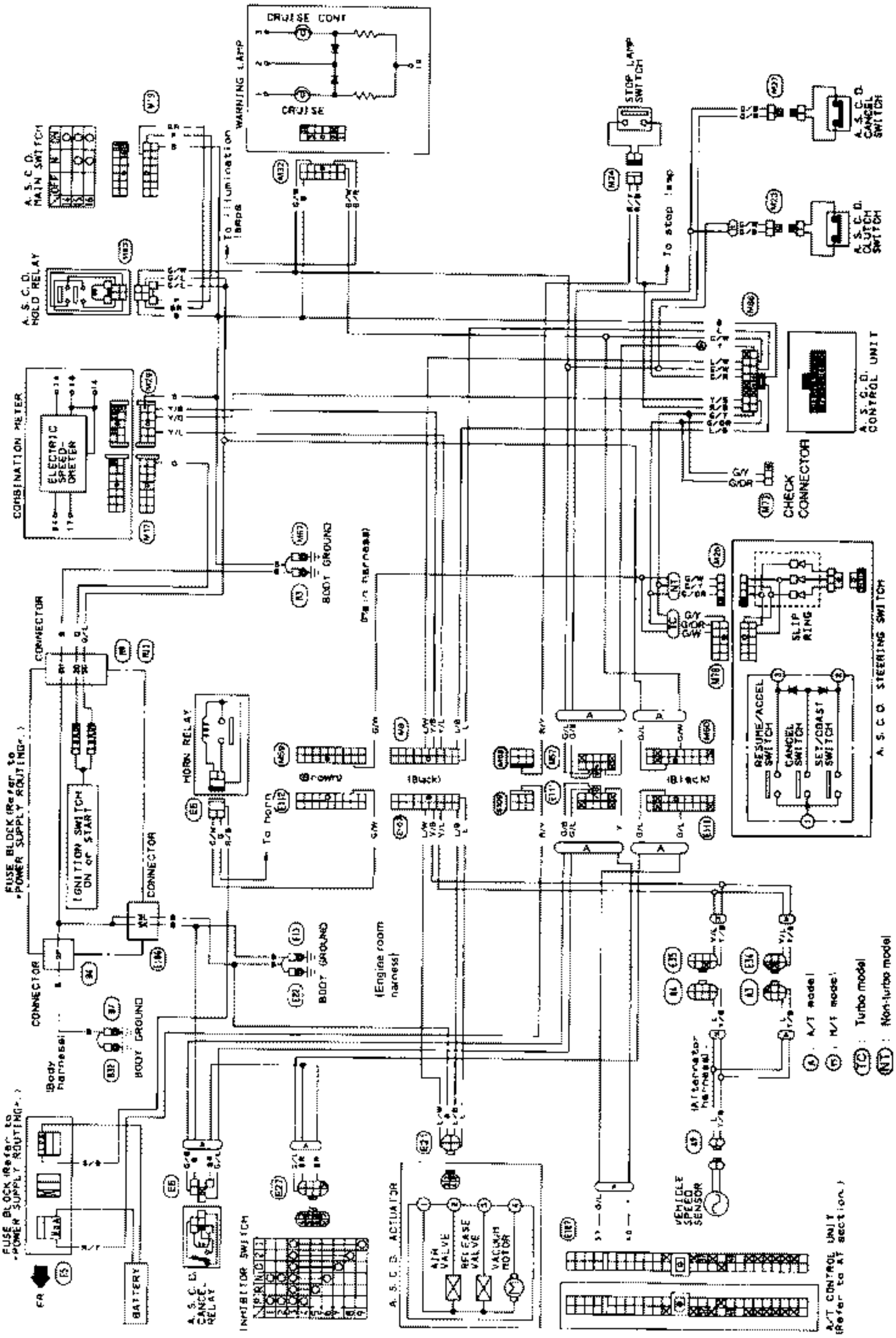

SEL350P

A.S.C.D. Wire Adjustment

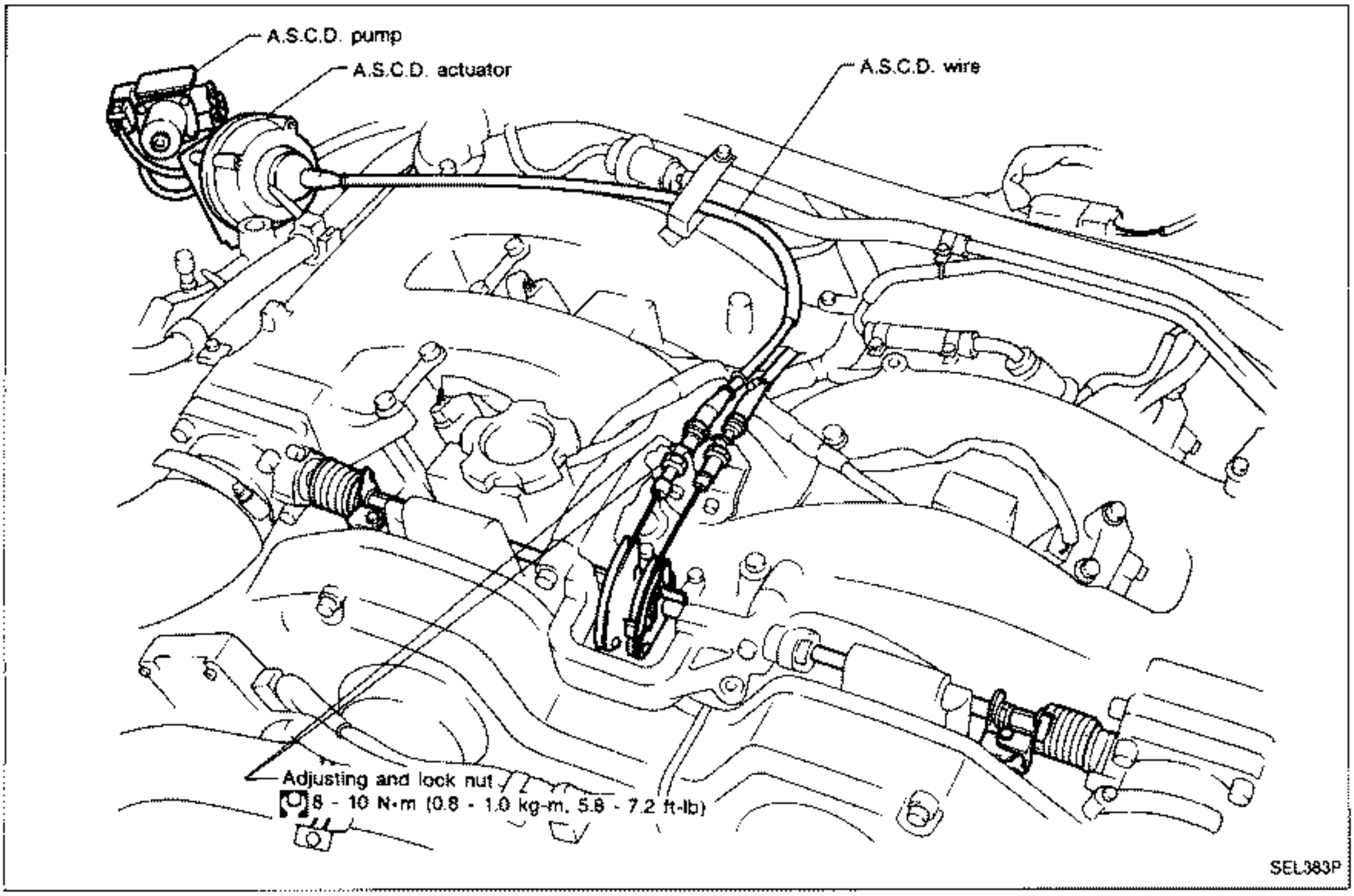

CAUTION:

- **Be careful not to twist A.S.C.D. wire when removing it.**
- **Do not tense A.S.C.D. wire excessively during adjustment.**

After confirming that accelerator wire is properly adjusted, adjust the tension of A.S.C.D. wire in the following manner.

(1) After adjusting the length of the accelerator wire, turn a securing nut by 1/2 to 1 turn from throttle open starting position to the wire loosening direction to fix. (Must be securing carried out to prevent response delay of operation of the A.S.C.D.)
(2) Securely tighten lock nut to hold adjusting nut in place.

- For A.S.C.D. stop switch and clutch switch adjustment, refer to BR and CL sections.

Trouble Diagnoses

Symptom	DIAGNOSTIC PROCEDURE
A.S.C.D. control unit cannot be set properly.	1
Resume switch will not operate.	2
Cancel switch will not operate.	3
Engine hunts.	4
Large difference between set vehicle speed and actual speed.	5
Set speed cannot be canceled.	6

PREPARATION FOR TROUBLE-DIAGNOSIS

1. Remove lower trim.
2. Remove A.S.C.D. control unit with harness connected.
3. Perform check from harness side using circuit tester, with harness connector connected.

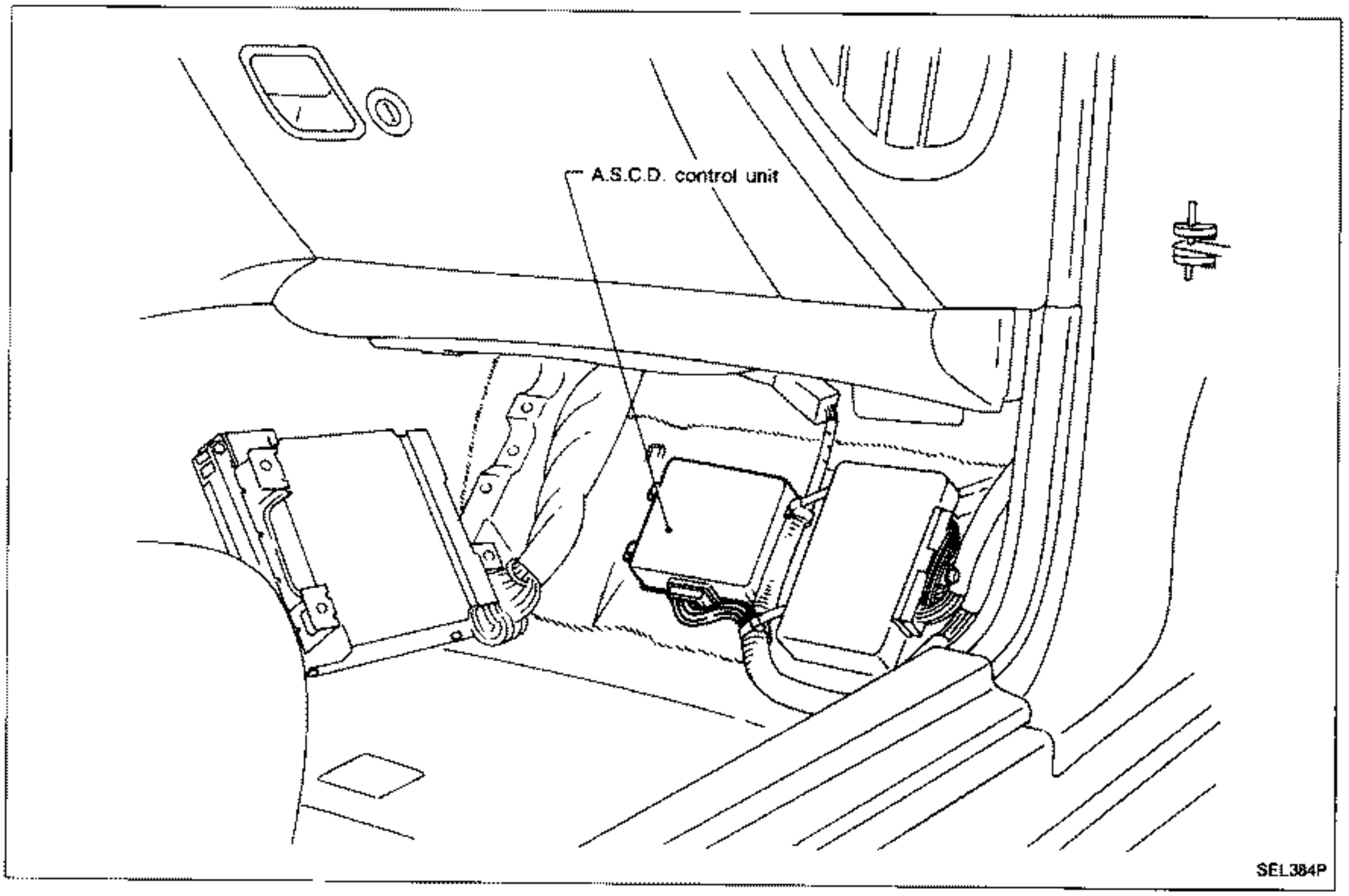

GROUND CIRCUIT CHECK

- Check continuity between ③ and body ground.

Trouble Diagnoses (Cont'd)

DIAGNOSTIC PROCEDURE-1

A.S.C.D. control unit cannot be set properly.

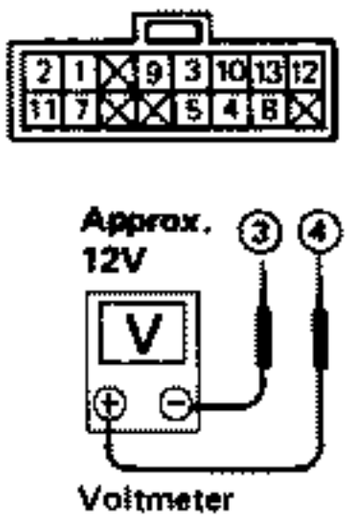

POWER SUPPLY CIRCUIT CHECK

1. Turn A.S.C.D. main switch to "ON".
2. Check voltage between ④ and ③.

CUT-OFF CIRCUIT CHECK

1. Step on brake pedal.
2. Turn A.S.C.D. main switch to "ON".
3. Check voltage between ⑪ and ③.

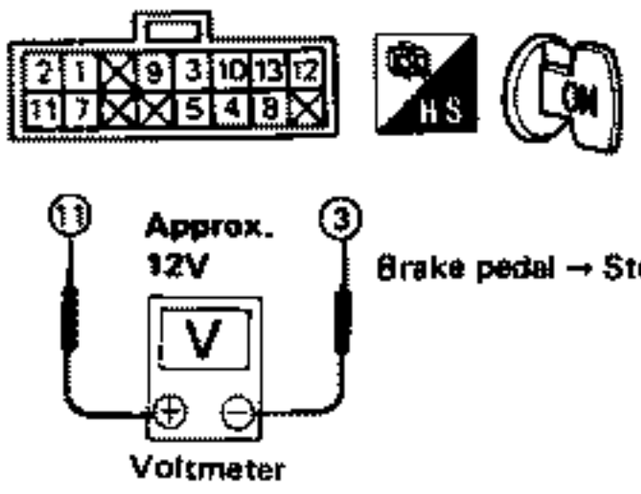

SEL629L

SET SWITCH CIRCUIT CHECK

1. Push A.S.C.D. set switch.
2. Check voltage between ② and ③.

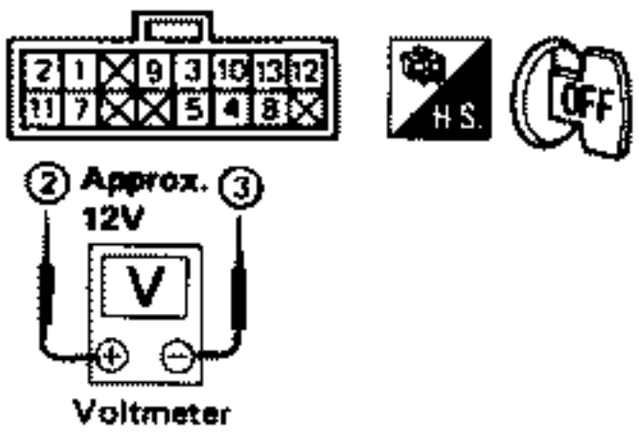

SPEED SENSOR CIRCUIT CHECK

1. Disconnect speed sensor from transmission.
2. Connect a voltmeter between ⑦ and ③.
3. Slowly turn speed sensor by hand to make sure voltmeter pointer deflects.

- Voltmeter pointer deflects twice per rotation of pinion.

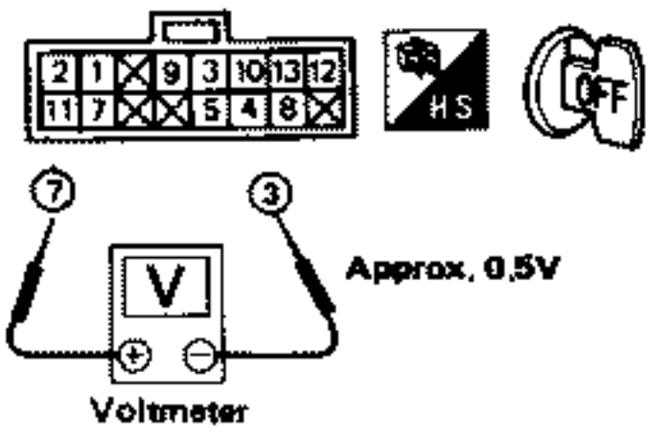

SEL630L

Trouble Diagnoses (Cont'd)

PRESUME SWITCH CIRCUIT CHECK

1. Turn resume switch to "ON".
2. Check voltage between ① and ③.

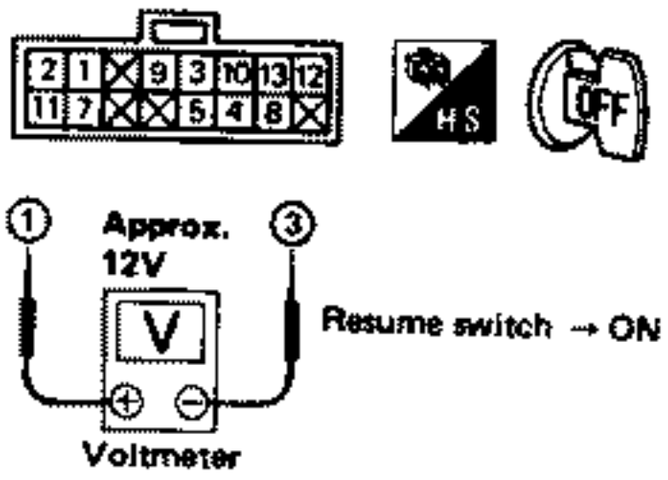

SEL636L

DIAGNOSTIC PROCEDURE-2

Resume switch will not operate.

Check resume switch circuit. → N.G. → Check resume switch.

↓ O.K.

Replace A.S.C.D. control unit.

CANCEL SWITCH CIRCUIT CHECK

1. Turn cancel switch to "ON".
2. Check voltage between ② and ③ or ① and ③.

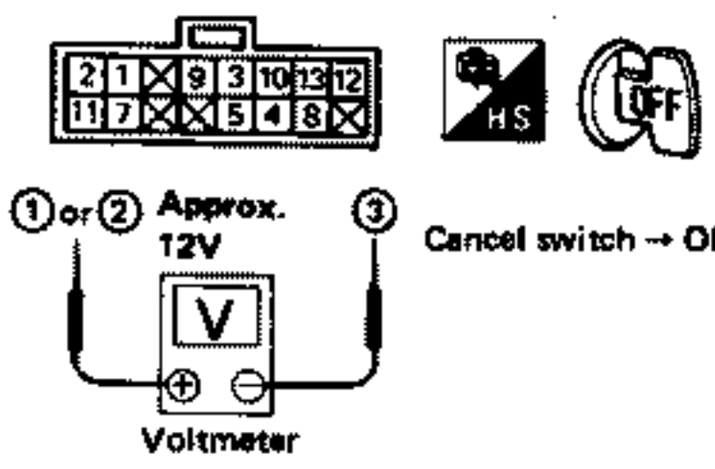

SEL637L

DIAGNOSTIC PROCEDURE-3

Cancel switch will not operate.

Check cancel switch circuit. → N.G. → Check cancel switch.

↓ O.K.

Replace A.S.C.D. control unit.

Trouble Diagnoses (Cont'd)

DIAGNOSTIC PROCEDURE-4

Engine hunts.

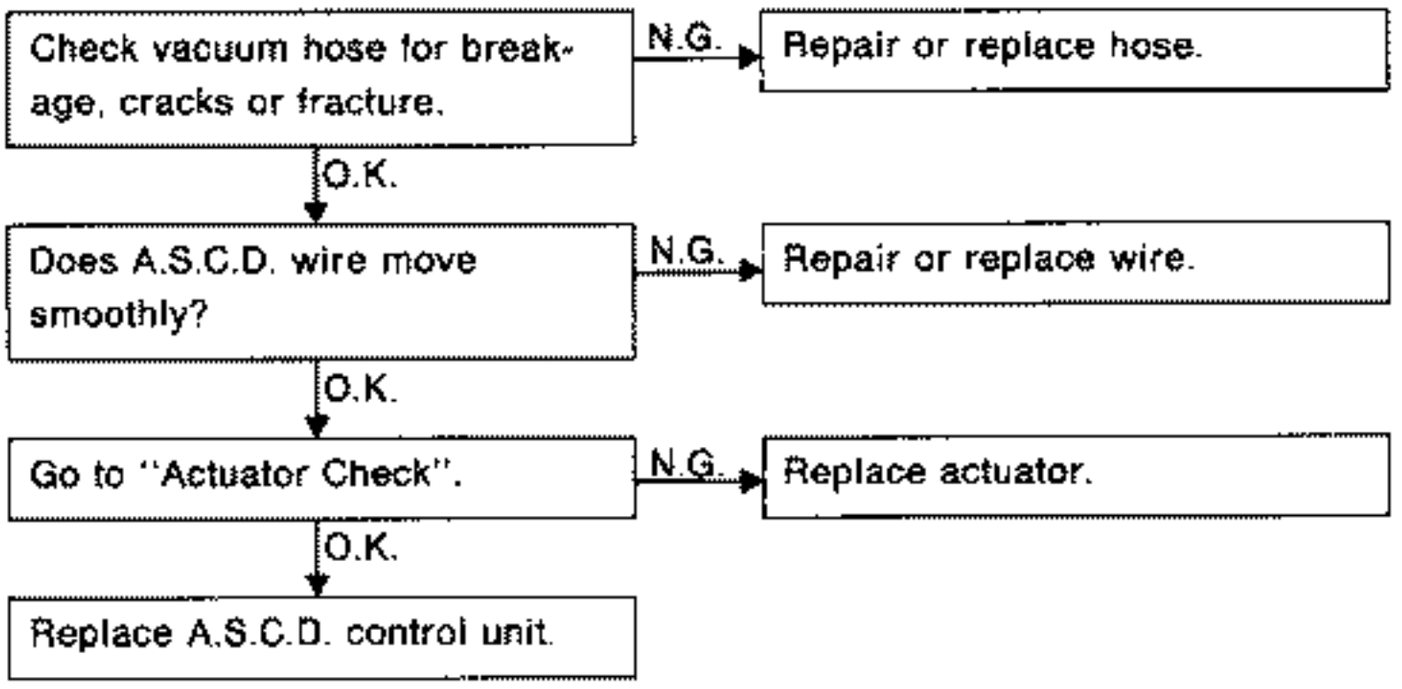

DIAGNOSTIC PROCEDURE-5

Large difference between set vehicle speed and actual speed.

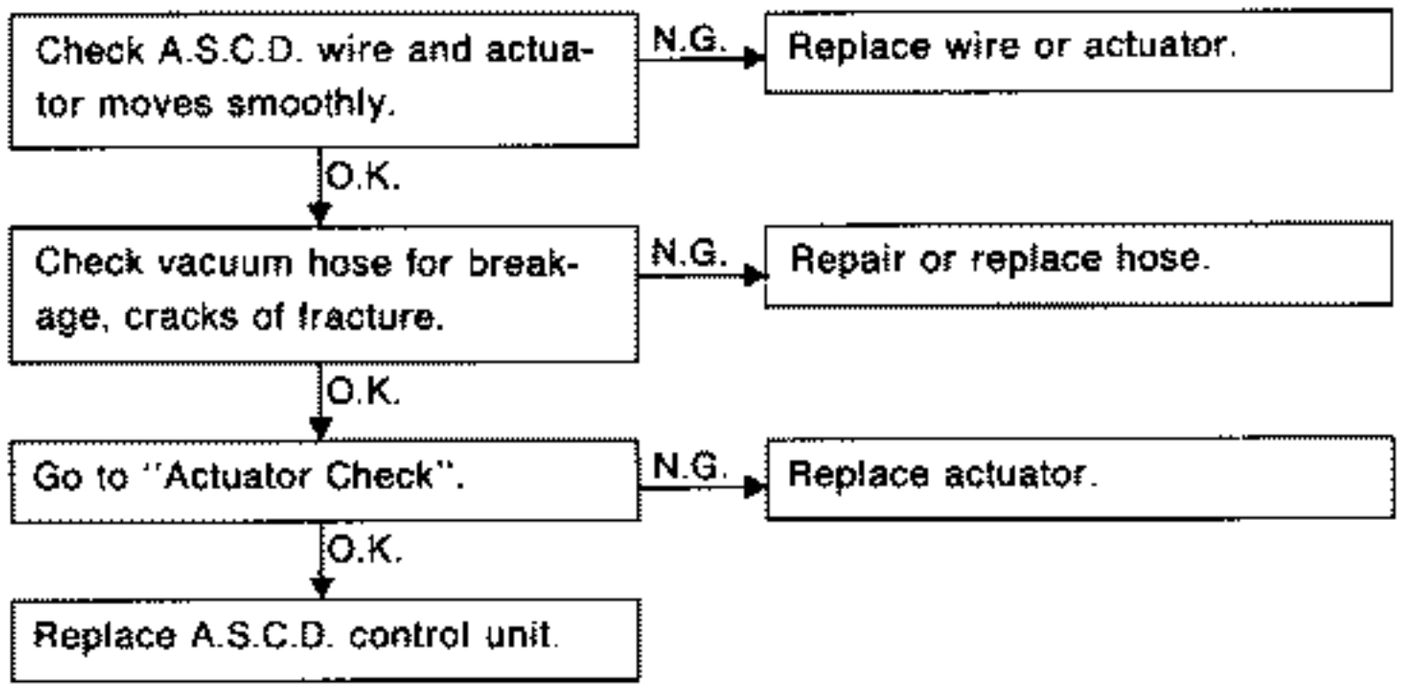

Trouble Diagnoses (Cont'd)

CUT-OFF CIRCUIT CHECK

1. Turn A.S.C.D. main switch to "ON".
2. Turn A.S.C.D. main switch to "ON" again.
3. Step on brake pedal.
4. Step on clutch pedal (M/T) or shift in "N" range (A/T).
5. Check voltage between ⑤ and ③.



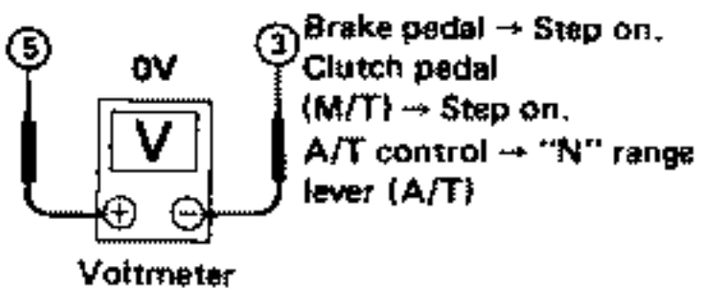

STOP LAMP CIRCUIT CHECK

1. Step on brake pedal.
2. Check voltage between ⑪ and ③.

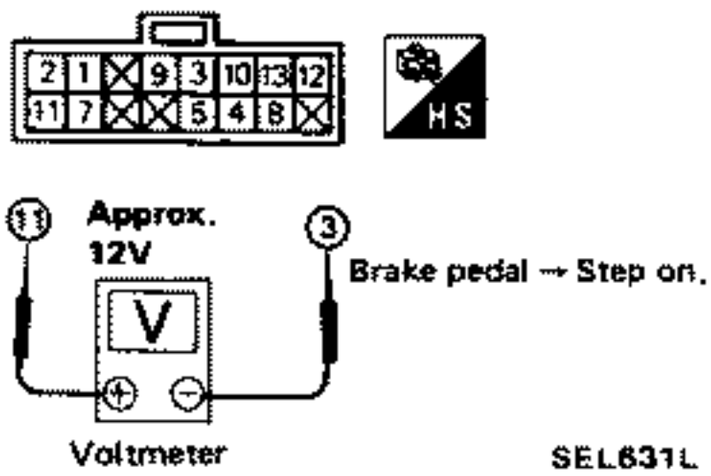

SEL631L

DIAGNOSTIC PROCEDURE-6

Set speed cannot be canceled.

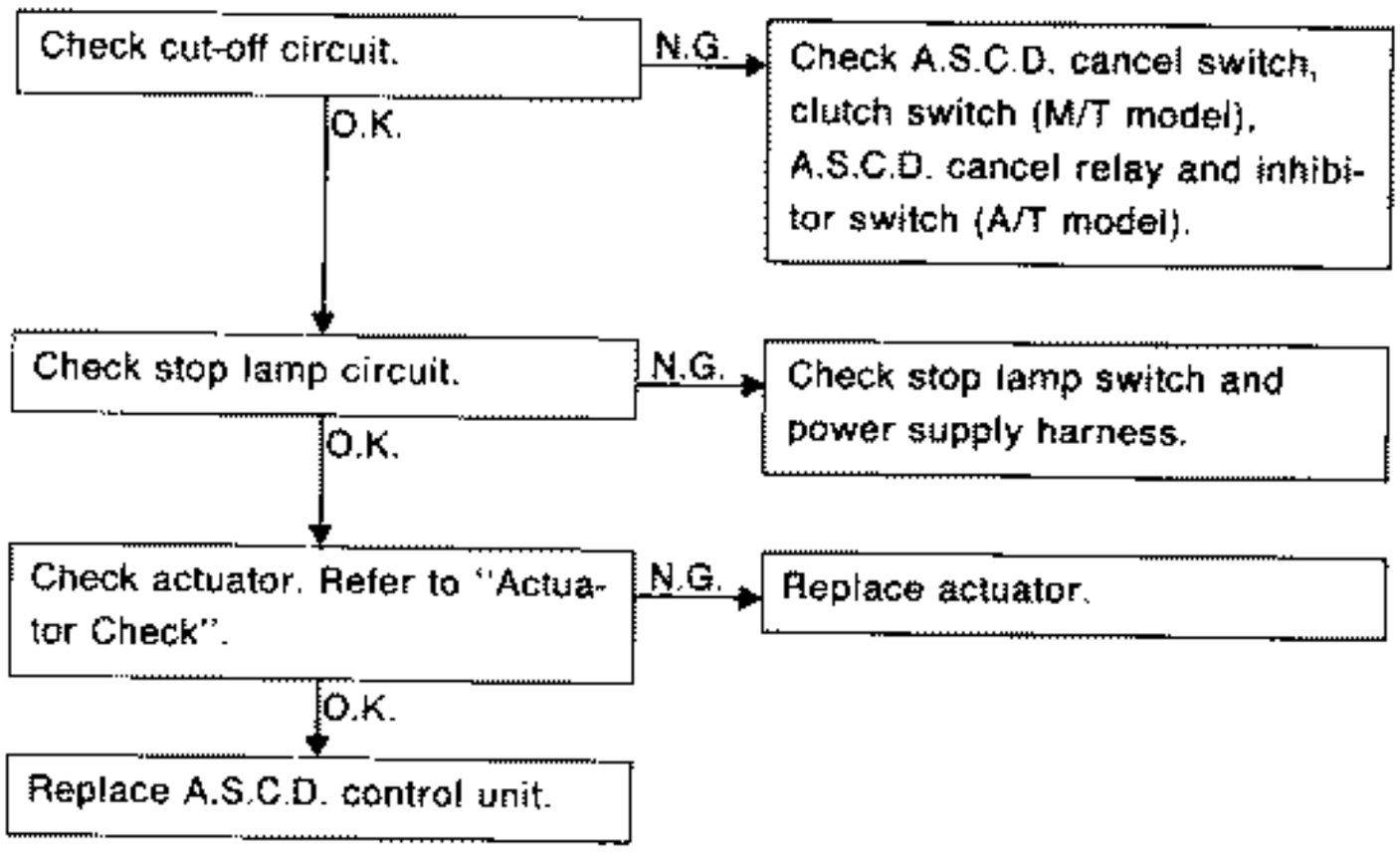

O.D. CANCEL CIRCUIT CHECK FOR A.S.C.D. CONTROL UNIT

1. Turn O.D. control switch to "ON"
2. Measure voltage across ⑫ and ③.

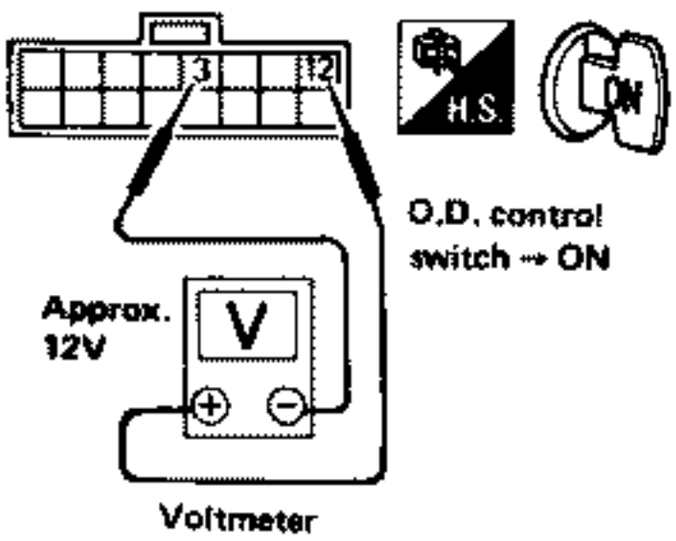

SEL640M

DIAGNOSTIC PROCEDURE-7

A/T model only:

- **When A.S.C.D. is set while vehicle is operating in "O.D." range,O.D. will be canceled and shifting to O.D. cannot be made thereafter.**
- **O.D. will not be canceled even if actual vehicle speed is 6 km/h (4 MPH) lower than set speed. (Set speed cannot be maintained.)**
- **O.D. will not be canceled even if accelerator switch is turned "ON".**

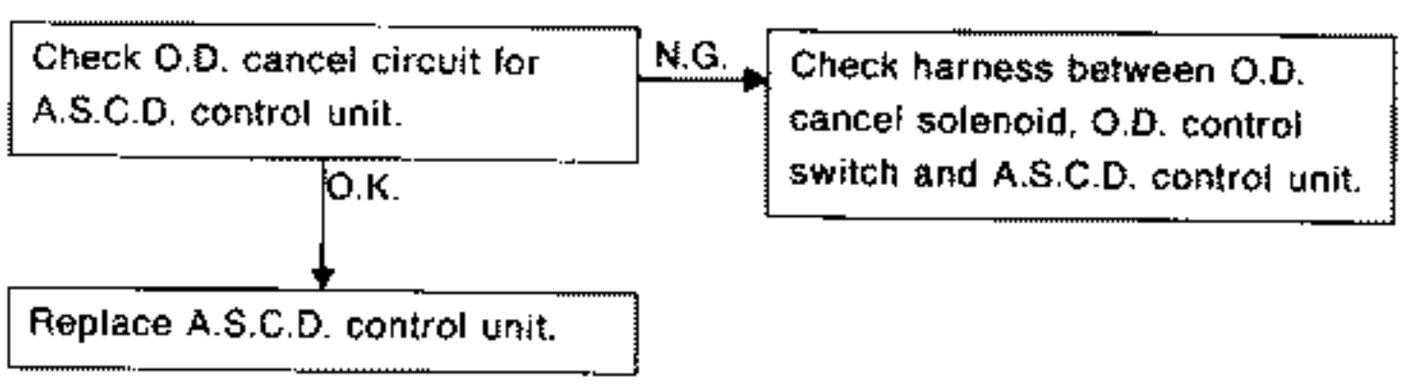

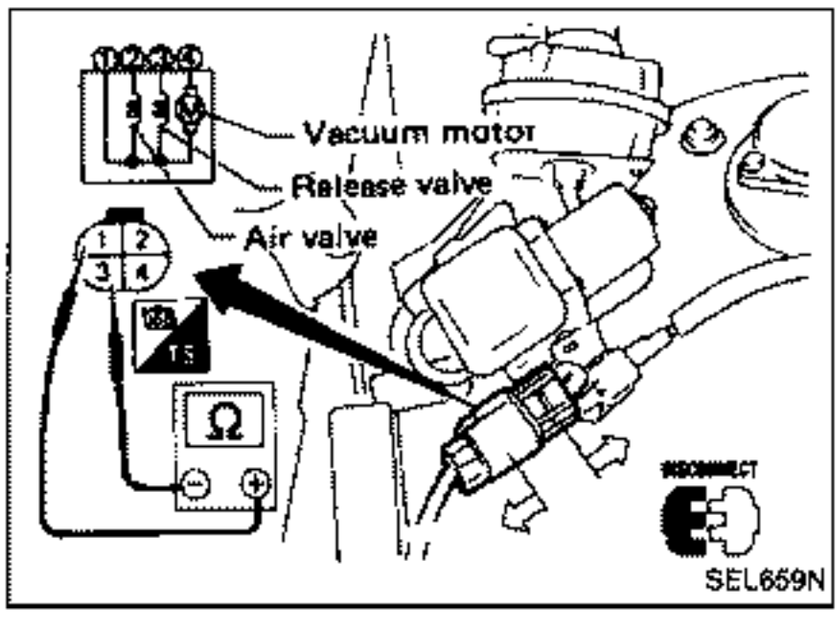

Actuator Check

1. Disconnect connector of actuator from main harness.
2. Check actuator operations as shown.

Check actuator.

O.K.

A

Check to see if motor starts when 12V D.C. is applied across ① and ④.

N.G. → Replace actuator.

O.K.

B

Check to see if A.S.C.D. wire is pulled when 12V D.C. is applied across ①, ②, ③ and ④.

N.G. → Replace actuator.

O.K. (Wire is pulled.)

C

Check to see if A.S.C.D. wire returns to original position 50 to 60 seconds after disconnecting lead from ④.

N.G. → Replace actuator.

O.K.(Wire does not return.)

D

Disconnect lead from ① to see if A.S.C.D. wire returns immediately.

N.G. → Replace actuator.

O.K. (Wire returns.)

Actuator is O.K.

A

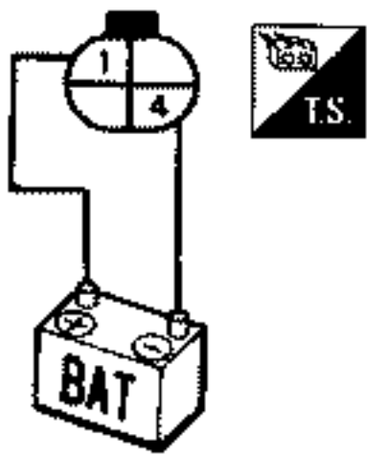

B

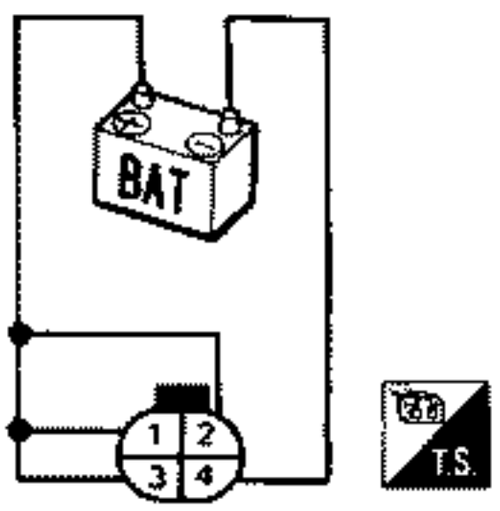

C

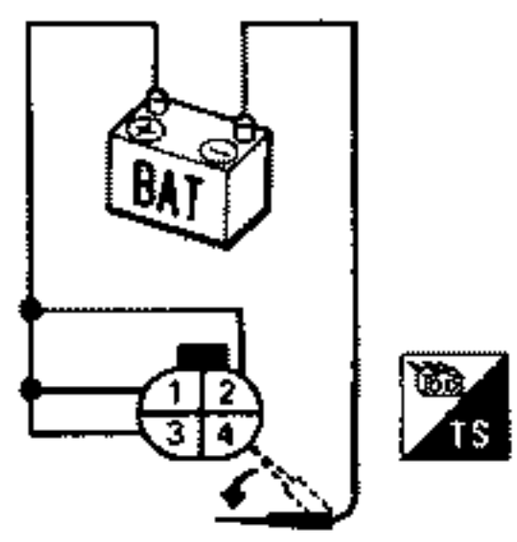

D

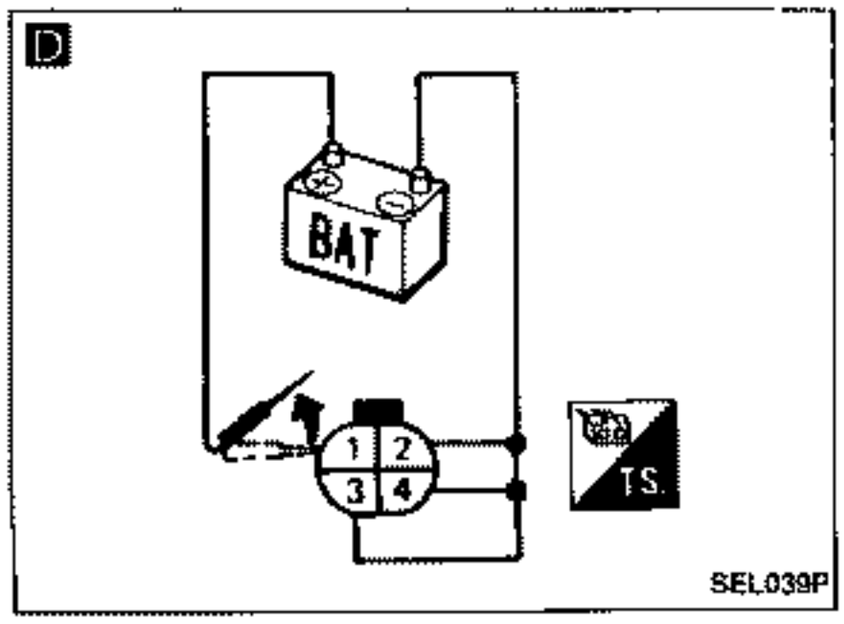

Engine Compartment

L.H. DRIVE MODELS

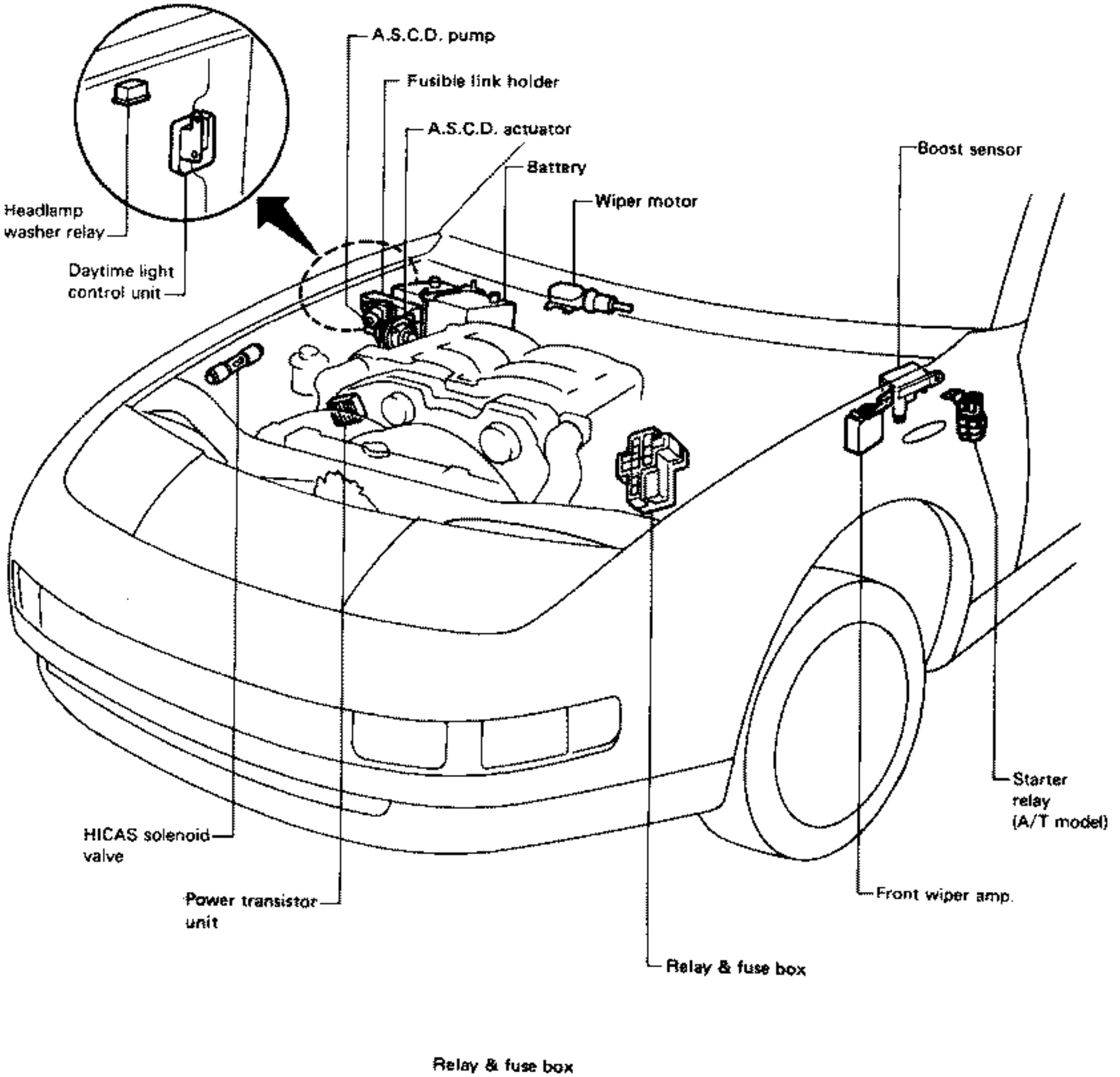

Relay & fuse box

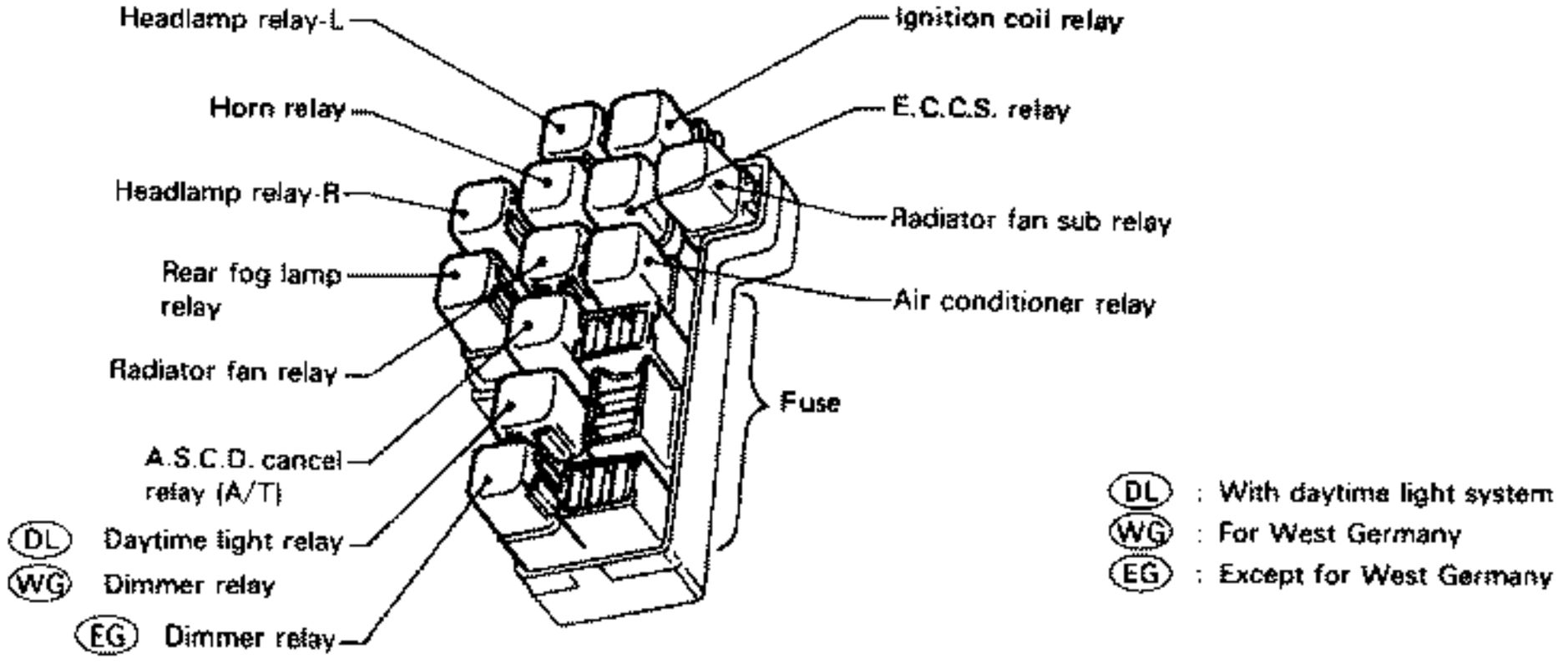

DL : With daytime light system
WG : For West Germany
EG : Except for West Germany

SEL385P

Engine Compartment (Cont'd)

R.H. DRIVE MODELS

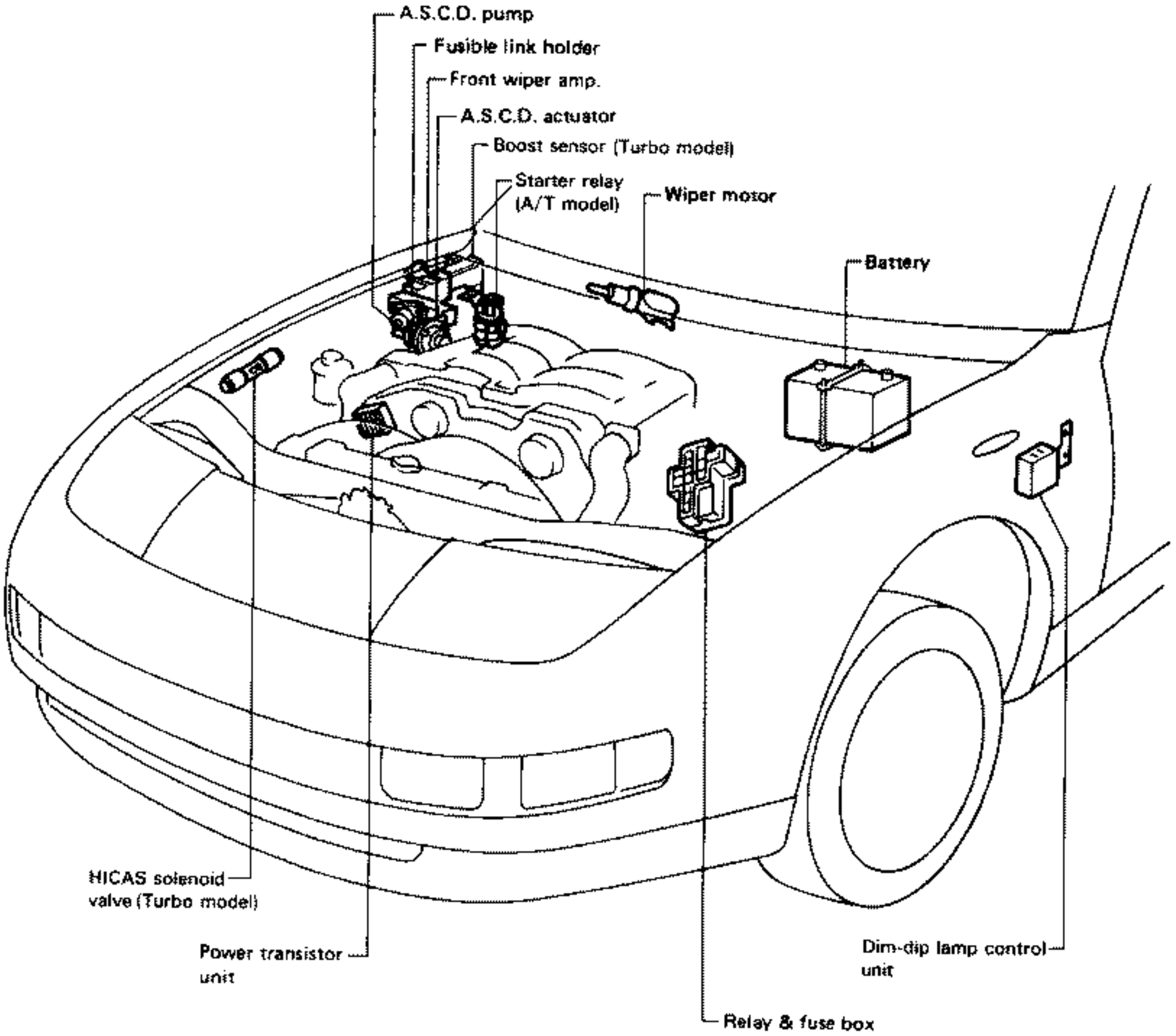

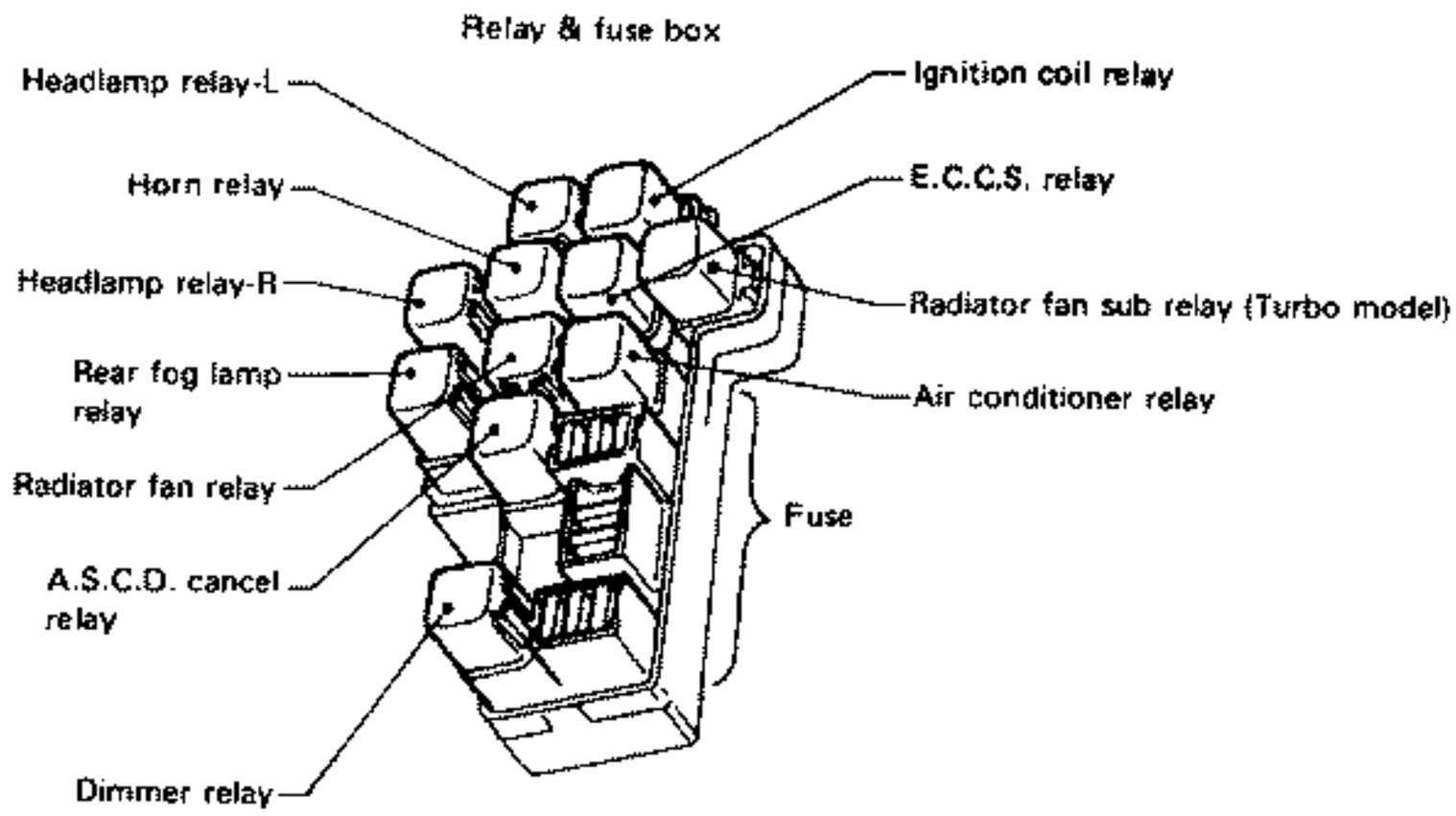

SEL386P

Passenger Compartment

L.H. DRIVE MODELS

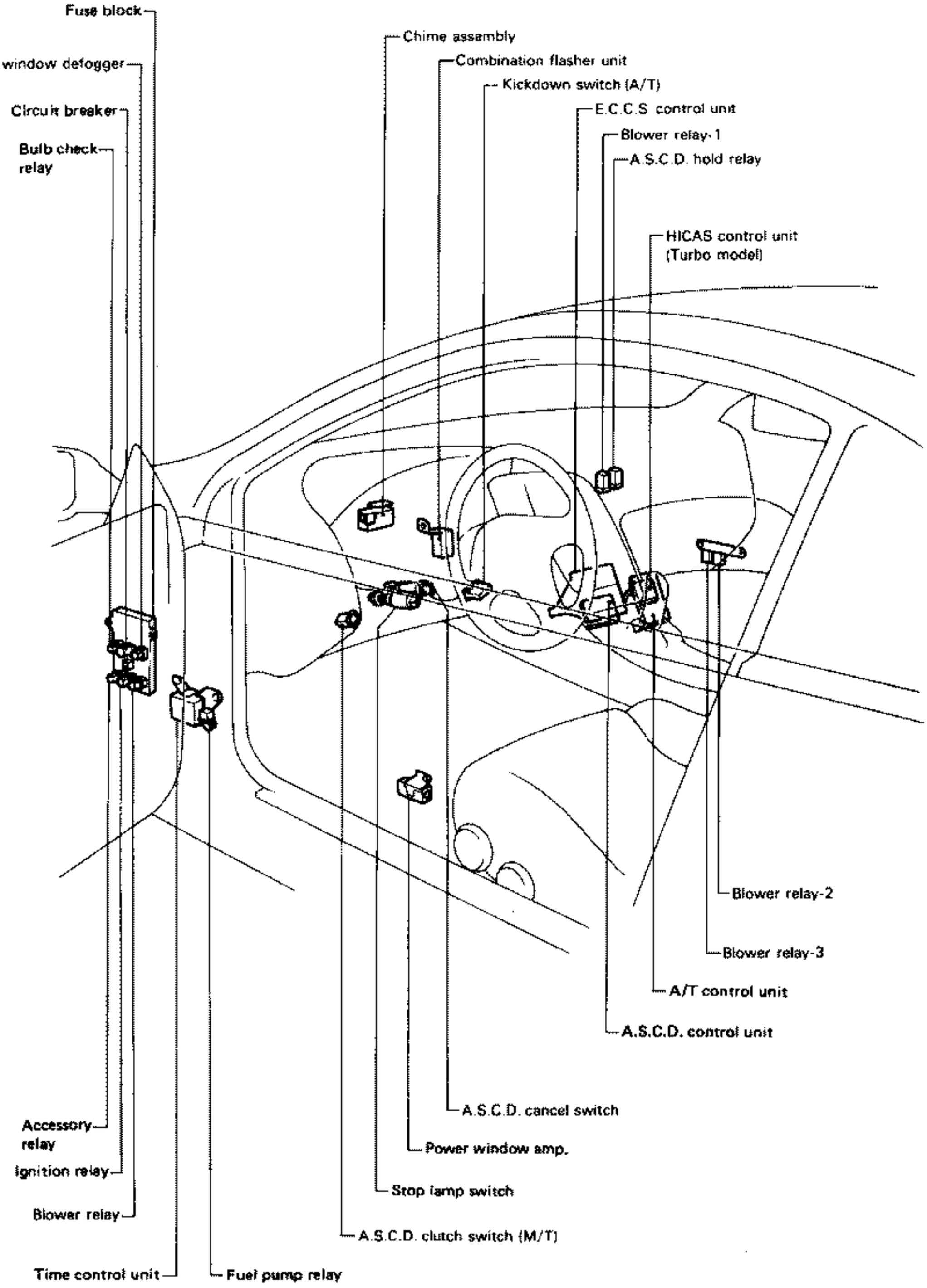

SEL387P

Passenger Compartment (Cont'd)

R.H. DRIVE MODELS

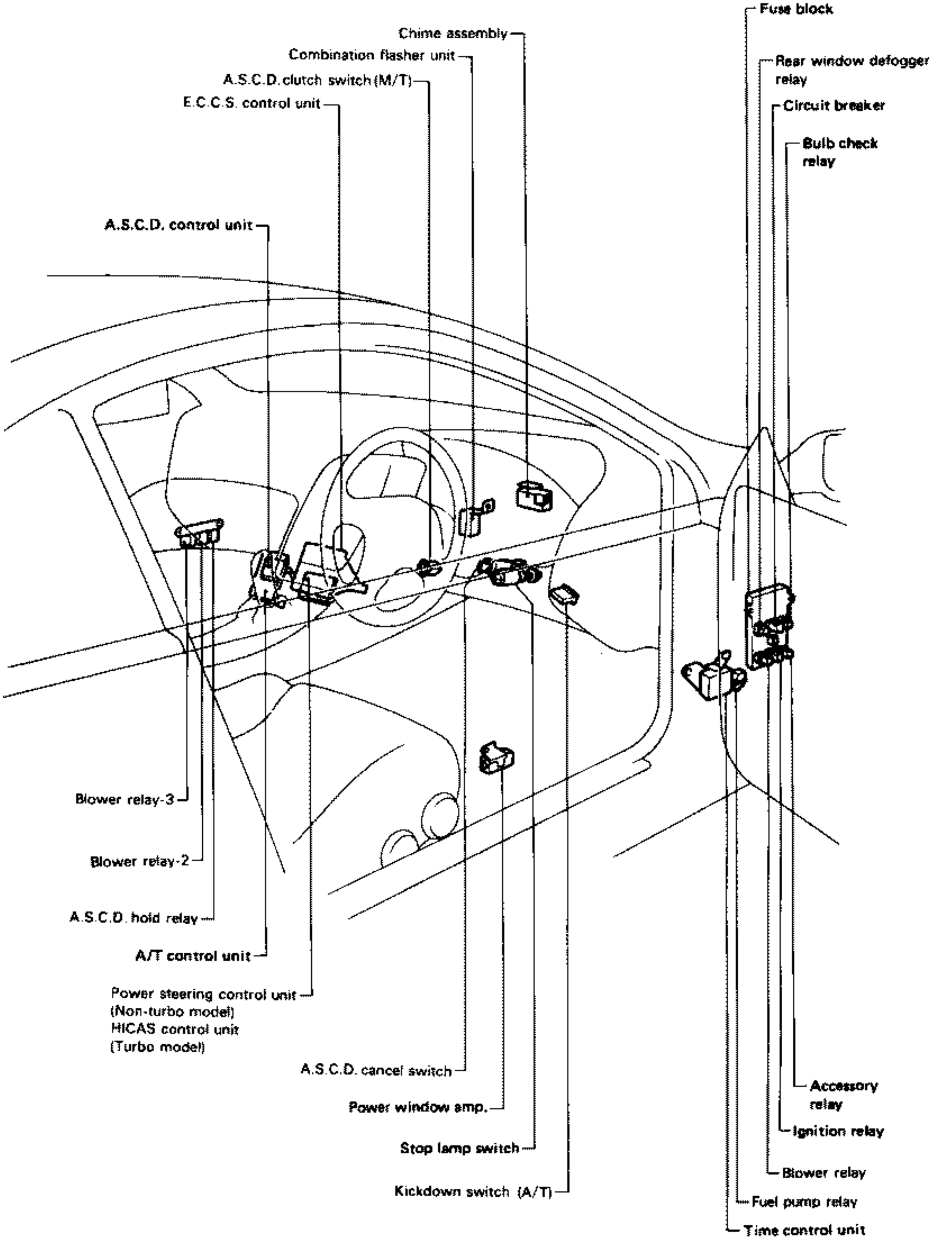

SEL388P

Luggage Compartment

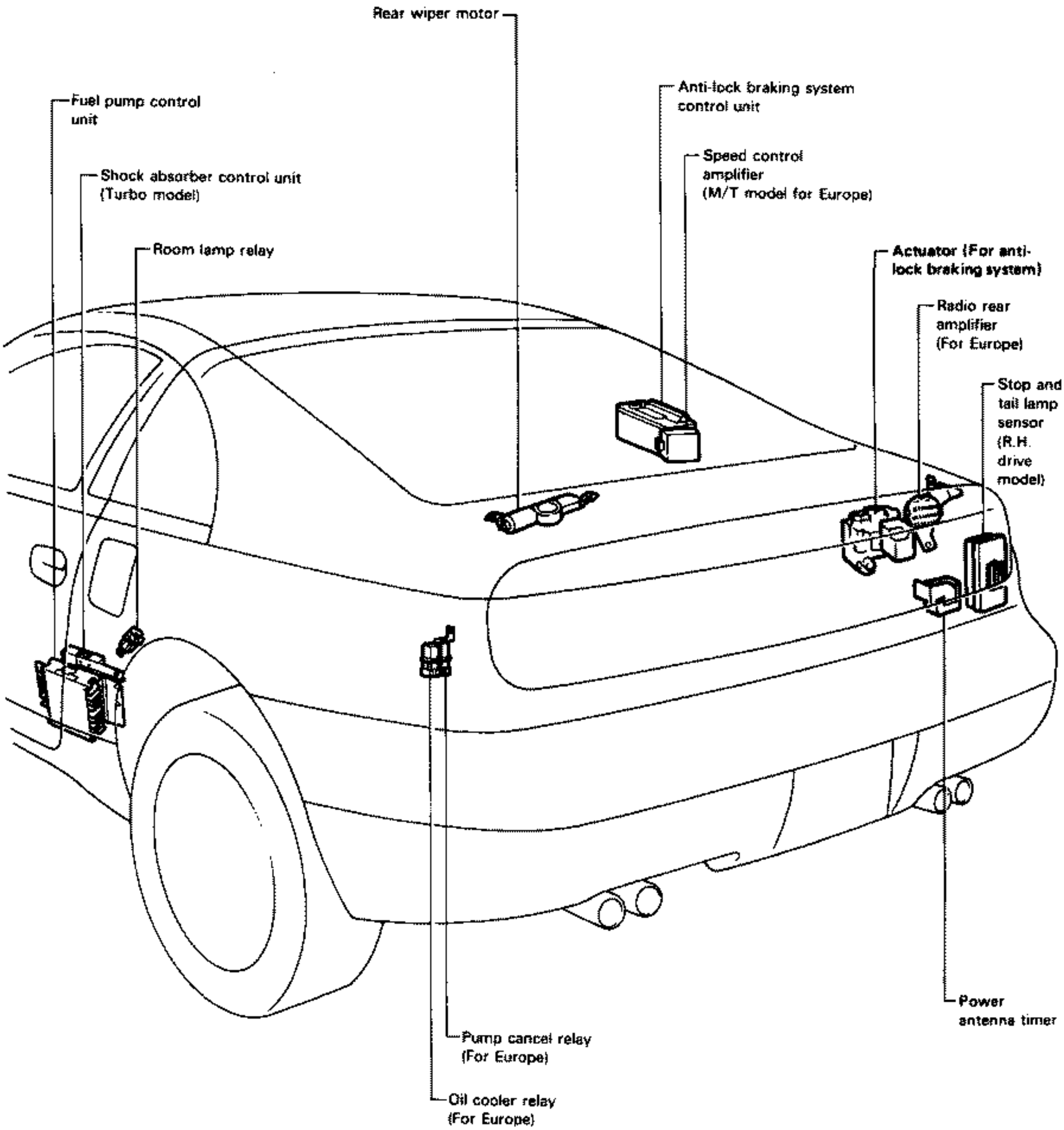

SEL389P

Outline

L.H. DRIVE MODELS

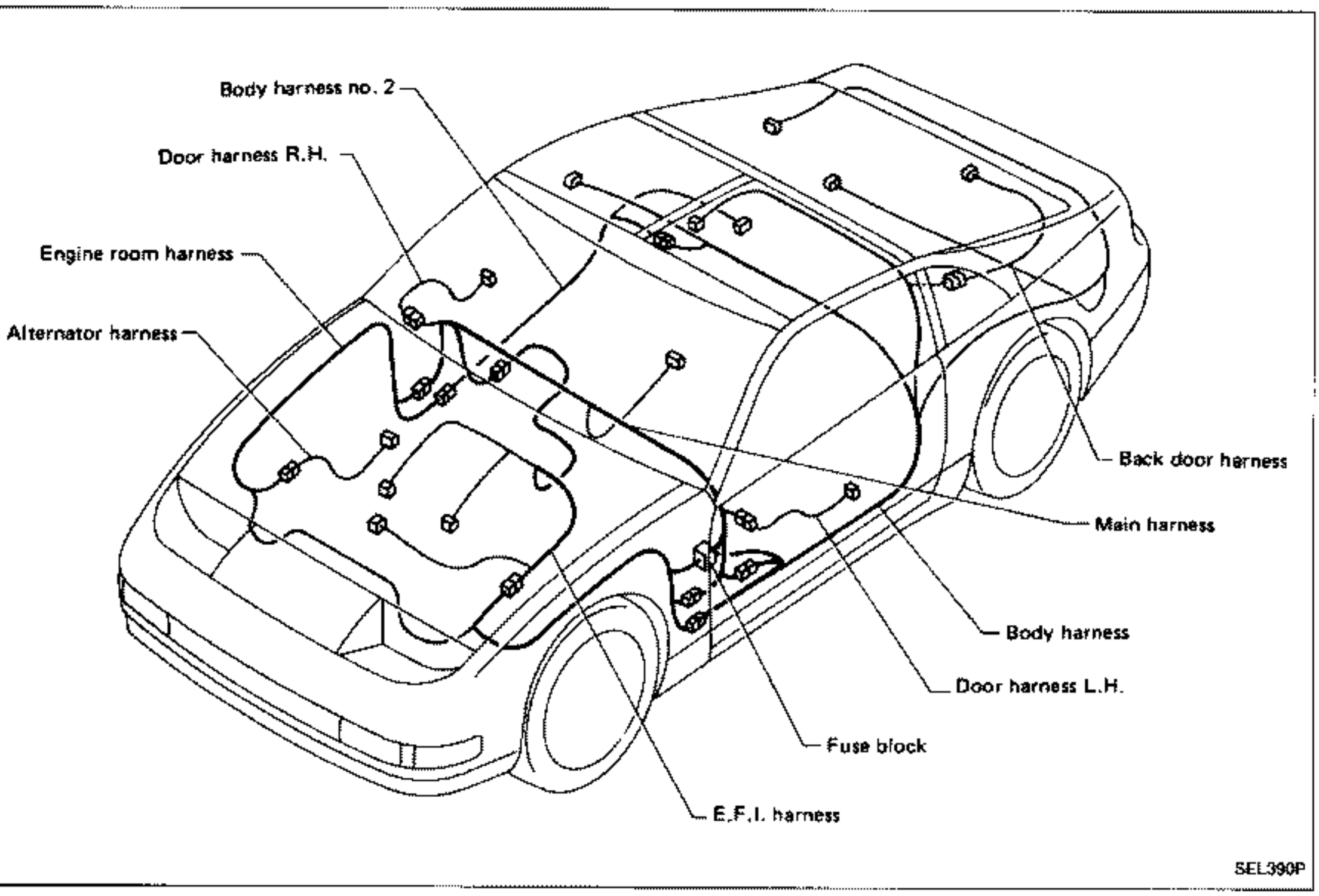

Outline (Cont'd)

R.H. DRIVE MODELS

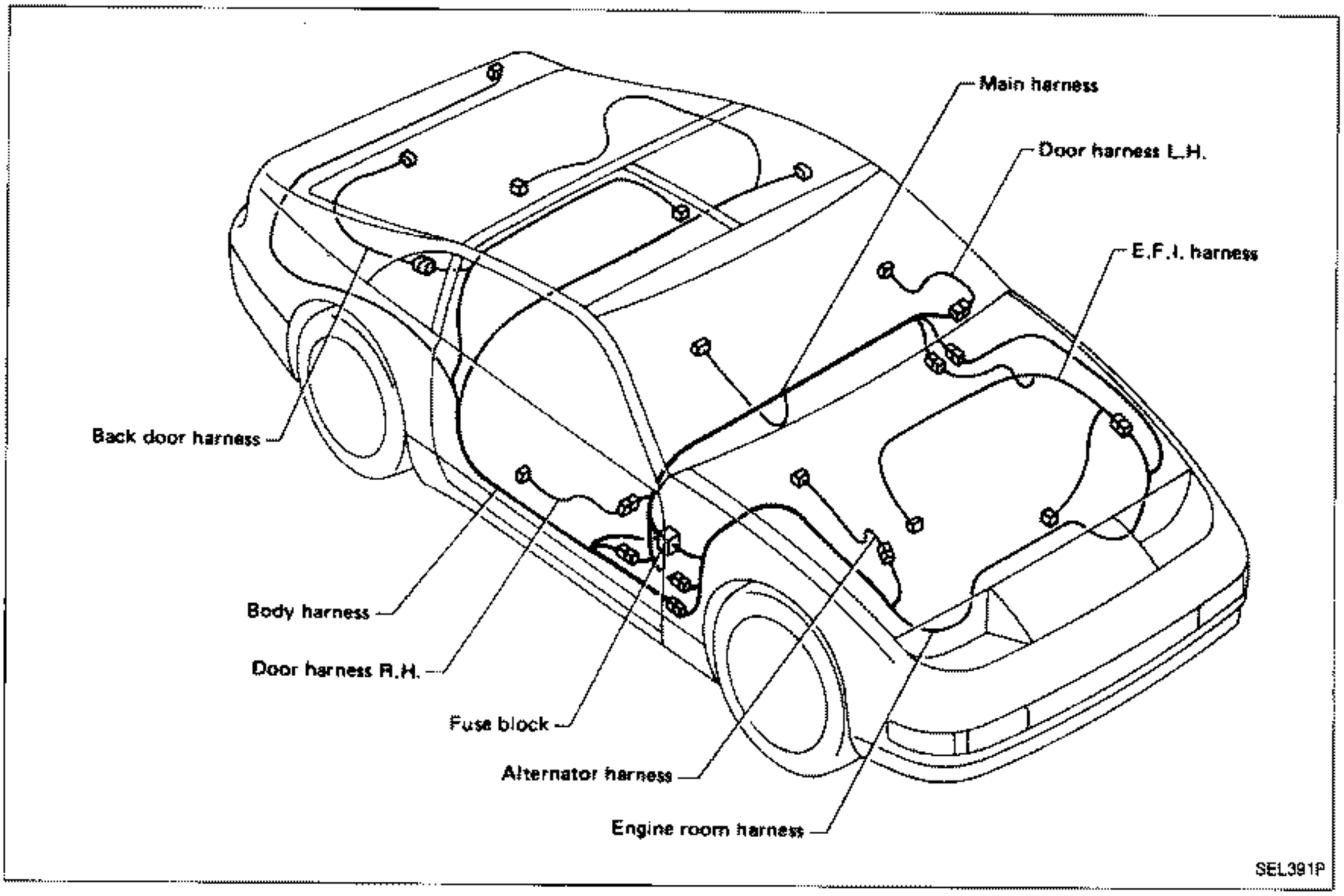

Main Harness

L.H. DRIVE MODELS

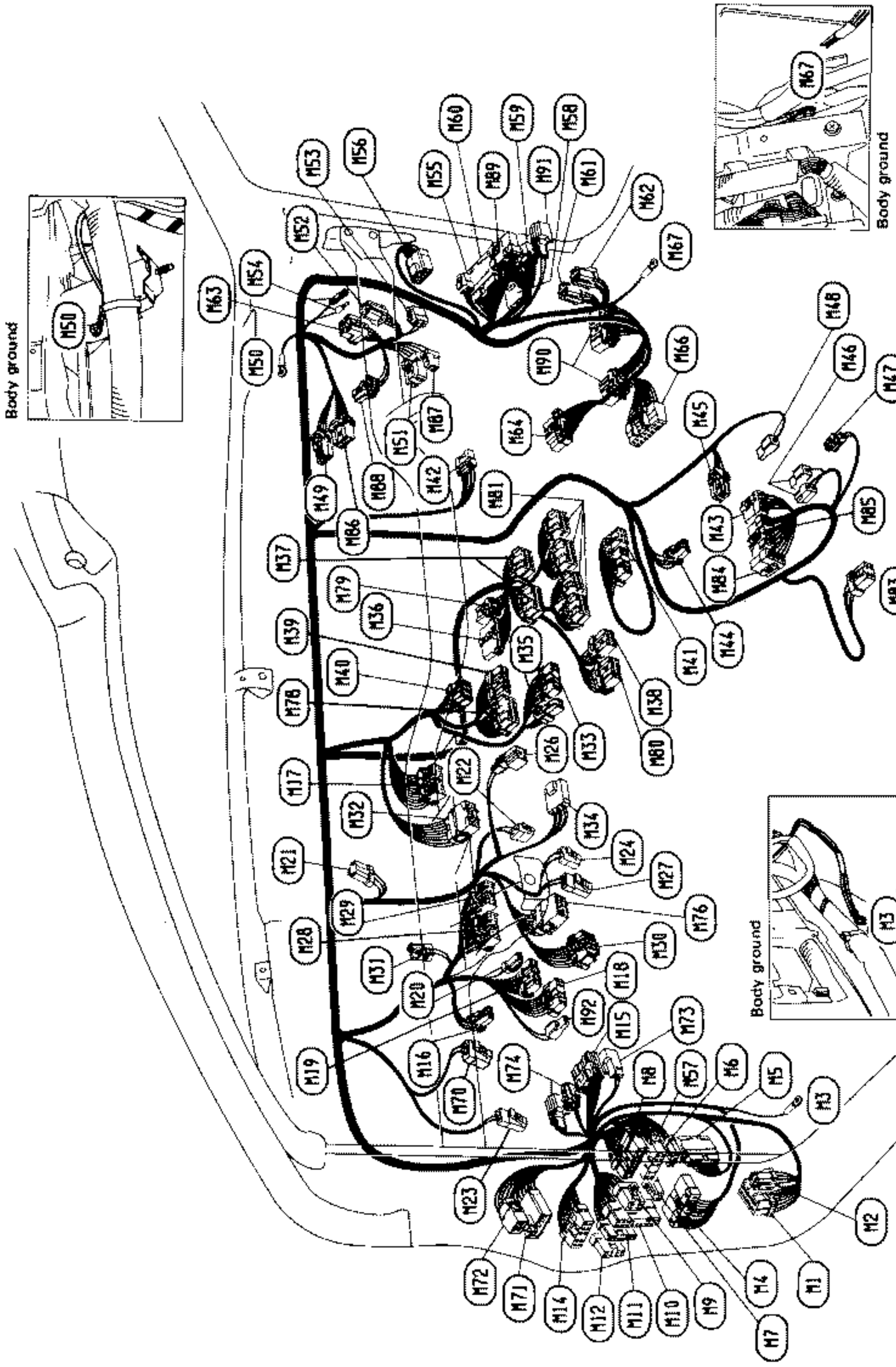

(M1) : Time control unit
(M2) : Fuel pump relay
(M3) : Body ground
(M4) : To body harness (B2)
(M5) : To body harness (B3)
(M6) : To engine room harness (E131)
(M7) : Fuse block
(M8) : To engine room harness (E163) (Black)
(M9) : Fuse block
(M10) : Fuse block
(M11) : Fuse block
(M12) : Fuse block
(M14) : Diode
(M15) : Check connector
(M16) : Warning lamp
(M17) : Combination meter
(M18) : Lighting switch·Headlamp washer switch
(M19) : Cluster switch
(M20) : Cluster switch
(M21) : Combination flasher unit
(M22) : Kickdown switch (White) (A/T model)
(M23) : A.S.C.D. clutch switch (Blue) (M/T model)
(M24) : Stop lamp switch (Black)
(M26) : Key hole illumination
(M27) : A.S.C.D. cancel switch (Blue)
(M28) : Combination meter (Black)
(M29) : Combination meter (White)
(M30) : Dimmer switch
(M31) : Warning chime
(M32) : Warning lamp
(M33) : Front wiper and washer switch
(M34) : Ignition switch
(M35) : Rear wiper and washer switch
(M36) : Mode door motor (Manual A/C model)
(M37) : A/C control unit (Manual A/C model)
(M38) : Air mix actuator (Manual A/C model)
(M39) : A/C switch unit (Manual A/C model)
(M40) : Hazard warning switch
(M41) : Radio and cassette player
(M42) : Thermo control amplifier (Manual A/C model)
(M43) : Door mirror control switch
(Without headlamp aiming control system)
(M44) : Digital clock
(M45) : O.D. control switch·A/T illumination (A/T model)
(M46) : Cigarette lighter
(M47) : Ashtray illumination
(M48) : Parking brake switch
(M49) : Intake door motor (Manual A/C model)
(M50) : Body ground
(M51) : Heater resistor (Manual A/C model)
(M52) : Blower relay-1 (Manual A/C model)
(M53) : Blower motor
(M54) : Glove box lamp
(M55) : Diode (M/T model)
(M56) : To door harness R.H. (D108)
(M57) : To engine room harness (E111)
(M58) : To engine room harness (E109)
(M59) : To engine room harness (E112) (Brown)
(M60) : To engine room harness (E110) (Black)
(M61) : Blower relay-3 (Manual A/C model)
(M62) : Blower relay-2 (Manual A/C model)
(M63) : A.S.C.D. hold relay
(M64) : To E.F.I. harness (F2)
(M66) : A.S.C.D. control unit
(M67) : Body ground
(M70) : Clutch switch (Black) (M/T model)
(M71) : To door harness L.H. (D1)
(M72) : To door harness L.H. (D7)
(M73) : Check connector
(M74) : Joint connector
(M76) : Steering angle sensor·Steering switch
(M78) : A/C switch unit (Auto A/C model)
(M79) : Mode door motor (Auto A/C model)
(M80) : To A/C sub-harness (Auto A/C model)
(M81) : A/C control unit (Auto A/C model)
(M83) : To seat sub-harness
(M84) : Headlamp aiming switch (For West Germany)
(M85) : Door mirror control switch
(With headlamp aiming control system)
(M86) : Intake door motor (Auto A/C model)
(M87) : Blower control amplifier (Auto A/C model)
(M88) : Def-duct sensor·To sunload sensor (Auto A/C model)
(M89) : Diode
(M90) : HICAS control unit
(M91) : To engine room harness (E113)
(M92) : Cluster switch (With daytime light system)

Diode (M14) (M55) (M89)

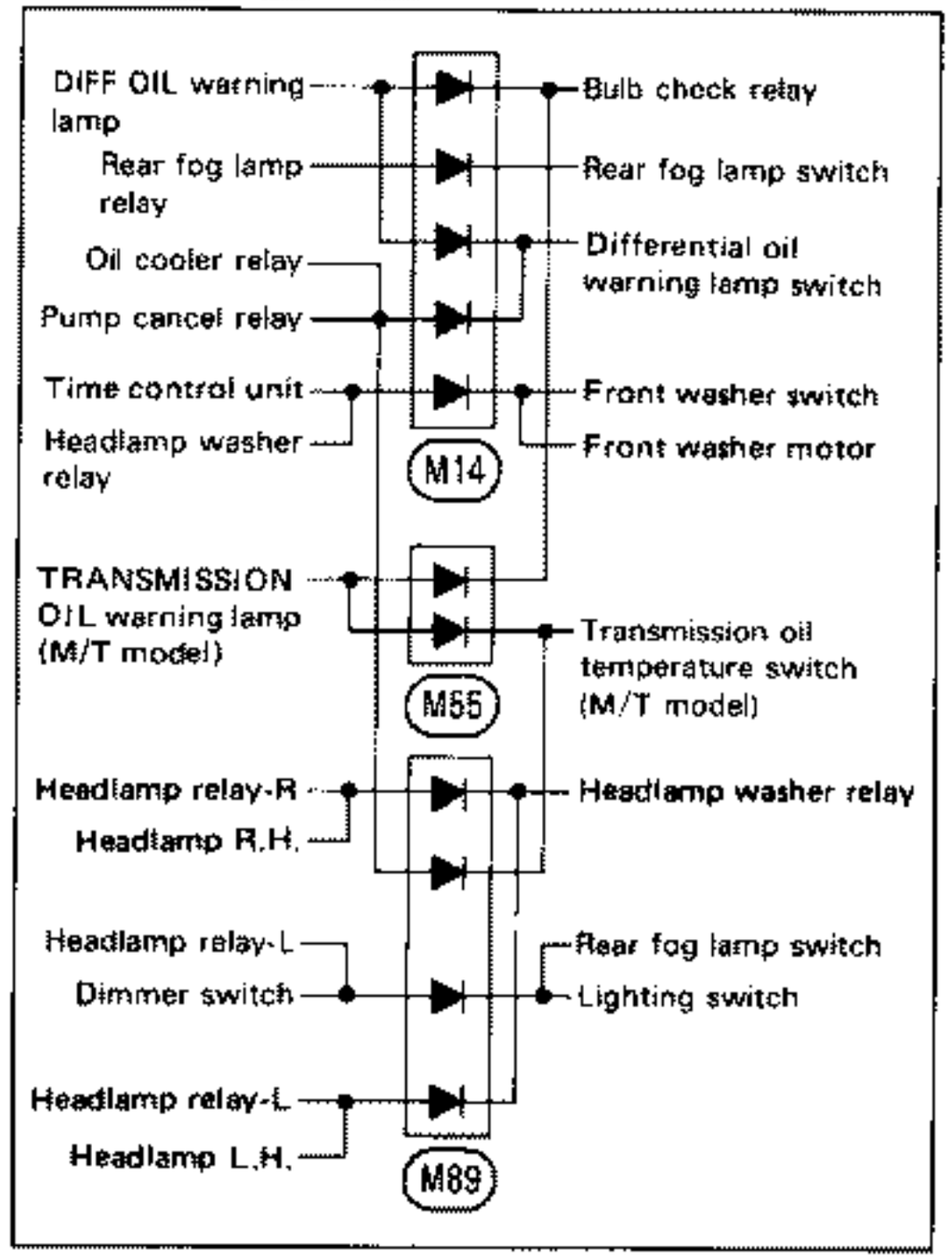

Main Harness (Cont'd)

R.H. DRIVE MODELS

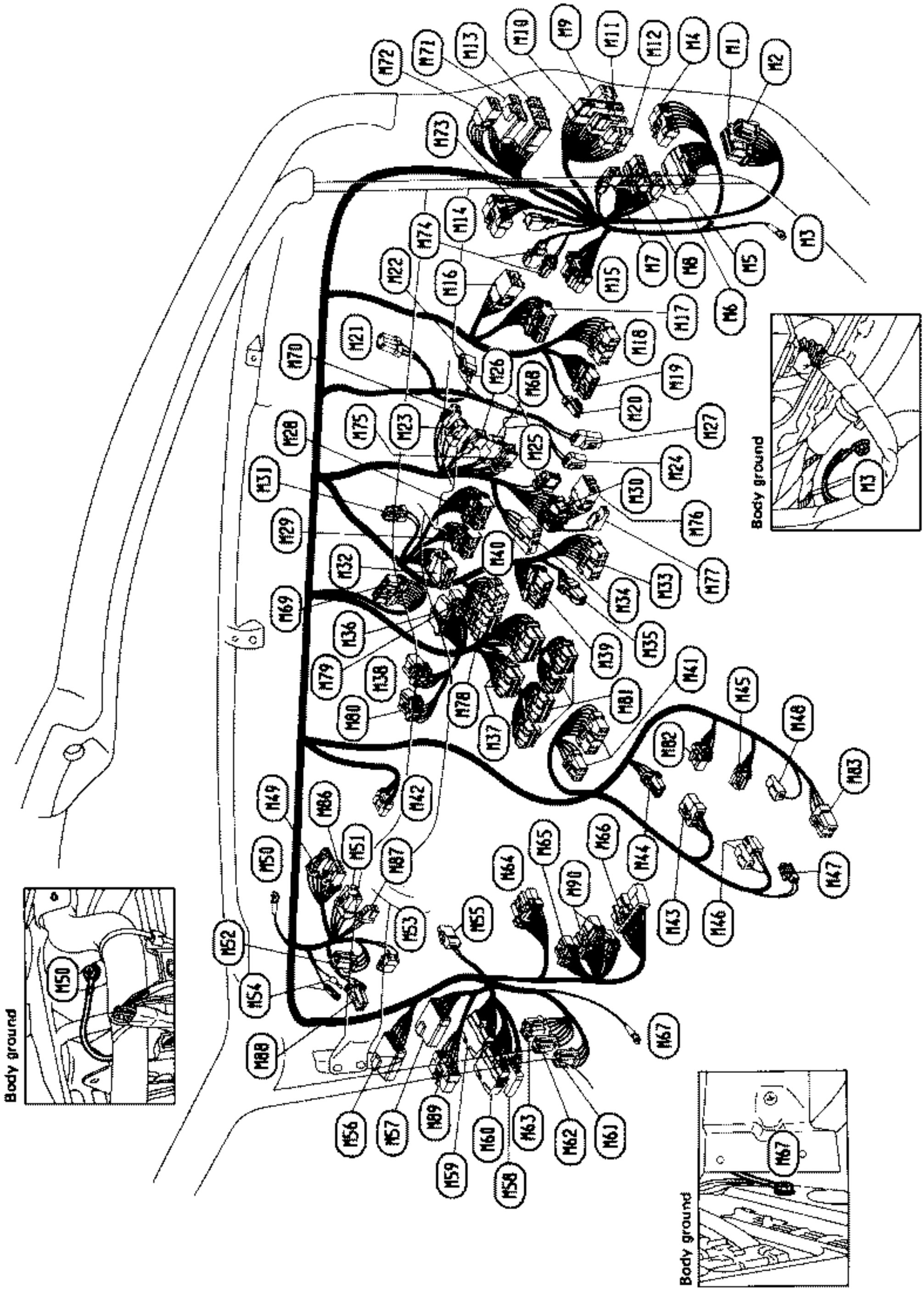

M1 : Time control unit
M2 : Fuel pump relay
M3 : Body ground
M4 : To body harness (B2)
M5 : To body harness (B3)
M6 : To engine room harness (E13L)
M7 : Joint connector (Non-turbo model)
M8 : To engine room harness (E103) (Black)
M9 : Fuse block
M10 : Fuse block
M11 : Fuse block
M12 : Fuse block
M13 : To door harness R.H. (D101) (For Australia)
M14 : Diode
M15 : Check connector
M16 : Warning lamp
M17 : Combination meter
M18 : Lighting switch·Headlamp washer switch
M19 : Cluster switch
M20 : Cluster switch
M21 : Combination flasher unit
M22 : Kickdown switch (White) (A/T model)
M23 : A.S.C.D. clutch switch (Blue) (M/T model)
M24 : Stop lamp switch (Black)
M25 : Steering switch (Non-turbo model)
M26 : Key hole illumination
M27 : A.S.C.D. cancel switch (Blue)
M28 : Combination meter (Black)
M29 : Combination meter (White)
M30 : Dimmer switch
M31 : Warning chime
M32 : Warning lamp
M33 : Front wiper and washer switch
M34 : Ignition switch
M35 : Rear wiper and washer switch
M36 : Mode door motor (Manual A/C model)
M37 : A/C control unit (Manual A/C model)
M38 : Air mix actuator (Manual A/C model)
M39 : A/C switch unit (Manual A/C model)
M40 : Hazard warning switch
M41 : Radio and cassette player
M42 : Thermo control amplifier (Manual A/C model)
M43 : Door mirror control switch
M44 : Digital clock
M45 : O.D. control switch·A/T illumination (A/T model)
M46 : Cigarette lighter
M47 : Ashtray illumination
M48 : Parking brake switch
M49 : Intake door motor (Manual A/C model)
M50 : Body ground
M51 : Heater resistor (Manual A/C model)
M52 : Blower relay-1 (Manual A/C model)
M53 : Blower motor
M54 : Glove box lamp
M55 : Diode
M56 : To door harness L.H. (D1)
M57 : To engine room harness (E11)
M58 : To engine room harness (E109)
M59 : To engine room harness (E112) (Brown)
M60 : To engine room harness (E110) (Black)
M61 : Blower relay-3 (Manual A/C model)
M62 : Blower relay-2 (Manual A/C model)
M63 : A.S.C.D. hold relay
M64 : To E.F.I. harness (F2)
M65 : Power steering control unit (Non-turbo model)
M66 : A.S.C.D. control unit
M67 : Body ground
M68 : Not used
M69 : Not used
M70 : Clutch switch (Black) (M/T model)
M71 : To door harness L.H. (D108) (For Europe)
M72 : To door harness L.H. (D109) (For Europe)
M73 : Check connector
M74 : Joint connector (Turbo model)
M75 : Not used
M76 : Steering angle sensor·Steering switch (Turbo model)
M77 : Not used
M78 : A/C switch unit (Auto A/C model)
M79 : Mode door motor (Auto A/C model)
M80 : To A/C sub-harness (Auto A/C model)
M81 : A/C control unit (Auto A/C model)
M82 : Not used
M83 : To seat sub-harness (For Europe)
M86 : Intake door motor (Auto A/C model)
M87 : Blower control amplifier (Auto A/C model)
M88 : Def. duct sensor·To sunload sensor (Auto A/C model)
M89 : Diode
M90 : HICAS control unit (Turbo model)

Diode (M14) (M55) (M89)

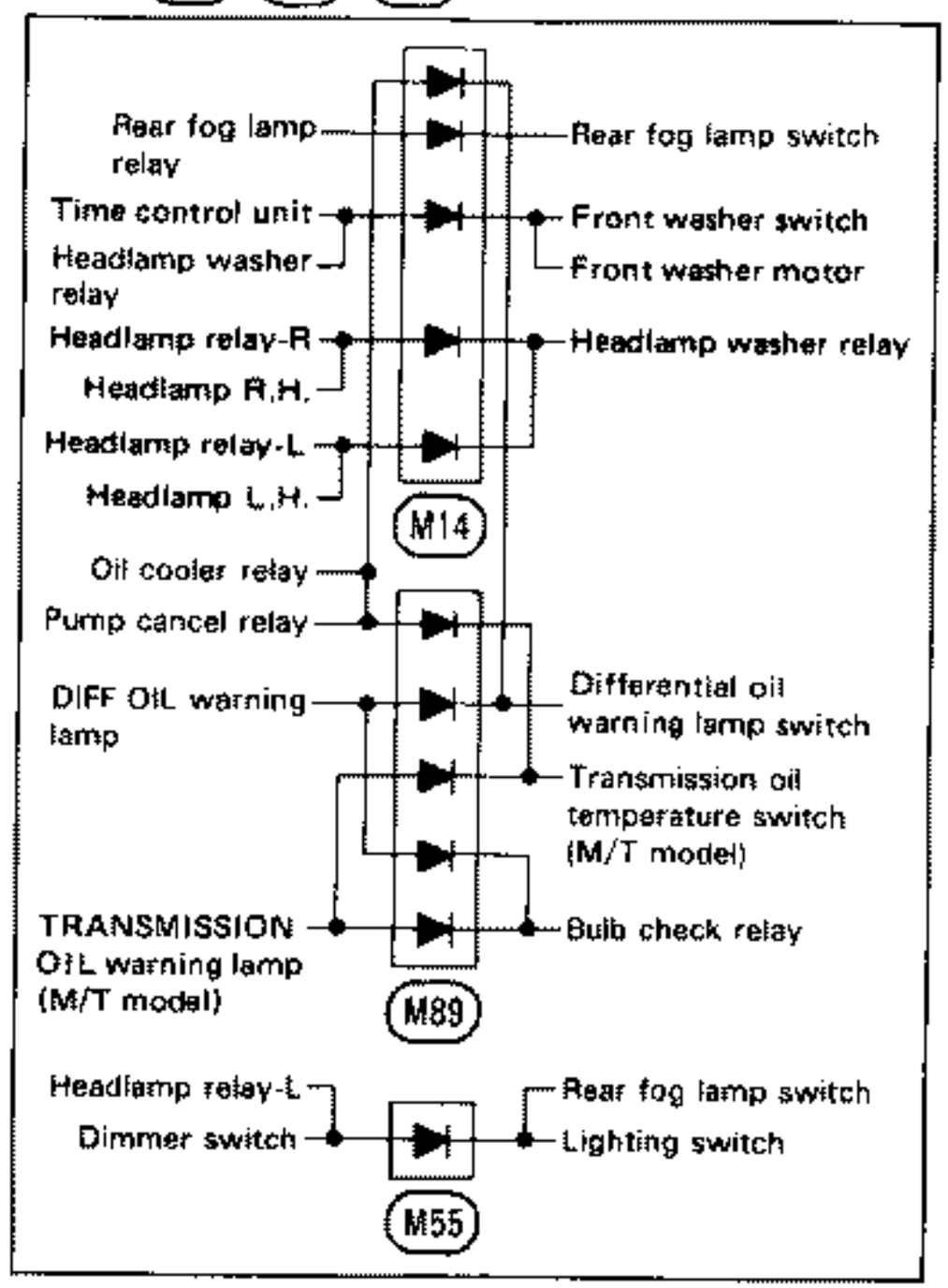

Body Harness

L.H. DRIVE MODELS

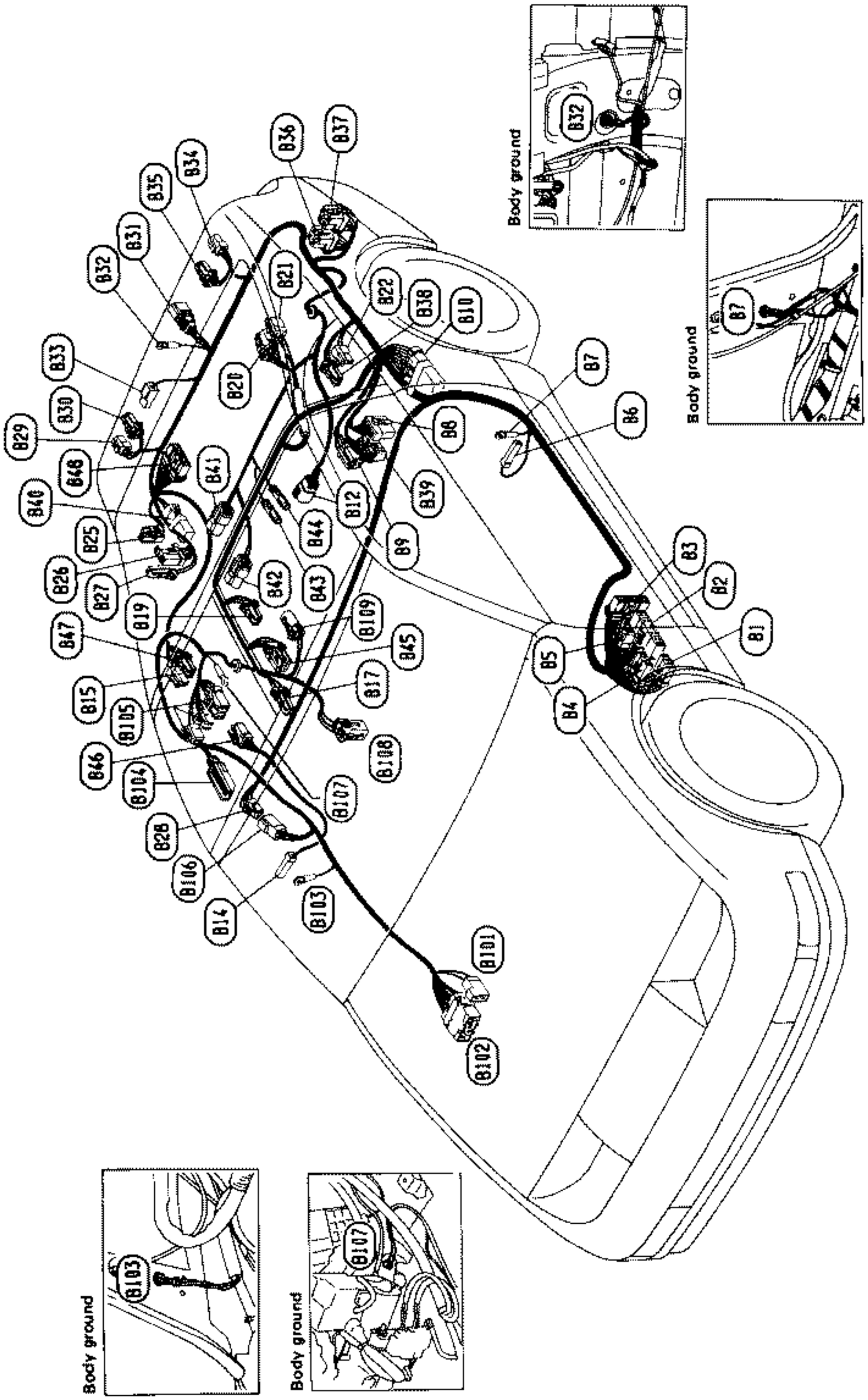

Body harness

(B1) : To engine room harness (E184)
(B2) : To main harness (H4)
(B3) : To main harness (H5)
(B4) : Fuse block
(B5) : Fuse block
(B6) : Door switch (Driver side)
(B7) : Body ground
(B8) : Fuel pump control unit
(B9) : Room lamp relay
(B10) : Diode
(B12) : Fuel tank gauge unit
(B14) : Door switch (Passenger side)
(B15) : Rear speaker R.H.
(B17) : Spot lamp
(B19) : Interior lamp
(B20) : To back door harness (D201)
(B21) : To back door harness (D202)
(B22) : Rear speaker L.H.
(B25) : Luggage room lamp
(B26) : Power antenna timer
(B27) : Power antenna motor
(B28) : To body harness no. 2 (B146)
(B29) : Rear combination lamp R.H.
(B30) : Back-up lamp R.H.
(B31) : License lamp•To rear fog lamp sub-harness
(B32) : Body ground
(B33) : Back door switch
(B34) : Rear combination lamp L.H.
(B35) : Back-up lamp L.H.
(B36) : Pump cancel relay (Black)
(B37) : Oil cooler relay (Brown)
(B38) : Shock absorber actuator L.H.
(B39) : Shock absorber control unit
(B40) : Diode
(B41) : Differential oil pump
(B42) : Transmission oil pump (M/T model)
(B43) : Differential oil temperature switch
(B44) : Differential oil warning lamp switch
(B45) : In-vehicle sensor upper•Aspirator motor (Auto A/C model)
(B46) : Speed control amplifier (M/T model)
(B47) : Shock absorber actuator R.H.
(B48) : Radio rear amplifier

Body harness no. 2

(B101) : To engine room harness (E188)
(B102) : To engine room harness (E184)
(B103) : Body ground
(B104) : Anti-lock braking system control unit
(B105) : Actuator (For anti-lock braking system)
(B106) : To body harness (B28)
(B107) : Body ground
(B108) : Rear sensor (For anti-lock braking system)
(B109) : HICAS fail-safe solenoid valve

Diode (B10) (B40)

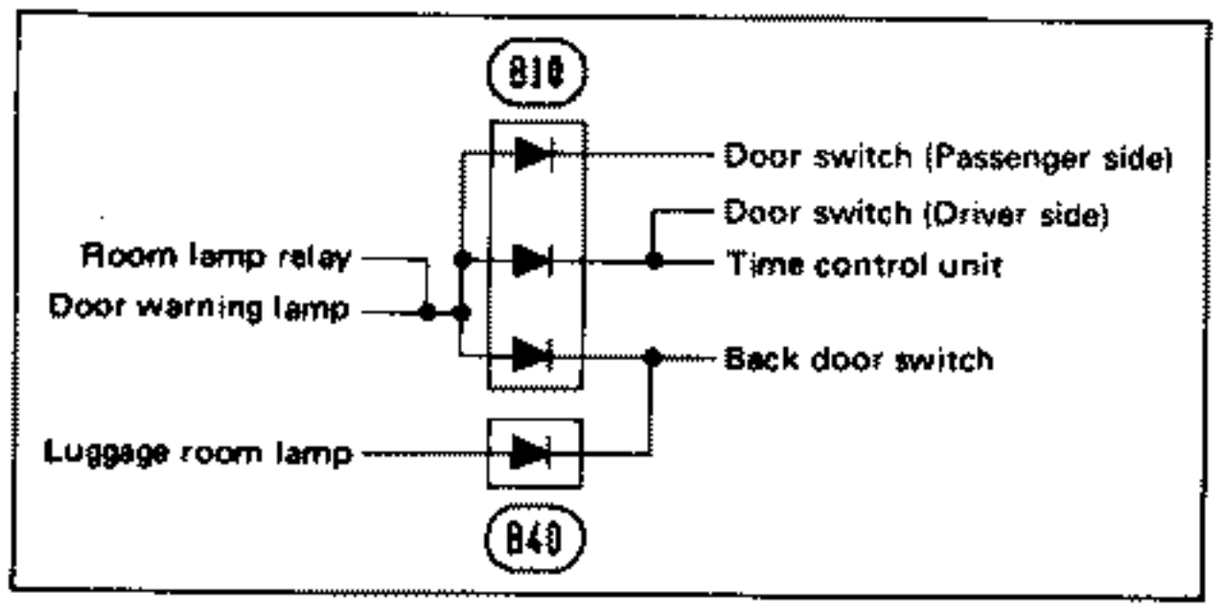

SEL394P

Body Harness (Cont'd)

R.H. DRIVE MODELS

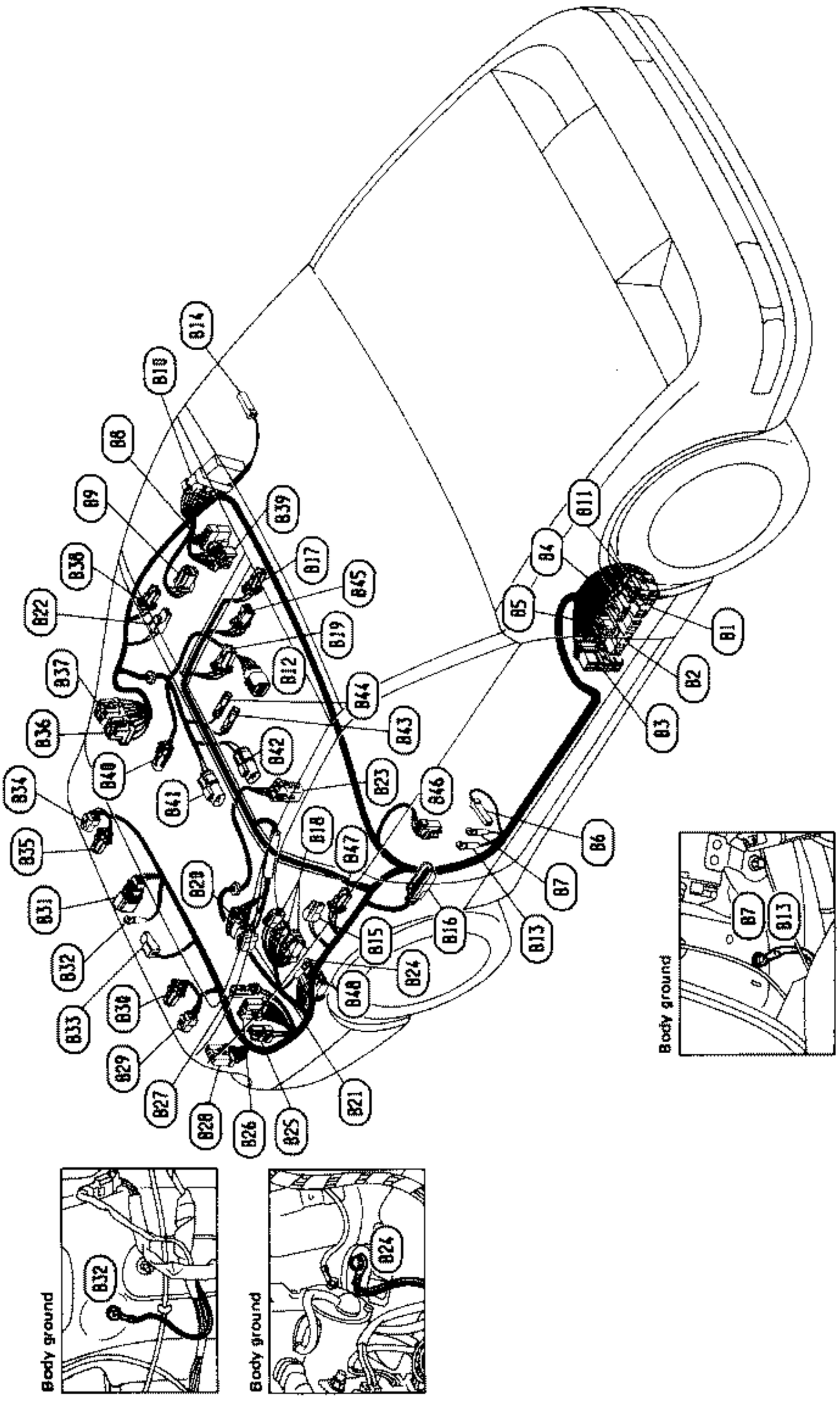

(B1) : To engine room harness (E184)
(B2) : To main harness (H4)
(B3) : To main harness (H5)
(B4) : Fuse block
(B5) : Fuse block
(B6) : Door switch (Driver side)
(B7) : Body ground
(B8) : Fuel pump control unit
(B9) : Room lamp relay
(B10) : Diode
(B11) : To engine room harness (E182)
(B12) : Fuel tank gauge unit
(B13) : Body ground
(B14) : Door switch (Passenger side)
(B15) : Rear speaker R.H.
(B16) : Anti-lock braking system control unit
(B17) : Spot lamp
(B18) : Actuator (For anti-lock braking system)
(B19) : Interior lamp
(B20) : To back door harness (B201)
(B21) : To back door harness (B202)
(B22) : Rear speaker L.H.
(B23) : Rear sensor (For anti-lock braking system)
(B24) : Body ground
(B25) : Luggage room lamp
(B26) : Power antenna timer
(B27) : Power antenna motor
(B28) : Stop and tail lamp sensor
(B29) : Rear combination lamp R.H.
(B30) : Back-up lamp R.H.
(B31) : License lamp·To rear fog lamp sub-harness
(B32) : Body ground
(B33) : Back door switch
(B34) : Rear combination lamp L.H.
(B35) : Back-up lamp L.H.
(B36) : Pump cancel relay (Black) (For Europe)
(B37) : Oil cooler relay (Brown) (For Europe)
(B38) : Shock absorber actuator L.H. (Turbo model)
(B39) : Shock absorber control unit (Turbo model)
(B40) : HICAS fail-safe solenoid valve (Turbo model)
(B41) : Differential oil pump (For Europe)
(B42) : Transmission oil pump (M/T model for Europe)
(B43) : Differential oil temperature switch (For Europe)
(B44) : Differential oil warning lamp switch (For Europe)
(B45) : In-vehicle sensor upper·Aspirator motor (Auto A/C model)
(B46) : Speed control amplifier (M/T model for Europe)
(B47) : Shock absorber actuator R.H. (Turbo model)
(B48) : Radio rear amplifier (For Europe)

Diode (B10)

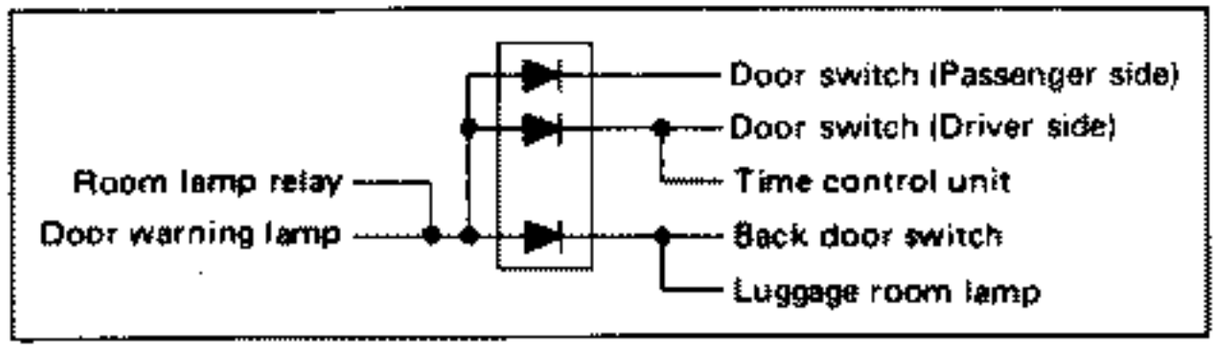

SEL395P

Engine Room Harness

L.H. DRIVE MODELS (Engine compartment)

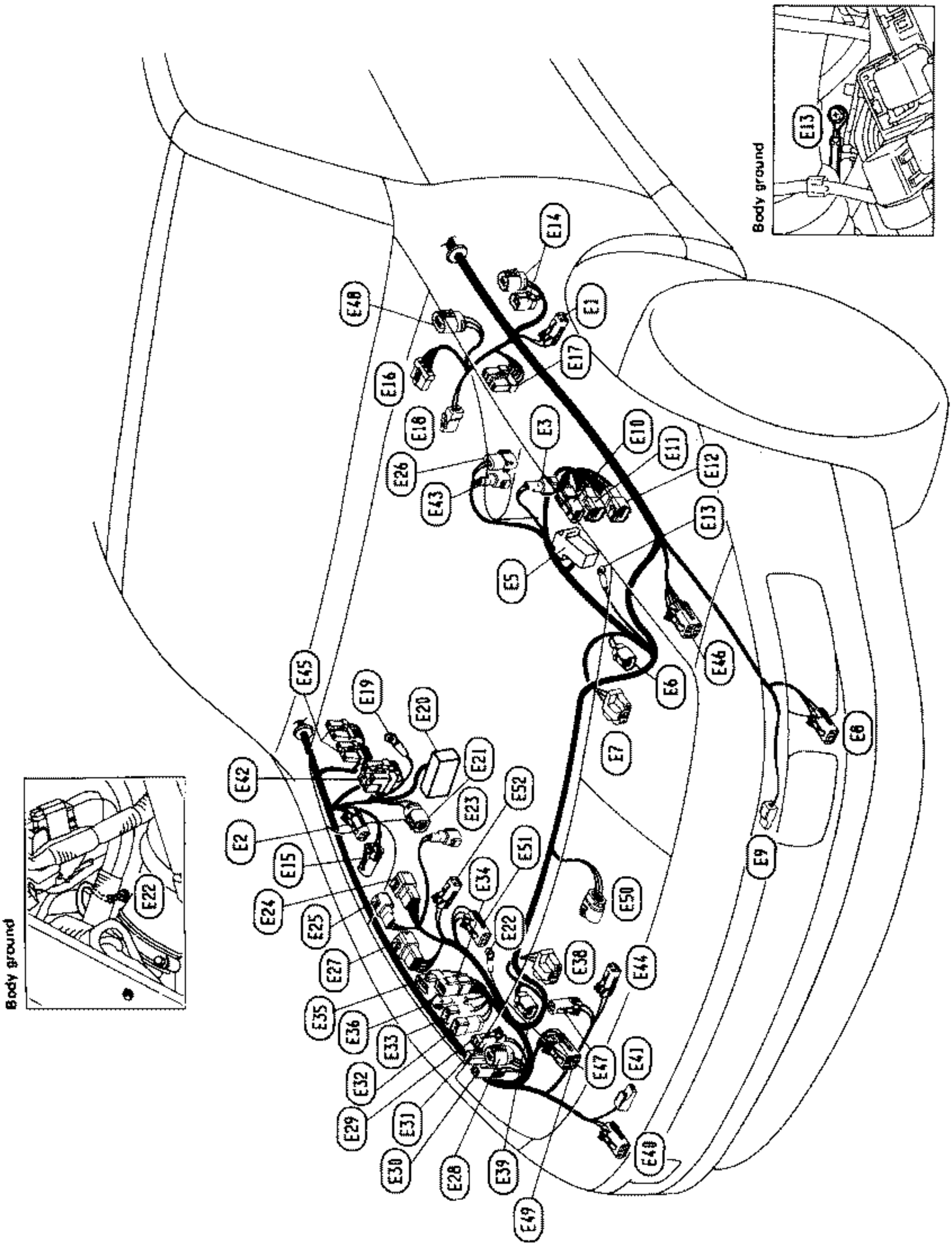

(E1) : Side turn signal lamp L.H.
(E2) : Dropping resistor (A/T model)
(E3) : Front sensor L.H. (For anti-lock braking system)
(E5) : Relay box (Refer to LOCATION OF ELECTRICAL UNITS.)
(E6) : Headlamp L.H. (Low beam)
(E7) : Headlamp L.H. (High beam)
(E8) : Front combination lamp L.H.
(E9) : Horn-low
(E10) : To E.F.I. harness (F23) (White)
(E11) : To E.F.I. harness (F24) (Gray)
(E12) : To E.F.I. harness (F25) (Brown)
(E13) : Body ground
(E14) : Starter relay (A/T model)
(E15) : Side turn signal lamp R.H.
(E16) : Front wiper motor
(E17) : Front wiper amplifier
(E18) : Brake fluid level switch
(E19) : Battery
(E20) : Fusible link holder
(E21) : A.S.C.D. actuator
(E22) : Body ground
(E23) : Front sensor R.H. (For anti-lock braking system)
(E24) : To A/T solenoid harness (A/T model)
(E25) : Revolution sensor (A/T model)
(E26) : Power steering oil pressure switch (Black)
(E27) : Inhibitor switch (A/T model)
(E28) : Front washer motor (White)
(E29) : Rear washer motor (Gray)
(E30) : Washer fluid level switch (Brown)
(E31) : Headlamp washer motor (Black)
(E32) : To alternator harness (A1) (Black)
(E33) : To alternator harness (A2) (Blue)
(E34) : To alternator harness (A3) (A/Tmodel)
(E35) : To alternator harness (A4) (M/T model)
(E36) : To alternator harness (A5)
(E38) : Headlamp R.H. (High beam)
(E39) : Headlamp R.H. (Low beam)
(E40) : Front combination lamp R.H.
(E41) : Horn-high
(E42) : Headlamp washer relay
(E43) : Power steering solenoid valve (Gray)
(E44) : Low-pressure switch
(E45) : Daytime light control unit
(E46) : Aiming motor unit L.H. (For West Germany)
(E47) : Ambient sensor (Auto A/C model)
(E48) : Boost sensor
(E49) : Aiming motor unit R.H. (For West Germany)
(E50) : Radiator fan motor
(E51) : HICAS solenoid valve
(E52) : HICAS oil level switch

Engine Room Harness (Cont'd)

R.H. DRIVE MODELS (Engine compartment)

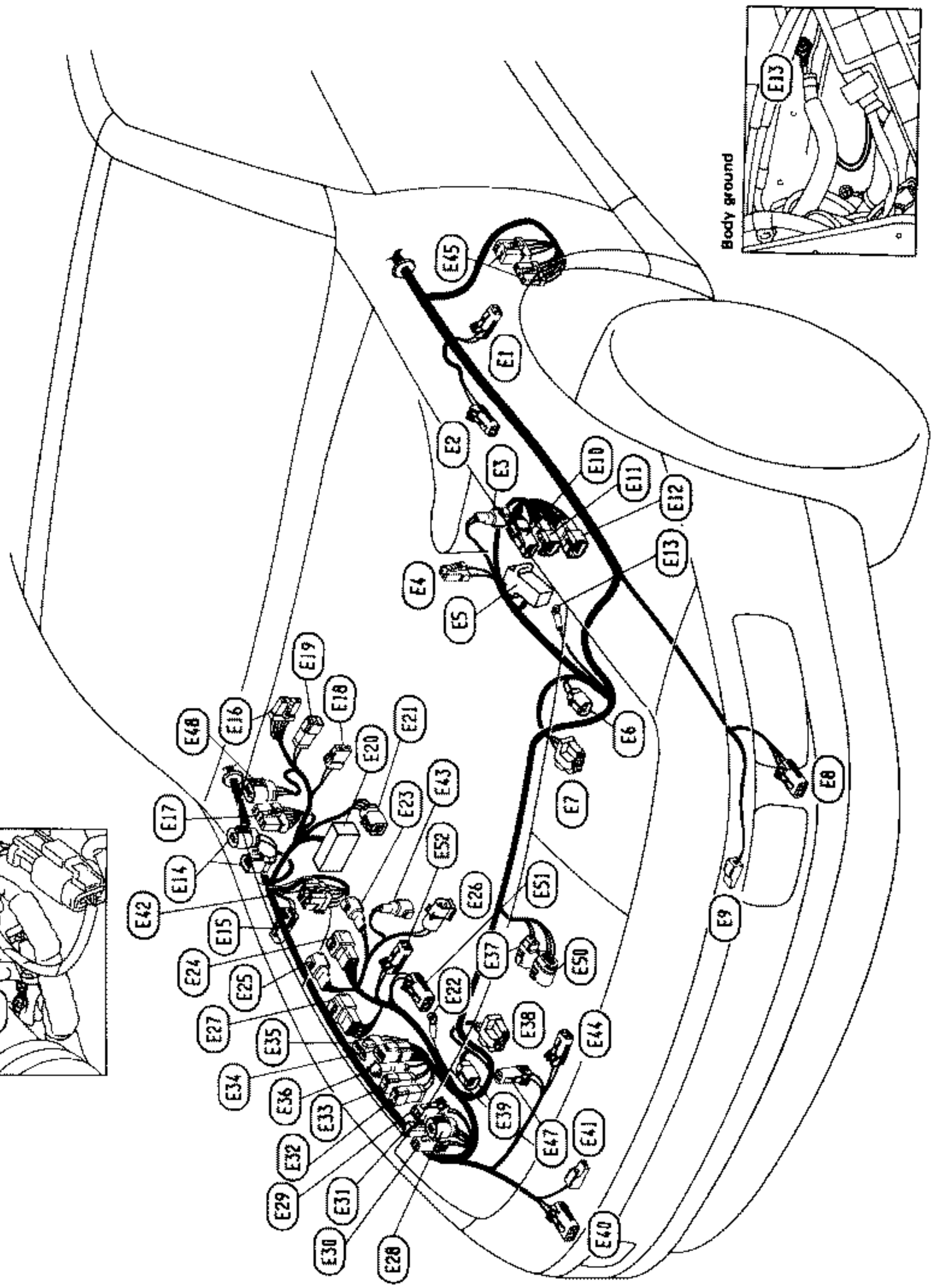

(E1) : Side turn signal lamp L.H.
(E2) : Dropping resistor (A/T model)
(E3) : Front sensor L.H. (For anti-lock braking system)
(E4) : Oil sending unit
(E5) : Relay box (Refer to LOCATION OF ELECTRICAL UNITS.)
(E6) : Headlamp L.H. (Low beam)
(E7) : Headlamp L.H. (High beam)
(E8) : Front combination lamp L.H.
(E9) : Horn-low
(E10) : To E.F.I. harness (F23) (White)
(E11) : To E.F.I. harness (F24) (Gray)
(E12) : To E.F.I. harness (F25) (Brown)
(E13) : Body ground
(E14) : Starter relay (A/T model)
(E15) : Side turn signal lamp R.H.
(E16) : Front wiper motor
(E17) : Front wiper amplifier
(E18) : Brake fluid level switch
(E19) : Battery
(E20) : Fusible link holder
(E21) : A.S.C.D. actuator
(E22) : Body ground
(E23) : Front sensor R.H. (For anti-lock braking system)
(E24) : To A/T solenoid harness (A/T model)
(E25) : Revolution sensor (A/T model)
(E26) : Power steering oil pressure switch (Black)
(E27) : Inhibitor switch (A/T model)
(E28) : Front washer motor (White)
(E29) : Rear washer motor (Gray)
(E30) : Washer fluid level switch (Brown)
(E31) : Headlamp washer motor (Black)
(E32) : To alternator harness (A1) (Black)
(E33) : To alternator harness (A2) (Blue)
(E34) : To alternator harness (A3) (A/Tmodel)
(E35) : To alternator harness (A4) (M/T model)
(E36) : To alternator harness (A5)
(E37) : Radiator fan motor (Non-turbo model)
(E38) : Headlamp R.H. (High beam)
(E39) : Headlamp R.H. (Low beam)
(E40) : Front combination lamp R.H.
(E41) : Horn-high
(E42) : Headlamp washer relay
(E43) : Power steering solenoid valve (Gray)
(E44) : Low-pressure switch
(E45) : Dim-dip lamp unit
(E47) : Ambient sensor (Auto A/C model)
(E48) : Boost sensor (Turbo model)
(E50) : Radiator fan motor (Turbo model)
(E51) : HICAS solenoid valve (Turbo model)
(E52) : HICAS oil level switch (Turbo model)

SEL397P

Engine Room Harness (Cont'd)

L.H. DRIVE MODELS (Passenger compartment)

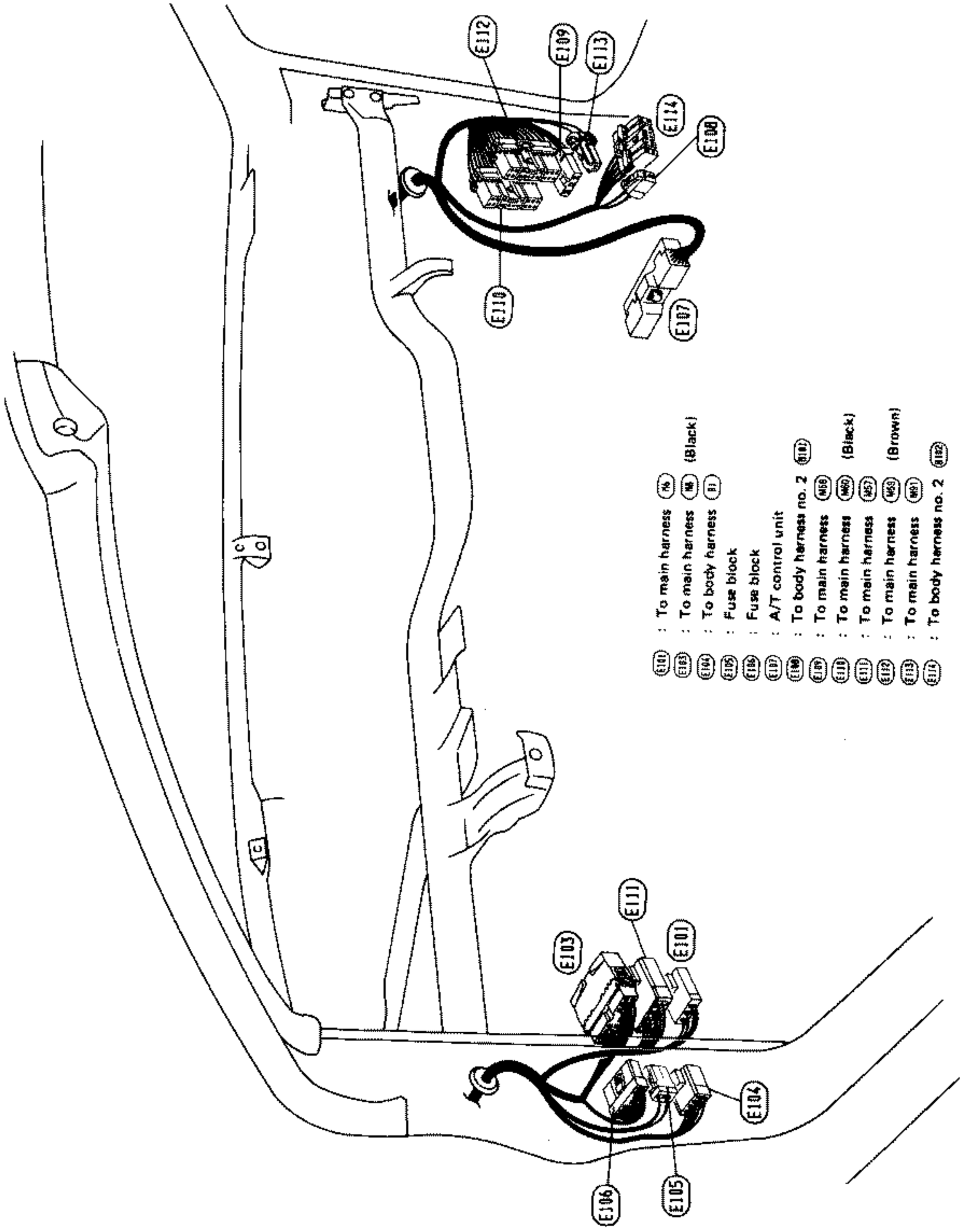

E111 : To main harness (76)
E103 : To main harness (M8) (Black)
E101 : To body harness (B)
E104 : Fuse block
E106 : Fuse block
E105 : A/T control unit
E111 : To body harness no. 2 (B10)
E103 : To main harness (M58)
E101 : To main harness (M60) (Black)
E104 : To main harness (M57)
E106 : To main harness (M59) (Brown)
E105 : To main harness (M61)
E111 : To body harness no. 2 (B12)

SEL398P

Z.ONE.DATSUN

Back Door Harness L.H.

(D201) : To body harness (B28)
(D202) : To body harness (B21)
(D203) : Rear window defogger
(D204) : Body ground
(D205) : Rear wiper motor
(D206) : Condenser
(D211) : Rear window defogger
(D212) : Body ground

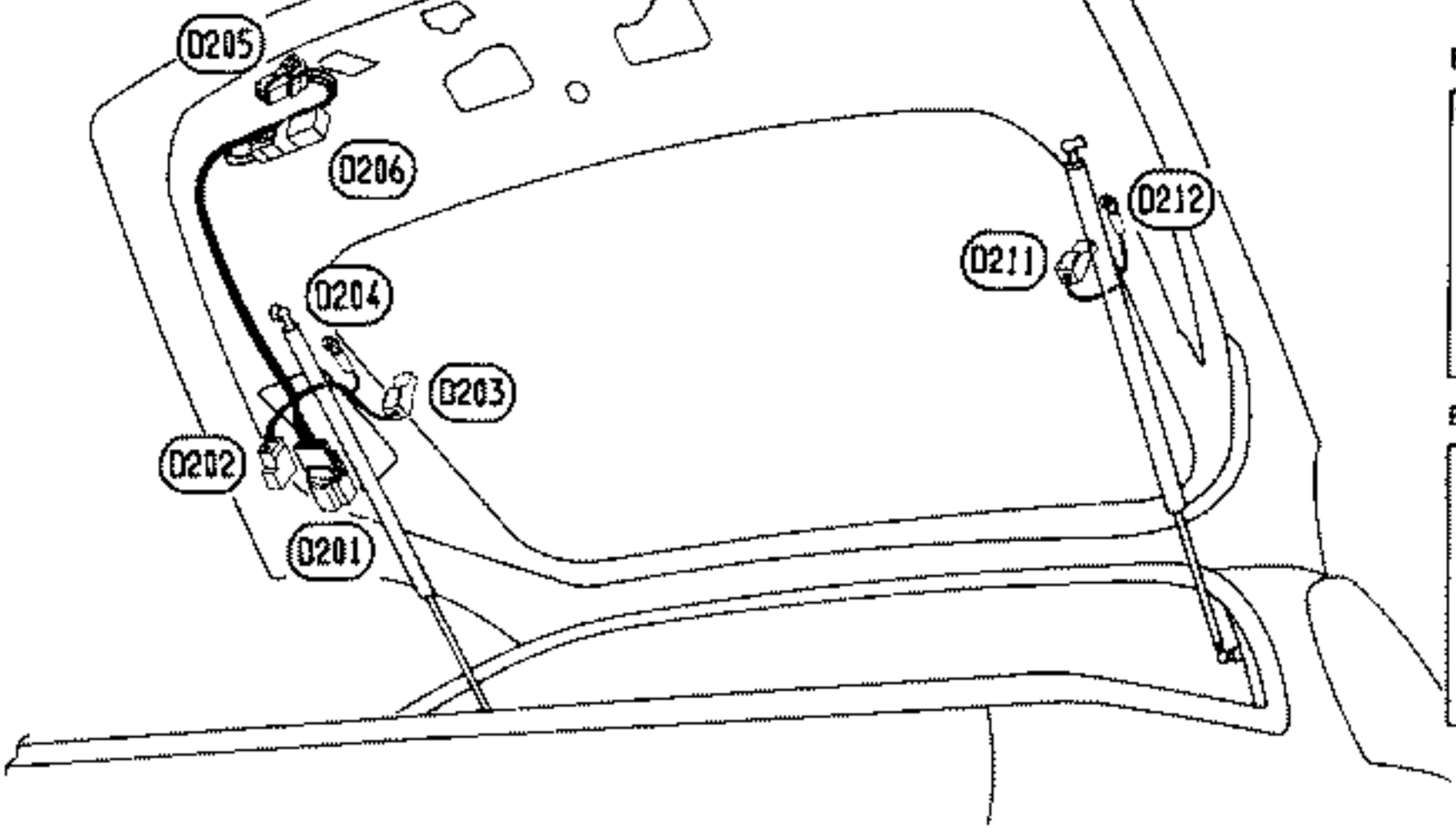

Body ground

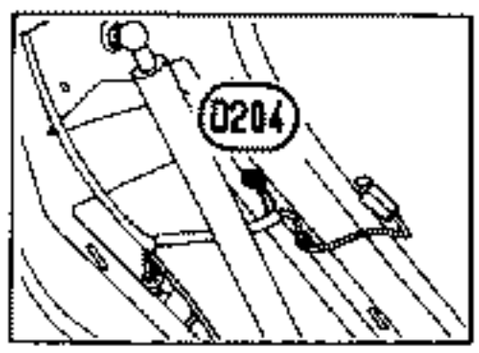

Body ground

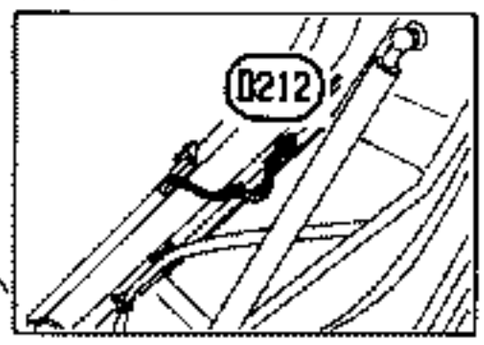

SEL403P

Back Door Harness R.H.

(D201) : To body harness (B28)
(D202) : To body harness (B21)
(D203) : Rear window defogger
(D204) : Body ground
(D205) : Rear wiper motor
(D206) : Condenser
(D207) : High-mounted stop lamp
(D211) : Rear window defogger
(D212) : Body ground

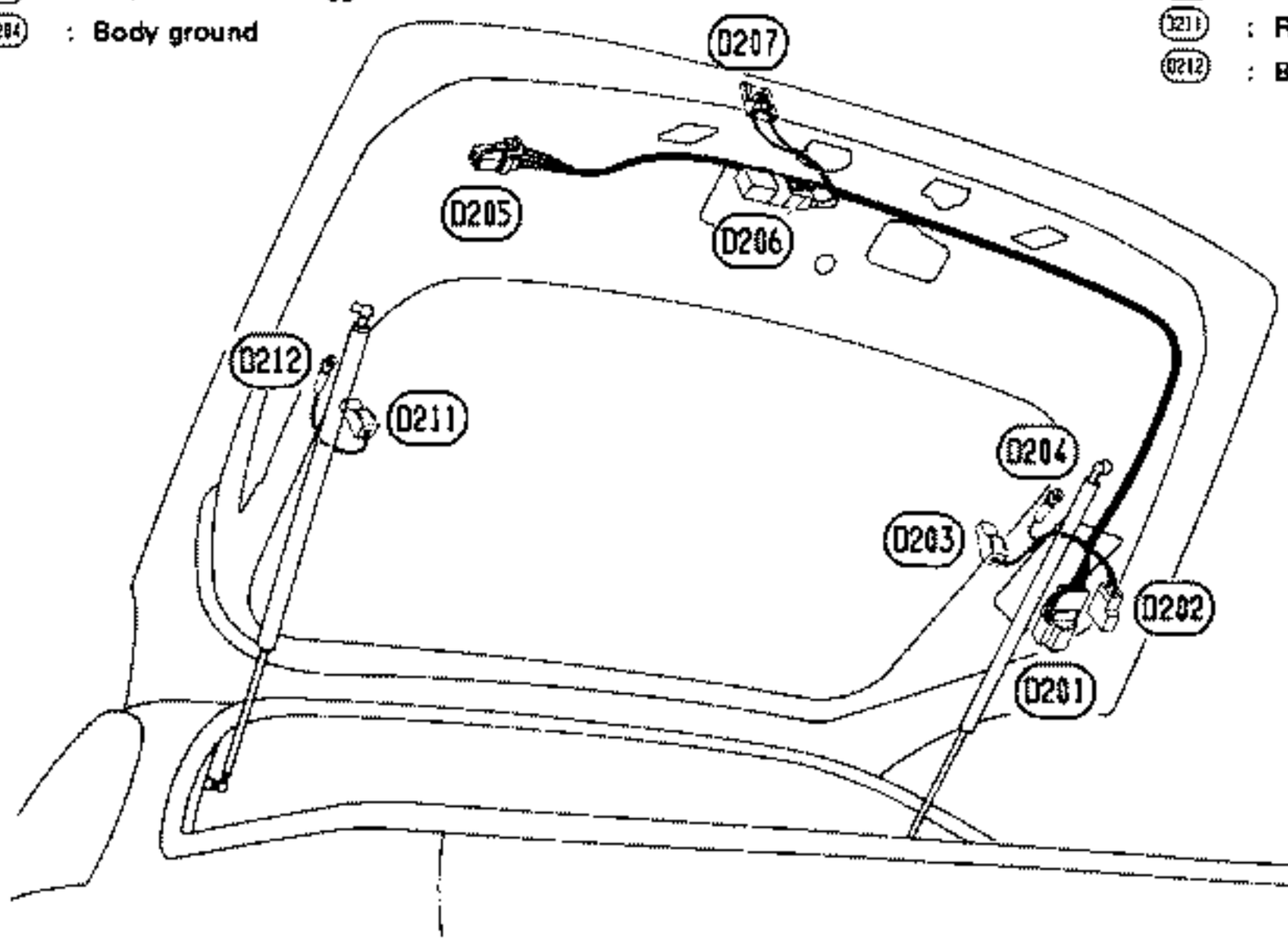

Body ground

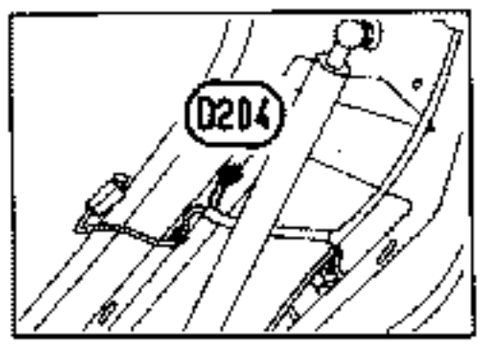

Body ground

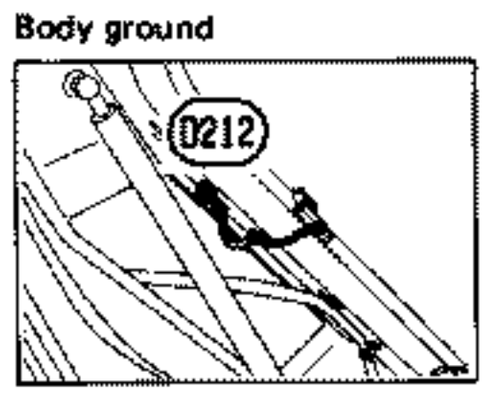

Z.ONE.DATSUN

SEL406P

Alternator Harness

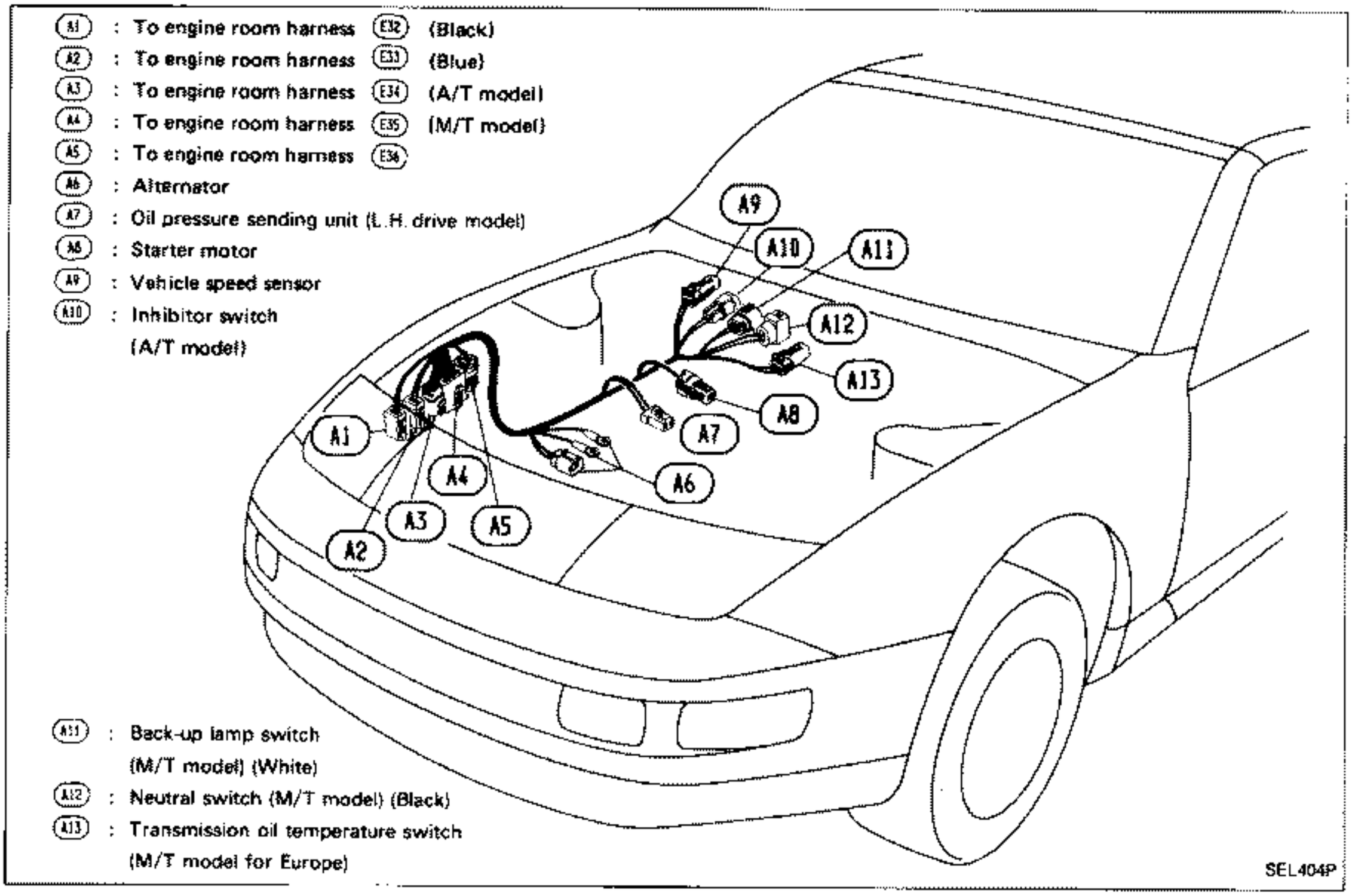

Door Harness L.H.

(D1) : To main harness (M71) (L.H. drive model)
To main harness (M56) (R.H. drive model)
(D2) : Door speaker
(D3) : Door mirror motor
(D4) : Power window regulator
(D5) : Power window sub-switch
(R.H. drive model)
(D6) : Door lock actuator (R.H. drive model)
(D7) : To main harness (M72) (L.H. drive model)
(D8) : Power window main switch
(L.H. drive model)
(D9) : Power window amplifier
(L.H. drive model)
(D10) : Door lock switch
(L.H. drive model)

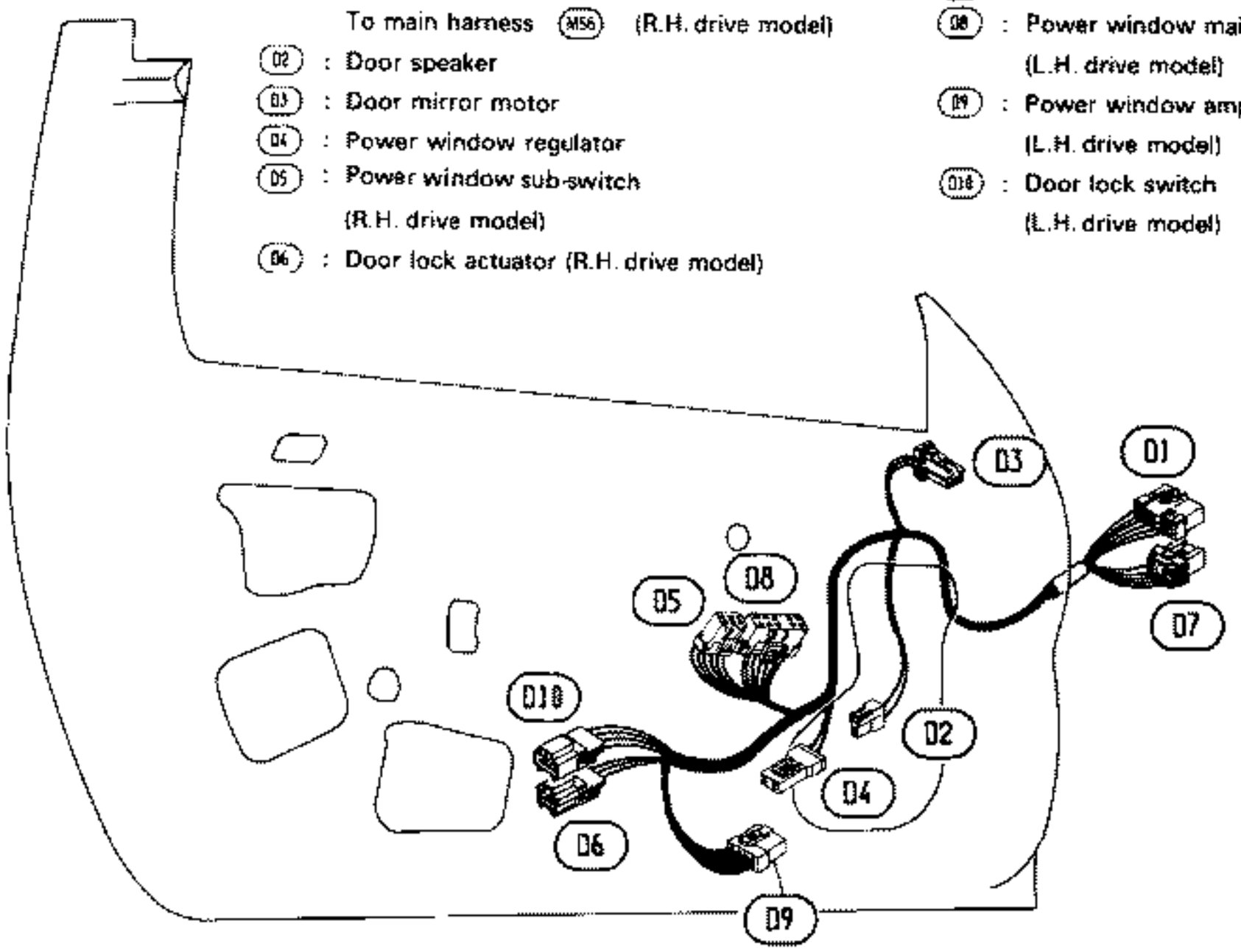

SEL401P

Door Harness R.H.

(D101) : To main harness (M13) (For Australia)
(D102) : Door speaker
(D103) : Door mirror motor
(D104) : Power window regulator
(D105) : Power window main switch
(R.H. drive model)
(D106) : Power window amplifier (R.H. drive model)
(D107) : Door lock switch (R.H. drive model)
(D108) : To main harness (M56) (L.H. drive model)
To main harness (M71)
(R.H. drive model for Europe)
(D109) : To main harness (M72)
(R.H. drive model for Europe)
(D110) : Power window sub-switch
(L.H. drive model)
(D111) : Door lock actuator (L.H. drive model)

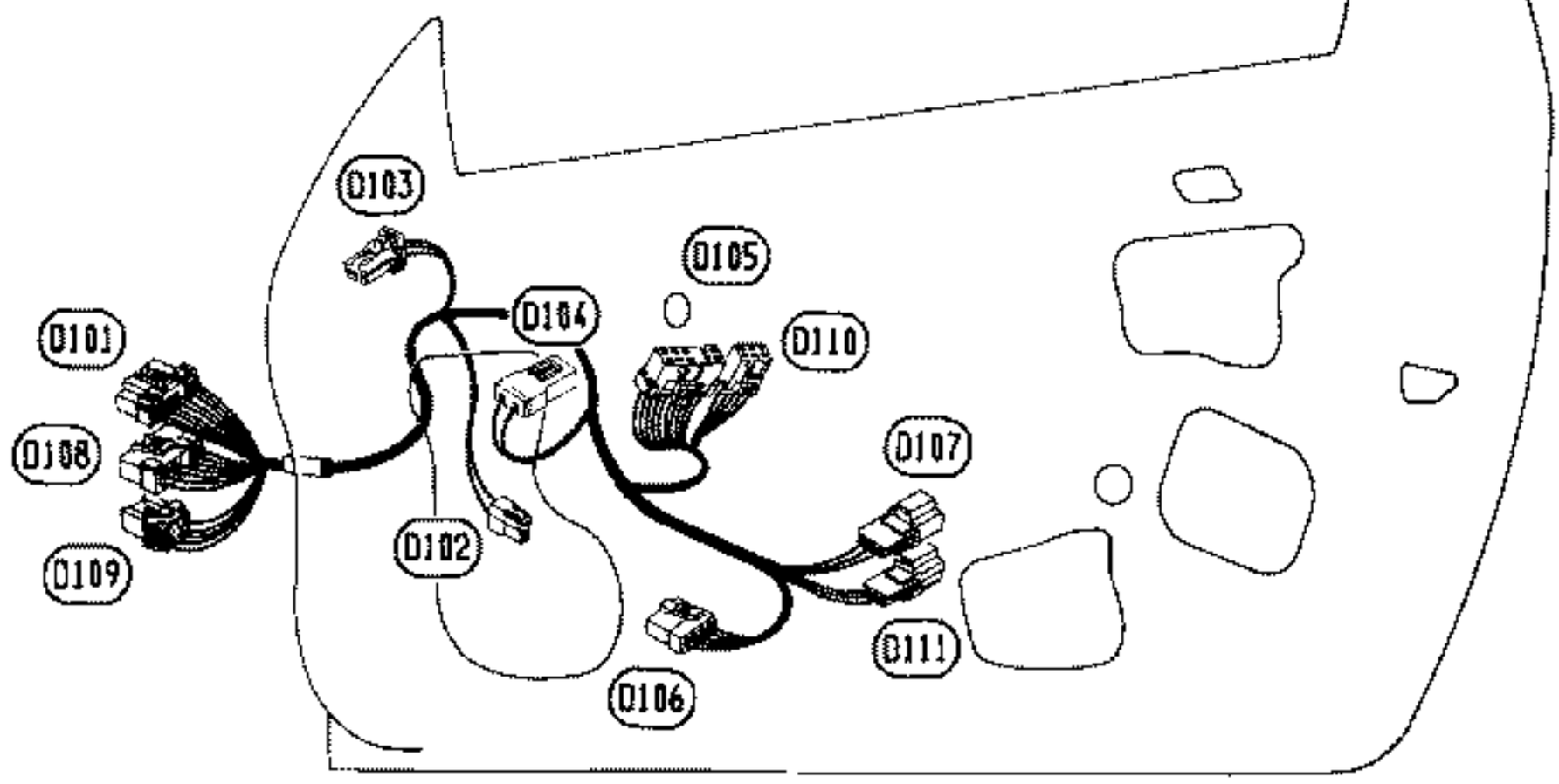

SEL402P

Z.ONE.DATSUN

HARNESS LAYOUT

E.F.I. Harness

Engine ground

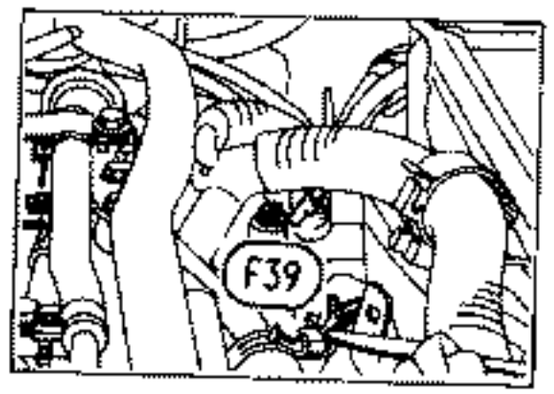

(F1) : E.C.C.S. control unit
(F2) : To main harness (M84)
(F3) : Resistor
(F5) : V.T.C. solenoid valve – L.H.
(F6) : Exhaust gas sensor – L.H.
(F7) : Air regulator
(F8) : To detonation sensor sub-harness
(F9) : Injector No. 6

(F22) : Compressor
(F23) : To engine room harnes (E18) (White)
(F24) : To engine room harness (E16) (Gray)
(F25) : To engine room harness (E12) (Brown)
(F26) : Check connector
(F27) : Check connector
(F28) : Body ground
(F29) : Air flow meter

(F38) : Crank angle sensor
(F31) : Thermal transmitter
(F32) : Engine temperature sensor
(F33) : Power transistor unit
(F34) : Power transistor unit
(F35) : E.G.R. control solenoid valve
(F36) : V.T.C. solenoid valve – R.H.
(F37) : Exhaust gas sensor – R.H.
(F38) : A.I.V. control solenoid valve
(F39) : Engine ground
(F40) : Injector No. 5
(F41) : Ignition coil No. 5
(F42) : Injector No. 3

Engine ground

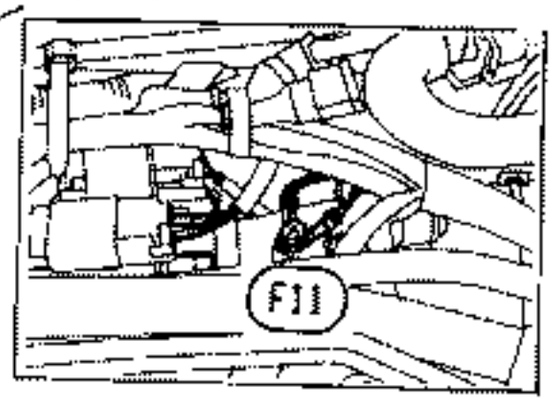

(F43) : Ignition coil No. 3
(F44) : Injector No. 1
(F45) : Ignition coil No. 1
(F46) : Wastegate valve control solenoid valve L.H. (Turbo model)
(F47) : Wastegate valve control solenoid valve R.H. (Turbo model)

(F10) : Ignition coil No. 6
(F11) : Engine ground
(F12) : A.A.C valve
(F13) : Injector No. 4
(F14) : F.I.C.D. solenoid valve
(F35) : Ignition coil No. 4
(F16) : P.R.V.R. control solenoid valve
(F17) : Fuel temperature sensor

(F18) : Injector No. 2
(F19) : Ignition coil No. 2
(F20) : Throttle valve switch
(F21) : Throttle sensor

Body ground

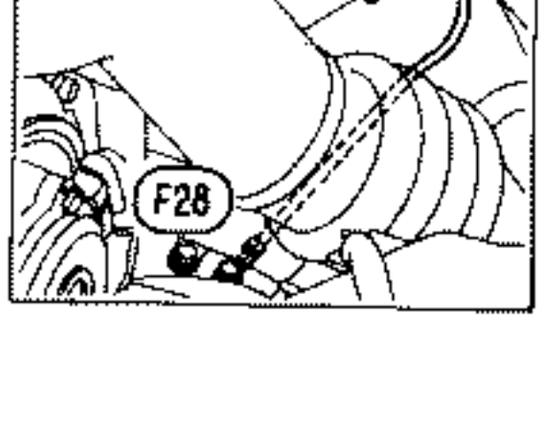

E.F.I. Harness (Cont'd)

R.H. DRIVE MODELS (Passenger compartment)

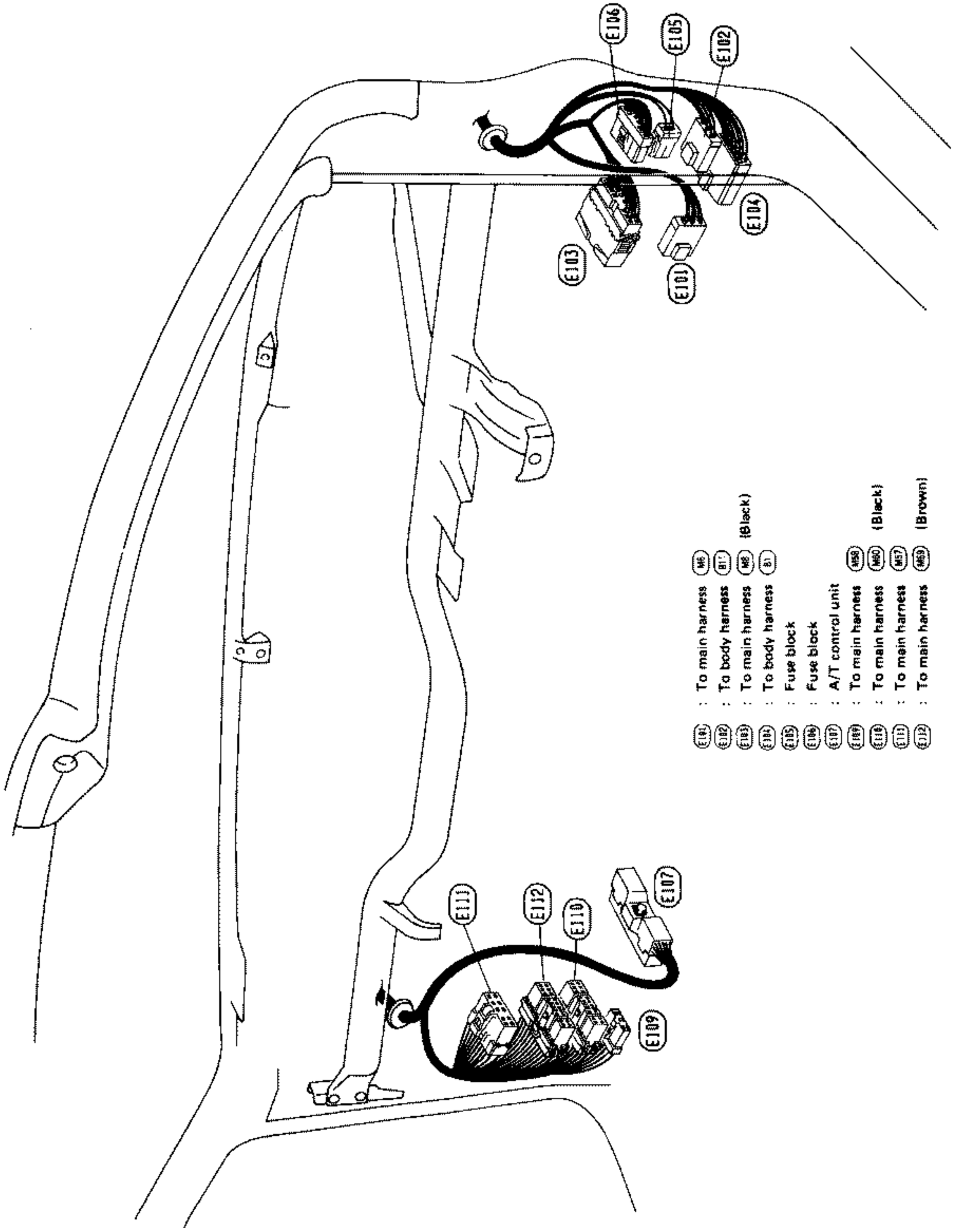

Z.ONE.DATSUN

SEL399P

NISSAN 300ZX(Z32 Series)
CIRCUIT DIAGRAM

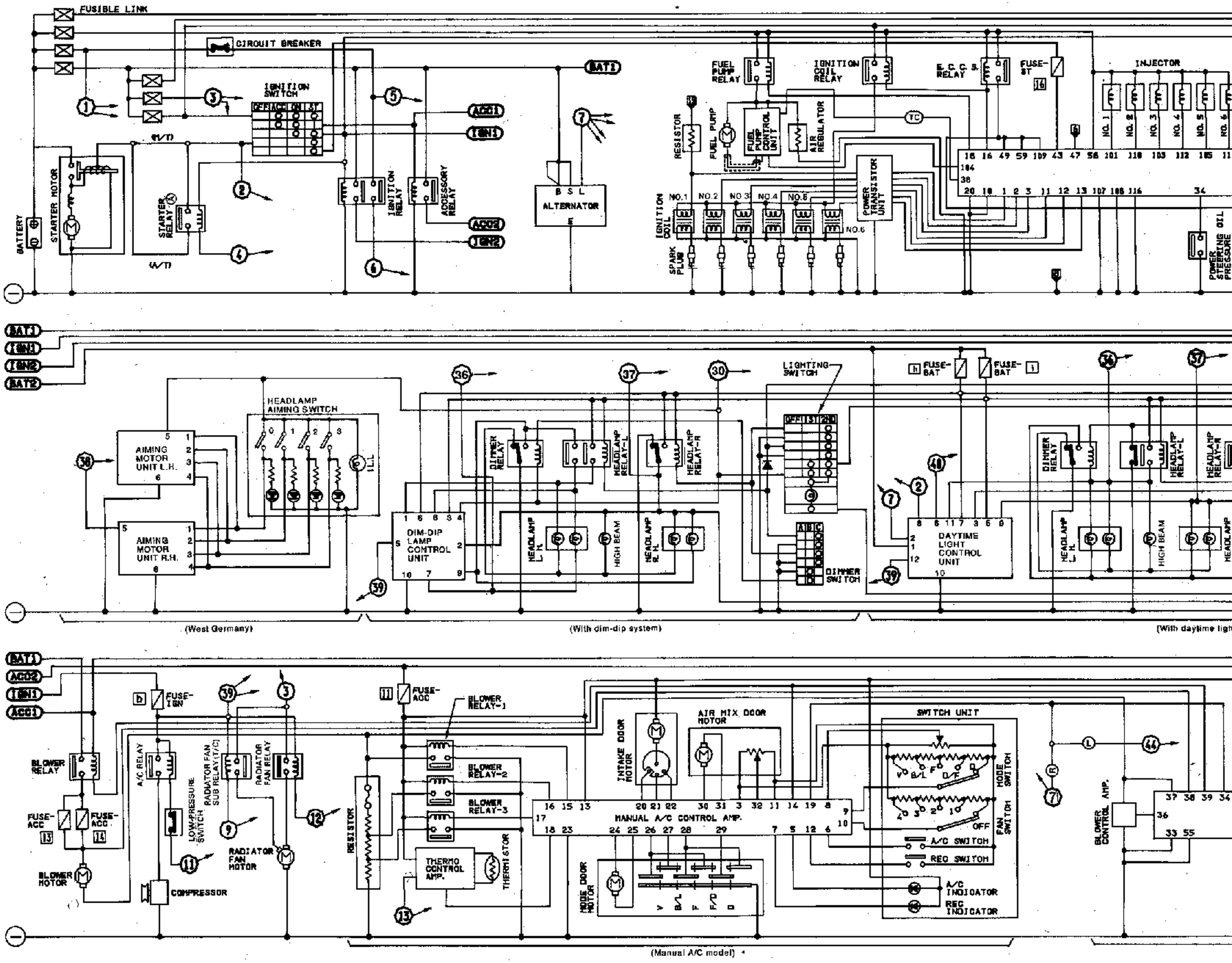

FUSE-IGN 8
F.I.C.D. SOLENOID VALVE
P.R.V.R. CONTROL SOLENOID VALVE
EXHAUST GAS SENSOR-L.H.
EXHAUST GAS SENSOR-R.H.
W.G.VALVE CONTROL SOLENOID VALVE (T/C)
THROTTLE VALVE SWITCH
IDLE
FULL
REVOLUTION SENSOR
FLUID TEMP. SENSOR
INHIBITOR SWITCH
P R N D 2 1
NO.5
NO.6
A.A.C. VALVE
A.I.V. CONTROL SOLENOID VALVE
E.G.R. CONTROL SOLENOID VALVE
V.T.C. SOLENOID VALVE-L.H.
V.T.C. SOLENOID VALVE-R.H.
L.H.
R.H.
E.C.C.S. CONTROL UNIT
A/T CONTROL UNIT
POWER STEERING OIL PRESSURE SWITCH
FUEL TEMPERATURE SENSOR
CRANK ANGLE SENSOR
AIR FLOW METER
DETONATION SENSOR
ENGINE TEMPERATURE SENSOR
THROTTLE SENSOR
NEUTRAL SW (M/T)
O.D. SWITCH
O.D. OFF INDICATOR
A/T CHECK LAMP
KICK DOWN SWITCH
LOCK-UP SOLENOID
OVERRUN CLUTCH SOLENOID
SHIFT SOLENOID A
SHIFT SOLENOID B
LINE PRESSURE SOLENOID
DROPPING RESISTOR
FRONT L.H.
FRONT R.H.
REAR L.H.
REAR R.H.
LIGHTING SWITCH
FUSE-BAT 3
FUSE-BAT 8
FUSE-BAT 20
FUSE-BAT 21
HEADLAMP RELAY-R
HEADLAMP R.H.
DAYTIME LIGHT RELAY
DIMMER SWITCH
DIMMER RELAY
HEADLAMP RELAY-L
HEADLAMP L.H.
HEADLAMP R.H.
HIGH BEAM
REAR FOG LAMP RELAY
REAR FOG IND.L
REAR FOG LAMP
REAR FOG LAMP SWITCH
CLEARANCE LAMP L.H.
CLEARANCE LAMP R.H.
LICENSE LAMP L.H.
LICENSE LAMP R.H.
GLOVE BOX LAMP
GLOVE BOX LAMP SWITCH
ASHTRAY ILL.
MANUAL A/C SWITCH UNIT ILL.
FRONT WIPER AND WASHER SWITCH ILL.
HAZARD SWITCH ILL.
CLUSTER ILL.
KEY ILL.
A/T ILL.
METER ILL.
POWER WINDOW MAIN SWITCH ILL.
TAIL LAMP L.H.
TAIL LAMP R.H.
STOP
me light system)
[Without dim-dip and daytime light system]
(L.H. drive m
SUNLOAD SENSOR
DEF. DUCT SENSOR
FOOT DUCT SENSOR
VENT DUCT SENSOR
AMBIENT SENSOR
IN-VEHICLE SENSOR (LOWER)
IN-VEHICLE SENSOR (UPPER)
MODE DOOR MOTOR
AUTO A/C CONTROL AMP.
SWITCH UNIT
INTAKE DOOR MOTOR
AIR MIX DOOR II MOTOR
AIR MIX DOOR I MOTOR
ASPIRATOR MOTOR
(Auto A/C model)
FUSE-ACC 6
FUSE-ACC 5
RADIO
DOOR SPEAKER R.H.
DOOR SPEAKER L.H.
REAR SPEAKER R.H.
REAR SPEAKER L.H.
RADIO REAR AMP.
POWER ANTENNA TIMER
POWER ANTENNA MOTOR
CLOCK
CIGARETTE LIGHTER
DOOR MIRROR R.H.
DOOR MIRROR L.H.

Z.ONE.DATSUN

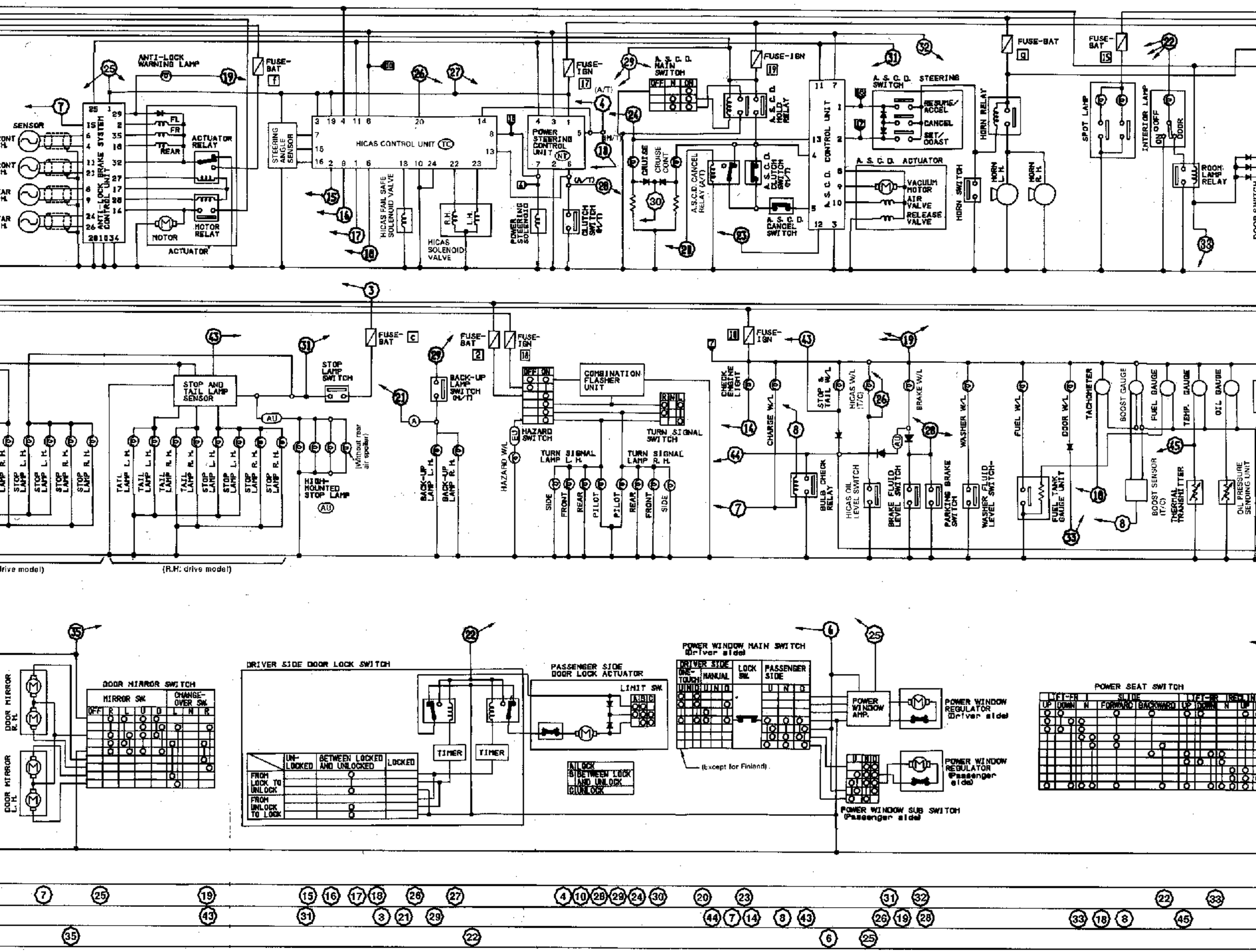

ANTI-LOCK WARNING LAMP
FUSE-BAT
SENSOR
ANTI-LOCK BRAKE SYSTEM CONTROL UNIT
ACTUATOR RELAY
MOTOR RELAY
MOTOR
ACTUATOR
STEERING ANGLE SENSOR
HICAS CONTROL UNIT
HICAS FAIL SAFE SOLENOID VALVE
HICAS SOLENOID VALVE
POWER STEERING CONTROL UNIT
POWER STEERING SOLENOID
CLUTCH SWITCH
FUSE-IGN
A.S.C.D. MAIN SWITCH
A.S.C.D. HOLD RELAY
CRUISE
CRUISE CONT
A.S.C.D. CANCEL RELAY
A.S.C.D. CLUTCH SWITCH
A.S.C.D. CANCEL SWITCH
A.S.C.D. CONTROL UNIT
A.S.C.D. SWITCH
STEERING
RESUME/ACCEL
CANCEL
SET/COAST
A.S.C.D. ACTUATOR
VACUUM MOTOR
AIR VALVE
RELEASE VALVE
HORN RELAY
HORN SWITCH
HORN L.H.
HORN R.H.
SPOT LAMP
INTERIOR LAMP
ROOM LAMP RELAY
STOP AND TAIL LAMP SENSOR
STOP LAMP SWITCH
BACK-UP LAMP SWITCH
COMBINATION FLASHER UNIT
HAZARD SWITCH
TURN SIGNAL SWITCH
TURN SIGNAL LAMP L.H.
TURN SIGNAL LAMP R.H.
HIGH-MOUNTED STOP LAMP
(Without rear air spoiler)
BACK-UP LAMP L.H.
BACK-UP LAMP R.H.
HAZARD W/L
CHECK ENGINE LIGHT
CHARGE W/L
STOP & TAIL W/L
HICAS W/L (T/C)
BRAKE W/L
WASHER W/L
FUEL W/L
DOOR W/L
TACHOMETER
BOOST GAUGE
FUEL GAUGE
TEMP. GAUGE
OIL GAUGE
BULB CHECK RELAY
HICAS OIL LEVEL SWITCH
BRAKE FLUID LEVEL SWITCH
PARKING BRAKE SWITCH
WASHER FLUID LEVEL SWITCH
FUEL TANK GAUGE UNIT
BOOST SENSOR (T/C)
THERMAL TRANSMITTER
OIL PRESSURE SENDING UNIT
(drive model)
(R.H. drive model)
DOOR MIRROR R.H.
DOOR MIRROR L.H.
DOOR MIRROR SWITCH
MIRROR SW.
CHANGE-OVER SW.
DRIVER SIDE DOOR LOCK SWITCH
UN-LOCKED
BETWEEN LOCKED AND UNLOCKED
LOCKED
FROM LOCK TO UNLOCK
FROM UNLOCK TO LOCK
TIMER
PASSENGER SIDE DOOR LOCK ACTUATOR
LIMIT SW.
A LOCK
B BETWEEN LOCK AND UNLOCK
C UNLOCK
POWER WINDOW MAIN SWITCH (Driver side)
DRIVER SIDE
ONE-TOUCH
MANUAL
LOCK SW.
PASSENGER SIDE
(Except for Finland)
POWER WINDOW AMP.
POWER WINDOW REGULATOR (Driver side)
POWER WINDOW REGULATOR (Passenger side)
POWER WINDOW SUB SWITCH (Passenger side)
POWER SEAT SWITCH
SLIDE
FORWARD
BACKWARD

BAT2
IGN2
ACC1
BAT1
FUSE-BAT 15
FUSE-ACC 12
FUSE-ACC 4
SPOT LAMP
INTERIOR LAMP
DOOR
ROOM LAMP RELAY
LUGGAGE ROOM LAMP
WARNING CHIME
TIME CONTROL UNIT
DOOR SWITCH (Driver side)
DOOR SWITCH (Passenger side)
BACK DOOR SWITCH
ILLUMINATION CONTROL SWITCH
BRIGHT
DARK
INTERMITTENT WIPER VOLUME
WIPER AMP.
FRONT WIPER MOTOR
WASHER MOTOR
WIPER
WASHER
REAR WIPER MOTOR
CONDENSER 18
REAR WIPER AND WASHER SWITCH
REAR WASHER MOTOR
HEADLAMP WASHER RELAY
HEADLAMP WASHER SWITCH
HEADLAMP WASHER MOTOR
BAT1
IGN1
FUSE-BAT 1
FUSE-BAT 8
DOOR W/L
TACHOMETER
BOOST GAUGE
FUEL GAUGE
TEMP. GAUGE
OIL GAUGE
ELECTRIC SPEEDOMETER
BOOST SENSOR (T/C)
THERMAL TRANSMITTER
OIL PRESSURE SENDING UNIT
VEHICLE SPEED SENSOR
DIFF OIL W/L
PUMP CANCEL RELAY
DIFFERENCIAL OIL WARNING LAMP SWITCH
SPEED CONTROL AMP. M
OIL COOLER RELAY
MISSION OIL W/L
DIFFERENCIAL OIL PUMP
TRANSMISSION OIL PUMP
REAR WINDOW DEFOGGER SWITCH
REAR WINDOW DEFOGGER RELAY
REAR WINDOW DEFOGGER
DIFFERENCIAL OIL TEMPERATURE SWITCH
(For Europe)
TRANSMISSION OIL TEMPERATURE SWITCH
POWER SEAT SWITCH
SEAT LIFTING MOTOR-Front
SEAT SLIDING MOTOR
SEAT LIFTING MOTOR-Rear
SEAT RECLINING MOTOR
SHOCK ABSORBER CONTROL UNIT
SHOCK ABSORBER ACTUATOR
REAR R.H.
REAR L.H.
(Turbo model)
CHECK CONNECTOR
E.C.C.S. control unit, A/T control unit, Auto A/C control unit, HICAS control unit
Power steering control unit
E.C.C.S. control unit
Ignition signal
Ground
HICAS control unit
E.C.C.S. control unit, AT control unit, HICAS control unit
A.S.C.D. control unit
Resistor
Tachometer
Check terminal
UP
FUSE ARRANGEMENT
FR
: L.H. drive model
: R.H. drive model
: A/T model
: M/T model
: For Europe
: For Australia
: Turbo model
: Non-turbo model

Z.ONE.DATSUN

NISSAN 300ZX (Z32 Series)

E. C. C. S. WIRING DIAGRAM

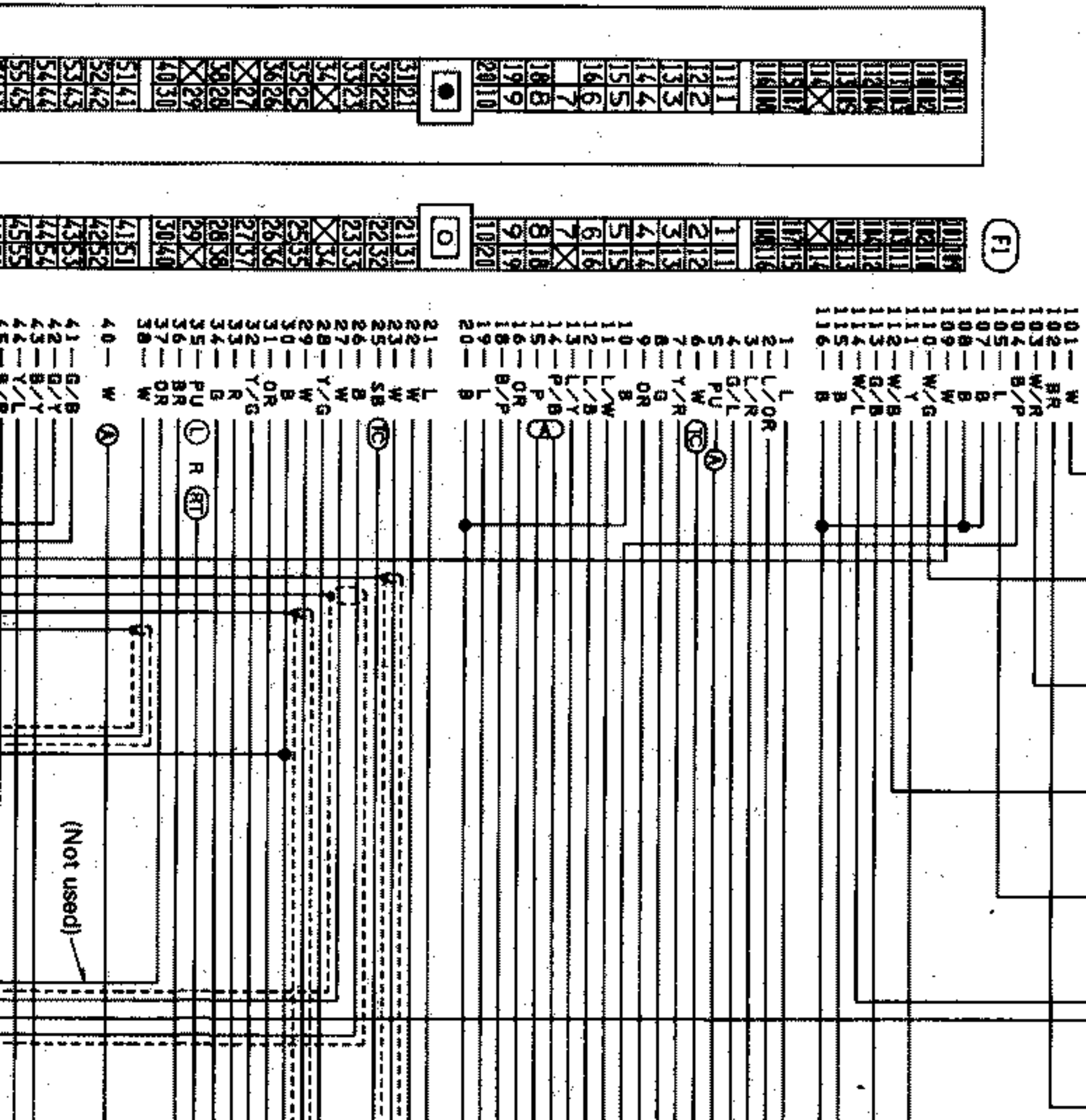

. V.
ITROL
ENOID
VE

WASTEGATE VALVE CONTROL SOLENOID VALVE - L.H.

WASTEGATE VALVE CONTROL SOLENOID VALVE - R.H.

F. I. C. D. SOLENOID VALVE

EXHAUST GAS SENSOR-R. H.

EXHAUST GAS SENSOR-L. H.

ENGINE TEMPERATURE SENSOR

(Sub-
harnes

TOR

To tachometer

FUEL PUMP RELAY

COMBINATION METER

CHECK ENGINE LIGHT

24 17

7 16 18 14

ELECTRIC SPEED-OMETER

IGNITION SWITCH

	OFF	ACC	ON	ST
1		○	○	○
2		○	○	
3			○	○
4				○
5				○

AUTO A/C CONTROL UNIT

MANUAL CONTROL

M12 M28 M29 M17 M34 M81 M37

OR B/P W/B W/B Y/G L Y/L Y/G Y/B B G W B/R B/Y W B/R B/Y L/B W/B

FUSE BLOCK (Refer to "POWER SUP ROUTING" in EL sect

(Main harness)

B/Y B/Y B/R G

7.5A 10A

M18 M11 M9

CONNECTOR

E186

(Main harness)

M60 (Black) E110

M6 E101

M58 E109

M59 (Brown) E112

M8 (Black) E103

(Engine room harness)

(Engine room harness)

(Engine harness