Note; Key No.1' Assy-oil pump includes Key No.2~12

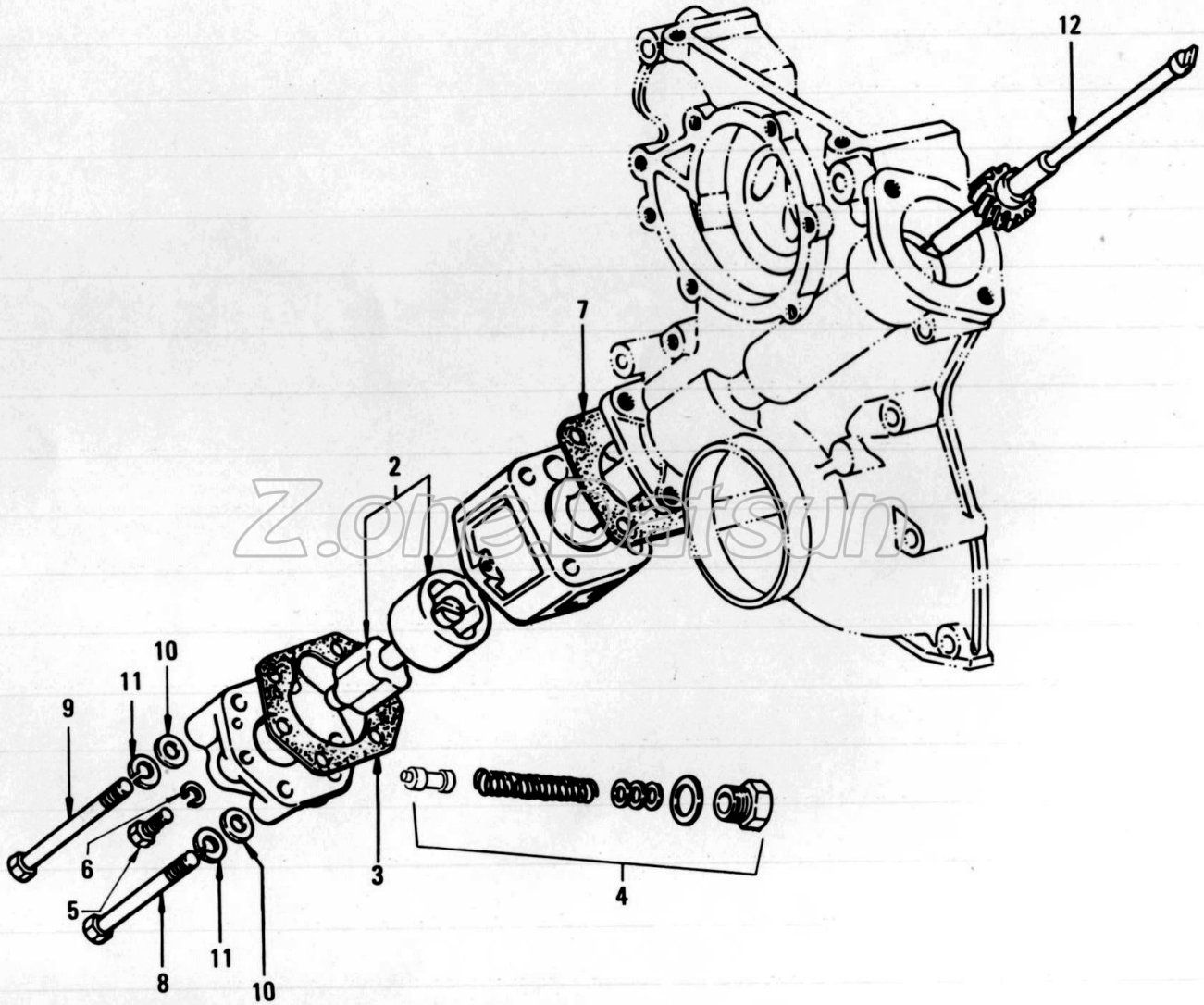

Z.on.datsun

© 1973 NISSAN MOTOR CO., LTD.

PRINTED IN JAPAN

NISSAN

OIL PUMP (L18)

S	KEY NO.	PART NO.	DESCRIPTION	Q'TY	UNIT PKG FOR DIST.	APPLIED MODEL	APPLIED DATE FROM	APPLIED DATE UP TO	ICA N	ICA F	SUPERSEDED
	101	15010-21001	ASSY-PUMP,OIL	1	1	L18					
	201	15020-21005	ASSY-SHAFT,OIL PUMP DRIVE	1	1						
	301	15025-21000	GASKET-OIL PUMP	1	10						
	401	15132-21005	VALVE-OIL REGULATOR	1	1						
	501	08110-62010	BOLT	2	50						
	601	08915-13610	WASHER-LOCK	2	50						
	701	15066-21001	GASKET-OIL PUMP TO FRONT COVER	1	10						
	801	15036-21000	BOLT	2	10						
	901	15037-21000	BOLT	2	10						
	1001	08915-43810	WASHER-PLAIN	4	50						
	1101	08915-13810	WASHER-LOCK	4	50						
	1201	15040-21001	ASSY-SPINDLE,OIL PUMP DRIVE	1	1						

NOTE:

PRINTED IN JAPAN

CARBURETOR (L18) (MANUAL)

NISSAN

Note; Key No.65 Gasket set.....A
Key No.66 Clip & etc set.....B
Key No.67 Screw & washer.....C

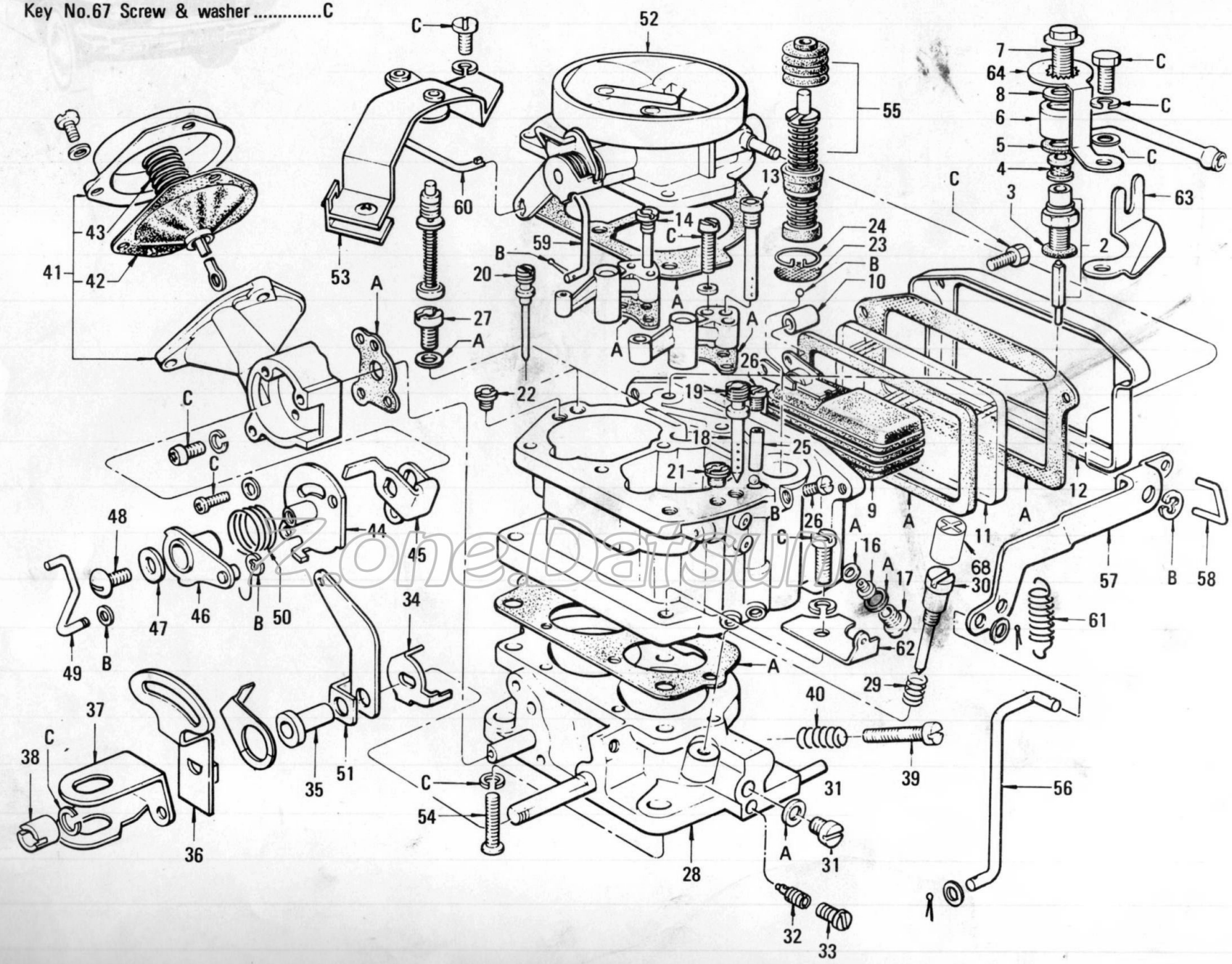

Zone Datsun

PRINTED IN JAPAN

© 1973 NISSAN MOTOR CO., LTD.

CARBURETOR (L18) (MANUAL)

S	KEY NO.	PART NO.	DESCRIPTION	Q'TY	UNIT PKG FOR DIST.	APPLIED MODEL	APPLIED DATE FROM	APPLIED DATE UP TO	ICA N	ICA F	SUPERSEDED
	101	16010-U3000	ASSY-CARBURETOR (NIKKI 213304-361)	1	1	L18 (MANUAL)		0773			
	02	16010-U3010	ASSY-CARBURETOR (NIKKI 213304-362-	1	1	L18 (MANUAL), (STD),(DX)	0873		N	N	16010-U3000
	201	16092-74500	COMP-FLOAT VALVE	1	10	L18 (MANUAL), (STD),(DX)					
	301	16060-31300	GASKET-FLOAT VALVE SEAT	3	50	L18 (MANUAL), (STD),(DX)					
	401	16098-N0100	ASSY-STRAINER	1	10	L18 (MANUAL), (STD),(DX)					
	501	16094-84700	GASKET-FUEL UNION	1	10	L18 (MANUAL), (STD),(DX)					
	601	16111-A8600	ASSY-UNION FUEL	1	5	L18 (MANUAL), (STD),(DX)					
	701	16108-A3501	BOLT-UNION	1	5	L18 (MANUAL), (STD),(DX)					
	801	16049-21605	GASKET-UNION BOLT	1	10	L18 (MANUAL), (STD),(DX)					
	901	16061-A3500	ASSY-FLOAT	1	1	L18 (MANUAL), (STD),(DX)					
	1001	16062-31300	COLLAR-FLOAT PIN	1	10	L18 (MANUAL), (STD),(DX)					
	1101	16125-35000	GLASS-LEVEL GAUGE	1	5	L18 (MANUAL), (STD),(DX)					
	1201	16063-35000	FRAME-WINDOW	1	5	L18 (MANUAL), (STD),(DX)					
	1301	16310-A3500	ASSY-JET,1ST MAIN AIR BLEED	1	10	L18 (MANUAL), (STD),(DX)					
	1401	16036-29900	ASSY-JET,2ND MAIN AIR BLEED	1	5	L18 (MANUAL), (STD),(DX)					

NOTE:

PRINTED IN JAPAN

© 1973 NISSAN MOTOR CO., LTD.

CARBURETOR (L18) (MANUAL)

NISSAN

S	KEY NO.	PART NO.	DESCRIPTION	Q'TY	UNIT PKG FOR DIST.	APPLIED MODEL	APPLIED DATE FROM	APPLIED DATE UP TO	ICA N	ICA F	SUPERSEDED
	1501	- 16033-79000	JET-1ST MAIN	1	10	L18 (MANUAL), (STD),(DX)					
	1601	- 16054-A6100	JET-2ND MAIN	1	10	L18 (MANUAL), (STD),(DX)					
	1701	- 16272-31300	PLUG-MAIN JET	2	10	L18 (MANUAL), (STD),(DX)					
	1801	- 16054-U0600	JET-SLOW	1	10	L18 (MANUAL), (STD),(DX)					
	1901	- 16286-A8600	PLUG-SLOW JET (PASSAGE)	1	5	L18 (MANUAL), (STD),(DX)					
	2001	- 16209-1101P	ASSY-JET,STEP	1	5	L18 (MANUAL), (STD),(DX)					
	2101	- 16204-A3800	JET-SLOW AIR BLEED	1	10	L18 (MANUAL), (STD),(DX)					
	2201	- 16052-35000	JET-STEP AIR BLEED	1	10	L18 (MANUAL), (STD),(DX)					
	2301	- 16245-35000	STRAINER-PUMP	1	10	L18 (MANUAL), (STD),(DX)					
	2401	- 16156-35000	CLIP-PUMP STRAINER	1	10	L18 (MANUAL), (STD),(DX)					
	2501	- 16285-69200	WEIGHT-PUMP	1	5	L18 (MANUAL), (STD),(DX)		0773			
	02	- 16285-84700	WEIGHT-PUMP	1	10	L18 (MANUAL), (STD),(DX)	0873		N	N	16285-69200
	2601	- 16286-74505	PLUG-PUMP JET	2	10	L18 (MANUAL), (STD),(DX)					
	2701	- 16101-U0600	ASSY-JET,POWER	1	5	L18 (MANUAL), (STD),(DX)					
	2801	- 16293-U0600	COMP-FLANGE	1	1	L18 (MANUAL), (STD),(DX)					

NOTE:

Z.one.Datsun

PRINTED IN JAPAN

© 1973 NISSAN MOTOR CO., LTD.

CARBURETOR (L18) (MANUAL)

S	KEY NO.	PART NO.	DESCRIPTION	Q'TY	UNIT PKG FOR DIST.	APPLIED MODEL	APPLIED DATE FROM	APPLIED DATE UP TO	ICA N	ICA F	SUPERSEDED
	2901	- 16145-31301	SPRING-IDLE ADJUST SCREW	1	10	L18 (MANUAL), (STD),(DX)					
*	3001	- 16144-A8600	SCREW-IDLE ADJUST	1	5	L18 (MANUAL), (STD),(DX)					
	02	- 16144-28800	SCREW-IDLE ADJUST	1	5	L18(MANUAL) (STD)(DX)			Y	Y	16144-A8600
	3101	- 16031-31300	PLUG-SLOW PORT	2	10	L18 (MANUAL), (STD),(DX)					
	3201	- 16026-A6100	NOZZLE-IDLE	1	2	L18 (MANUAL), (STD),(DX)					
	3301	- 16031-U0600	PLUG-IDLE NOZZLE	1	10	L18 (MANUAL), (STD),(DX)					
	3401	- 16277-U3000	ARM(A)-THROTTLE ADJUST	1	5	L18 (MANUAL), (STD),(DX)					
	3501	- 16123-A8600	COLLAR-1ST THROTTLE SHAFT	1	5	L18 (MANUAL), (STD),(DX)					
	3601	- 16127-U0600	ARM(B)-1ST THROTTLE SHAFT	1	5	L18 (MANUAL), (STD),(DX)					
	3701	- 16278-21000	LEVER-1ST THROTTLE SHAFT	1	5	L18 (MANUAL), (STD),(DX)		0773			
	02	- 16278-21800	ASSY-LEVER,1ST THROTTLE SHAFT	1	5	L18 (MANUAL), (STD),(DX)	0873		N	N	16278-21000
	3801	- 16124-21000	NUT-THROTTLE SHAFT	1	10	L18 (MANUAL) (STD),(DX)					
	3901	- 16114-74505	SCREW-THROTTLE ADJUST	1	10	L18 (MANUAL), (STD),(DX)					
	4001	- 16193-21600	SPRING-THROTTLE ADJUST SCREW	1	5	L18 (MANUAL, STD DX)					
	4101	- 16313-N0100	COMP-CHAMBER,DIAPHRAGM	1	1	L18 (MANUAL), (STD),(DX)					

NOTE:

PRINTED IN JAPAN

© 1973 NISSAN MOTOR CO., LTD.

CARBURETOR (L18) (MANUAL)

S	KEY NO.	PART NO.	DESCRIPTION	Q'TY	UNIT PKG FOR DIST.	APPLIED MODEL	APPLIED DATE FROM	APPLIED DATE UP TO	ICA N	ICA F	SUPERSEDED
	4201	- 16093-29900	ASSY-DIAPHRAGM,2ND THROTTLE	1	1	L18 (MANUAL), (STD),(DX)					
	4301	- 16140-37000	SPRING-DIAPHRAGM	1	10	L18 (MANUAL), (STD),(DX)					
	4401	- 16320-U0600	ASSY-PLATE,CHAMBER COVER	1	10	L18 (MANUAL), (STD),(DX)		0773			
	02	- 16320-U0601	ASSY-PLATE,CHAMBER COVER	1		L18 (MANUAL), (STD),(DX)	0873		N	N	16320-U0600
	4501	- 16377-21005	ASSY-LEVER,2ND THROTTLE SHAFT	1	5	L18 (MANUAL), (STD),(DX)					
	4601	- 16283-U0600	ASSY-ARM,2ND THRATTLE RETURN	1	10	L18 (MANUAL), (STD),(DX)					
	4701	- 16072-36702	WASHER-RETURN ARM SET SCREW	1	10	L18 (MANUAL), (STD),(DX)					
	4801	- 16126-21005	SCREW-RETURN ARM SET	1	10	L18 (MANUAL), (STD),(DX)					
	4901	- 16141-U3000	LINK-THROTTLE SHAFT CONNCT	1	5	L18 (MANUAL), (STD),(DX)					
	5001	- 16194-21000	SPRING-2ND THROTTLE RETURN	1	5	L18 (MANUAL), (STD),(DX)		0773			
	02	- 16194-U0400	SPRING-2ND THROTTLE RETURN	1	10	L18 (MANUAL), (STD),(DX)	0873		N	N	16194-21000
	5101	- 16133-A8600	LEVER-STARTING	1	5	L18 (MANUAL), (STD),(DX)					
	5201	- 16011-U3000	COMP-AIR HORN	1	1	L18 (MANUAL), (STD),(DX)					
	5301	- 16155-A8600	ASSY-HOLDER,CHOKE	1	5	L18 (MANUAL), (STD),(DX)					
	5401	- 16172-37000	ASSY-SCREW,FLANGE SET	1	5	L18 (MANUAL), (STD),(DX)					

NOTE:

Z.one.Datsun

© 1973 NISSAN MOTOR CO., LTD.

REVISED: DECEMBER 1973
PRINTED IN JAPAN

CARBURETOR (L18) (MANUAL)

S	KEY NO.	PART NO.	DESCRIPTION	Q'TY	UNIT PKG FOR DIST.	APPLIED MODEL	APPLIED DATE FROM	APPLIED DATE UP TO	ICA N	ICA F	SUPERSEDED
	5501	- 16138-36701	COMP-PLUNGER PUMP	1	5	L18 (MANUAL), (STD),(DX)		0773			
	02	- 16138-U0600	COMP-PLUNGER PUMP	1		L18 (MANUAL), (STD),(DX)	0873		N	N	16138-36701
	5601	- 16081-U0300	ROD-PUMP,CONNECTING	1	10	L18 (MANUAL), (STD),(DX)					
	5701	- 16195-A3500	ARM-PUMP	1	5	L18 (MANUAL), (STD),(DX)					
	5801	- 16143-32200	LINK-PUMP ARM	1	10	L18 (MANUAL), (STD),(DX)					
	5901	- 16248-A8601	ROD-STARTING,CONNECTING	1	5	L18 (MANUAL), (STD),(DX)					
	6001	- 16248-A8600	ROD-CHOKE,LEVER CONNECTING	1	5	L18 (MANUAL), (STD),(DX)					
	6101	- 16160-A3500	SPRING-THROTTLE RETURN	1	5	L18 (MANUAL), (STD),(DX)					
	6201	- 16159-U0600	HANGER-THROTTLE RETURN & SPRING	1	10	L18 (MANUAL), (STD),(DX)					
	6301	- 16137-A8600	CLAMp-FUEL UNION	1	5	L18 (MANUAL), (STD),(DX)					
	6401	- 16138-A8900	CLAMp-UNION BOLT	1	5	L18 (MANUAL), (STD),(DX)					
	6501	- 16455-A3500	GASKET-SET	1	1	L18 (MANUAL), (STD),(DX)					
	6601	- 16475-B0100	CLIp-ETC SET	1	1	L18 (MANUAL), (STD),(DX)					
	6701	- 16465-B0100	SCREW & WASHER SET	1	1	L18 (MANUAL), (STD),(DX)					
	6801	- 16147-E6600	CAp-IDLE SCREW	1	5	L18 (MANUAL)					

NOTE:

PRINTED IN JAPAN

© 1973 NISSAN MOTOR CO., LTD.

NOTE

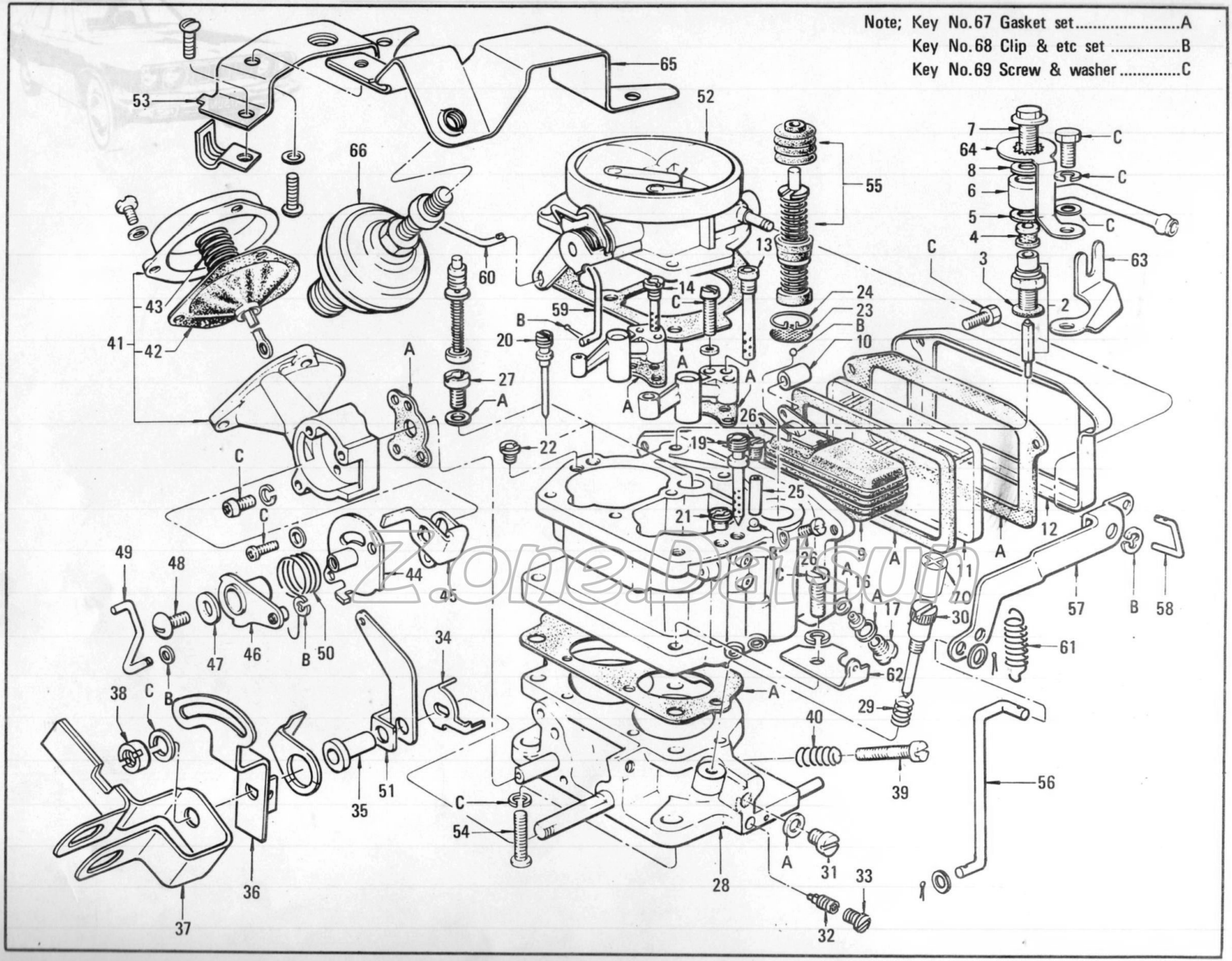

Z.one.Datsun

© 1973 NISSAN MOTOR CO., LTD.

PRINTED IN JAPAN

CARBURETOR (L18) (AUTO)

S	KEY NO.	PART NO.	DESCRIPTION	Q'TY	UNIT PKG FOR DIST.	APPLIED MODEL	APPLIED DATE FROM	APPLIED DATE UP TO	ICA N	ICA F	SUPERSEDED
	101	16010-U3100	ASSY-CARBURETOR (NIKKI 213304-421)	1	1	L18 (AUTO)					
	201	16092-74500	COMP-FLOAT VALVE	1	10	L18 (AUTO)					
	301	16060-31300	GASKET-FLOAT VALVE SEAT	3	50	L18 (AUTO)					
	401	16098-N0100	ASSY-STRAINER	1	10	L18 (AUTO)					
	501	16094-84700	GASKET-FUEL UNION	1	10	L18 (AUTO)					
	601	16111-A8600	ASSY-UNION,FUEL	1	5	L18 (AUTO)					
	701	16108-A3501	BOLT-UNION	1	5	L18(AUTO)					
	801	16049-21605	GASKET-UNION BOLT	1	10	L18 (AUTO)					
	901	16061-A3500	ASSY-FLOOT	1	1	L18 (AUTO)					
	1001	16062-31300	COLLAR-FLOAT PIN	1	10	L18 (AUTO)					
	1101	16125-35000	GLASS-LEVEL GAUGE	1	5	L18 (AUTO)					
	1201	16063-35000	FRAME-WINDOW	1	5	L18 (AUTO)					
	1301	16310-A3500	ASSY-JET,1ST MAIN AIR BLEED	1	10	L18 (AUTO)					
	1401	16036-29900	ASSY-JET,2ND MAIN AIR BLEED	1	5	L18 (AUTO)					
	1501	16033-79000	JET-1ST MAIN	1	10	L18 (AUTO)					
	1601	16054-A6100	JET-2ND MAIN	1	10	L18 (AUTO)					
	1701	16272-31300	PLUG-MAIN JET	2	10	L18 (AUTO)					
	1801	16054-U0600	JET-SLOW	1	10	L18 (AUTO)					
	1901	16286-A8600	PLUG-SLOW JET (PASSAGE)	1	5	L18 (AUTO)					
	2001	16209-1101P	ASSY-JET,STEP	1	5	L18 (AUTO)					
	2101	16204-A3800	JET-SLOW,AIR BLEED	1	10	L18 (AUTO)					
	2201	16052-35000	JET-STEP,AIR BLEED	1	10	L18 (AUTO)					

NOTE:

PRINTED IN JAPAN

© 1973 NISSAN MOTOR CO., LTD.

CARBURETOR (L18) (AUTO)

S	KEY NO.	PART NO.	DESCRIPTION	Q'TY	UNIT PKG FOR DIST.	APPLIED MODEL	APPLIED DATE FROM	APPLIED DATE UP TO	ICA N	ICA F	SUPERSEDED
	2301	16245-35000	STRAINER-PUMP	1	10	L18 (AUTO)					
	2401	16156-35000	CLIP-PUMP STRAINER	1	10	L18 (AUTO)					
	2501	16285-69200	WEIGHT-PUMP	1	5	L18 (AUTO)					
	2601	16286-74505	PLUG-PUMP,JET	2	10	L18 (AUTO)					
	2701	16101-U0600	ASSY-JET,POWER	1	5	L18 (AUTO)					
	2801	16293-U0600	COMP-FLANGE	1	1	L18 (AUTO)					
	2901	16145-31301	SPRING-IDLE ADJUST SCREW	1	10	L18 (AUTO)					
*	3001	16144-A8600	SCREW-IDLE ADJUST	1	5	L18 (AUTO)					
	02	16144-28800	SCREW-IDLE ADJUST	1	5	L18(AUTO)			Y	Y	16144-A8600
	3101	16031-31300	PLUG-SLOW PORT	2	10	L18 (AUTO)					
	3201	16026-A6100	NOZZLE-IDLE	1	2	L18 (AUTO)					
	3301	16031-U0600	PLUG-IDLE NOZZLE	1	10	L18 (AUTO)					
	3401	16277-U3000	ARM(A)-THROTTLE ADJUST	1	5	L18 (AUTO)					
	3501	16123-A8600	COLLAR-1ST THROTTLE SHAFT	1	5	L18 (AUTO)					
	3601	16127-U0600	ARM(B),1ST THROTTLE SHAFT	1	5	L18 (AUTO)					
	3701	16278-21800	ASSY-LEVER,1ST THROTTLE SHAFT	1	5	L18 (AUTO)					
	3801	16124-21000	NUT-THROTTLE SHAFT	1	10	L18 (AUTO)					
	3901	16114-74505	SCREW-THROTTLE ADJUST	1	10	L18 (AUTO)					
	4001	16193-21600	SPRING-THROTTLE ADJUST SCREW	1	5	L18 (AUTO)					
	4101	16313-N0100	COMP-CHAMBER,DIAPHRAGM	1	1	L18 (AUTO)					
	4201	16093-29900	ASSY-DIAPHRAGM,2ND THROTTLE	1	1	L18 (AUTO)					
	4301	16140-37000	SPRING-DIAPHRAGM	1	10	L18 (AUTO)					

NOTE:

Z.one.Datsun

© 1973 NISSAN MOTOR CO., LTD.

PRINTED IN JAPAN

CARBURETOR (L18) (AUTO)

S	KEY NO.	PART NO.	DESCRIPTION	Q'TY	UNIT PKG FOR DIST.	APPLIED MODEL	APPLIED DATE FROM	APPLIED DATE UP TO	ICA N	ICA F	SUPERSEDED
	4401	- 16320-U0600	ASSY-PLATE,CHAMBER COVER	1	10	L18 (AUTO)					
	4501	- 16377-21005	ASSY-LEVER,2ND THROTTLE SHAFT	1	5	L18 (AUTO)					
	4601	- 16283-U0600	ASSY-ARM,2ND THROTTLE RETURN	1	10	L18 (AUTO)					
	4701	- 16072-36702	WASHER-RETURN ARM SET SCREW	1	10	L18 (AUTO)					
	4801	- 16126-21005	SCREW-RETURN ARM SET	1	10	L18 (AUTO)					
	4901	- 16141-U3000	LINK-THROTTLE SHAFT CONNECT	1	5	L18 (AUTO)					
	5001	- 16194-21000	SPRING-2ND THROTTLE RETURN	1	5	L18 (AUTO)					
	5101	- 16133-A8600	LEVER-STARTING	1	5	L18 (AUTO)					
	5201	- 16011-U3000	COMP-HORN AIR	1	1	L18 (AUTO)					
	5301	- 16155-U3100	ASSY-HOLDER,CHOKE WIRE	1	5	L18 (AUTO)					
	5401	- 16172-37000	ASSY-SCREW,FLANGE SET	1	5	L18 (AUTO)					
	5501	- 16138-36701	COMP-PLUNGER,PUMP	1	5	L18 (AUTO)					
	5601	- 16081-U0300	ROD-PUMP,CONNECTING	1	10	L18 (AUTO)					
	5701	- 16195-A3500	ARM-PUMP	1	5	L18 (AUTO)					
	5801	- 16143-32200	LINK-PUMP ARM	1	10	L18 (AUTO)					
	5901	- 16248-A8601	ROD-STARTING CONNECTING	1	5	L18 (AUTO)					
	6001	- 16248-A8600	ROD-CHOKE LEVER CONNECTING	1	5	L18 (AUTO)					
	6101	- 16160-A3500	SPRING-THROTTLE RETURN	1	5	L18 (AUTO)					
	6201	- 16159-U0600	HANGER-THROTTLE,RETURN SPRING	1	10	L18 (AUTO)					
	6301	- 16137-A8600	CLAMP-FUEL UNION	1	5	L18 (AUTO)					
	6401	- 16138-A8900	CLAMP-UNION BOLT	1	5	L18 (AUTO)					
	6501	- 16258-U3100	HOLDER-DASH POT	1	5	L18 (AUTO)					

NOTE:

PRINTED IN JAPAN

© 1973 NISSAN MOTOR CO., LTD.

CARBURETOR (L18) (AUTO)

S	KEY NO.	PART NO.	DESCRIPTION	Q'TY	UNIT PKG FOR DIST.	APPLIED MODEL	APPLIED DATE FROM	APPLIED DATE UP TO	ICA N	ICA F	SUPERSEDED
	6601	- 16182-A9200	COMP-DASH POT	1	1	L18 (AUTO)					
	6701	- 16455-A3500	GASKET-SET	1	1	L18 (AUTO)					
	6801	- 16475-B0100	CLIP-ETC SET	1	1	L18 (AUTO)					
	6901	- 16465-B0100	SCREW & WASHER SET	1	1	L18 (AUTO)					
	7001	- 16147-E6600	CAP-IDLE SCREW	1	5	L18 (AUTO)					

NOTE:

PRINTED IN JAPAN

© 1973 NISSAN MOTOR CO., LTD.

PUB. No.: C-0100L

ILLUSTRATION No.: 13

These ILLUSTRATIONS have nothing to do with your vehicles.

CARBURETOR (TWIN) (FROM AUG. - '73)

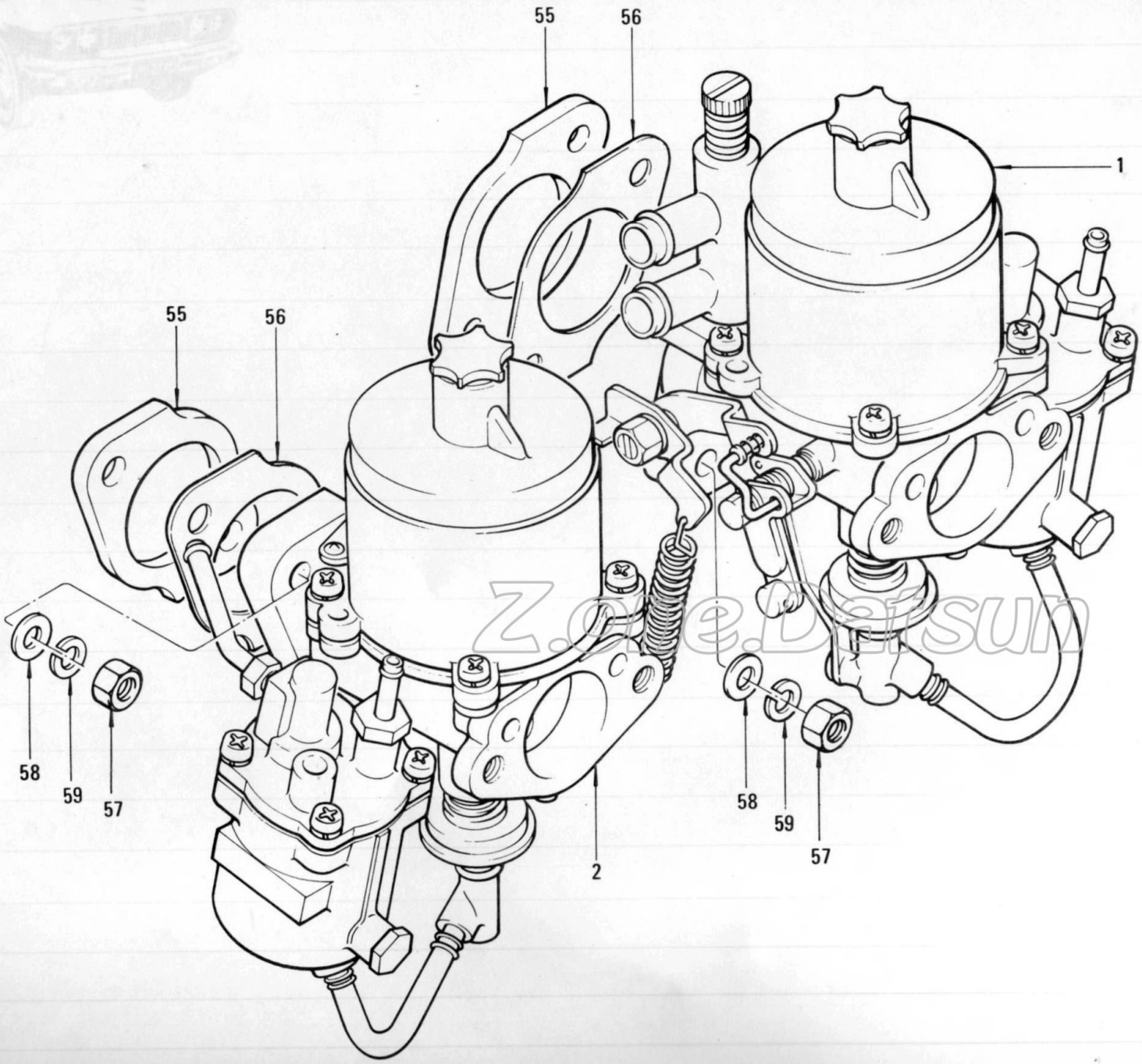

Z.ate.Datsun

©1973 NISSAN MOTOR CO., LTD.

PRINTED IN JAPAN

CARBURETOR (TWIN) (FROM AUG.-'73)

Note; Key No.48 Kit-gasket ..... A
Key No.49 Kit-screw & washer (A) ..... B
Key No.50 Kit-screw & washer (B) C

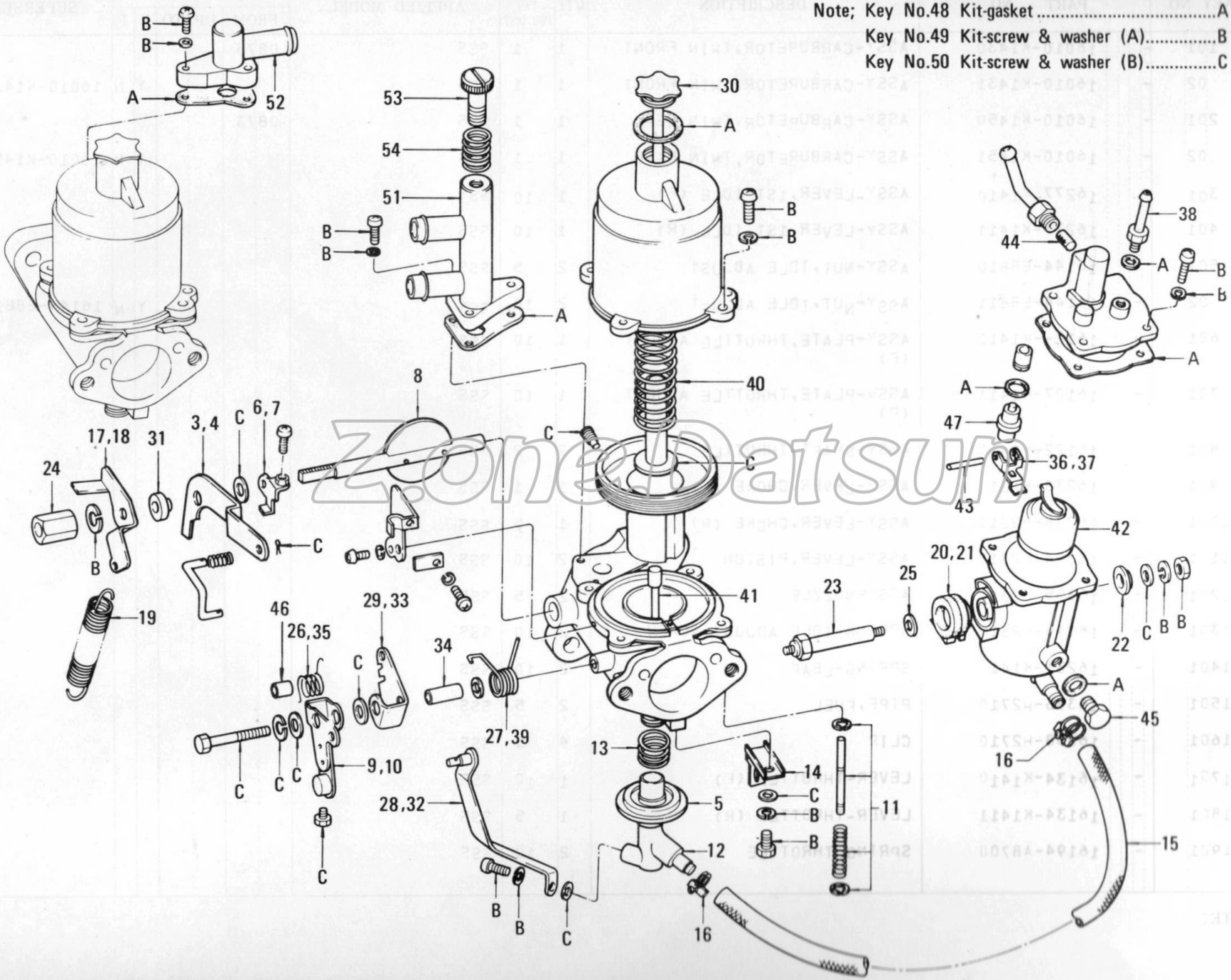

ZoneDatsun

PRINTED IN JAPAN

©1973 NISSAN MOTOR CO., LTD.

CARBURETOR (TWIN) (FROM AUG.-'73)

S	KEY NO.	PART NO.	DESCRIPTION	Q'TY	UNIT PKG FOR DIST.	APPLIED MODEL	APPLIED DATE FROM	APPLIED DATE UP TO	ICA N	ICA F	SUPERSEDED
*	101	16010-K1430	ASSY-CARBURETOR,TWIN FRONT	1	1	SSS	0873				
	02	16010-K1431	ASSY-CARBURETOR,TWIN FRONT	1	1	SSS			Y	N	16010-K1430
*	201	16010-K1450	ASSY-CARBURETOR,TWIN REAR	1	1	SSS	0873				
	02	16010-K1451	ASSY-CARBURETOR,TWIN REAR	1	1	SSS			Y	N	16010-K1450
	301	16277-K1410	ASSY-LEVER,1ST IDLE (F)	1	10	SSS					
	401	16277-K1411	ASSY-LEVER,1ST IDLE (R)	1	10	SSS					
*	501	16144-E8810	ASSY-NUT,IDLE ADJUST	2	5	SSS					
	02	16144-E8811	ASSY-NUT,IDLE ADJUST	2	10	SSS			Y	N	16144-E8810
	601	16127-K1410	ASSY-PLATE,THROTTLE ADJUST (F)	1	10	SSS					
	701	16127-K1411	ASSY-PLATE,THROTTLE ADJUST (R)	1	10	SSS					
	801	16122-K1410	ASSY-SHAFT,THROTTLE	2	2	SSS					
	901	16238-H2310	ASSY-LEVER,CHOKE (F)	1	1	SSS					
	1001	16238-H2311	ASSY-LEVER,CHOKE (R)	1	5	SSS					
	1101	16324-H2310	ASSY-LEVER,PISTON	2	10	SSS					
	1201	16355-H2310	ASSY-NOZZLE	2	5	SSS					
	1301	16145-H2310	SPRING-IDLE ADJUST SCREW	2	10	SSS					
	1401	16231-K1410	SPRING-LEAF	2	10	SSS					
	1501	16356-H2710	PIPE,FUEL	2	5	SSS					
	1601	16358-H2710	CLIP	4	5	SSS					
	1701	16134-K1410	LEVER-THROTTLE (F)	1	10	SSS					
	1801	16134-K1411	LEVER-THROTTLE (R)	1	5	SSS					
	1901	16194-A8700	SPRING-THROTTLE	2	10	SSS					

NOTE:

PRINTED IN JAPAN

© 1973 NISSAN MOTOR CO., LTD.

CARBURETOR (TWIN) (FROM AUG.-'73)

S	KEY NO.	PART NO.	DESCRIPTION	Q'TY	UNIT PKG FOR DIST.	APPLIED MODEL	APPLIED DATE FROM	APPLIED DATE UP TO	ICA N	ICA F	SUPERSEDED
	2001	- 16227-H2710	ADAPTER-GUM (F)	1	5	SSS					
	2101	- 16227-H2711	ADAPTER-GUM (R)	1	5	SSS					
	2201	- 16228-H2710	WASHER-GUM,8	2	10	SSS					
	2301	- 16322-22010	BOLT-8	2	10	SSS					
	2401	- 16214-25610	NUT	2	10	SSS					
	2501	- 16217-25610	WASHER	2	10	SSS					
	2601	- 16157-73410	SPRING-CONNECTING (A)	1	10	SSS					
	2701	- 16190-73410	SPRING-STARTER RETURN (A)	1	10	SSS					
	2801	- 16147-K1411	PLATE-CONNECTING (C)	1	5	SSS					
	2901	- 16147-73411	PLATE-CONNECTING (D)	1	5	SSS					
	3001	- 16341-K1410	ASSY-NUT,OIL CAP	2	10	SSS					
	3101	- 16239-14610	SLEEVE (A)	2	1	SSS					
	3201	- 16147-K1410	PLATE-CONNECTING (A)	1	5	SSS					
	3301	- 16147-14611	PLATE-CONNECTING (B)	1	5	SSS					
	3401	- 16116-14610	SLEEVE (B)	2	10	SSS					
	3501	- 16157-14610	SPRING-CONNECTING	1	10	SSS					
	3601	- 16062-H2310	LEVER-FLOAT (F)	1	10	SSS					
	3701	- 16062-H2710	LEVER-FLOAT (R)	1	10	SSS					
	3801	- 16126-E4310	NIppLE,OVER FLOW	2	10	SSS					
*	3901	- 16190-10401	SPRING-STARTER RETURN (B)	1	10	SSS					
	02	- 16190-H2710	SPRING-STARTER RETURN (B)	1	5	SSS			Y	N	16190-10401
	4001	- 16346-122 10	SPRING-SUCTION (23)	2	5	SSS					
	4101	- 16354-K1410	JET-NEEDLE (M-87)	2	10	SSS					

NOTE:

Zone Datsun

PRINTED IN JAPAN

© 1973 NISSAN MOTOR CO., LTD.

CARBURETOR (TWIN) (FROM AUG.-'73)

S	KEY NO.	PART NO.	DESCRIPTION	Q'TY	UNIT PKG FOR DIST.	APPLIED MODEL	APPLIED DATE FROM	APPLIED DATE UP TO	ICA N	ICA F	SUPERSEDED
	4201	- 16061-10400	FLOAT	2	1	SSS					
	4301	- 16066-25610	SHAFT-FLOAT	2	10	SSS					
	4401	- 16098-25710	FILTER	2	10	SSS					
	4501	- 16031-A8710	PLUG-DRAIN 8	2	10	SSS					
	4601	- 16116-H2310	SLEEVE	2	10	SSS					
	4701	- 16101-H2710	VELVE-NEEDLE (1.5)	2	1	SSS					
	4801	- 16455-K1410	KIT-GASKET	2	10	SSS					
	4901	- 16465-K1410	KIT-SCREW & WASHER (A)	2	5	SSS					
	5001	- 16475-K1410	KIT-SCREW & WASHER (B)	2	5	SSS					
	5101	- 16477-K1410	BODY-IMS (R)	1	1	SSS					
	5201	- 16477-K1411	BODY-IMS (F)	1	1	SSS					
	5301	- 16144-K1410	SCREW-IMS	1	10	SSS					
	5401	- 16145-N3310	SPRING-SCREW IMS	1	10	SSS					
	5501	- 16174-15800	INSULATOR-CARBURETOR	2	2	SSS					
	5601	- 16175-A5100	GASKET-INSULATOR	2	10	SSS					
	5701	- 08911-10810	NUT-HEX	4	50	SSS					
	5801	- 08915-43810	WASHER-PLAIN	4	50	SSS					
	5901	- 08915-13810	WASHER-SPRING	4	50	SSS					

NOTE:

PRINTED IN JAPAN

© 1973 NISSAN MOTOR CO.,

CARBURETOR FITTING & THROTTLE CONTROL (FROM AUG.-'73)

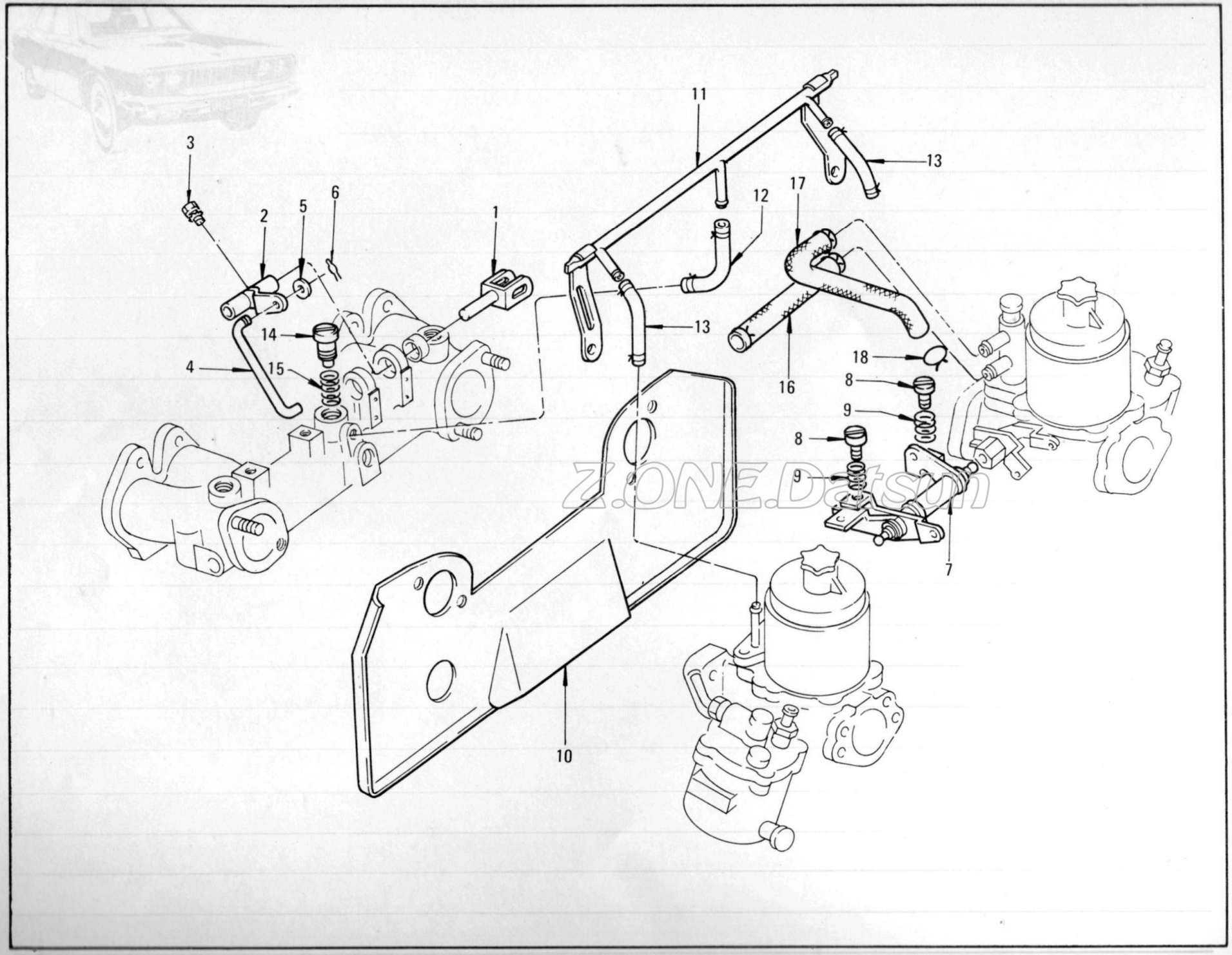

Z.ONE.Datsun

©1973 NISSAN MOTOR CO., LTD.

PRINTED IN JAPAN

NISSAN

CARBURETOR FITTING & THROTTLE CONTROL (FROM AUG.-'73)

S	KEY NO.	PART NO.	DESCRIPTION	Q'TY	UNIT PKG FOR DIST.	APPLIED MODEL	APPLIED DATE FROM	APPLIED DATE UP TO	ICA N	ICA F	SUPERSEDED
	101	16361-K1400	SHAFT-AUXILIALY THROTTLE	1	5	SSS	0873				
	201	16365-22001	ARM-AUXILIALY THROTTLE SHAFT	1	10	SSS	0873				
	301	08330-51619	SCREW (THROTTLE SHAFT FIX)	1		SSS	0873				
	401	16371-22001	ROD-CONNECTING	1	10	SSS	0873				
	501	16084-22000	WASHER-PLAIN	2	10	SSS	0873				
	601	16179-22000	RING-SNAP E TYPE	2	10	SSS	0873				
	701	16380-K1900	ASSY-SHAFT,THROTTLE	1	1	SSS	0873				
	801	16379-22000	SCREW-THROTTLE ADJUST	1	10	SSS	0873				
	901	16378-22000	SPRING-THROTTLE ADJUST	1	10	SSS	0873				
	1001	14330-K1400	PLATE-HEAT SHIELD	1	1	SSS	0873				
	1101	16090-K1400	TUBE-ISS	1	5	SSS	0873				
	1201	16095-K1400	HOSE-ISS,TUBE TO ISS	1	5	SSS	0873				
	1301	16096-K1400	HOSE-ISS,CARB.TO TUBE	2	5	SSS	0873				
	1401	16114-K1400	SCREW-ADJUST	1	10	SSS	0873				
*	1501	16193-K1400	SPRING-ADJUST	1	10	SSS	0873				
	02	16145-N3310	SPRING-ADJUST	1	2	SSS			Y	N	16193-K1400
	1601	16088-K1400	HOSE-IMS	1	5	SSS	0873				
	1701	16089-K1400	HOSE-IMS,CARB.TO AIR CLEANER	1	5	SSS	0873				
	1801	01557-00021	CLAMP-HOSE	2	50	SSS	0873				

NOTE:

PRINTED IN JAPAN

© 1973 NISSAN MOTOR CO., LTD.

PUB. No.: C-0100L

ILLUSTRATION No.: 14

This ILLUSTRATION has nothing to do with your vehicles.