AIR CLEANER (L18)

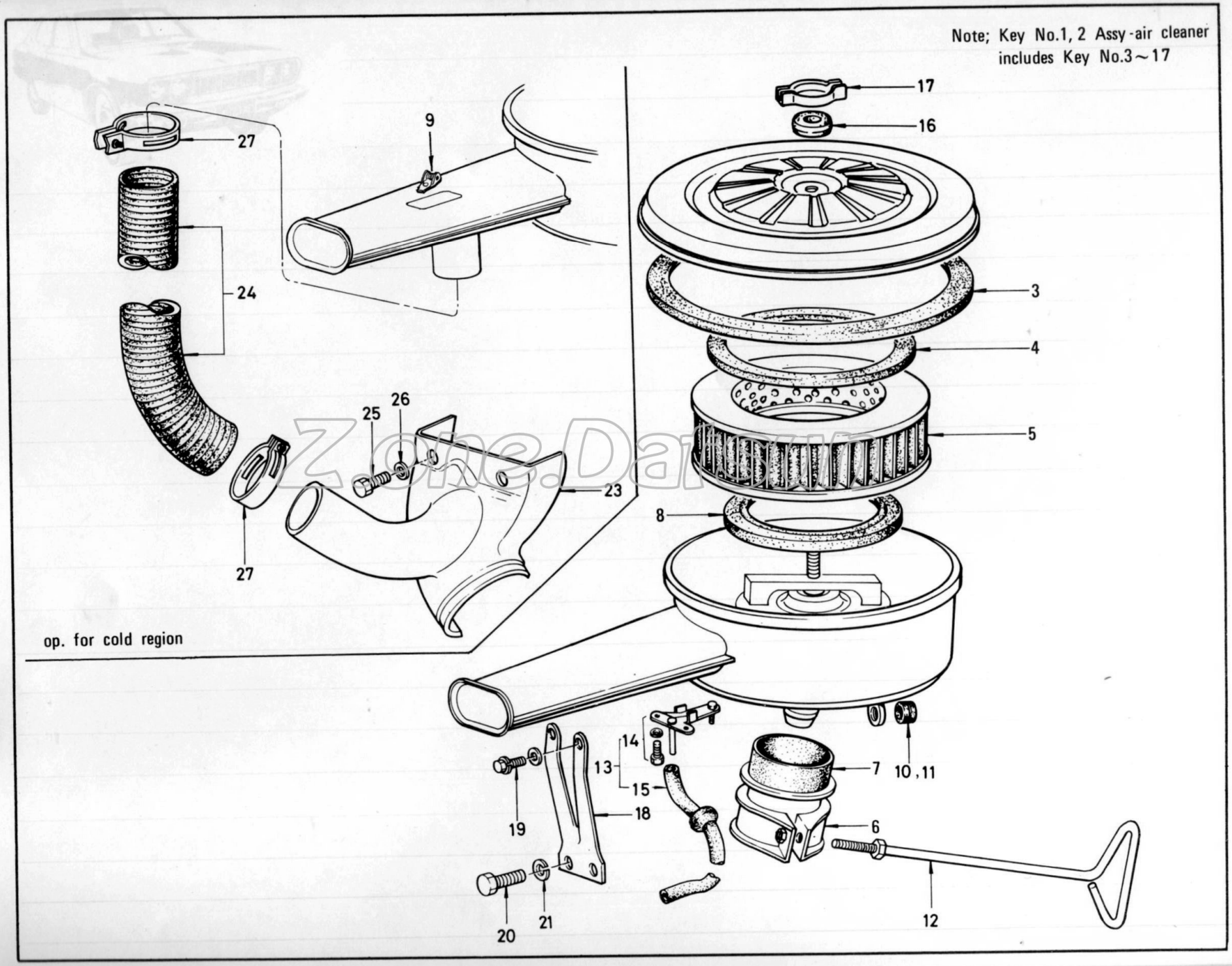

Z.one.Datsun

© 1973 NISSAN MOTOR CO., LTD.

REVISED: DECEMBER 1973

PRINTED IN JAPAN

AIR CLEANER (L18)

S	KEY NO.	PART NO.	DESCRIPTION	Q'TY	UNIT PKG FOR DIST.	APPLIED MODEL	APPLIED DATE FROM	APPLIED DATE UP TO	ICA N	ICA F	SUPERSEDED
*	101	16500-U0100	ASSY-AIR CLEANER,WITH IDLE COMPENSATOR	1	1						
	02	16500-U0400	ASSY-AIR CLEANER,WITH IDLE COMPENSATOR	1	1			1172	Y	Y	16500-U0100
	03	16500-U0401	ASSY-AIR CLEANER,WITH IDLE COMPENSATOR	1	1		1272		C	N	16500-U0400
	04	16500-U2805	ASSY-AIR CLEANER	1	1	L18(FRANCE)		0773			
*	201	16500-U0105	ASSY-AIR CLEANER FOR COLD REGION	1	1	OP					
	02	16500-U0405	ASSY-AIR CLEANER,FOR COLD REGION	1	1	OP		1172	Y	Y	16500-U0105
	03	16500-U0406	ASSY-AIR CLEANER,FOR COLD REGION	1	1	OP	1272		C	N	16500-U0405
	04	16500-U2815	ASSY-AIR CLEANER,FOR COLD REGION	1	1	OP,L18(FRANCE)		0773			
	05	16500-U2815	ASSY-AIR CLEANER	1	1	L18 (STD),(DX) (EUROPE)	0873				
	301	16548-U0100	PACKING	1	5						
	401	16536-73000	PACKING	1	5						
*	501	16546-23000	ASSY-ELEMENT,VISCOUS	1	1						
	02	16546-S0100	ASSY-ELEMENT,VISCOUS	1	1				Y	Y	16546-23000
	601	16560-73000	ASSY-BAND	2	5						
	701	16523-23000	INSULATOR	1	1						
	801	16547-73000	PACKING	1	5						
	901	16520-U0105	SPRING	1	10						
	1001	16533-62210	GROMMET	1	10						
	1101	22328-21000	GROMMET	1	10						

NOTE:

PRINTED IN JAPAN

© 1973 NISSAN MOTOR CO., LTD.

AIR CLEANER (L18)

NISSAN

S	KEY NO.	PART NO.	DESCRIPTION	Q'TY	UNIT PKG FOR DIST.	APPLIED MODEL	APPLIED DATE FROM	APPLIED DATE UP TO	ICA N	ICA F	SUPERSEDED
	1201	16561-13900	BAND-BOLT	1	5						
*	1301	16330-A8900	KIT-COMPENSATOR, IDLE (EXCEPT COLD)	1	1						
	1401	16331-H1000	ASSY-COMPENSATOR, IDLE	1	1						
	1501	16340-A8925	TUBE-IDLE COMPENSATOR	1	5						
*	1601	16568-08000	PACKING	1	10						
	02	16568-U2700	PACKING	1	10				Y	Y	16568-08000
	1701	16551-08000	NUT-WING	1	10						
	1801	16573-U0100	SUPPORT-AIR CLEANER	1	1						
	1901	08360-61214	BOLT-WITH LOCK WASHER	2	50						
	2001	08360-61012	BOLT	2							
	2101	08915-13610	WASHER-LOCK	2	50						
	2201	16572-10801	CLAMP-HOSE	2	10						
	2301	16590-U0100	COVER-EXHAUST MANIFOLD, FOR COLD REGION	1	1	OP					
	2401	16530-21001	DUCT-AIR CLEANER, FOR COLD REGION	1	1	OP					
	02	16530-U0100	DUCT-AIR HOT, FOR COLD REGION	1	1	OP			Y	N	16530-21001
	2501	08110-81201	BOLT, FOR COLD REGION	2	50	OP					
	2601	08915-13810	WASHER-LOCK, FOR COLD REGION	2	50	OP					
	2701	08722-13800	CLAMP, FOR COLD REGION	2	10	OP					

NOTE:

Set Substitution

Air Cleaner	16500-U0401 (16500-U0406)	⇨	16500-U0400 (16500-U0401)
HOSE	11826-K1700		16571-23002

PRINTED IN JAPAN

© 1973 NISSAN MOTOR CO., LTD.

PUB. No.: C-0100L

ILLUSTRATION No.: 16

This ILLUSTRATION has nothing to do with your vehicles.

AIR CLEANER (SSS) (FROM AUG.-'73)

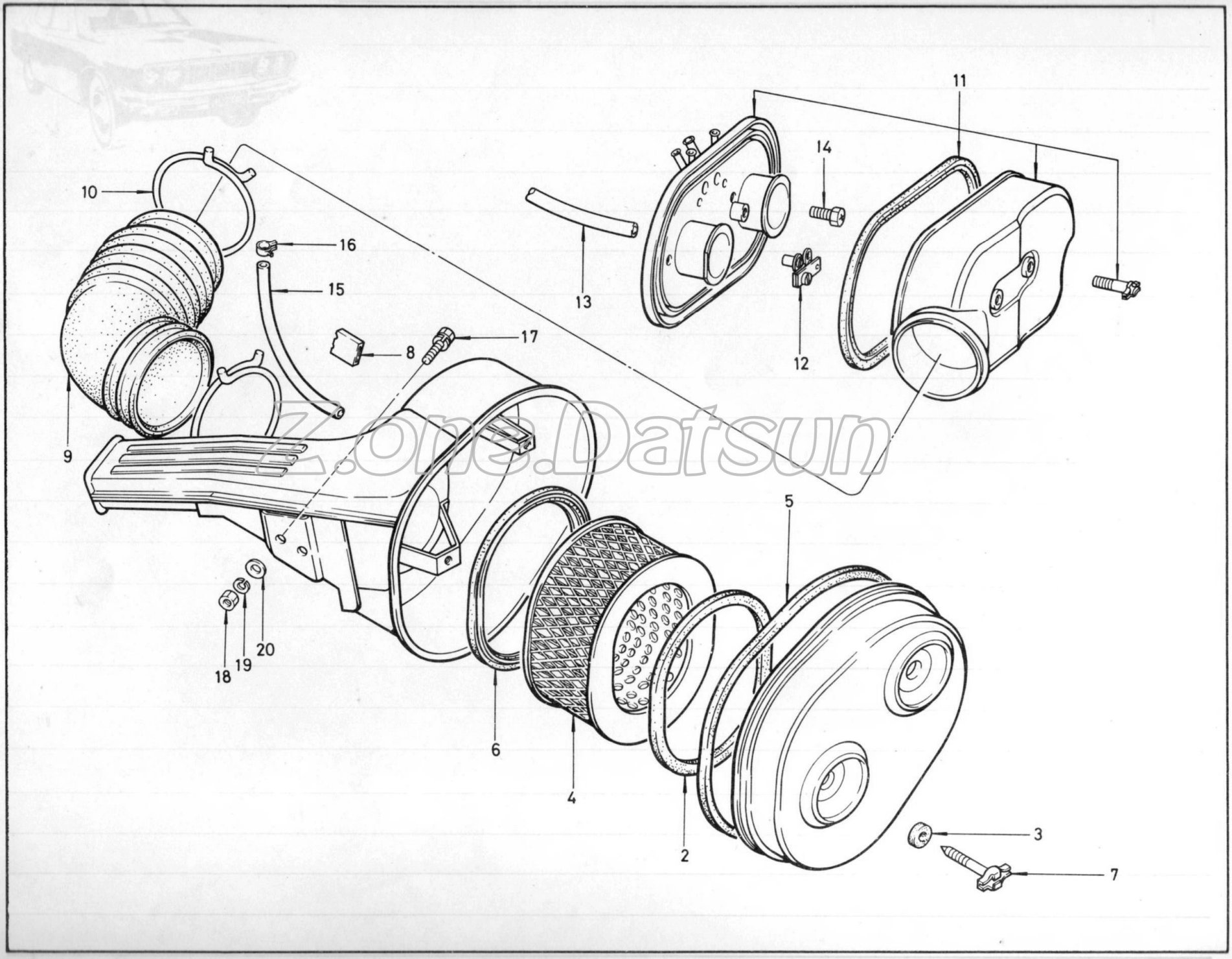

Zone.Datsun

©1973 NISSAN MOTOR CO., LTD.

REVISED: DECEMBER 1973

PRINTED IN JAPAN

AIR CLEANER (SSS) (FROM AUG.-'73)

S	KEY NO.	PART NO.	DESCRIPTION	Q'TY	UNIT PKG FOR DIST.	APPLIED MODEL	APPLIED DATE FROM	APPLIED DATE UP TO	ICA N	ICA F	SUPERSEDED
	101	16500-K2600	ASSY-CLEANER AIR	1	1	SSS	0873				
	201	16536-N1400	PACKING	2	5	SSS	0873				
	301	16568-H1000	ASSY-PACKING	2	10	SSS	0873				
	401	16546-N1400	ASSY-ELEMENT,PAPER	1	4	SSS	0873				
	501	16547-K0900	PACKING	1	5	SSS	0873				
	601	16536-N1400	PACKING	1	5	SSS	0873				
	701	16516-K0900	ASSY-BOLT,CENTER	2	10	SSS	0873				
	801	22472-E8000	CLAMP-HIGH & LOW TENSION CABLE	1	5	SSS	0873				
	901	16577-K1900	HOSE-AIR DUCT	1	1	SSS	0873				
	1001	16582-K0900	CLAMP-AIR DUCT HOSE	1	5	SSS	0873				
	1101	16535-K1901	ASSY-COVER,AIR DUCT	1	1	SSS	0873				
	1201	16331-H1000	ASSY-COMPENSATOR IDLE	1	1	SSS	0873				
	1301	16340-K1400	ASSY-TUBE,IDLE COMPENSATOR TO CONNECTOR	1	5	SSS	0873				
	1401	08360-81614	BOLT-HEX,WITH WASHER	8	50	SSS	0873				
*	1501	14912-A5501	TUBE-AIR CLEANER TO CARBURETOR	2		SSS	0873				
	02	14912-A5502	TUBE-AIR CLEANER TO CARBURETOR	2	1	SSS			Y	N	14912-A5501
	1601	16439-A0602	CLAMP-HOSE	4	10	SSS	0873				
	1701	08360-61626	SCREW-WITH LOCK WASHER AIR CLEANER TO BODY	2	50	SSS	0873				
	1801	08911-10610	NUT-HEX,AIR CLEANER TO BODY	2	50	SSS	0873				
	1901	08915-13610	WASHER-LOCK,AIR CLEANER TO BODY	2	50	SSS	0873				

NOTE:

PRINTED IN JAPAN

© 1973 NISSAN MOTOR CO., LTD.

AIR CLEANER (SSS) (FROM AUG.-'73)

S	KEY NO.	PART NO.	DESCRIPTION	Q'TY	UNIT PKG FOR DIST.	APPLIED MODEL	APPLIED DATE FROM	APPLIED DATE UP TO	ICA N	ICA F	SUPERSEDED
	2001	08915-53610	WASHER-PLAIN, AIR CLEANER TO BODY	2	50	SSS	0873				

NOTE:

© 1973 NISSAN MOTOR CO., LTD.

REVISED: DECEMBER 1973
PRINTED IN JAPAN

PUB. No.: C-0100L

ILLUSTRATION No.: 17

This ILLUSTRATION has nothing to do with your vehicles.

© 1973 NISSAN MOTOR CO., LTD.

FUEL STRAINER & FUEL HOSE (L18)

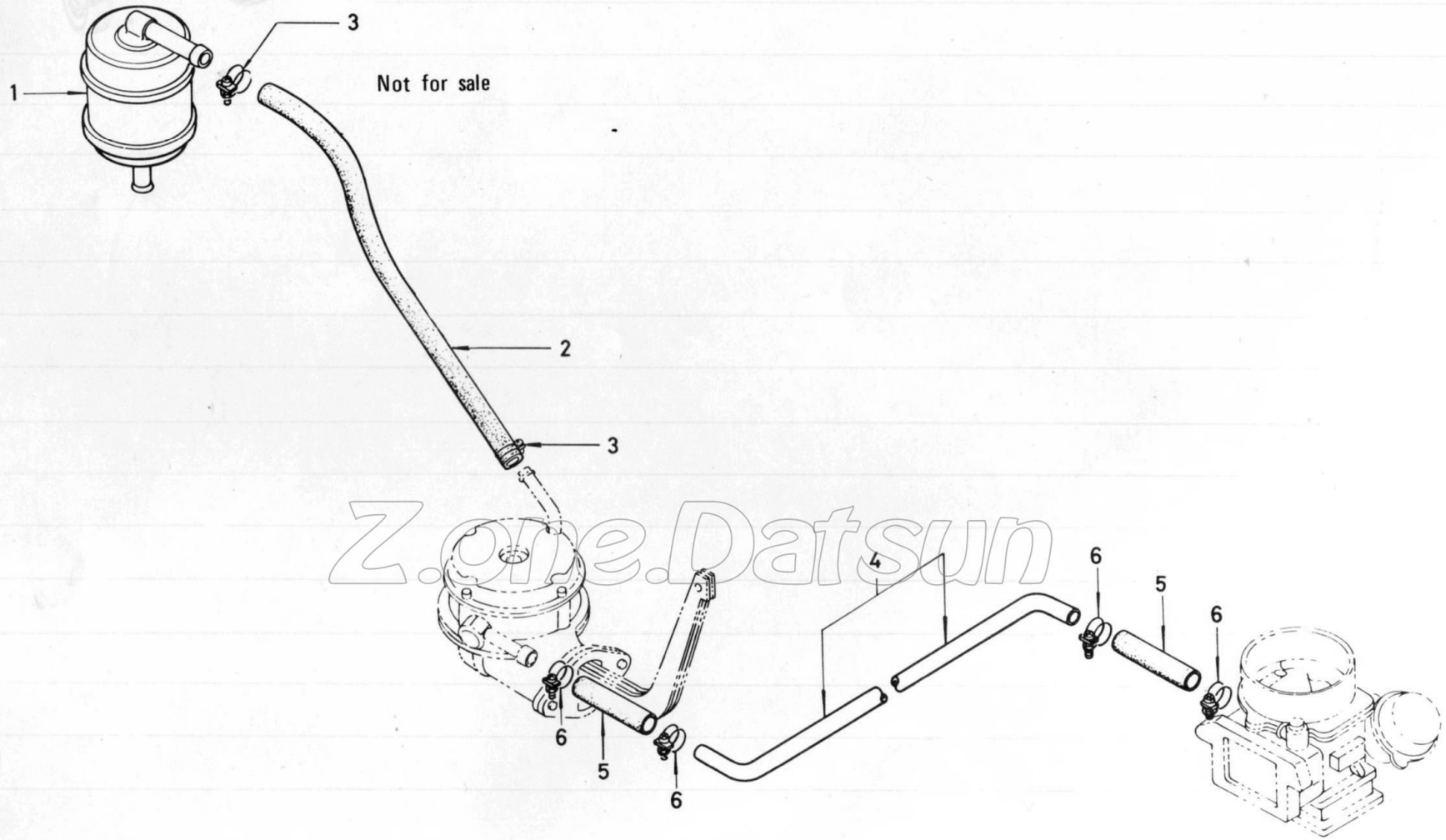

Z.one.Datsun

ILLUSTRATION **18**

© 1973 NISSAN MOTOR CO., LTD.

PRINTED IN JAPAN

NISSAN

FUEL STRAINER & FUEL HOSE (L18)

S	KEY NO.	PART NO.	DESCRIPTION	Q'TY	UNIT PKG FOR DIST.	APPLIED MODEL	APPLIED DATE FROM	APPLIED DATE UP TO	ICA N	ICA F	SUPERSEDED
	101	16400-E3000	ASSY-FUEL STRAINER	1	1	L18					
	201	08742-20020	ASSY-HOSE,FUEL,FUEL STRAINER TOFUEL PUMP	1	5						
	301	16439-22100	CLAMP-HOSE	2	10						
	401	17520-N0200	ASSY-TUBE,FUEL	1	5						
	501	08742-20020	ASSY-HOSE,FUEL,FUEL PUMP TO FUEL TUBE (L=120MM)	2	5						
	601	16439-22100	CLAMP-HOSE	4	10						

NOTE:

PRINTED IN JAPAN

NOTE

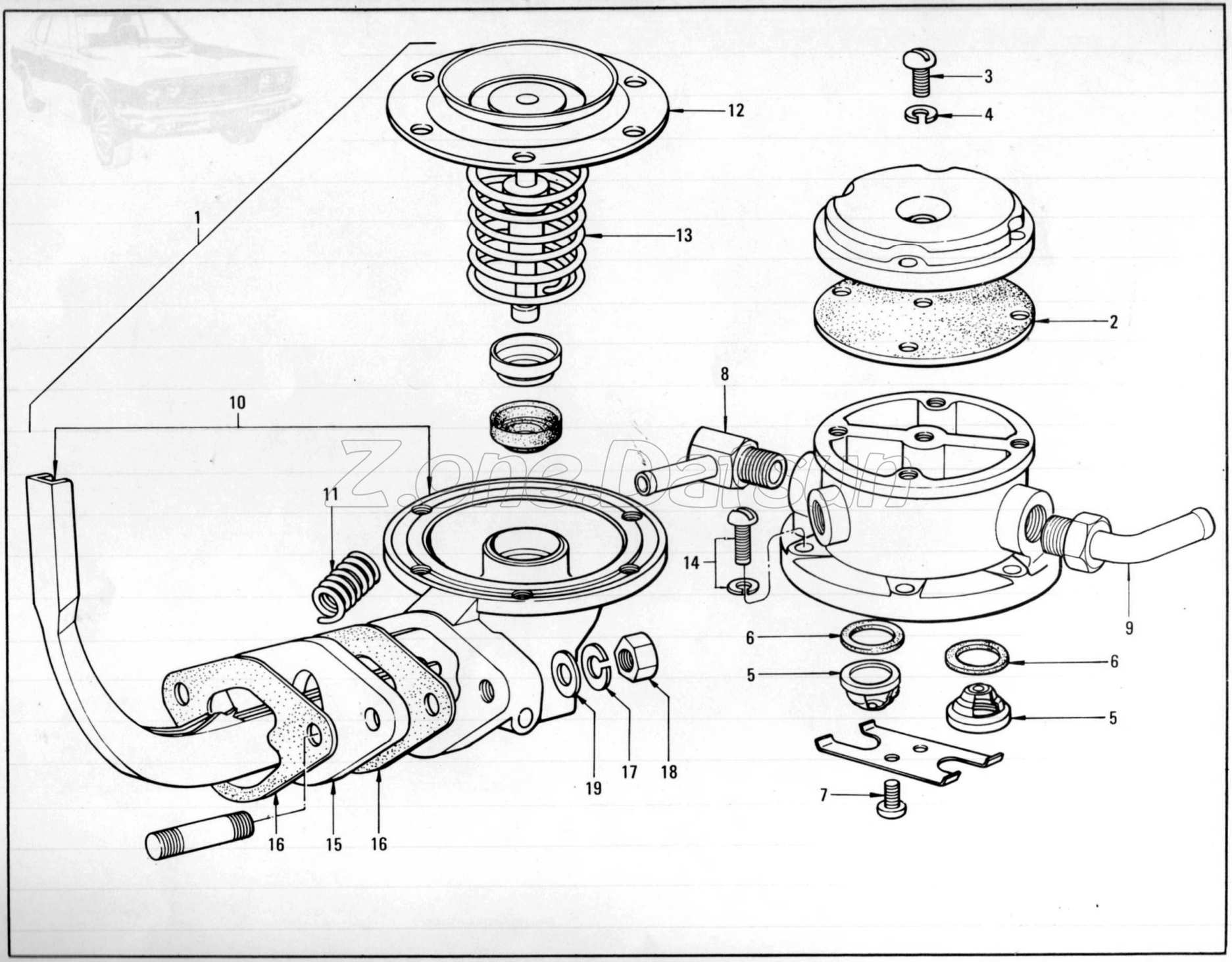

Z.one Datsun

© 1973 NISSAN MOTOR CO., LTD.

REVISED: DECEMBER, 1973

PRINTED IN JAPAN

NISSAN

FUEL PUMP (L18)

S	KEY NO.	PART NO.	DESCRIPTION	Q'TY	UNIT PKG FOR DIST.	APPLIED MODEL	APPLIED DATE FROM	APPLIED DATE UP TO	ICA N	ICA F	SUPERSEDED
	101	17010-H2501	ASSY-PUMP,FUEL (NIKKI)	1	1	L18					
	201	17076-21016	GASKET-BODY COVER	1	5						
	301	08310-51412	SCREW	5	50						
	401	08915-13510	WASHER-LOCK	5	50						
	501	17065-21016	ASSY-VALVE	2	10						
	601	17061-21015	GASKET-VALVE	2	10						
	701	08310-40812	SCREW-RETAINER	2	50						
	801	17103-H2510	ASSY-CONNECTOR,FUEL INLET	1	5						
	901	17103-H2511	ASSY-CONNETOR,FUEL OUTLET	1	5						
	1001	17013-A0601	COMP-BODY,LOWER WITE ARM	1	1						
	1101	17020-21015	SPRING-ROCKER ARM	1	10						
	1201	17053-21017	ASSY-DIAPHRAGM	1	2						
	1301	17052-21016	SPRING-DIAPHRAGM	1	10						
	1401	08310-51612	SET-SCREW	6	50						
	1501	16420-A0600	SPACER-FUEL PUMP	1	5						
	1601	17099-A0600	PACKING-FUEL PUMP	2	10						
	1701	08915-13810	WASHER-LOCK	2	50						
	1801	08911-10810	NUT	2	50						
	1901	00915-41510	WASHER-PLAIN	2	50						

NOTE:

PRINTED IN JAPAN

Note; Key No.1, 2 Assy-water pump
includes Key No.3~6

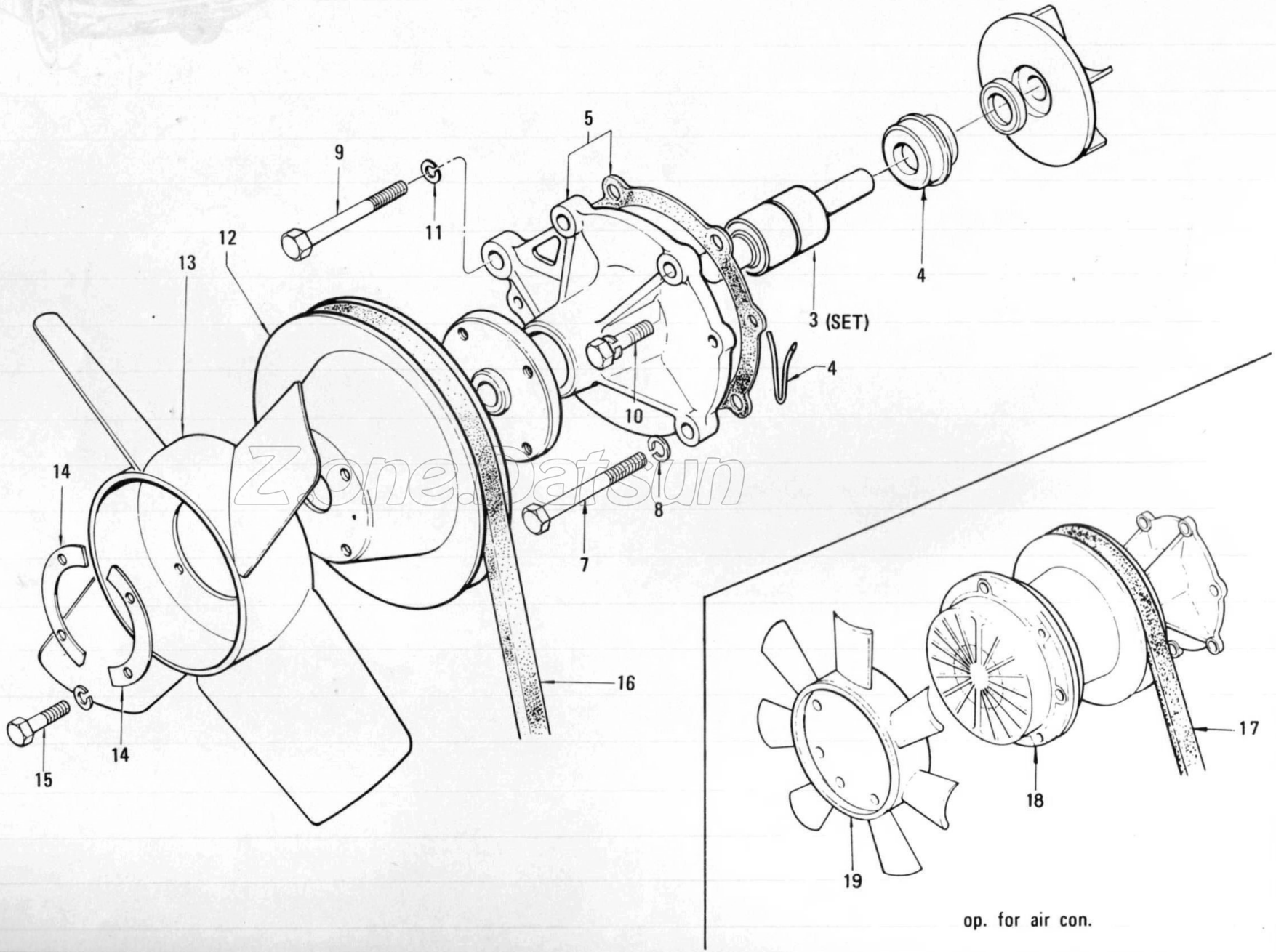

Zone.Datsun

© 1973 NISSAN MOTOR CO., LTD.

REVISED: DECEMBER, 1973

PRINTED IN JAPAN

WATER PUMP (L18)

S	KEY NO.	PART NO.	DESCRIPTION	Q'TY	UNIT PKG FOR DIST.	APPLIED MODEL	APPLIED DATE FROM	APPLIED DATE UP TO	ICA N	ICA F	SUPERSEDED
	101	21010-21026	ASSY-PUMP,WATER	1	1	L18					
	201	21010-23025	ASSY-PUMP,WATER WITH FAN CLUTCH,FOR AIR CON	1	1	OP					
	301	21046-B0700	SET-BEARING,SEAL	1	1						
	401	21047-B0700	SET-SEAL & WIRE	1	1						
	501	21014-21000	GASKET-WATER PUMP TO FRONT COVER	1	10						
*	601	21081-23001	ASSY-CLUTCH FAN,FOR AIR CON	1		OP					
	701	21078-21002	BOLT,L=88MM	2	10						
	801	08915-13810	WASHER-LOCK	2	50						
	901	21079-21002	BOLT,L=85MM	1	10						
	1001	08120-62262	BOLT-WITH WASHE	2	50						
	1101	08915-13610	WASHER-LOCK	1	50						
	1201	21051-21000	PULLEY-FAN,WATER PUMP	1	1						
	1301	21060-A4600	FAN-COOLING	1	1						
	02	21060-23002	FAN-COOLING	1	1	L18(WEST GERMANY)					
	1401	21069-21000	WASHER-LOCK FIXING FAN, PULLEY	2	10						
	1501	08120-62010	BOLT,FIXING FAN,PULLEY	4	50						
	1601	11720-22101	BELT-FAN	1	1						
	1701	11720-U0105	BELT-FAN,FOR AIR CON	1	1	OP					
	02	11720-U0105	BELT-FAN	1	1	L18(WEST GERMANY)					
	1801	21060-23002	ASSY-SPIDER FAN,FOR AIR CON	1	1	OP					
	1901	21090-23000	OIL-SILICO FAN CLUTCH (700 CST 11.5CC)	1	1	OP					

NOTE:

PRINTED IN JAPAN

© 1973 NISSAN MOTOR CO., LTD.

NOTE